NASA-CR-172,332

NASA Contractor Report 172332

NASA-CR-172332
19840014515

Technology Review of Flight Crucial Flight Control Systems

H.A. Rediess and E.C. Buckley

HR Textron Inc.
Systems Engineering Division
Irvine,CA 92714

Contract NAS1-17403

April 1984

LIBRARY COPY

MAY 1 1984

LANGLEY RESEARCH CENTER
LIBRARY, NASA
HAMPTON, VIRGINIA

NASA
National Aeronautics and
Space Administration

Langley Research Center
Hampton, Virginia 23665

NASA Contractor Report 172332

TECHNOLOGY REVIEW

OF

FLIGHT CRUCIAL FLIGHT CONTROL SYSTEMS

APRIL 1984

H. A. Rediess
E. C. Buckley

HR Textron Inc.
Systems Engineering Division
2485 McCabe Way
Irvine, CA 92714

Contract NAS1-17403

National Aeronautics and
Space Administration

Langley Research Center
Hampton, Virginia 23665

N84-22583#

CONTENTS

PAGE

INTRODUCTION..... 1

FLIGHT CONTROL SYSTEMS EVOLUTION..... 2

US AIRCRAFT SYSTEMS..... 3

- CURRENT..... 4
- ADVANCED DEVELOPMENTS.....18

FOREIGN AIRCRAFT SYSTEMS.....34

- CURRENT.....35
- ADVANCED DEVELOPMENTS.....40

TECHNOLOGY TRENDS.....57

- UNITED STATES.....58
- INTEGRATION TECHNOLOGY ASSESSMENTS - UNITED STATES.....64
- UNITED KINGDOM.....67
- FRANCE.....68
- WEST GERMANY.....69
- INTEGRATION TECHNOLOGY ASSESSMENT - FOREIGN.....70

GENERAL OBSERVATIONS & SUMMARY.....71

REFERENCES.....73

BIBLIOGRAPHY.....78

ABBREVIATIONS.....88

INTRODUCTION

A survey of foreign technology in flight crucial flight controls is being conducted for NASA Langley Research Center as a data base for planning future research and technology programs. Free world countries were surveyed with primary emphasis on Western Europe because that is where the most advanced technology resides. The survey includes major contemporary systems on operational aircraft, R&D flight programs, advanced aircraft developments, and major research and technology programs. The survey was not intended to be an in-depth treatment of the technology elements, but rather a study of major trends in systems level technology. The information was collected from open literature, personal communications and a tour of several companies, government organizations and research laboratories in the United Kingdom, France, and the Federal Republic of Germany. This report provides the results of the survey.

Some of the material presented was derived from a briefing to the NASA Administrator by Mr. Kenneth Szalai from Ames Research Center, Dryden Flight Research Facility, on the technology tour of Europe that Mr. Szalai and the Dr. Rediess conducted in 1983, and is used with the permission of Mr. Szalai.

This survey was conducted under contract NAS1-17403 and the Technical Representative of the Contracting Officer was Mr. Cary Spitzer, NASA Langley Research Center. The material presented herein solely represents the findings and opinions of the authors and is not to be construed as being endorsed by the US Government or representatives of the National Aeronautics and Space Administration.

FLIGHT CONTROL SYSTEMS EVOLUTION

Flight controls technology has undergone tremendous evolution over the past three decades. Figure 1 illustrates many of the key milestones in the evolution as represented by major R&D systems and operational systems. The term "non-flight critical fly-by-wire" refers to systems that are commanded by electric or optical signals but loss of those signals is not likely to cause the aircraft to crash. Typically, there is also a mechanical/hydraulic path for primary control or as a backup system. Flight critical fly-by-wire means that loss of that system will unequivocally cause the aircraft to crash.

Although the chart emphasizes US aircraft, several key developments in Europe are included and those of current interest are discussed subsequently. The Concorde had a very profound effect on European flight controls technology in two ways. It represented the first, and as yet only, high authority SAS/CAS in commercial transports and provided a very important experience base for the UK and French technologists and managers. That has helped influence an early commitment to fly-by-wire by Airbus Industries. Secondly, it accelerated the development of the technology in France because the French engineers gained valuable experience working directly with the Marconi engineers on the Concorde system. There is now a solid base of DFBW technology in Europe and widespread commitment to DFBW for military aircraft and, in some cases, commercial transports.

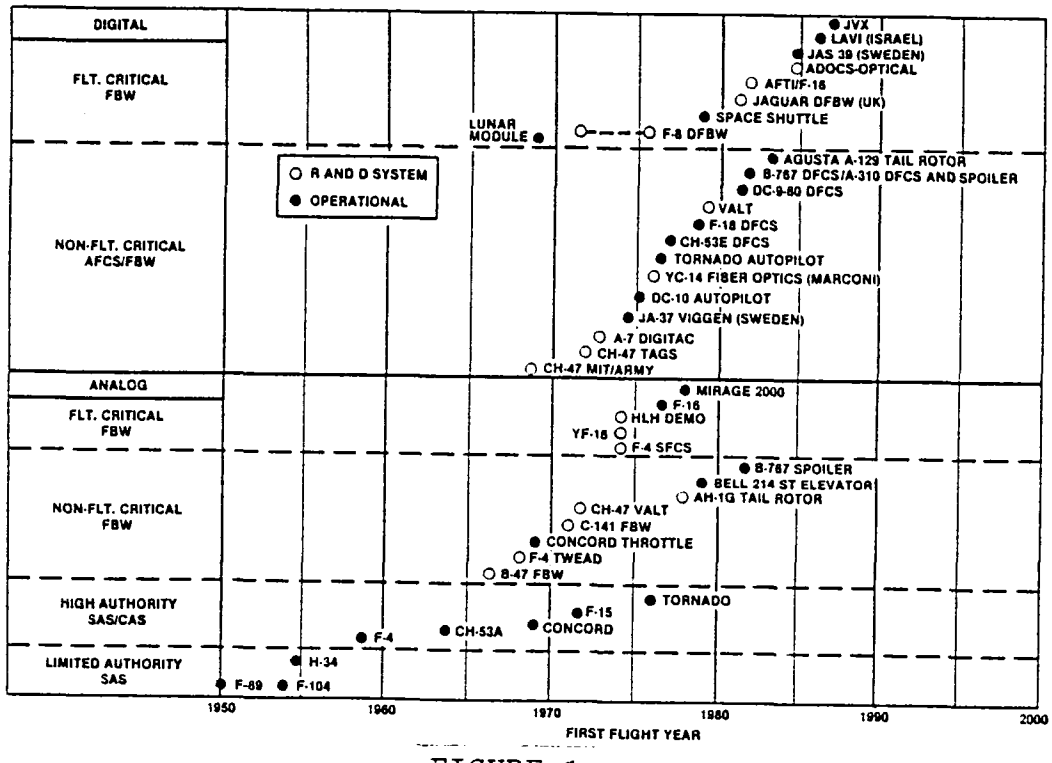

FIGURE 1

U.S. AIRCRAFT SYSTEMS

F-15 AND F-16

Two operational U.S. Air Force fighters shown in Figure 2 are the F-15 Eagle built by McDonnell Douglas and General Dynamics' F-16 Fighting Falcon. The production model F-15s contain a mechanical primary flight control system with a high authority analog command augmentation system. Flight tests are being conducted on an advanced digital flight control system using four digital microprocessors. The system is designed to couple the engines, fire control and navigation systems to provide significant performance improvements without expensive changes to the airplane structure or engines. Features of the R&D system are discussed elsewhere in the report.

The first flight of the F-16 was conducted in 1974. The flight control system is quadruplex analog fly-by-wire (FBW) with no mechanical back-up and features relaxed static stability and envelope limiting (Ref. 1). A four channel digital FBW system has been flight tested and while no official commitment has been made, it is expected that a decision will be made to implement the DFBW system in F-16 C/D models.

Operational Aircraft
US Military

F-15

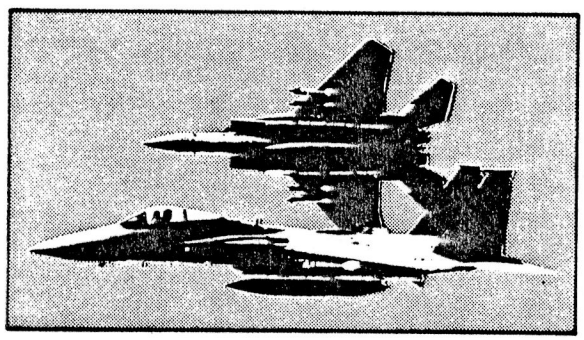

- USAF (McDonnell Douglas)
- First flight 1972
- Mechanical/hydraulic primary flight control
- High authority analog CAS (production), digital CAS in flight test

F-16

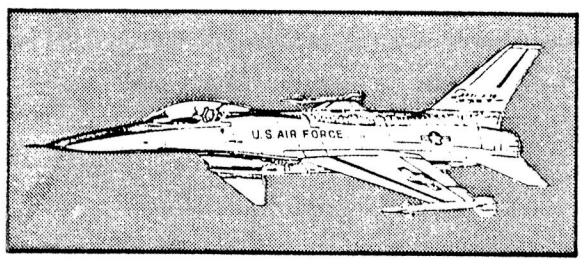

- USAF (General Dynamics)
- First flight 1974
- Quad analog FBW, no mechanical back-up, (quad DFBW flight tested)
- Relaxed static stability, envelope limiting
- Expect F-16 C/D model to convert to DFBW

FIGURE 2

F-18 AND F-20 AIRCRAFT

As shown in Figure 3, two newer military aircraft are the Navy's F-18 Hornet, first flight tested in 1978 and the U.S. Air Force F-20 Tigershark, tested in August 1982. The F-18, built by McDonnell Douglas/Northrop, includes a quadplex digital command augmentation system with a quadruplex analog back-up in roll and yaw control and mechanical back-up on the pitch and roll stabilators.

The F-20, ready for production, was designed by Northrop with the objectives of minimum complexity/cost, low probability of mission abort, and commonality with the F-5A and F-5E vehicles. To accomplish this, the flight control system is an active mechanical system with dual digital control augmentation. This configuration satisfies the objectives and provides fly-by-wire type of performance.

Operational Aircraft
US Military

F-18

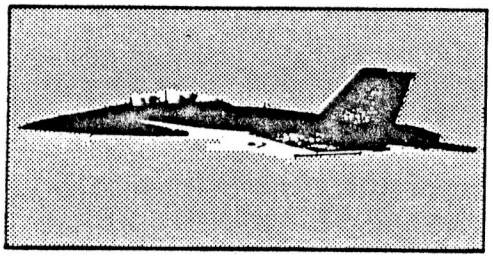

- US Navy/Marines (McDonnell-Douglas/Northrop)
- First flight 1978
- Quad digital CAS, quad analog back-up in roll & yaw control, mechanical back-up on pitch & roll stabilators

F-20

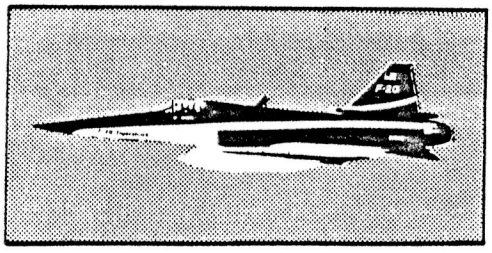

- USAF (Northrop)
- First flight August 1982
- Active mechanical FCS with dual digital control augmentation

FIGURE 3

F-18 FLIGHT CONTROL SYSTEM

The F-18 flight control system is a digitally mechanized quadruplex control-by-wire system providing stability, control and autopilot functions, and interfaces with many of the highly integrated avionic systems through a MIL-STD-1553 multiplex data bus. A functional diagram of the flight control system is shown in Figure 4 (Reference 2). The primary control law computations are performed by four digital computers operating in parallel. Inputs from the cockpit controls and analog motion sensors are used to compute commands for the redundant electrohydraulic servoactuators. Redundancy provides "two-fail-operate" primary control capability. As shown in the diagram, mechanical back-up is provided to the stabilator surfaces for roll and pitch control. Open loop analog roll and yaw control back-up is provided through the aileron and rudder surfaces.

F-18 Flight Control System

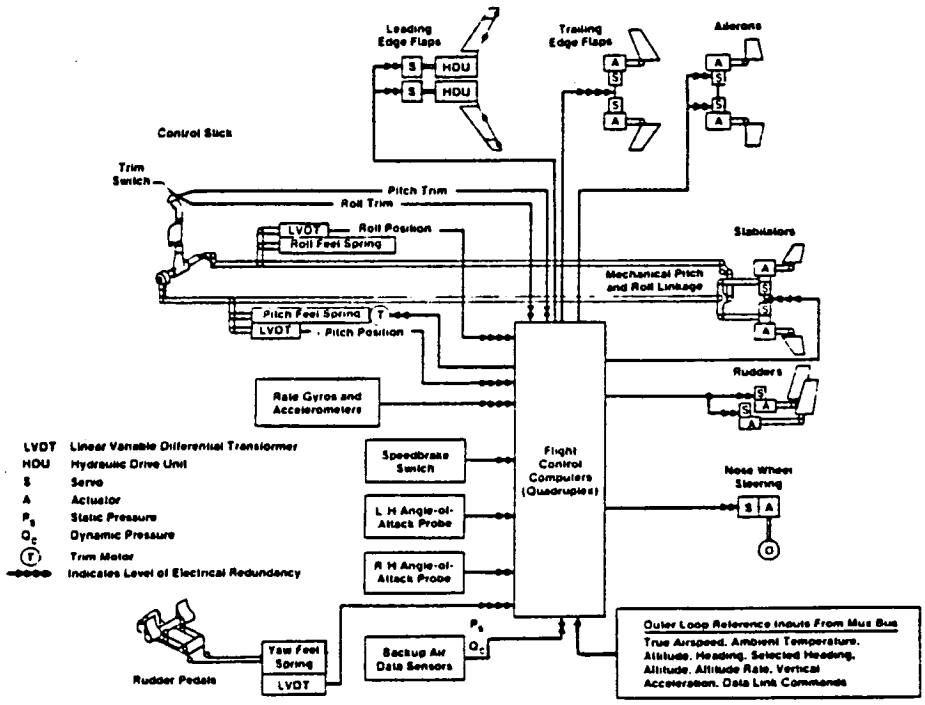

FIGURE 4

The flight control system digitally interfaces with many of the avionic systems using MIL-STD-1553 multiplex data bus as shown in Figure 5. The use of the multiplex bus has substantially reduced the wires required for system integration and has enhanced the aircraft safety by facilitating the inclusion of special displays--the flight control system failure matrix and the spin recovery display. Although originally incorporated for the flight test development, both are currently in the production models as a result of test pilot recommendations. If a control system caution is declared, the failure matrix display can be called upon to provide status information on the major system components. The spin recovery display was designed to operate in conjunction with the spin mode control laws to provide the pilot with recovery information from a spin or an out-of-control maneuver.

F-18 Systems Interfacing

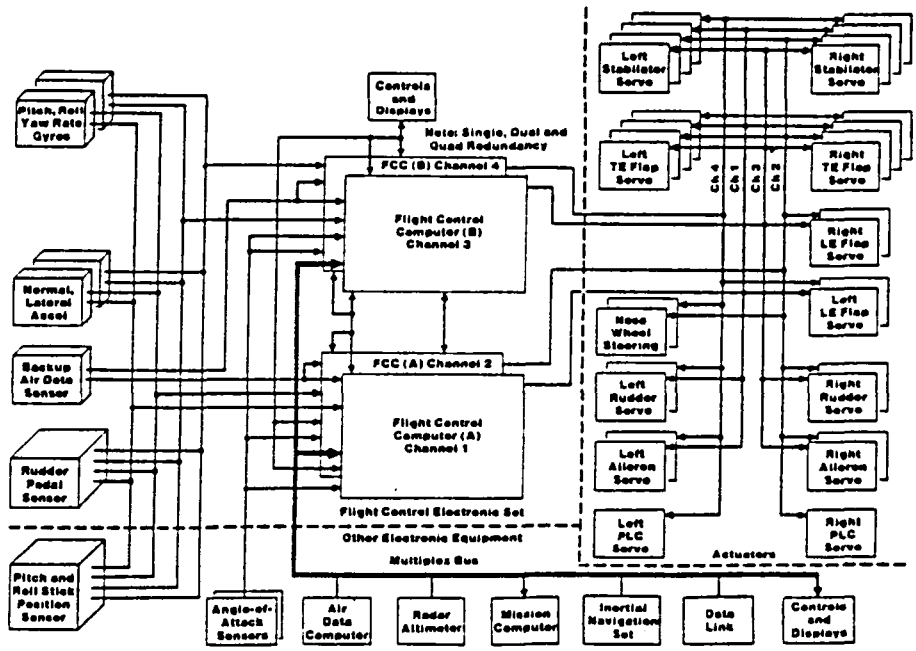

FIGURE 5

F-20 FLIGHT CONTROL SYSTEM

The design objectives for the F-20 flight control systems included requirements for minimizing system cost and complexity, assuring a high level of reliability, and incorporating commonality to the F-5A & E systems to maximize use of parts. The resultant design was an active mechanical system with dual digital control augmentation as outlined in Figure 6. This hybrid approach provides the advantages of digital fly-by-wire with the established safety of mechanical systems. Digital implementation facilitates adaptation to aircraft growth and in-flight system test/fault isolation. (Ref. 3)

F-20 Flight Control System

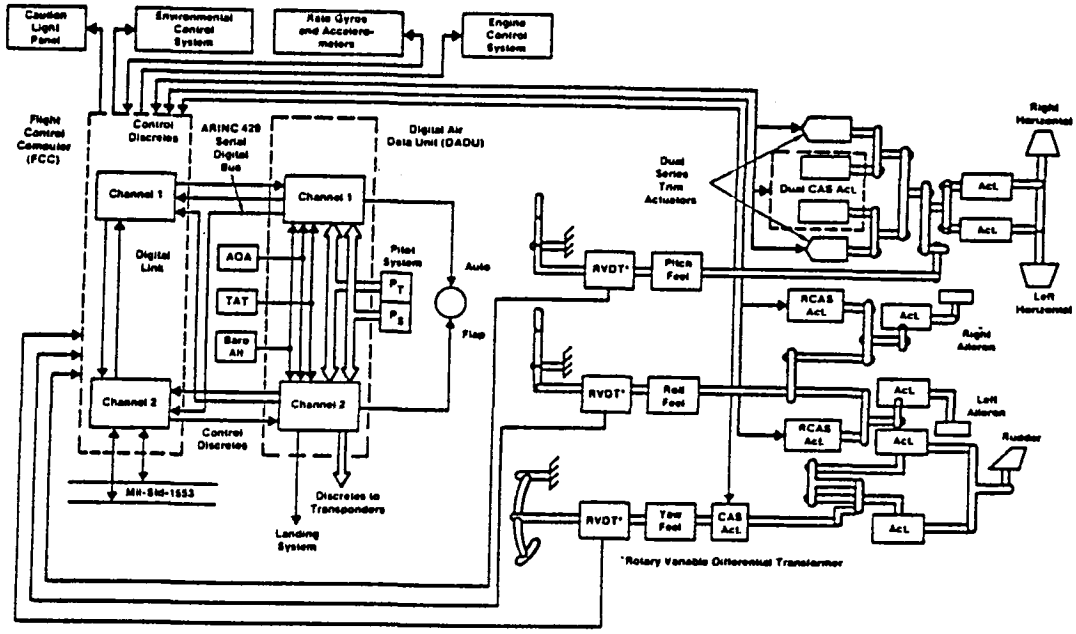

FIGURE 6

B-767/757 AND MD-80

Three operational U.S. transports which utilize the most advanced flight control technology used in the U.S. are the Boeing B-767/757 and the McDonnell-Douglas MD-80, shown in Figure 7. The B-767 and 757, first flight tested in 1981 and 1982 respectively, use a blend of hydromechanical and analog/digital systems for primary and secondary flight control to enhance flying qualities and improve performance. The system includes a digital autopilot and analog fly-by-wire spoilers.

First flight tested in 1981, the MD-80 contains mechanical primary controls and a digital flight guidance system (DFGS) designed by Sperry Flight Systems. The DFGS uses dual digital computers to integrate several automatic functions including automatic landing.

Operational Aircraft
US Commercial Transports

B767/757

- Boeing
- First flights B767 — 1981
  B757 — 1982
- Mechanical primary controls, analog FBW spoilers, digital autopilot

MD-80

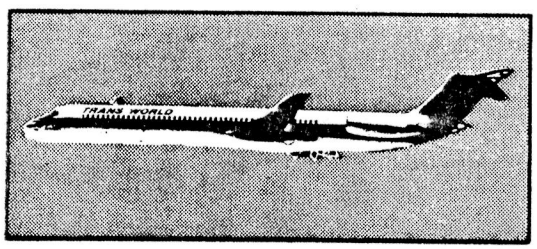

- McDonnell-Douglas
- First flight 1981
- Mechanical primary controls, digital flight guidance system

FIGURE 7

B-767/757 FLIGHT CONTROL SYSTEM

The B-767/757 primary flight control system is comprised of elevators, ailerons, spoilers, rudder and stabilizer along with the high lift leading/trailing edge slats/flaps. The automatic flight control system (shown in Figure 8, Ref. 4), includes triplex digital flight control computers providing autopilot and flight direction functions; dual analog control system electronic units (CSEU); a single digital thrust management computer for autothrottle functions; and, a maintenance control and display panel. The CSEU is a grouping of dispatch critical flight control electronic modules powered by dual switchable power supplies. The CSEU modules provide the following fail-operational functions: yaw damping and turn coordination; mach/speed trim; automatic stabilizer trim; rudder ratio change; elevator asymmetry control (757 only); and fly-by-wire spoiler/speed brake control.

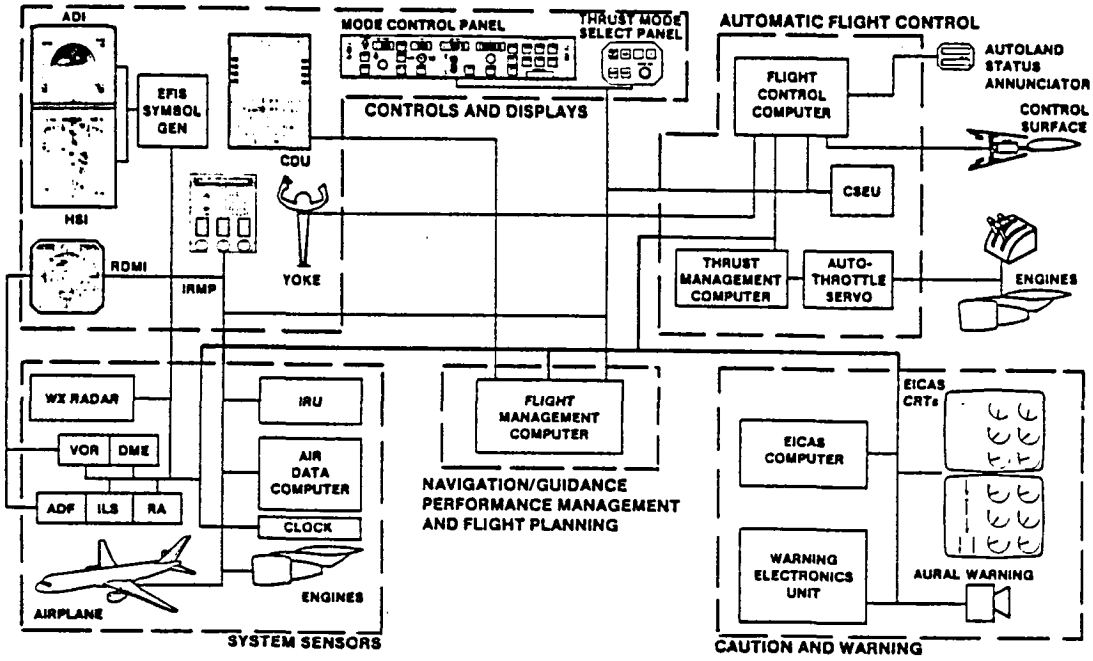

FIGURE 8

MD-80 FLIGHT GUIDANCE SYSTEM

The MD-80 transport utilizes a dual digital flight guidance system (DFGS) outlined in Figure 9. The heart of the system is the digital computers which serve to integrate the various sensor inputs, pilot control panels, electronic aids, and the control functions (Ref. 5). The DFGS includes the following functions:

- Autopilot with CAT IIIa Autoland
- Flight Director
- Autothrottle (Full Flight Regime)
- Thrust Rating
- Speed Command (Take-off and Go-around References)
- Automatic Reserve Thrust
- Yaw Damper
- Mach Trim

MD-80 Flight Guidance System

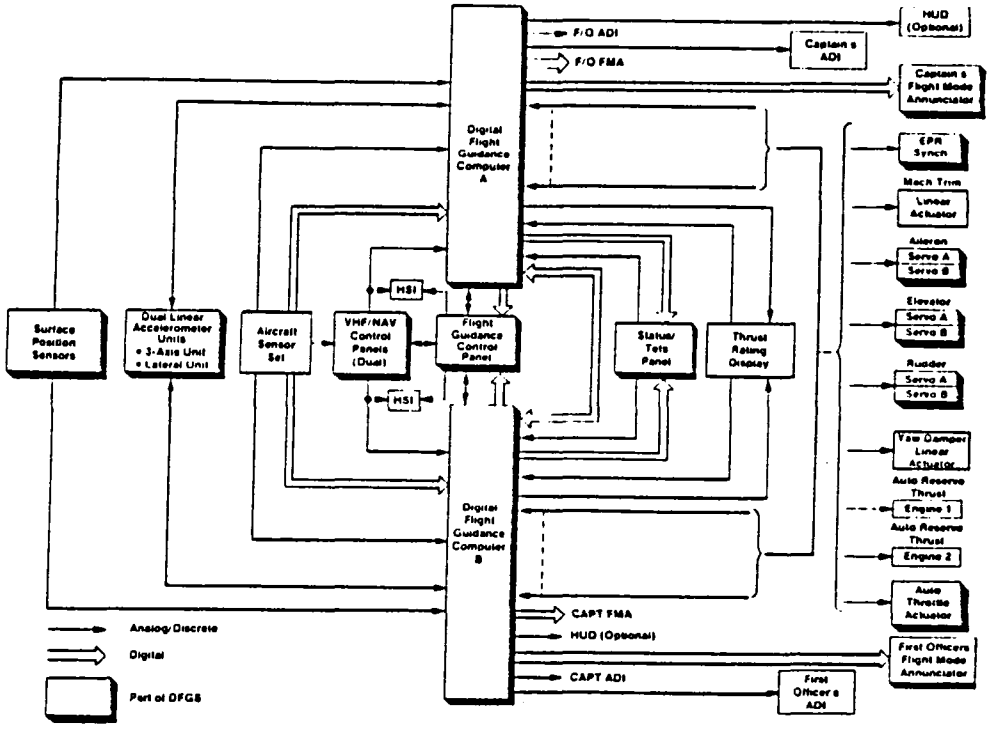

FIGURE 9

SHUTTLE

The first flight of NASA's Space Shuttle vehicle was conducted in 1979 and the first operational flight in April 1981. The Shuttle shown in Figure 10, uses a quadruplex digital fly-by-wire flight control system with no mechanical reversion capability. A fifth digital computer with independently derived software serves as a back-up to protect against generic software errors. The following pages briefly outline the flight control system and redundancy management approach. For more complete information see reference 6.

Operational "Aircraft"

Space Shuttle

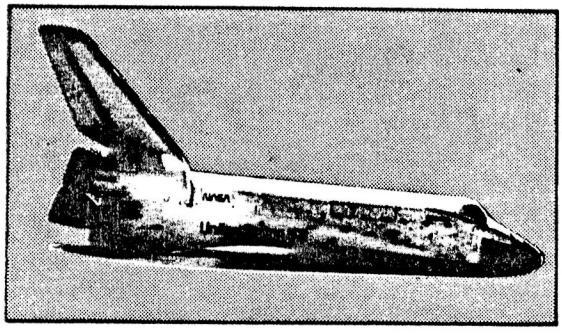

- NASA
- First flight 1979
- Quadruplex DFBW, independent digital back-up, no mechanical reversion
- First and only manned pure DFBW operational "aircraft"

FIGURE 10

SHUTTLE FLIGHT CONTROL SYSTEM

Figure 11 provides a general outline of the Shuttle digital fly-by-wire flight control system (FCS) configuration. The control paths are primarily quadruplex redundant with computers as the heart of the system. A fifth identical computer with independently derived software serves as a back-up system in the event of a generic software error. Any computer has the capability to command/listen to any vehicle subsystem and each assumes it controls the total vehicle. A general FCS configuration is shown in the figure because the effective FCS elements and functions vary with particular mission phases. For example, during the ascent or boost phase, the primary FCS function is to maintain attitude control and stabilization and provide elevon load alleviation as well as structural load alleviation of the mated vehicle. In this phase sensor data is provided by the solid rocket booster and orbiter gyro assemblies and accelerometers. The air data system is not effective nor are the orbiter maneuvering/reaction control systems which are primarily on-orbit control elements. There are seven aerosurface control effectors - dual in/outboard elevons, dual rudder/speed brake, and a body flap. These as well as the aft reaction control system effectors are used during the entry/landing phase.

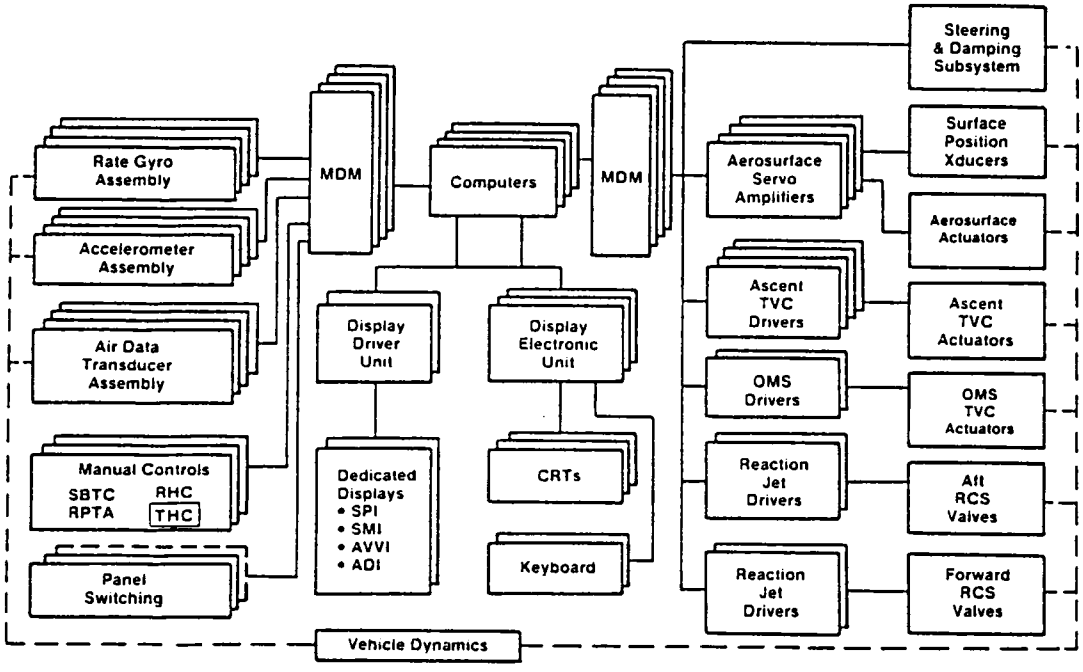

FIGURE 11

SHUTTLE REDUNDANCY APPROACH

The redundancy management process involves selection of a "good" signal, identification of failures, reconfiguration of faulty units by removing them from the redundant set, and communication by alerting the crew. Provisions are included for the crew to enable, inhibit or override a RM action and for automatic reconfiguration and/or selection of redundant subsystems. Figure 12 outlines the redundancy approach. The quadruplex computers are synchronized so that all are operating on the same input data. The selection filter picks the mid-value of three of the four sensor input signals. If only two unfailed signals are available, it takes the average value and if only one, that "good" signal is used. The fault detection unit uses comparison logic to detect, identify, and latch failures. (BITE tests are used if there are insufficient "good" signals to compare.) On the output side, each computer "listens" to all commands and ceases its output if two or more miscompare. The commands are forced summed in the secondary actuators (four pistons) with failures detected and latched in the servoamplifier electronics. The actuation system is designed to provide protection against transients and computer multiplexer/demultiplexer failures.

Shuttle Redundancy Approach

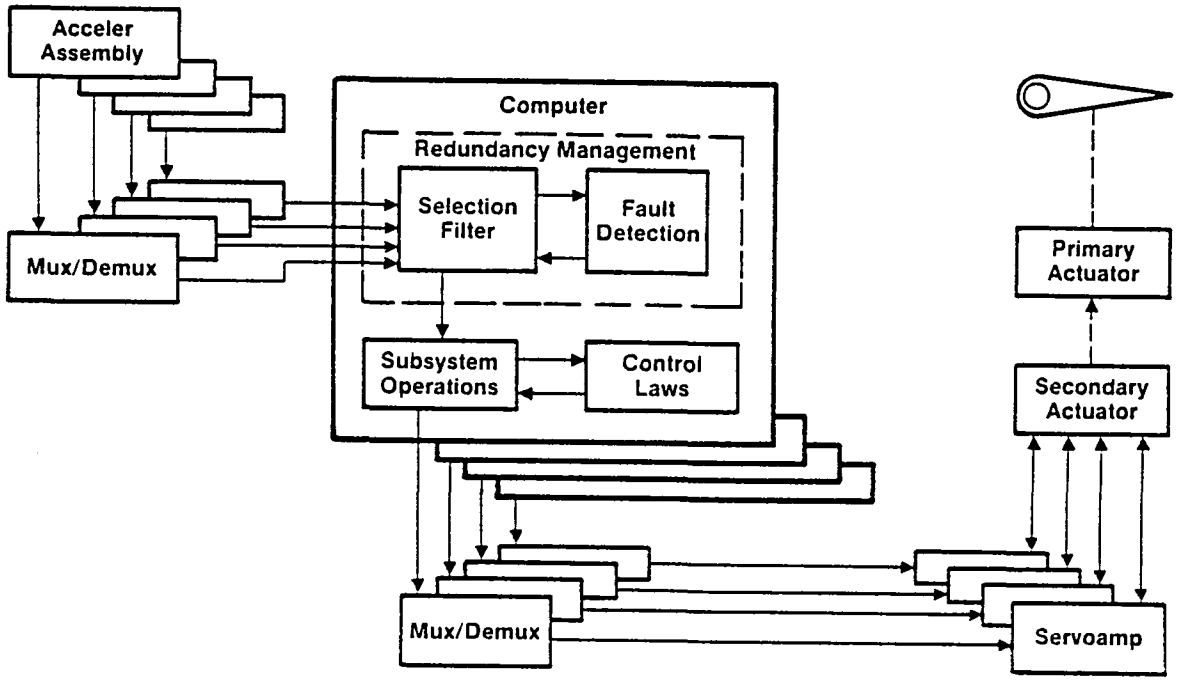

FIGURE 12

ADVANCED FLIGHT CONTROLS FOR BUSINESS/COMMUTER AIRCRAFT

Sperry Flight Systems has developed a fail-operational digital automatic flight control system (DAFCS) which has been selected for installation on the de Havilland Dash-8 and Aerospatiale ATR-42 commuter aircraft (Ref. 7). The system architecture, depicted in Figure 13 and designated the DFZ-800, uses digital technology and interfaces the flight controls, sensors and displays with a bi-directional time multiplexed communications bus. In addition to the bus, the primary system elements are the dual flight computers, guidance control panel, CRT advisory display and actuators. Automatic flight control modes consist of basic autopilot, yaw damper, and Mach trim and by applying fail-operational computation for these functions, the system provides safe operation in all flight regimes.

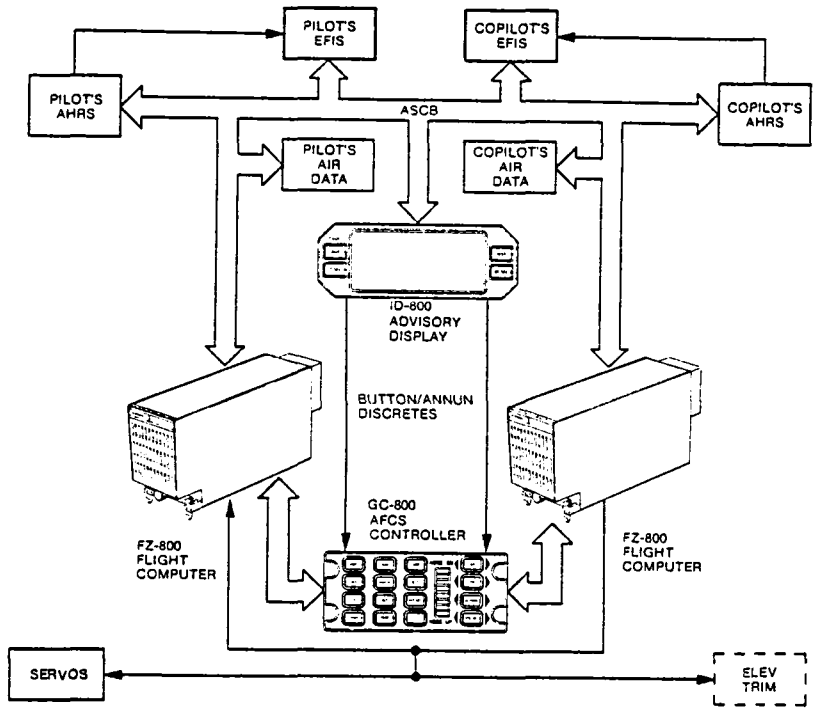

FIGURE 13

CH-53E HELICOPTER

The Sikorsky CH-53E was the first digital automatic flight control system (AFCS) in a production helicopter. Experimental versions of the vehicle contained analog circuitry but reliability, maintenance, and development/ mission flexibility considerations favored a digital implementation which was first flight tested in 1977. While the CH-53E has mechanical primary control, the dual digital AFCS includes the following systems and features: stability augmentation; hover augmentation; a pitch bias actuator system giving the pilot positive longitudinal static stick stability; and a force augmentation system providing longitudinal cyclic stick forces proportional to the maneuvering load factor at speeds above 60 knots. Although the dual digital system is not strictly a flight critical system, it is vital to effective helicopter operations because the unaugmented system is difficult to fly under certain conditions. The autopilot portion of the AFCS controls the long term flight path of the vehicle and satisfies requirements for maintaining pressure altitude, control position (stick trim), attitude heading and air speed. A new version of the vehicle (MH-53E), shown in Figure 14, is currently under test to serve the Navy's airborne mine countermeasure mission. It has a composite tail rotor, sponsons for additional fuel and other special equipment to satisfy mission requirements.

MH-53E

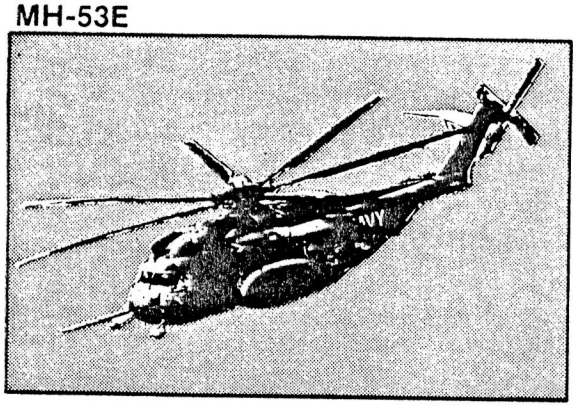

- **US Navy/Marines**
- **First flight 1977 (E-model)**
- **Dual digital AFCS, mechanical primary control**

FIGURE 14

AH-64A HELICOPTER

Pictured in Figure 15, the Army's Advanced Attack Helicopter (AH-64A) is currently in production at Hughes with delivery scheduled to start in February 1984. While utilizing mechanical primary control, the flight control system features several pilot aids to reduce pilot work-load. These include three-axis short period stability augmentation (SAS), three-axis maneuvering stability command augmentation (CAS), two-axis long-period attitude hold, artificial feel in the longitudinal axis, turn coordination, flap control and a four axis fly-by-wire back-up control system built by Sperry Flight Systems. While unusual for a helicopter, the AH-64A has full-span flaps in small fixed wings attached to the fuselage. The stub wings are needed for mounting external stores but carry the disadvantage of generating lift and, thus, absorbing part of the energy that could be (and during autorotation needs to be) stored in the main rotor. To circumvent this, the flaps automatically deflect upwards during autorotation acting like spoilers to destroy lift and deflect downwards like conventional flaps during maneuvering operations to unload the main rotor and avoid over-stressing it.

AH-64A

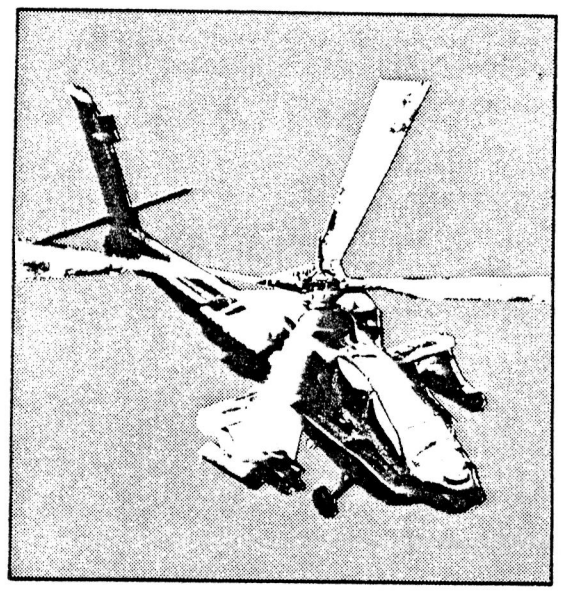

- **US Army (Hughes)**
- **In production (delivery early 1984)**
- **Mechanical primary control, three axis CAS/SAS, four axis FBW back-up control**

FIGURE 15

YC-14 STOL

The YC-14 prototype aircraft shown in Figure 16, was built by Boeing for the USAF and first flight tested in 1976. It featured dual engines, full fly-by-wire USB flaps for powered lift by the coanda effect (i.e., engine efflux passing over the USB flaps), a digital flight control systems designed by Marconi, and an optical data link. The YC-14 has a major significance in flight controls technology because of the early application of an optical data link. As is described elsewhere in the report, Japan is developing a commercial STOL based on some of the technology applied to the YC-14. Therefore, some of the YC-14 system configurations are outlined here.

Figure 17, on the next page, outlines various YC-14 system configurations (Ref. 8). The upper left block of the figure delineates those control surfaces commanded by the digital flight control system (DFCS) which is designed to provide good handling qualities under short take-off and landing (STOL) operations when much of the lift is generated by the coanda effect. Except for the USB flaps which are full fly-by-wire, all control surfaces can be mechanically operated to facilitate conventional flight and landing in the event of DFCS failure.

Experimental STOL

YC-14

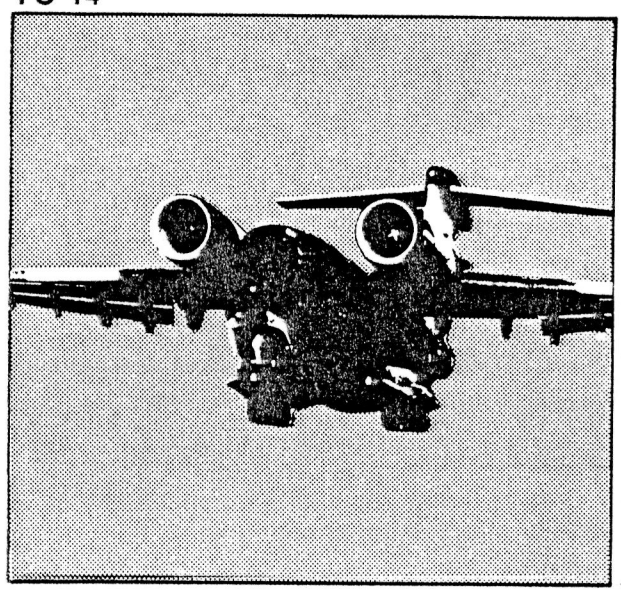

- USAF (Boeing)
- Prototype Aircraft
- First flight 1976
- Triplex DFCS
  - USB flap full FBW
  - Mechanical back-up all surfaces except USB flap
- Fiber optics interlane communications

FIGURE 16

The diagram in the upper right depicts the triplex sensor data consolidation process. Each sensor output is coupled to the other channels so that each computer has data from each of the sensors. Identical algorithms in each computer consolidate the data enabling equalization and fault detection/isolation of the inputs. The computers are synchronized to avoid sampling time differences and to assure all computers are receiving identical data inputs. Optical coupling was selected to maintain inter-channel integrity. This communication medium eliminates electromagnetic interference effects, electrical grounding loop problems, and the potential propagation of electrical malfunctions between channels.

The heart of the flight control system is the triplex digital computers and associated interface units. The system provides three axis autostabilization including control wheel steering operating in conjunction with the pitch and roll attitude loops and STOL speed hold which controls both the throttle and USB flap positions. The aircraft has excellent engine-out performance. The flight control system automatically compensates for an engine failure by retrimming the wing flaps to improve lift/drag ratio. Even without this automatic retrim, the system allows normal landing following an engine failure.

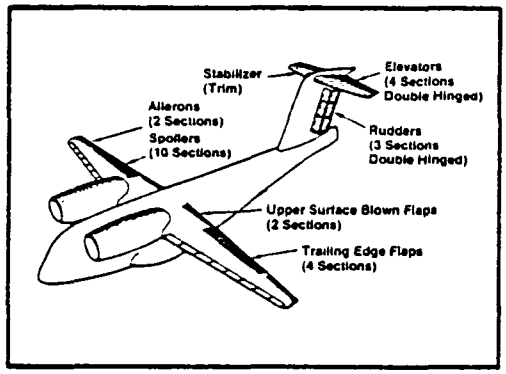

Control Surfaces

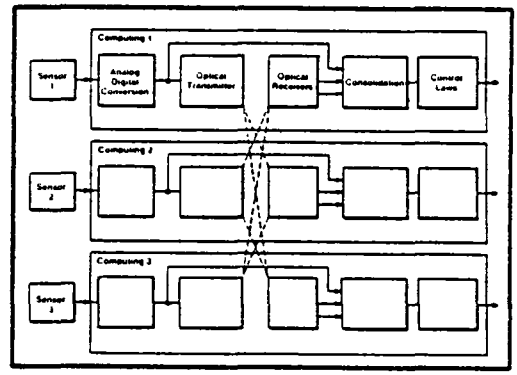

Sensor Data Consolidation

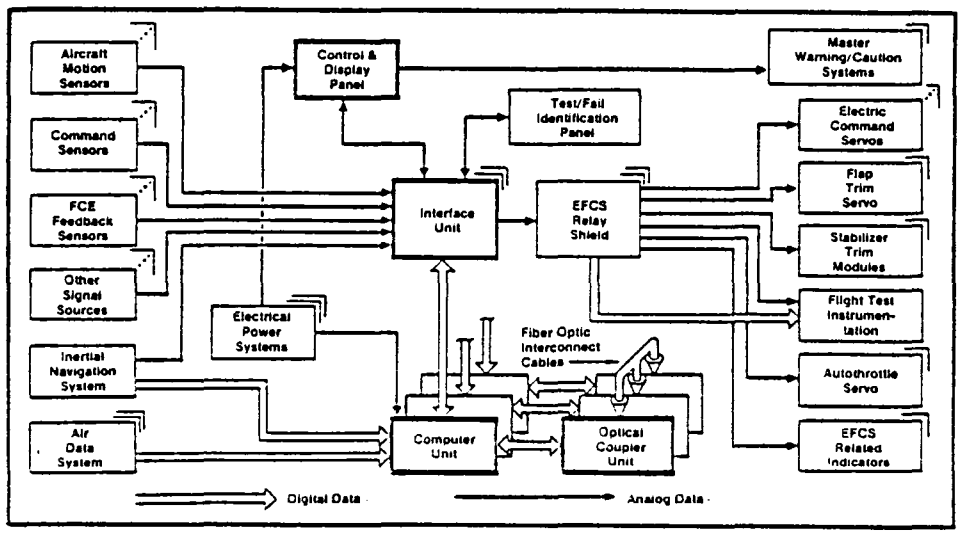

Flight Control

FIGURE 17

ADVANCED DIGITAL OPTICAL CONTROL SYSTEM (ADOCS)

As a logical progression of digital fly-by-wire technology, the US Army Applied Technology Laboratory, Ft. Eustis, Virginia, has undertaken the engineering development of a digital fly-by-light (FBL) flight control system for helicopter applications. The FBL provides a medium to enhance survivability of aircraft under battlefield environments and thus improve mission capability. In addition, the use of passive optical systems impervious to electrical interference, could negate the requirement for back-up controls with attendant savings in weight/cost and increase in systems reliability.

The initial phase (1980-1982) of the ADOCS technology program was devoted to the development of optical control system components and conceptual system designs. The second phase (1982-1986) involves a flight demonstration of a redundant ADOCS system using a UH-60A helicopter. (See Figure 18) The initial flight test is scheduled for late 1984.

R & D Flight Programs

ADOCS

- US Army (Boeing Vertol)
- Demonstration using UH-60
- First flight 1984
- Dual triplex DFBL
- Mechanical reversion
- Optical signaling

FIGURE 18

ADOCS FLIGHT CONTROL SYSTEM

A simplified block diagram of the ADOCS flight control configuration is shown in Figure 19. The architecture uses separated primary (PFCS) and automatic flight control systems (AFCS). The PFCS provides the flight safety reliability and consists of the pilot/copilot controllers, dual digital processors and control actuators connected by optical fibers. Each of the triplex channels is able to detect its own failure through in-line (self) monitoring producing a dual fail-operational level of redundancy. This configuration eliminates computer interactions and decision-making software; and, in contrast with quadruplex systems using interchannel voting for failure detection, also eliminates failure propagation between channels. The AFCS provides stability/control augmentation and automatic mode selection. It consists of a single microprocessor in each PFCS complex, which is cross-channel comparison monitored for fail-operational, fail-safe redundancy. The dual integrated control actuators include an electronic module which converts optical commands from the processor into electrical signals to control a conventional tandem servo valve. The actuators operate from a dual hydraulic supply containing a stand-by back-up. Reference 9 defines some of the reliability and maintainability issues involved in ADOCS.

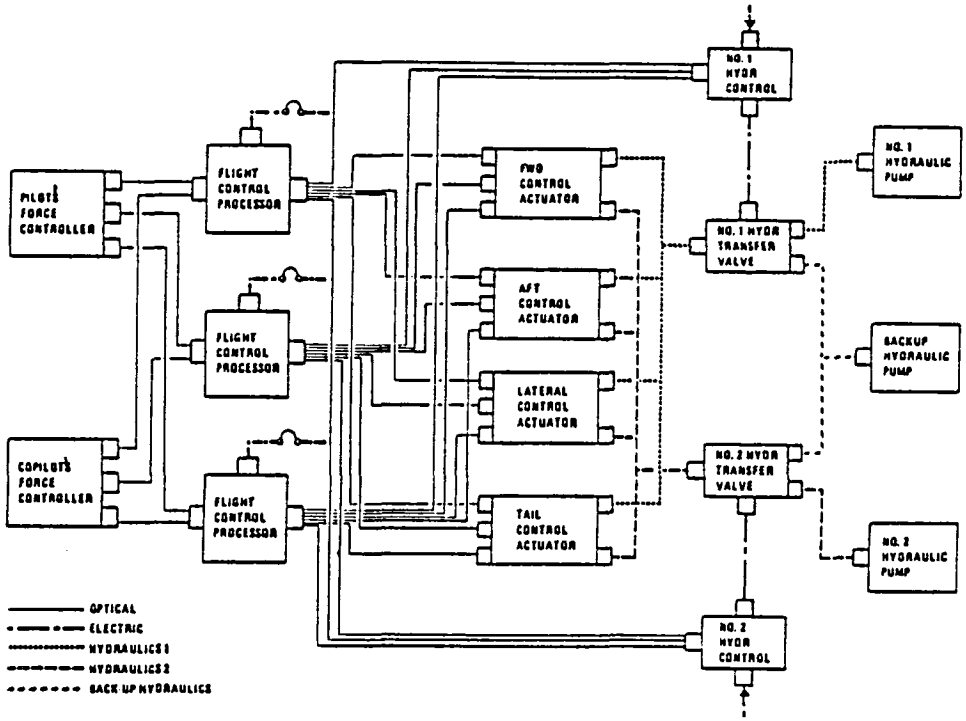

FIGURE 19

MILITARY ADVANCED ROTORCRAFT DEVELOPMENTS

The U.S. military has two major programs defined for advanced rotorcraft development - the JVX and LHX (see Figure 20). The JVX is a joint services development to provide a high performance multi-mission vertical lift aircraft. Built by a team of Bell Helicopter Textron (BHT) and Boeing Vertol, the vehicle is based on Bell's XV-15 tilt rotor and is scheduled for initial flight in 1987. The flight control system involving Honeywell will use digital fly-by-light technology based on ADOCS concepts and contain no mechanical back-up mode. Civil applications of the JVX design have been initiated. BHT has a preliminary design featuring a forward canard which increases efficiency by allowing lower gross weight.

The Army LHX program is focused on developing a standardized family of light helicopters to replace many of the scout, attack, and utility vehicles currently in service. While the program is still in the definition stage, the figure indicates some of the replacement considerations. Replacements would be made starting in the early 1990s and continuing beyond the year 2000. The family of helicopters would comprise common components such as engines, rotors, drive trains, and core avionics in different airframe packages.

JVX

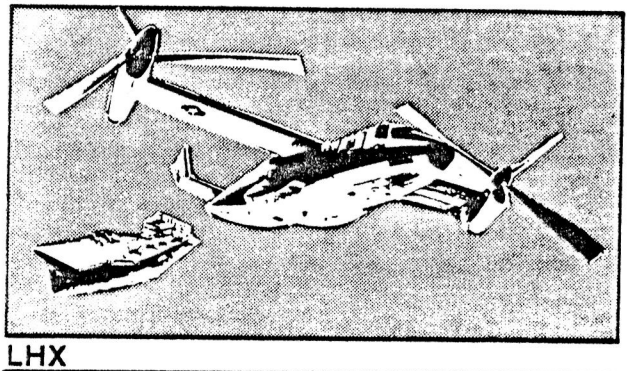

- US joint services (Bell/ Boeing Vertol)
- Advanced multimission vertical lift vehicle
- First flight 1987
- DFBL (Honeywell) based on ADOCS concepts, no mechancial back-up

LHX

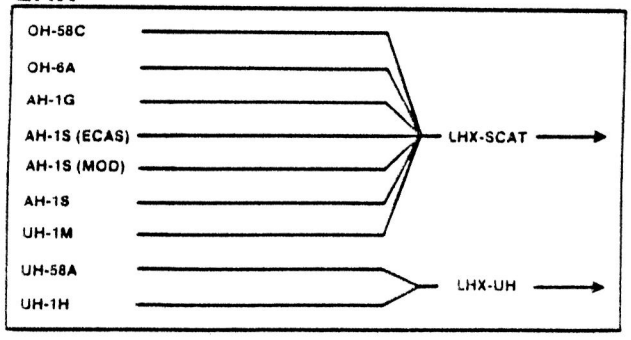

- US Army
- Light, high performance, standardized helicopter
- First flight 1989
- FCS to be based on ADOCS (triplex DFBL) with some augmentation
- Single pilot operation desired

FIGURE 20

LHX PLANS

The Army intends to rely heavily on the ADOCS technology currently being developed/evaluated and, thus, the LHX flight control system will likely be a multi-redundant digital fly-by-wire/light with some augmentation. Some of the contractor proposed vehicle concepts are shown in Figure 21. A formal definition phase of LHX will lead to a competitive development phase in 1987, first flights in 1989, and initial deliveries in about 1993. In conjunction with this effort, an advanced rotorcraft technology integration (ARTI) program will be conducted over a three year period beginning in 1984 to provide data on the feasibility of a single-pilot configuration which is desired for LHX. Because of the relationship between programs, ARTI has been divided into two phases to accommodate critical LHX decisions. Phase I, to be completed in 1985, will address cockpit and architecture concepts to allow preparation of an LHX system specification for a 1987 development initiation. The second phase of ARTI will include flight demonstrations of candidate technologies in LHX surrogate vehicles. Additional information on this ARTI program follows.

LHX Vehicle Concepts

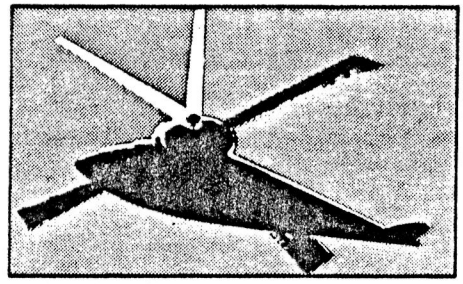

Boeing Vertol — Integrated Technology Rotor

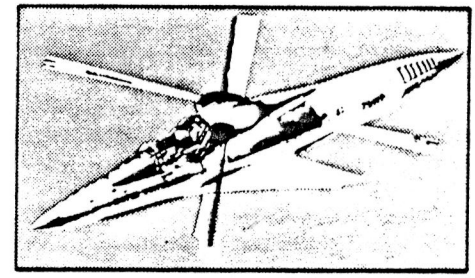

Hughes — Tailless Rotor

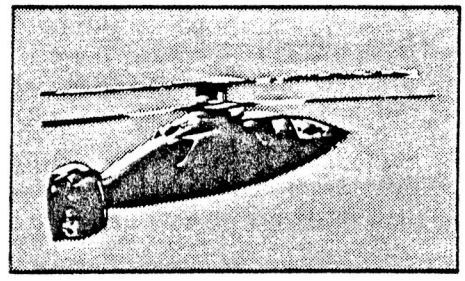

Sikorsky — Advancing Blade Concept

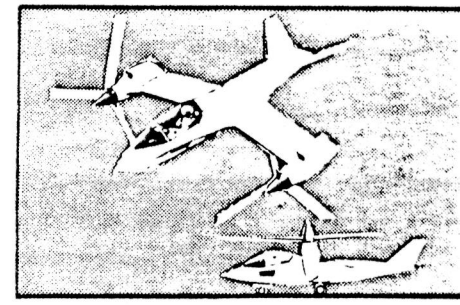

Bell — Tilt Rotor

FIGURE 21

ADVANCED ROTORCRAFT INTEGRATION PROGRAM (ARTI)

Five industry teams have been awarded contracts under the ARTI program which is aimed at studying technology applicable to single-piloted operations and which leads to the LHX program. Those receiving contracts were: Bell Helicopter Textron; Boeing Vertol; Hughes Helicopter; IBM; and Sikorsky. Each of the contractors and associated teams will conduct investigations of advanced automated cockpit concepts and the feasibility of single pilot operations. Shown in Figure 22, is an ADOCS demonstrator and a modified Sikorsky S-76 helicopter which are representations of the vehicles to be used in the ARTI task. Attached to the forward fuselage of the S-76, is a single pilot cockpit which will incorporate a fly-by-wire system for evaluating multiaxis side-arm controllers and various displays. Several manufacturers have already conducted preliminary tests of multiaxis controller applicability to single pilot operations using a Canadian government research helicopter -- a modified variable stability BELL 205A-1.

Army ADOCS

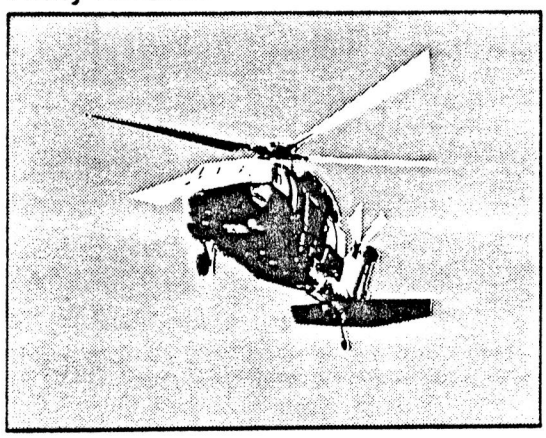

Sikorsky Modified S-76

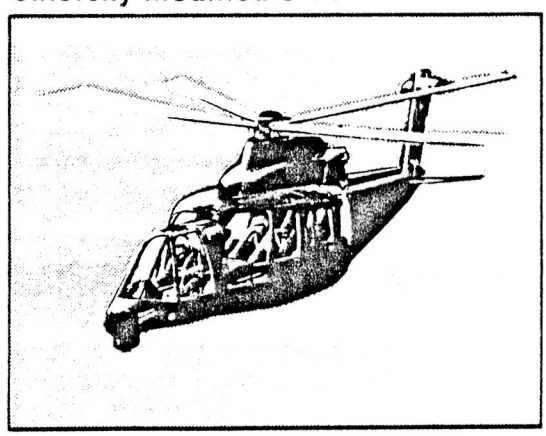

FIGURE 22

ADVANCED HELICOPTER IMPROVEMENT PROGRAM (AHIP)

The U.S. is currently upgrading an advanced scout helicopter under the AHIP. Bell Helicopter Textron is modifying OH-58A vehicles (newly designated Model 406) with modern, high technology systems to enhance the overall effectiveness (Figure 23 shows a test aircraft). Under subcontract, McDonnell Douglas/Northrop is providing a mast-mounted sight for acquiring, detecting, identifying, and designating targets at standoff ranges which improves survivability. An integrated control display system (Sperry) will provide a flexible man/machine interface for reduced workload, improved efficiency, and enhanced mission effectiveness. The upgraded vehicle includes hydraulic boosted flight controls combined with a 3-axis stability and control augmentation system with heading hold for stable, smooth flying qualities. Built-in test features assure that the pitch and roll channels fail passively; one yaw channel operates after a single failure, and the yaw channels fail passively after a dual failure.

AHIP Program

Demonstrator Aircraft

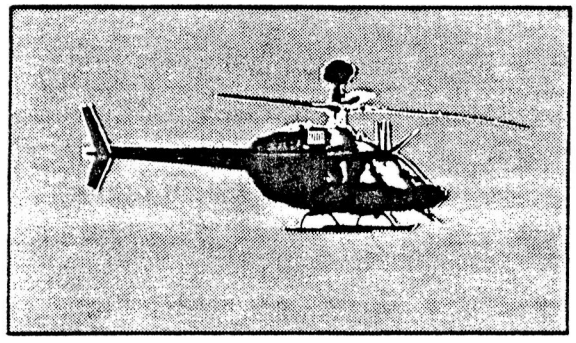

- **Upgraded OH-58A scout helicopters (Bell/Helicopter Textron)**
- **Three-axis digital SCAS**
- **Integrated cockpit/color CRT displays**
- **Advanced target detector/ tracker mast mounted sight**
- **Deliveries in 1984**

FIGURE 23

F-15 INTEGRATED FLIGHT/FIRE CONTROL

The USAF Flight Dynamics Lab has sponsored an advanced development program to design and evaluate an integrated flight and fire control (IFFC) system to improve weapon delivery effectiveness. The overall program comprised two contractual efforts - IFFC performed by McDonnell and FIREFLY by General Electric. The IFFC portion provided for the flight/fire control coupling, flight control system modifications and overall systems integration. The FIREFLY provided the sensor/tracker data processing and the use of target data to implement a director fire control system. As shown in the overall system block diagram (Figure 24) three equipments were modified and six added to the baseline F-15 aircraft. The control computer (CC) was modified to communicate with the new systems using an added MIL-STD-1553A multiplex bus and to interact with the Head Up Display (HUD). The control augmentation system was modified to provide responses for the weapon delivery system and to handle additional safety features. The heart of the IFFC system is the coupler interface system (CIU), a digital computer serving as the main control unit. The ATLIS II is an electro-optical imagery tracker with laser ranging capability. (Ref. 10)

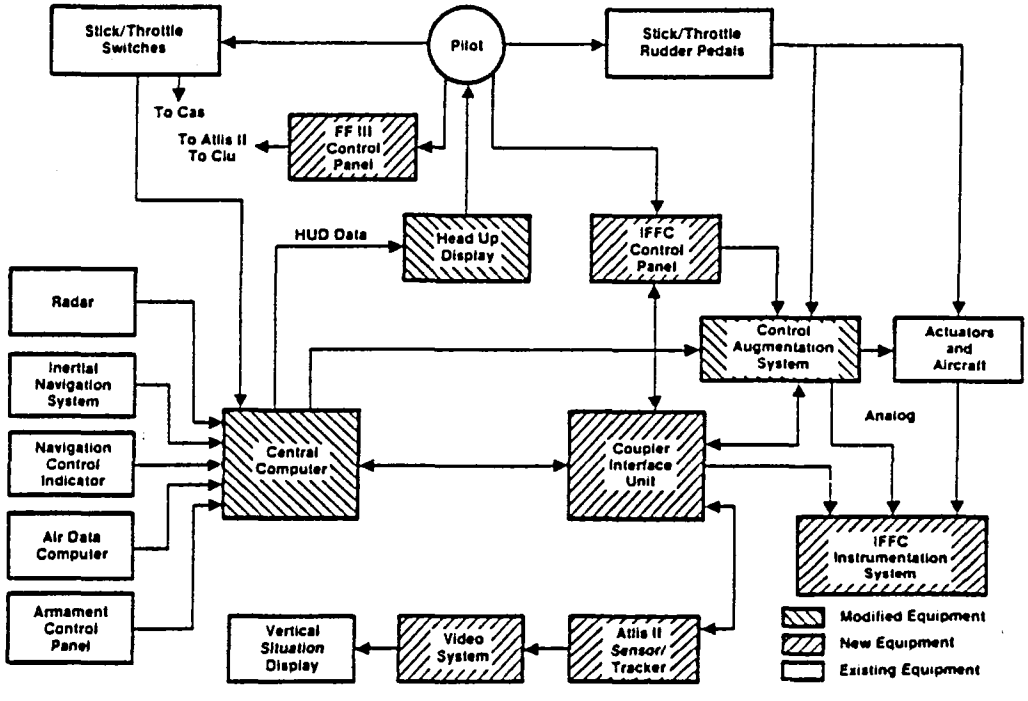

FIGURE 24

AFTI/F-16 AND X-29A

Two current R&D flight programs pursuing advanced technology development are the AFTI/F-16 and X-29A shown in Figure 25. The Advanced Fighter Technology Integration, AFTI/F-16, program under prime contract to General Dynamics is a joint USAF/NASA/USN task for developing and flight validating advanced technologies to improve fighter combat effectiveness. The program is being accomplished in two phases. The first phase (1982-83) addresses core technology development, primarily a triplex digital fly-by-wire system with a dual fail-operate capability; but including decoupled flight control and integration of avionics, cockpit displays and flight controls. Phase II (1984-85) will exploit the core technologies to demonstrate mission performance improvements through task automation. Specifically, using the medium of software, the attack sensors, flight control, fire control, cockpit systems and weapons interface will be integrated into an Automated Maneuvering Attack System.

The X-29A is a joint DARPA, NASA, USAF task under contract to Grumman. It features a forward swept wing using a design offering the promise of a new generation of tactical aircraft that are smaller, lighter, less costly and more efficient than contemporary fighters. The flight controls are configured as a triplex redundant digital fly-by-wire system with no mechanical reversion, but containing a triplex analog back-up.

AFTI/F-16

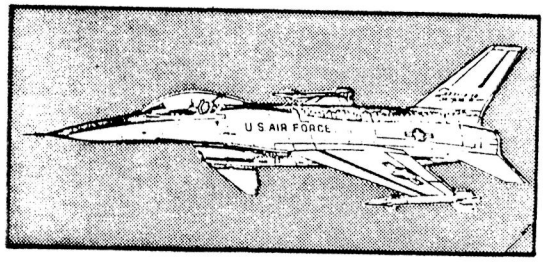

- **USAF/Navy/NASA (General Dynamics)**
- **First flight 1982**
- **Triplex self monitored DFBW, analog back-up but no mechancial reversion, side stick controller**
- **ACT: RSS, direct lift/side force, flat turn, fuselage aiming**

X-29A

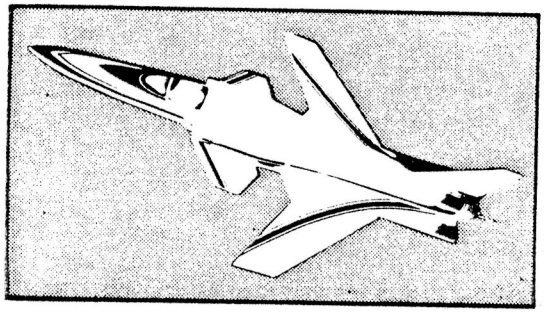

- **DARPA/USAF/NASA (Grumman)**
- **First flight 1984**
- **Triplex DFBW, analog computer back-up, no mechanical reversion**

FIGURE 25

AFTI/F-16 FLIGHT CONTROL SYSTEM

The flight control system, Figure 26, is a triplex digital fly-by-wire configuration and is the prime element in achieving the integrated technology goals of the AFTI/F-16 program. The system consists of flight control computers, an actuator interface unit, flight control panel and associated sensors, pilot controllers and displays. The digital computers operate synchronously and include an independent analog back-up considered necessary to protect against generic software errors and preferred over mechanical systems requiring the addition of hydromechanical hardware. To achieve improved aircraft survivability and optimum performance for specific tasks, the control law design includes mission specific and decoupled control modes providing such options as flat turn, direct lift and pointing. (Ref. 11)

AFTI/F-16 Flight Control System

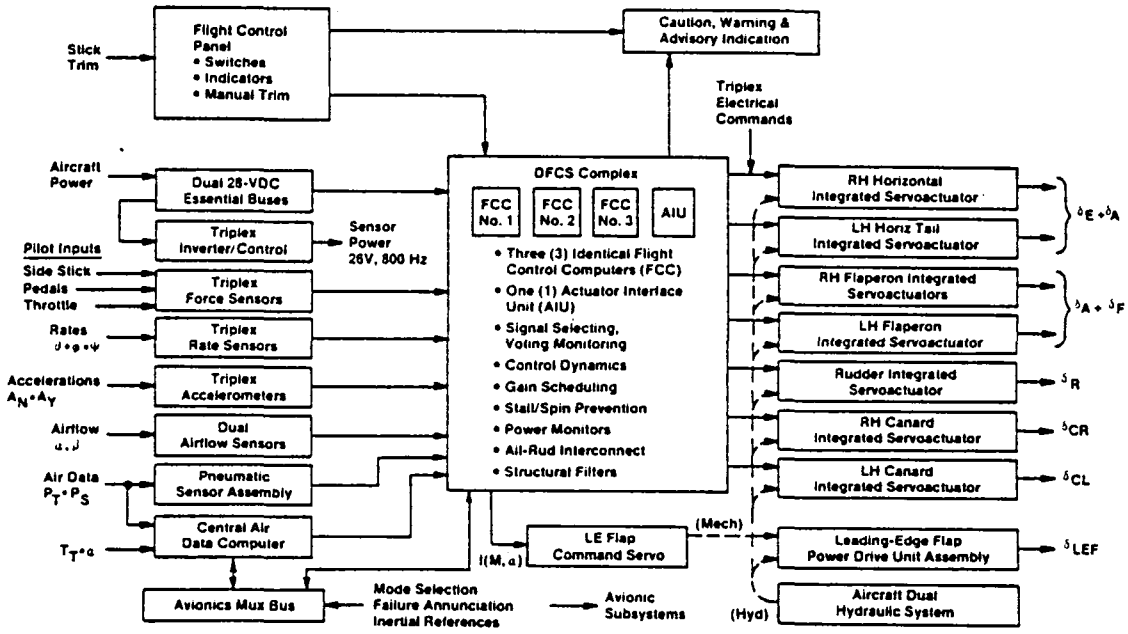

FIGURE 26

A major objective of the AFTI program is the provision of dual-fail operate capability in a triplex system which requires determining the "good" channel when only two remain and they do not agree. The AFTI system uses both cross-channel comparison and in-line or self monitoring for fault tolerance. (See Figure 27) After a first failure, determined by comparison monitoring, the system operates on the remaining two branches. A second "like" failure is also detected by comparison monitoring and an in-line self test is indicated to determine the remaining single "good" channel. If the self test is inclusive and sensor failures are involved, control law reconfiguration is initiated whereby a synthesized sensor or zero value is used as required in this "get-home" mode. If the computers are involved, the system reverts to the analog back-up mode. In the event of a generic software failure as detected by a "watchdog timer," the system also reverts to the analog independent back-up mode.

AFTI/F-16 Failure Recovery Logic

Symptom	Detected By	Action
• First Failure	• Comparison Monitors	• Fly on Remaining 2 Branches
• Second-Like Failure	• Comparison Monitors	• Halt — Go to Self Test - Select Good Branch - If Self Test Indecisive ✓Sensor Failure ⇨ Reconfigure ✓Computer Failure ⇨ Back-Up
• Generic Software Failure	• Watchdog Timer	• Fly on Triplex Back-Up (Fail-Operate)

FIGURE 27

The X-29A is a control configured vehicle featuring movable canards and variable camber trailing edge flaperons. The flight control system outlined in Figure 28 employs triplex digital fly-by-wire technology with advanced redundancy management for evaluating reliability and failure transient control techniques. The system contains an analog back-up to protect against generic software failures, but no mechanical reversion capability is included.

The use of a computerized flight control system permits the programming of the variable camber device to alter the wing shape as a function of changing flight conditions. In addition to functioning as an aileron, the device increases maneuverability and reduces drag. The computerized system also permits the replacement of the horizontal tail with a canard mounted forward of the wing. The computer adjusts the angle made by the canard and airflow to reduce drag. The canards also make the vehicle aerodynamically unstable increasing the agility.

X-29A Flight Control System

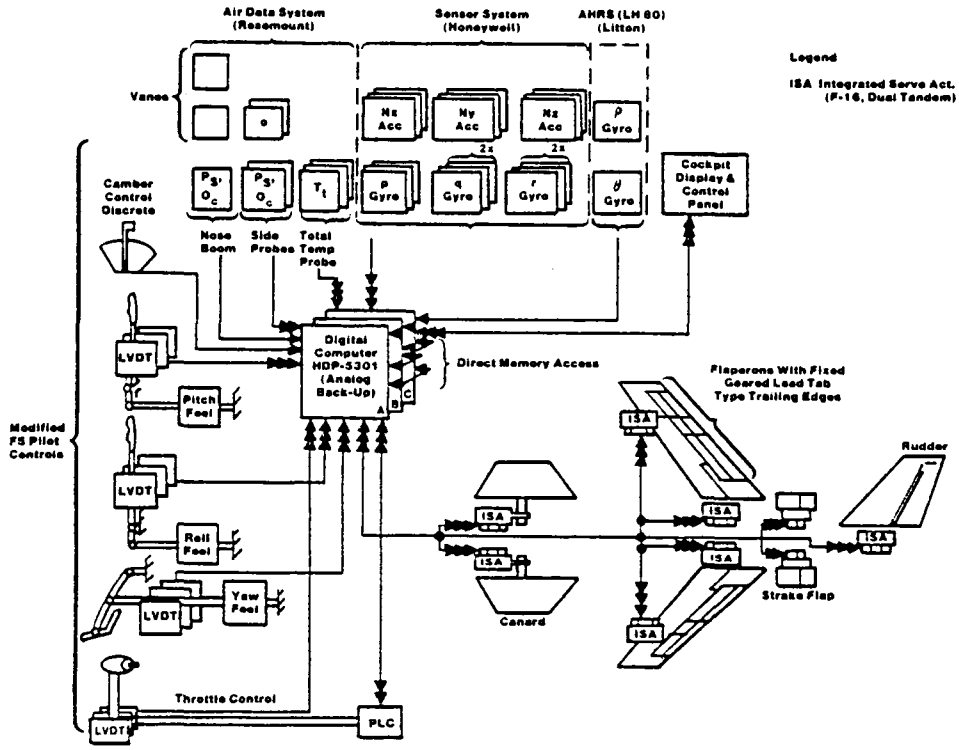

FIGURE 28

ADVANCED TACTICAL FIGHTER (ATF)

The Wright-Patterson Aeronautical Systems Division is developing an ATF for the 1990s providing flexibility not found in unmanned systems and focusing on independence of critical logistical support. Conceptual design contracts, to be completed in the spring of 1984, have been awarded to General Dynamics, Grumman, Lockheed, McDonnell Douglas, Boeing, Northrop, and Rockwell International. Full-scale development is expected to start in late 1987 with an operational date of 1993. The design is expected to include STOL, stealth, and supersonic capabilities. Fly-by-wire technology will certainly be a key element in attaining maximum aircraft performance by enabling the incorporation of advanced technology such as integrated fire/flight/engine/weapons control, and mission adaptive wing and by improving flying qualities and aircraft response. Some potential configurations are shown in Figure 29.

A separate program for the demonstration of critical technology originally established as an experimental prototype program is likely to become part of the ATF program. This would align and focus the technology on the ATF. Another program "STOL and Maneuver Technology Demonstrator" aircraft will provide data to the ATF task. The STOL demonstrator focuses on two-dimensional nozzle technology for thrust vectoring/reversing, integrated through digital flight controls. Such a capability would provide high in-flight maneuverability coupled with flexibility of take-off and landing on short runways. As planned, a fighter aircraft will be modified as a testbed for flights starting in about 1986.

ATF Concepts

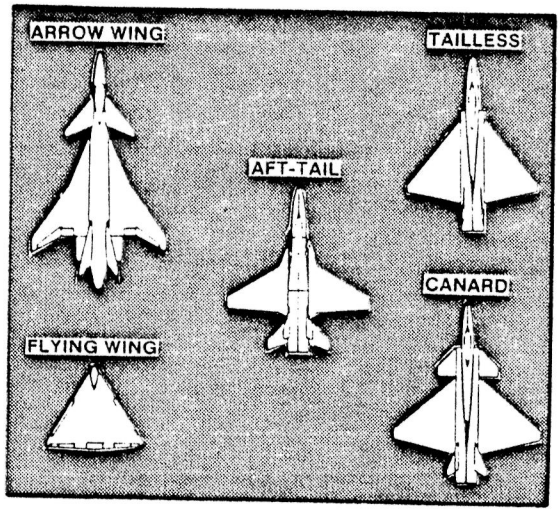

- **Advanced technology fighter for 1990s**
- **STOL, stealth, super-critical capabilities**
- **Conceptual designs underway**
- **Fully integrated controls**
- **Full-scale development 1987, operational 1993**

FIGURE 29

OTHER U.S. ACTIVITIES

During the conduct of the survey, several other technical programs were identified which directly or indirectly relate to flight crucial flight control systems. These are briefly outlined below.

HiMAT - The highly maneuverable aircraft technology program was established as a joint NASA/USAF project to develop an advanced remotely piloted research vehicle for in-flight evaluation of several advanced technology concepts and test techniques beyond those considered safe for normal piloted test operations. Among the technologies incorporated and investigated in the program are digital flight controls, close-coupled canard configurations, aeroelastic tailoring, advanced structures/aerodynamics and integrated propulsion control. In addition, the program has generated systems and test techniques providing valuable test aids and tools for further research and operational vehicle applications.

DEEC/HIDEC - The digital electronic engine control is a full authority digital engine control system designed to improve engine efficiency, performance, and operations. It includes the capability for providing engine health status information and for detecting/accommodating real-time failures. The DEEC consists of a single channel controller with selective redundancy and an integral hydromechanical back-up control. The system has been successfully flight tested by NASA using a F-15 testbed aircraft. HIDEC, Highly Integrated Digital Engine Control, is an extension of DEEC coupling in the flight control system.

ACEE/L-1011 - As part of NASA's Aircraft Energy Efficiency (ACEE) program, Lockheed developed and flight tested a maneuver load alleviation system that allowed incorporation of a higher aspect wing without major structural changes. The L-1011/500 was certified with such a system in 1980 and is now in commercial passenger service. In 1983, a limited authority pitch active control system (PACS) was developed and evaluated on a wide-body L-1011 transport. The test results indicated that the PACS will maintain good aircraft handling qualities for relaxed static stability flight conditions. The implementation of such technology necessitates the assurance of appropriate system architecture and reliability to make hazardous failures extremely improbable.

MISSION ADAPTIVE WING (MAW) - The AFTI/F-111 aircraft will serve as a testbed for evaluating the MAW. The wing has no conventional flaps, slats, ailerons, or spoilers but changes shape with varying flight conditions by using

variable camber mechanics coupled to a digital flight control system. Flight tests of the joint NASA/USAF project are scheduled to start in the summer of 1984 and continue for two years.

R&M INITIATIVE - The Flight Controls Division of AFWAL has started a new controls technology activity to improve reliability and maintainability of flight control systems by two orders of magnitude for the ATF. The program is to exploit the inherent redundancy of ATF by fully utilizing the multiple control surfaces to reconfigure after failures and use of expert system technology for automatic maintenance diagnostics.

IAPSA - The objective of the integrated airframe/propulsion control system architectures study sponsored by NASA is to define and evaluate candidate control systems architectures best suited for a high performance aircraft of the 1990s with major airframe/propulsion system coupling. Two teams were funded for this study: Lockheed - California Co., Honeywell and Pratt & Whitney; and, Boeing Military Airplane Co., and Bendix Flight Systems Division.

DMICS - AFWAL is sponsoring two studies to develop design methods for integrated control systems (DMICS); one a team of Northrop, Systems Control Technology and the General Electric Company; the other of General Dynamics, Pratt & Whitney, Honeywell and Hamilton Standard. Each team is conducting the study to develop a control design method for functional integration of flight and propulsion controls.

TRANSATMOSPHERIC VEHICLE (TAV) - Under USAF sponsorship, conceptual studies are being conducted on a TAV for providing quick-reaction, global mission capabilities. The aerodynamically configured vehicle would be capable of take off from military airfields (possibly vertically), propel itself into suborbital flight and return to the atmosphere for conventional flight operations. Advanced flight control systems development would be among the key technologies required. Continued studies and planning activities will provide the basis for a 1988 decision on prototype development.

FOREIGN AIRCRAFT SYSTEMS

JA-37 AND AIRBUS A-310

The Swedish JA-37 Viggen fighter aircraft (Figure 30) developed by Saab-Scania first flew in 1974. The aircraft design features a single channel high authority digital automatic flight system (DAFCS) provided by Honeywell and a mechanical primary FCS. Functions provided by the DAFCS include a control augmentation system, attitude hold (pitch, roll, heading and control stick steering), altitude hold and automatic airspeed control. The aircraft contains three primary control surfaces (right/left elevon and rudder) which are controlled by the pilot via the mechanical PFCS, by the DAFCS via secondary series servo and via automatic or manual parallel and series trim actuators.

The Airbus A-310 transport, currently in production, was first flight tested in 1982, and features a mechanical primary flight control system, DFBW spoilers and a digital automatic flight control system. The spoiler system is dual channel fail safe with identical active and monitor channels and uses dissimilar hardware (processors) and software. (Ref. 12)

JA-37

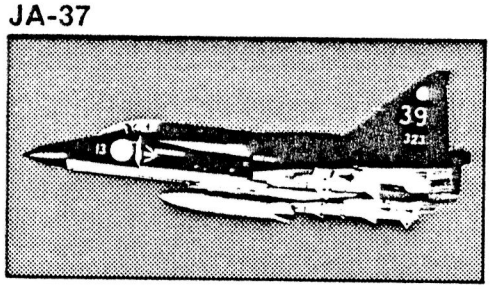

- **Swedish (SAAB-Scania)**
- **First flight 1974**
- **Single channel full authority digital automatic FCS, mechanical reversion**

Airbus A310

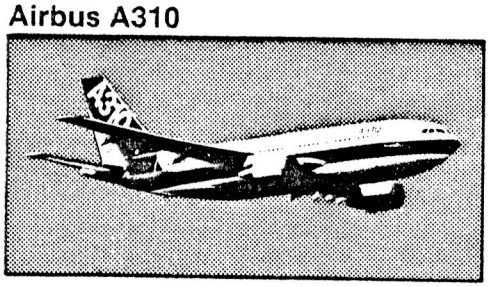

- **Multinational (Fr, FRG, Spain, UK)**
- **First flight 1982**
- **Mech primary controls, DFBW spoilers, digital autopilot**

FIGURE 30

AIRBUS A-320

Airbus Industries (AI) is in the detailed design stage in the development of a 150 seat, short/medium range A-320 transport (Figure 31) featuring a quadruplex DFBW flight control system (FCS). Mechanical control rudder and backup pitch trim are retained to permit safe landing in the event of power loss. Tests in the Airbus A-300 flight test aircraft have verified that it is possible to land in this configuration. The system design includes dissimilar redundancy in both hardware and software of the same general type used in the A-310 spoilers. The A-320 will also incorporate relaxed static stability to at least the neutral point and possibly negative static stability.

A flight test program is underway using the A-300 test bed aircraft to evaluate the use of RSS and a side stick controller on the A-320. The evaluations will determine the engineering, operational and certification issues of such systems on civil aircraft. The engines will incorporate full authority digital engine control integrated with the flight management system.

Operational Aircraft
Under Development

Airbus A320

- Multinational (Fr, FRG, Spain, UK)
- Detailed design in progress
- First flight 1986
- Quad DFBW — dissimilar redundancy hardware and software
- Mech backup on rudder and pitch trim
- ACT: relaxed static stability
- Side stick controller

FIGURE 31

A-320 DFBW SYSTEM

A more detailed description of the A-320 DFBW system design features is shown in Figure 32. All primary flight control surfaces (elevators, horizontal stabilizer, ailerons and roll spoilers) are quadraplex digital fly-by-wire using dissimilar redundancy in both hardware and software. The rudder control is mechanical and the tailplane trim has a mechanical back-up to provide emergency landing capability. The secondary controls (slats, trim, speed brakes and lift dumpers) are commanded electrically.

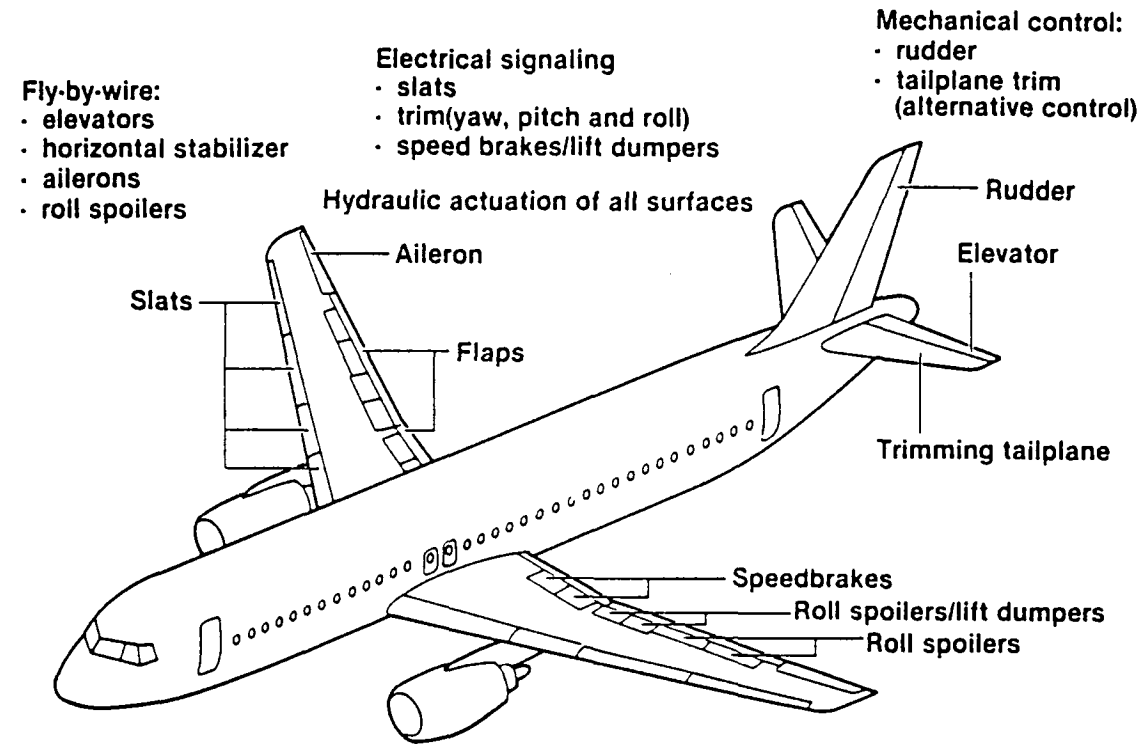

FIGURE 32

AIRBUS INDUSTRIES FLIGHT CONTROL SYSTEM EVOLUTION

Airbus Industries' (AI) planned development of a transport family is illustrated in Figure 33. Based on a continued, vigorous research and development program, including full scale experimental testing, advanced technologies are incrementally introduced in aircraft designs providing practical, evolutionary changes rather than revolutionary. The next transport is the 150 seat A-320 described previously. A series of wide-body aircraft is in the preliminary design stage: a two engine short/medium range TA-9; a four engine long range TA-11; and, a two engine medium/long range TA-12. The first two of these, TA-9 and TA-11 are expected to incorporate full authority digital fly-by-wire system on all surfaces, extensive use of active controls, and reduced energy systems.

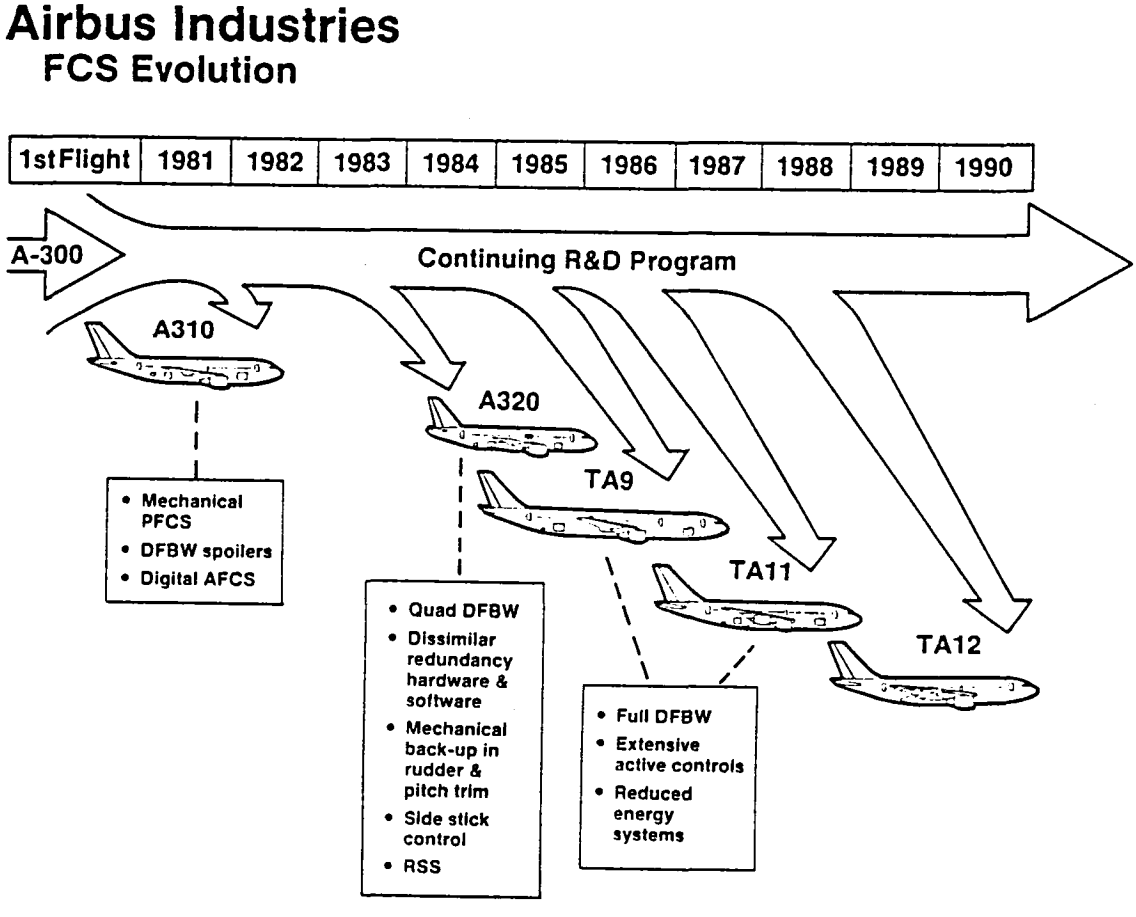

FIGURE 33

TORNADO AND MIRAGE

Figure 34 illustrates basic characteristics of the multinational Tornado and French Mirage 2000/4000 aircraft currently in production. The Tornado, a joint UK, FRG, and Italian project, underwent its first flight in 1976. The flight control system includes both analog and digital computing. The primary flight control function is performed by a command/stability augmentation system (CSAS) which is a triplex analog FBW maneuver demand system (Ref. 8). While no mechanical reversion is provided for the rudder and spoilers, it is retained for the ailerons for safe return upon loss of CSAS computing. A dual digital autopilot/flight director (AFDS) integrated with the CSAS provides outer loop control. The AFDS uses cross-comparison techniques for failure detection and a signal consolidation scheme to provide triplex commands to the CSAS. It also provides a fail operational flight director capability to enable the pilot to monitor the autopilot performance and fly the aircraft manually if the autopilot malfunctions.

The first flights of the Dassault-Brequet Mirage 2000 and 4000 were conducted in 1978 and 1979 respectively. With no mechanical reversion capability, both include a flight critical analog FBW flight control system with digital autopilot. The 2000N version is nuclear hardened fitted with terrain-following radar. The Mirage 4000 features relaxed static stability and automatic variable camber to optimize performance.

Tornado

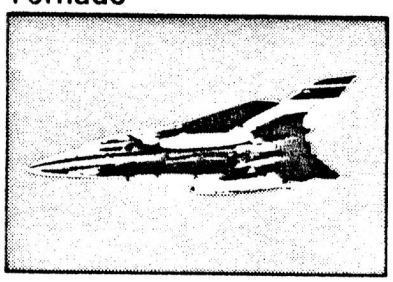

- **Multinational (UK, FRG, Italy)**
- **First flight 1976**
- **Analog CSAS, dual digital autopilot, mechanical reversion**

Mirage 2000/4000

- **French (Dassault-Breguet)**
- **First flight 1978, 1979**
- **Analog FBW, digital autopilot, no mechanical reversion**
- **Relaxed static stability/auto variable camber (4000)**

FIGURE 34

AGUSTA A-129

The Italian Agusta A-129 helicopter, shown in Figure 35, was first flight tested in September 1983, and four additional prototypes are expected to provide over 2,000 flight hours prior to production deliveries starting in late 1986. The A-129 Mongoose features a separate non-flight critical digital fly-by-wire (DFBW) tail rotor but retains other mechanical control systems with a dual FBW back-up. It contains an integrated multiplex system compatible with MIL-STD 1553 data buses which combine communication/navigation, fly-by-wire and several system monitoring functions. It uses dual computers for overall systems control each of which is capable of operating the integrated system alone.

Operational Aircraft
Under Development

Agusta A-129

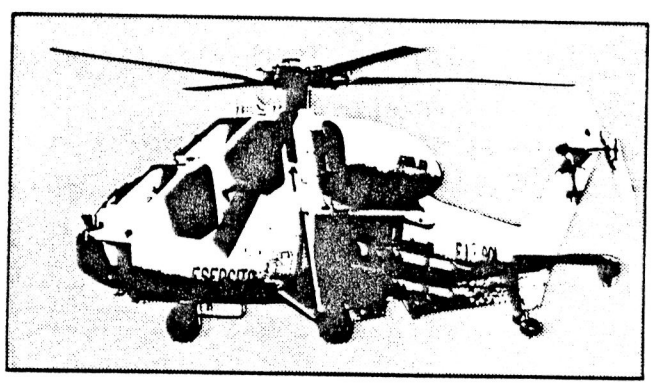

- Italy
- First flight 1983
- DFBW tail rotor, digital autopilot, mechanical rotor controls
- Multiplex data bus/ integrated avionics/ flight control

FIGURE 35

JAS-39 AND LAVI

Flight critical DFBW flight control systems designs are under development for opertional fighter aircraft in both Sweden and Israel (Figure 36). Saab-Scania of Sweden is developing the JAS-39 Gripen advanced strike fighter. Lear Siegler, Inc., will design, develop, and manufacture the flight control system. Under subcontracts, Moog Aerospace in cooperation with Saab Combitech will design the primary flight actuators and Lucas Aerospace will supply the maneuvering flap control actuation system. The JAS-39 will be a flight critical triplex DFBW system and, thus, contain no mechanical backup capability. The fighter scheduled for first flight in 1987, is being developed for specific mission needs of Sweden and may not favorably compete for an international market.

The Israeli Aircraft Industries is developing the Lavi tactical fighter to replace the A-4 and Kfir C2 aircraft with first flight scheduled for 1986. The flight controls, to be designed by Lear Siegler (Moog), will be a digital fly-by-wire system with relaxed static stability and include an analog but no mechanical backup system. Advanced digital avionics systems will be incorporated to operate with interactive multifunction displays/controls, fire control integrated with internal and external sensors, and enhanced active/passive self-defensive systems. As planned, much of the design and systems would be supplied by US companies.

JAS-39

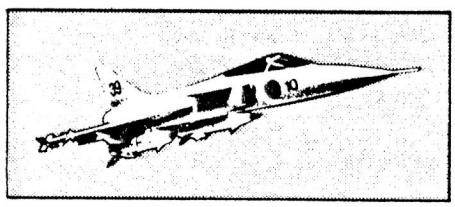

- **Swedish (SAAB-Scania)**
- **First flight 1987**
- **Triplex DFBW (Lear Siegler), no mechanical backup**

LAVI

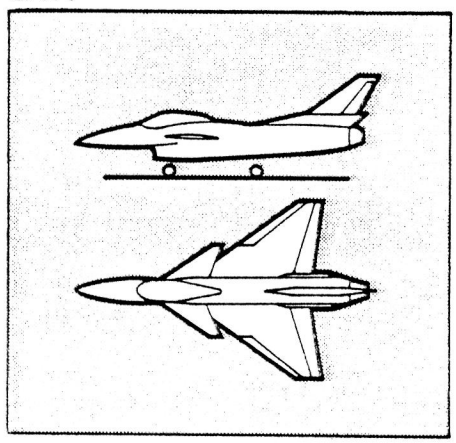

- **Israel (IAI)**
- **First flight 1986**
- **Triplex DFBW (Lear Siegler), analog backup, no mechanical reversion**
- **ACT: relaxed static stability**

FIGURE 36

SKYSHIP 600

In the UK, Marconi Avionics under contract to Airship Industries is developing a digital fly-by-light (DFBL) flight control system for application to the Skyship 600 (see Figure 37). High inherent immunity to electromagnetic inteference is achieved by a 1553 optical data bus between the flight control computer and the actuator drive system (ADS) and by providing dedicated electrical power at the ADS from a hydraulically driven electric generator. The ADS includes a microprocessor to locally handle the failure detection and isolation. The actuators are duplex electric incorporating two samarium cobalt DC servomotors mounted on a common shaft, each fed by separate power. Torque is supplied by only one motor - the second is activated after failure of the first.

Operational Airship
Under Development

Skyship 600

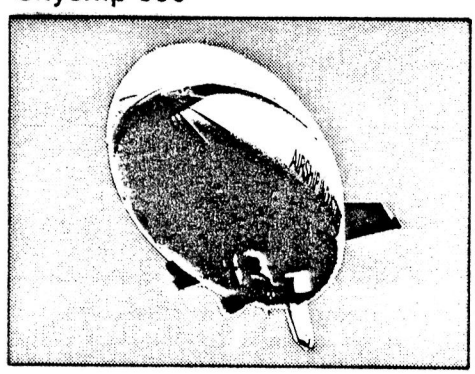

- UK (Airship Industries, Marconi)
- First flight 1983 (with DFBL)
- Digital fly-by-light (DFBL)
  - All four tail surfaces
  - Active/standby with pilot select
  - Microprocessor-based FCS computer
  - 1553 optical data bus

FIGURE 37

TAIWAN F-104

The Aeronautical Research Laboratories of the Aeronautical Industry Development Center (AIDC) of the Republic of China in Taiwan has initiated a program to develop a modern digital flight control system to upgrade 100 F-104 aircraft (Figure 38). The system will be a half-authority dual digital command augmentation system (CAS) and stability augmentation system (SAS) for pitch, roll, and yaw. The existing mechanical system and a new direct electrical command system will provide emergency backup capability. The prototype development contract for five aircraft systems has been awarded to Lear Siegler. The first flight of the updated aircraft is expected to be in early 1987.

Operational Aircraft
FCS Upgrade

F-104

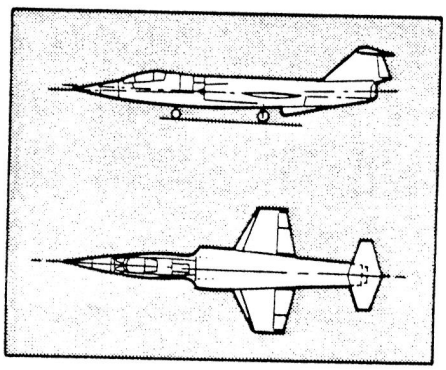

- Republic of China-Taiwan (AIDC)
- FCS under competition
- First flight 1987
- Dual digital CAS/SAS, mechanical and direct electrical backups

FIGURE 38

F-104 CCV AND T-2 CCV

Among foreign R&D flight programs is the German F-104 CCV and the Japanese T-2 CCV aircraft shown in Figure 39. The purpose of the German demonstration program was to investigate stability and control characteristics of a supersonic aircraft (Ref. 13). A single seat F-104G was modified as a control-configured vehicle (CCV) with a newly developed full authority quadruplex system while retaining the original system as a mechanical back-up. After initial flights starting in December 1977 to evaluate the digital fly-by-wire (DFBW) system, various degrees of destabilization were achieved by adding aft ballast and a canard. The highest instability reached in normal flight was up to 22% mean aerodynamic chord at an angle of attack of 11 degrees. The flight tests were highly successful in demonstrating aircraft controllability in a highly unstable configuration.

Under contract to the Japanese Defense Agency, Mitsubishi has built a control-configured vehicle version of the T-2 advanced trainer for use as a research aircraft. The T-2 CCV has composite all-flying canards located on the inlets ahead of the wing leading edge and a composite ventral fin located on the fuselage center line. The flight control system is triplex digital with mechanical backup. The first flight was conducted in August 1983 and the aircraft is scheduled for a two year experimental flight test program by the Japanese Air Self Defense Force.

F-104 CCV

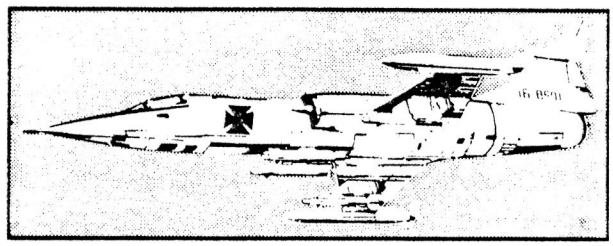

- German (MBB)
- First flight 1977
- Quad DFBW, full authority, mechanical reversion
- RSS

T-2 CCV

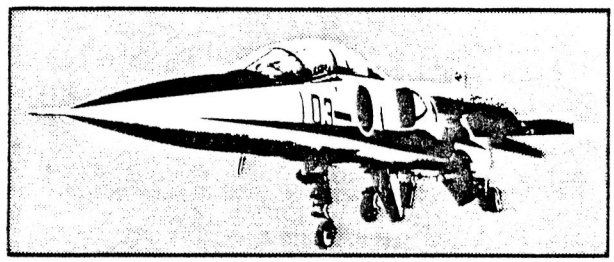

- Japan (Mitsubishi)
- First flight 1983
- Triplex DFBW, mechanical reversion
- All moving canard/RSS

FIGURE 39

JAGUAR DFBW

The Jaguar program was initiated to demonstrate a safe, practical, full authority digital fly-by-wire (DFBW) flight control system. This activity is of interest since it represents the first pure digital fly-by-wire system with no dissimilar back-up. The program was initiated in 1977 under the technical sponsorship of the Royal Aircraft Establishment (RAE) and under contract to British Aerospace. Marconi Avionics furnished the flight control system. While more descriptions will follow, basically, the FCS is a full authority quadruplex DFBW system with optically coupled data transmission. The initial flight of the aircraft, shown in Figure 40 was conducted in October 1981.

R&D Flight Programs

Jaguar DFBW

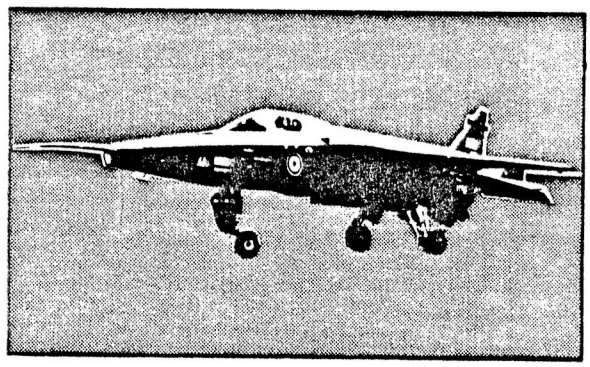

- UK (RAE/BAe, Marconi)
- First flight 1981
- Quad DFBW, no mechanical reversion
- Optical interchannel data links

FIGURE 40

JAGUAR DFBW SYSTEM ARCHITECTURE

The overall system architecture is shown schematically in Figure 41. (Ref. 14). Quadruplex computers and primary sensors were used to satisfy specifications requiring survival of any two electrical failures in the system and reliance on majority voting rather than self monitoring within each redundant element. Sensors of lower redundancy were used for those functions not necessary for safety of flight. A sextuplex or duo-triplex first stage actuation scheme was selected to conform with stringent redundancy specifications. The two additional actuator channels are driven by the Actuator Drive and Monitor Computers which were independently voted versions of the flight control computer outputs. Comprehensive built-in-test features were included to measure the system functional characteristics. While designed to run synchronously, the system has been operated asynchronously for continued periods without observable degradation.

Jaguar DFBW
System Architecture

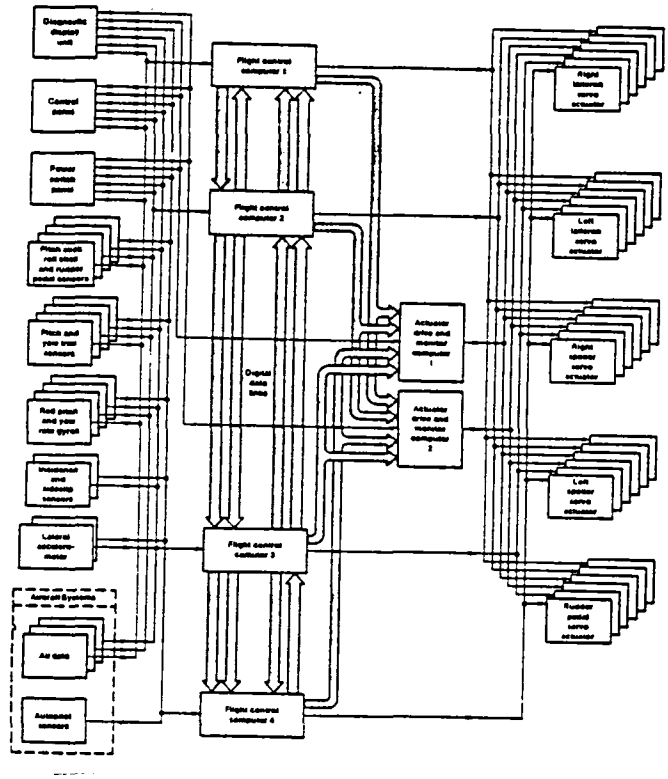

FIGURE 41

JAGUAR DFBW - COMPUTING AND MONITORING ARCHITECTURE

The basic system computing and monitoring architecture is presented in Figure 42 which illustrates a simplified primary control path. (Ref. 15) Quadruplex primary sensors, those necessary for flight safety, are interfaced with four identical flight control computers (FCC) which process these as well as less critical sensor signals into commands for control of the actuators. Cross channel data transmission is achieved by optically coupled serial data links. This scheme enables each computer to carry out bit for bit identical control law implementation. Voting and failure rejection logic contained in each computer satisfies the requirement for surviving two sequential failures of all critical sensors. The actuation architecture required six independent servo drive signals. To avoid the cost and complexity of a full six channel system, the four FCCs were augmented by dual analog actuator drive and monitor computers (ADMC) which utilize independently voted versions of the FCC output signals to drive the additional two channels. Failed FCC channels are detected and latched out and then the ADMC averages the remaining good FCC channels. These additional channels are mechanized to eliminate any interchannel failure propagation between the six parallel redundant output interfaces.

Jaguar DFBW
Computing and Monitoring Architecture

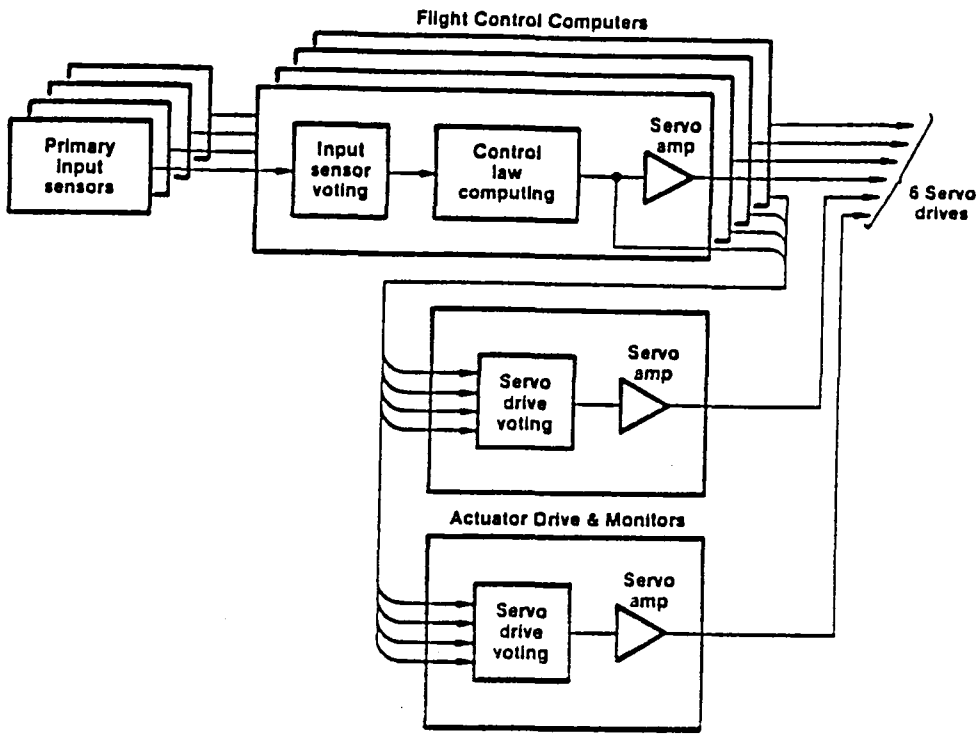

FIGURE 42

JAGUAR DFBW-DUO-TRIPLEX ACTUATOR SCHEME

The basic specifications requiring that first stage actuation have only two independent hydraulic supplies with no interconnect and that the system survive a hydraulic failure followed by an electrical system failure or the converse, led to the selection of duo-triplex first stage actuation system design. While a quadruplex configuration would have offered an attractive one-to-one interface with the flight control computers, designers were concerned with mechanizing some form of fast reaction actuator monitoring and channel isolation scheme to prevent uncontrolled surface movement in the event of an electrical followed by a hydraulic failure. Each of the five control surface actuation systems is similar and Figure 43 illustrates the operation (Ref 15). Each system contains six servovalves. An inter-actuator mechanical link assures that the spools move uniformly which effectively sums the six servovalve outputs. Thus, failures in two channels is overridden by the other four. A separate hydraulic supply feeds each trio of servovalves and is also routed to the corresponding jack of the conventional tandem power control unit. A hydraulic supply failure is absorbed because the three associated servovalves are unable to oppose the correctly operating channels.

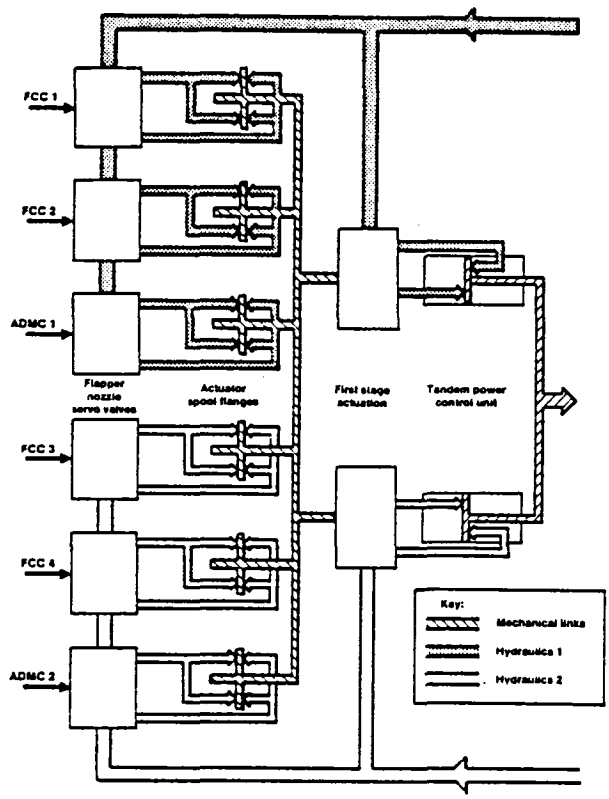

FIGURE 43

JAGUAR DFBW - SOFTWARE DEVELOPMENT PROCESS

The use of common software in the flight control system presented the potential of a generic error leading to a safety critical loss of control. Therefore it was necessary to provide maximum software visibility to facilitate thorough testing and functional auditing during the design phase, supplemented by clear requirements definition, detailed documentation and stringent production and configuration control procedures. (Ref. 16) The key documents controlling the software design are the System Requirements Document (SRD) which controls the design implementation and the Software Structure Development (SSD). The SSD defines the running order of the modules within each program segment and is designed to assure strict sequential data flow.

The overall software development process is depicted in Figure 44. The SRDs are interpreted to produce software module design specifications which in turn are used for module coding. A module test specification is written by an independent programmer to minimize error carry-over. The module code is tested and the results documented. Senior programmers audit all module documentation to assure that the design requirements are satisfied, the design rules observed and the test process followed. When the module coding is completed, the modules are assembled and loaded into the hardware for integration tests. All of the software documentation is subjected to strict configuration control with changes authorized only through a formal change request process.

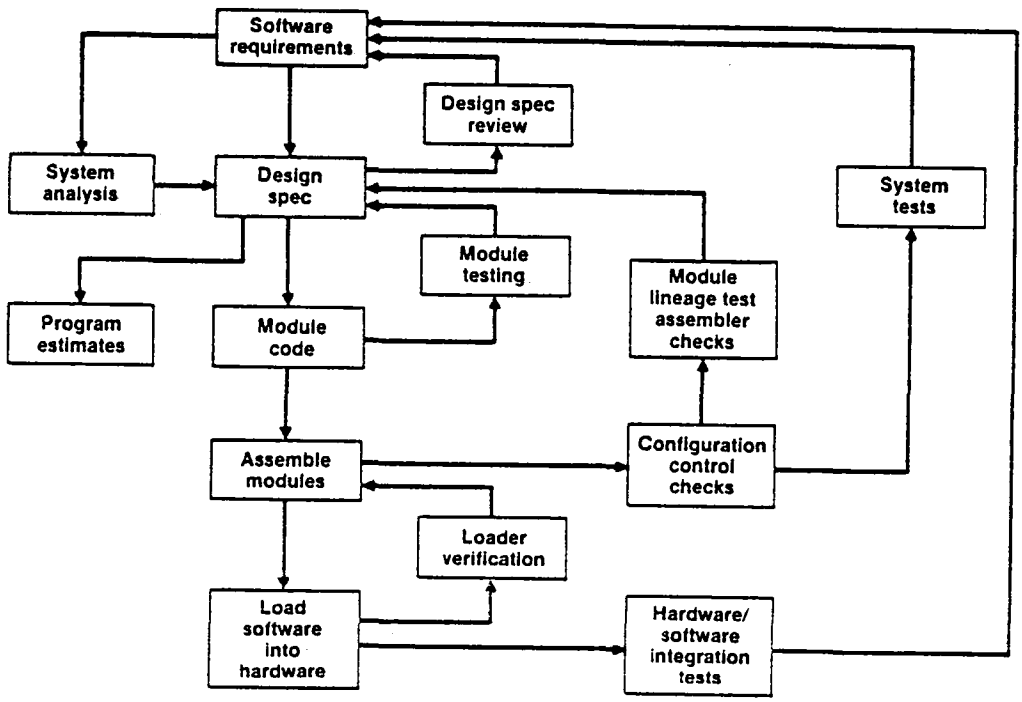

FIGURE 44

JAGUAR DFBW - SYSTEM INTEGRITY APPRAISAL

The basic integrity of the system was achieved by the selection of the system architecture in conjunction with standard design practices, performance testing and assessments of operational/safety considerations. For the Jaquar DFBW program, these procedures were extended to include an integrity appraisal or system audit as outlined in Figure 45. The main elements (Ref. 16) were:

- 100% coverage single fault FMEA
- Multiple fault FMEA for specific combinations
- Flight resident software integrity appraisal
- Appraisal of specific functions
- Configuration inspection
- Qualification program
- Burn-in program

and were supplemented by secondary analyses shown below the main elements in the figure. As part of the integrity appraisal, various functions and features of the system were subjected to technical evaluations as required from results of mainstream failure mode and effects analysis (FMEA) and/or engineering findings. While the appraisal was conducted by a team knowledgable in the specific design, they reported to senior engineers.

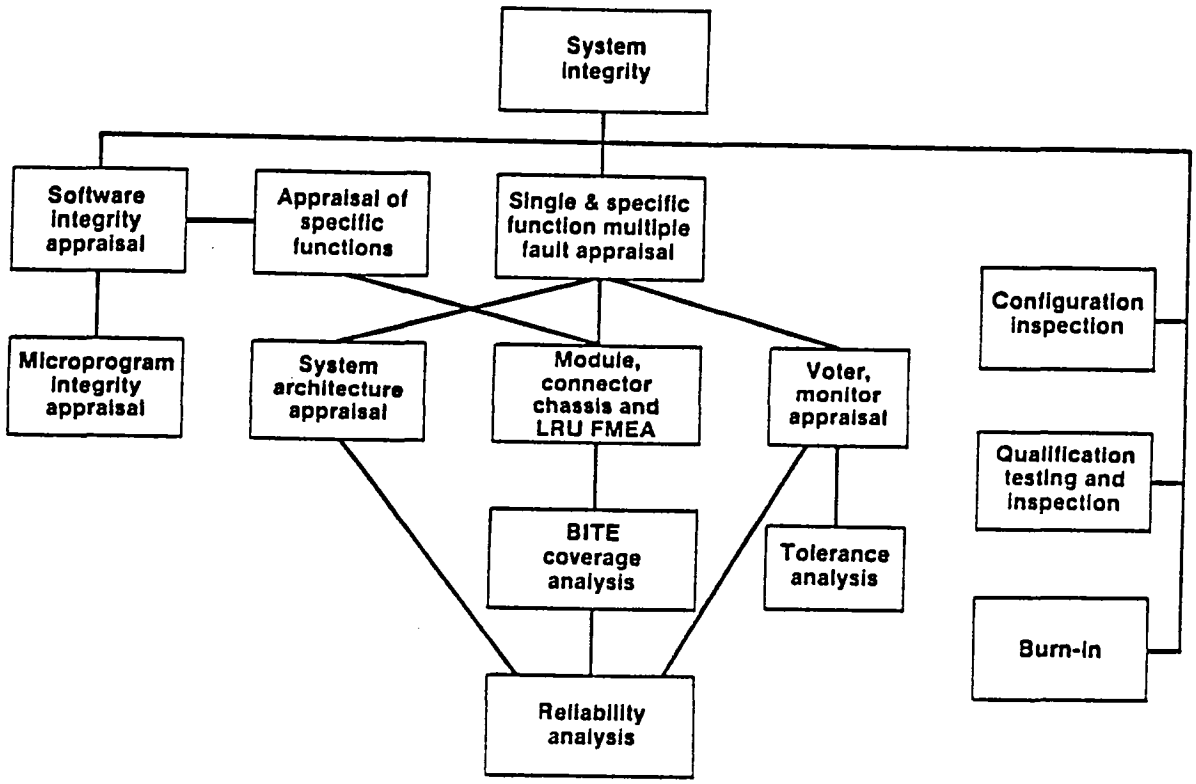

FIGURE 45

JAGUAR DFBW - SYSTEM QUALIFICATION PROCESS

Once the design objectives had been specified as subsystem or elements, such as the flight control system, it was necessary to integrate these elements into a functional system exhibiting the characteristics of the basic design requirement while assuring that no adverse intersystem reactions were present and verifying that the common software used contained no generic or other design defects. These tasks were conducted using a ground test rig, the aircraft, and an independent software audit, inter-related as shown in Figure 46. (Ref. 16.)

The ground test rig was used to (1) verify the control laws by pilot assessment, (2) integrate the hardware, software and ancilliary equipment, (3) validate the final software before flight, and (4) gain overall system confidence. In addition, it served as a pilot training aid and as a preflight testbed.

The aircraft ground tests included complete checkout and test of the installed flight control system, electro-magnetic compatibility testing, aircraft systems testing, and simulated lightning tests.

It was considered essential that an independent software test by a disinterested group be used to supplement the rig and aircraft tests. The group was responsible for emulation of the flight control computer using a general purpose machine and for manual code analysis.

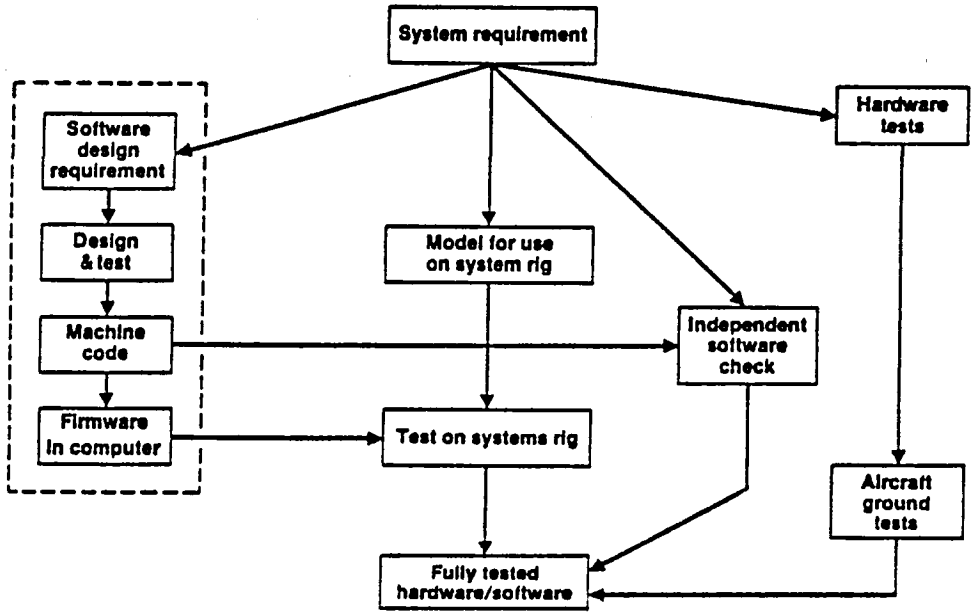

FIGURE 46

JAPANESE STOL

Japan is developing an experimental short take-off and landing (STOL) transport featuring an upper-surface blowing (USB) propulsive lift system based on technology applied to the USAF YC-14 prototype and NASA quiet short-haul research aircraft. The Japanese aircraft, simply called STOL, is shown in Figure 47 (only two of the four powerplants have been installed).

The STOL is a Kawasaki C-1 dual engine transport modified to accommodate four shoulder-mounted engines and the USB system. Scheduled for first flight in 1984, the experimental vehicle is being developed by a team comprising Kawasaki, Mitsubishi and Fuji under the sponsorship of the National Aerospace Laboratory. The experimental STOL features a triplex digital augmentation system but can fly on the mechanical system. This STOL is of particular interest internationally because it will investigate the application of USB technology on commercial transports. Japan's interest in STOL is based on increasing complaints about noise near urban areas and the fact that many airports have short runways due to existing congested conditions.

R&D Flight Program
Experimental STOL

STOL (Japan)

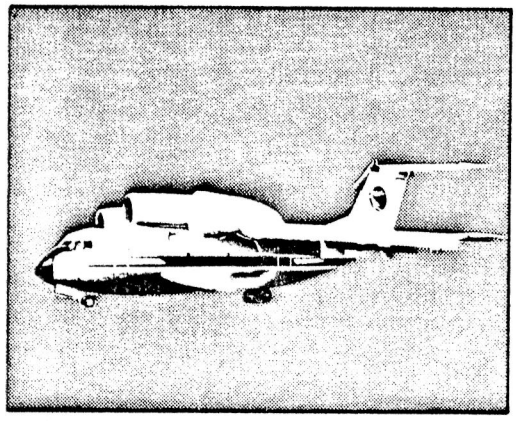

- National Aerospace Lab
- First flight 1984
- Triplex digital augmentation
- Explore USB for commercial use
- Based on YC-14 & NASA's quiet short-haul technologies

FIGURE 47

AM-X

Italy (Aeritalia-Macchi) and Brazil (Embraer) are jointly developing the AM-X fighter with first flight scheduled for 1984 and delivery in 1987 (see Figure 48). Initial production is expected to provide 185 aircraft for Italy and 80 for Brazil. The electronic flight control system designed by Marconi provides duplex analog fly-by-wire control of the tailplane, spoilers, and rudder together with mechanical elevators and ailerons. The design also incorporates automatic pitch, roll, and yaw stabilization. The equipment comprises two dual redundant flight control computers based on 16-bit microprocessors organized for specially developed fail-safe software. To optimize hardware requirements, analog computing is used for the actuator control loops, pilot command path, and rate damping computations. Digital computing is used to handle gain schedules, electronics trim, and airbrake integrators. System performance is monitored by redundant processors in the flight control computers.

Advanced Aircraft Development

AM-X

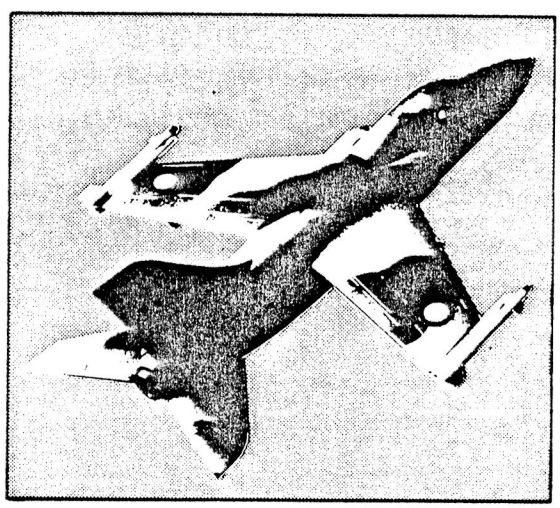

- Italy, Brazil (Aeritalia/ Macchi, Embraer, Marconi)
- First flight 1984
- Duplex analog FBW, digital gain sched/monitoring (tailplane, spoilers, rudder)

FIGURE 48

ADVANCED EUROPEAN FIGHTER DEVELOPMENT

Plans are underway for the development of a common European fighter aircraft for the 1990s, called the Future European Fighter Aircraft (FEFA). It is an outgrowth of three separate preliminary design efforts undertaken by the UK, France and Germany. While some joint collaboration exists on these design efforts, economic considerations make it unlikely that more than one would be fully developed. Thus, at the time of this writing, these three countries joined by Italy and Spain have outlined basic operational requirements for the FEFA which will be a STOL vehicle and rely heavily on advanced composites. Advanced digital flight controls will play an important role since current combat aircraft developments and research activities in Europe concentrate on this technology. While specific mission requirements would be compromised, such a joint European effort would create an attractive production market and serve as a formidable obstacle for US competitors. Prototypes of the FEFA vehicle are expected in the 1990-1991 time period to provide an operational date of 1995. Initial plans call for 400 planes for France and Germany, 150 for the UK and 125 each for Italy and Spain. Some other European activities which have led to the FEFA and which may be modified because of the recent agreements are discussed below.

Led by British Aerospace, a seven member industrial consortium has an agreement with the British Ministry of Defense for government funding up to and including first flight for the development of an Agile Combat Aircraft (ACA) technology demonstrator called an Experimental Aircraft Program (EAP). (See Figure 49) Both West German and Italian aerospace companies have contributed some funding and while not committed, the West German and possibly the Italian governments may fund a second demonstrator aircraft. The ACA flight control system design by Marconi Avionics would be quadruplex digital fly-by-wire (DFBW) with no mechanical backup and no dissimilar redundancy. (Marconi considers that while not required for military application, dissimilar redundancy is necessary in commercial aircraft for certification purposes.)

France has a comparable program since Dassault-Berguet has begun manufacture of one technology demonstrator aircraft - Avion de Combat Experimental (ACX) as shown in the figure. It will be a DFBW design with no mechanical backup and include electrical and fiber optics data busing, voice control system, holographic displays, and provision for anti-turbulence ride control in the automatic computer-controlled flight control system.

The Federal Republic of Germany (FRG) has need for a fast reaction fighter and their special requirements are prompting them to consider an entirely new fighter airframe called the JF-90 which would employ existing avionics technologies to minimize costs. Two German companies, Messerschmett-Boelkow-Blohm (MBB) and Dornier, are pursuing test programs to satisfy the German Air Force needs but neither is committing to a flying demonstrator. MBB is using a modified Saab Viggen as a test-bed to investigate various performance envelopes and is testing vectoring nozzles, canards, and other advanced control features. MBB has considerable experimental background in fire and flight control systems resulting from their F-104 CCV test-bed.

Dornier in conjunction with Northrop has an ND-102 design and is using a modified Alpha jet to test a new transonic wing and to experiment with direct side force controls and maneuvering flaps/slats.

Advanced Aircraft Development

ACA

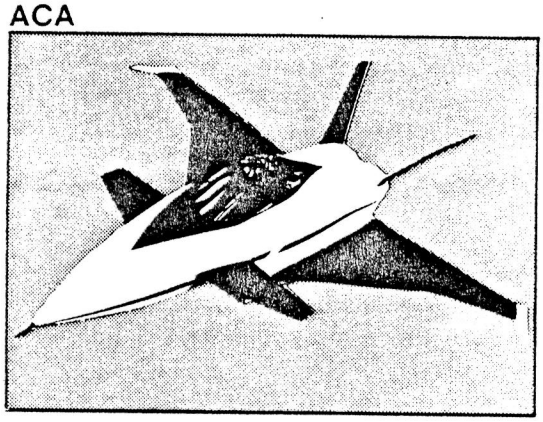

- United Kingdom/Germany
- Advanced technology demonstrator
  - Includes stealth technology
- Quad DFBW, no mechanical reversion, no dissimilar redundancy
- Gust alleviation
- First flight 1986

ACX

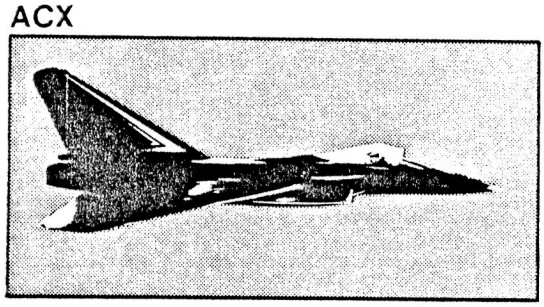

- France/(Germany?)
- Technology demonstrator
- DFBW, no mechanical reversion, fiber optic data bus
- Ride control, voice command, holographic HUD
- First flight 1986

FIGURE 49

OTHER FOREIGN SYSTEMS

Two other major foreign programs were identified in the survey that are either under development or planned, but very little information has been assembled at this time.

Agusta of Italy and Westland of the UK have teamed to form EH Industries Ltd., (EHI) to develop a new helicopter, the EH-101, to replace the Sikorsky SH-3D Sea King that is used by both navies. They also hope to market utility and civil versions. Smiths Industries of the UK is developing what they refer to as a DFBW but it is not clear whether there is a mechanical primary or reversion system. The first of nine pre-production aircraft is to be ready for flight in 1986.

The UK Royal Aircraft Establishment (RAE) has initiated a major new thrust: VSTOL advanced aircraft control technology (VAAC) program. It appears to be focused on integrated fire, flight, and thrust vector control for single pilot operation including weapon delivery. Smiths Industries is working on a flight control system for the RAE. Flight tests may be conducted on a Harrier aircraft but it is not known whether the flight test would include an advanced DFBW or not.d

TECHNOLOGY TRENDS

TECHNOLOGY TRENDS

Reporting on trends in technology for flight control systems is at best valid for only a brief period of time. Such reports are also biased by the backgrounds of the authors. This section of the report represents the authors' view of major trends in the technology in the United States and Europe. The reader is reminded again that this is not intended to be an in-depth treatment of the technology elements, but rather a study of major trends in systems level technology. Some observations are made in this section about the major technology elements. However, several important facets are not treated, such as optical transducers, design and verification tools, techniques for estimating systems reliability, and software engineering issues.

UNITED STATES

Microelectronics have been and continue to be the key driver of technology advances in flight controls. The introduction of digital computers and built-in test capability in automatic flight control and stability augmentation systems has increased mean-time between failures and reduced maintenance costs. The overall systems costs have generally not dropped due to the high cost of developing and maintaining the software and the fact that the systems have tended to become more sophisticated because of the increased capability provided by the digital computers.

Digital computers are now being used in primary flight control systems of operational aircraft but with some type of back-up system, e.g., F-18 with analog and mechanical back-ups, Boeing 767/757 with analog for flight crucial functions and mechanical system. The Space Shuttle is the only operational manned aerospace vehicle at present with a pure digital fly-by-wire (DFBW) system and it uses a dissimilar digital back-up system. It appears that the first U.S. military aircraft with a pure DFBW will be the F-16 C/D upgrade. The system will basically replace the analog computers in the existing FBW system with digital computers. The U.S. military appears to be ready to accept digital fly-by-wire and fly-by-light (DFBW/L) in their next generation tactical aircraft. e.g., Navy's JVX, Army's LHX, and the Air Force's ATF. It is not clear if or when the U.S. transport industry will commit to pure DFBW/L. A general consensus is that it will come but not until after the year 2000.

The major elements of flight critical controls are listed in Figure 50 in such a manner to illustrate technology trends. The upper portion represents architectural elements related to the flight control computers: processing, computer redundancy and software fault protection. The lower portion represents the remaining major elements: sensors, data distribution and actuators. The inner circle indicates the type of technology that is currently being applied or considered for new operational aircraft, and the outer portion presents key technologies which are under development or just emerging for applications in each area.

Actuators - Several electro-hydraulic servo actuator concepts are currently being used for fly-by-wire redundancy, e.g., active-standby on the F-16, position summing dual actuator for stability augmentation systems and force summing (parallel or tandem) with self-monitoring on the F-18 ailerons. Concepts under development and/or just emerging into applications include a four valve velocity summing servo actuator being flight tested by Bell Helicopter for a joint Army/Navy R&D project, direct drive servo valves which Moog is using on the Israeli Lavi and the Swedish JAS-39 and electro-mechanical actuators being developed under DOD and NASA programs.

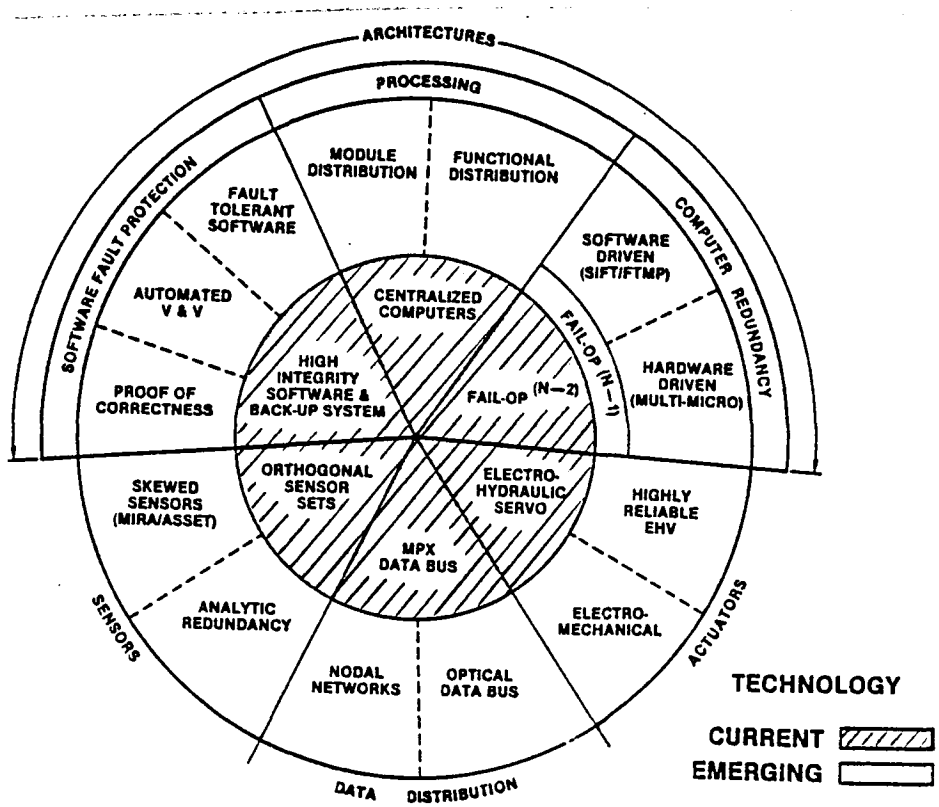

FIGURE 50

Data Distribution - Multiplex (MPX) data buses are used extensively in avionics systems in the most recent operational aircraft, e.g., F/A-18 uses MIL-STD-1553 (Reference 2) and B767/757 uses ARINC 429 (Reference 17). Currently, the buses are twisted wire pairs. They are used in coupling sensor data to flight control systems primarily for outer loop functions. Flight critical functions are still dedicated wires and not multiplex data buses, e.g., the yaw damper on the B-767/757. All of the command augmentation system functions on the F/A-18 are dedicated wires. Mission avionics are on the data bus and interface with the flight control computers.

An important emerging technology is the optical data bus. A primary motivation for that on flight critical controls is the protection fiber optics provide from EMI and EMP. Several laboratory and flight test programs have been conducted on optical data bus technology, the most significant of which is the Army's ADOCS Program outlined earlier in the report. This type of technology is expected to be incorporated into the Navy JVX and the Army LHX vehicles. MIL-STD-1773 has been proposed as the military standard for fiber optic multiplex data buses.

Various new approaches to providing increase fault tolerance on data buses are being studied (e.g., References 18-21). A good review of alternate architectures is presented in Reference 22. One particularly interesting concept is the "nodal network," described in Reference 22, which would provide many potential paths between critical functions and hence increase fault tolerance.

Sensors - Individual sensor instruments for flight control functions seem well developed, although new ideas continue to emerge, such as the ring laser gyro and the fiber optics rotation sensor. The current practice is to use a fully redundant set of orthogonal sensors for fly-by-wire systems. Two new concepts are under development that have the potential of meeting the total system reliability requirements with fewer sensors. One is analytical redundancy (Reference 23), which synthesizes missing aircraft motion parameters from alternate flight measurements and the vehicle dynamics relationships. The other is to skew certain sensors to measure components of motion in more than one axis, then synthesize the desired orthogonal set of motion parameters (e.g., MIRA in References 24-26 and ASSET in References 27 and 28. Failure of one instrument can not jeopardize the augmentation in any one axis.

Processing - The aspect of processing in flight control addressed here is the issue of centralized versus distributed processing. The current practice is to use redundant control computers for all the primary flight control system functions and often the augmentation functions as well (e.g., F/A-18 Reference 2). Functional distribution of the processing is beginning to appear on operational aircraft, e.g., separation of critical and non-critical functions as in the yaw damper of the B-767/757 (Reference 17). Another form of distributed processing would be module distribution, where certain computational tasks are off-loaded from the central computer, e.g., pre-processing and redundancy management of a sensor system or smart actuators that defect failures and reconfigure.

Software Fault Protection - It is virtually impossible to assure that the software used in a DFBW system is 100% fault free because of the enormous number of states that can exist. "Software faults" can arise from such items as bad specification, erroneous code and poor programming discipline. To protect against software faults causing potential catastrophic system failures, the current practice in operational systems is to develop high integrity software through good design techniques and extensive verification and validation (V&V) and to provide a dissimilar backup system (e.g., F/A-18 Reference 2). Several approaches are being researched to improve software fault protection from new mathematical techniques, such as proofs of correctness, to automating the V&V tests and fault tolerant software concepts.

Computer Redundancy - The current approach to redundancy is to use N multiple identical channels and compare the outputs to detect failed channels. If a two "fail-op" capability is needed, then N must be 4 in such an approach. The AFTI-16 is flight testing an approach to achieve $(\text{Fail-op})^2$ with three channels by a form of self test to operate down to a single channel (Reference 11). Such approaches have the potential of achieving total system flight safety reliability of up to 10^{-7} failures for flight hour which generally meets the military requirements. The commercial transport community is striving for a failure probability of less than 10^{-9} for a 10 hour flight. Several new architectural concepts for improved fault tolerance are under development. Three new concepts are discussed in the next section.

Figure 51 presents simple representations of three different architectural approaches to achieve increased fault tolerance. The Software Implemented Fault Tolerance (SIFT) and Fault Tolerant Multi-Processor (FTMP) are experimental computers developed for NASA Langley Research Center by SRI (Reference 29) and Charles Stark Draper Laboratory (Reference 30), respectively. The "Multi-Micro" flight control system (M^2FCS) is a Honeywell concept developed under contract from AFWAL (Reference 31 & 32).

As implied by the name, the SIFT concept depends largely on software programs, rather than hardware to achieve fault tolerance. Redundancy is accomplished by replicating computations according to their criticality. Computations are performed on separate equipments whose faults are independently constrained to provide fault isolation. Fault masking and detection is accomplished by periodically combining critical results, and using majority voting to mask faults and comparison to detect and diagnose faults. Hardware detected to be faulty is reconfigured out of the system and its workload transferred.

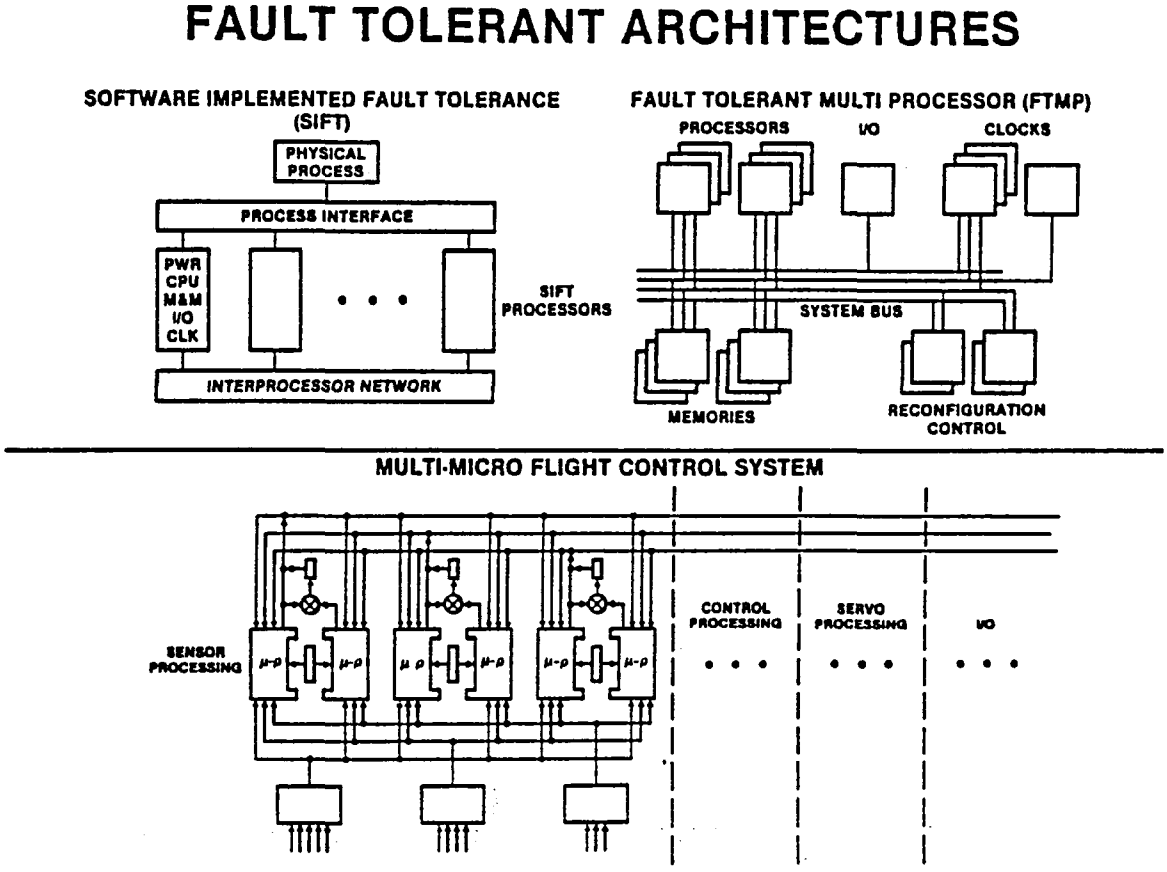

FIGURE 51

The FTMP concept is a multiprocessor computer that uses hardware replication for redundancy. For this system, high reliability is achieved by forming processors and memories into computer and memory triads connected by a triad of buses. Typically, a number of triads perform as a multi-processor. Each member of a single triad executes identical programs in synchronization with the other members. The triad can mask failures and detect the faulty module. If spares are available, faulty units are replaced. If no spare is available, the triad in the operating set is lost, but two spares are created from the two "good" modules. The multi-processor is designed so that sufficient capacity exists to conduct critical tasks with the remaining triads.

The M^2FCS is an ultra-reliable real-time control system based on two conceptual building blocks - the self checking pair (SCP) and the information transfer system (ITS). The SCP is comprised of two identical halves for redundancy and each half contains two processors - one for control and data processing; and the other, a bus interface unit, for communications with the rest of the system. The halves perform identical functions and are disconnected from the system if the outputs are not identical. The ITS is the heart of the fault tolerant system and allows the consistent exchange of data. It is tolerant of its own internal faults and protected against external hazards.

INTEGRATION TECHNOLOGY ASSESSMENT - UNITED STATES

An integrated systems approach of multiple aeronautical disciplines including flight controls is increasingly important to achieving improvement in aircraft performance and operational capability. Figure 52 depicts the disciplines and systems areas that are being considered on an integrated approach and indicates those areas in which there are major flight programs or R&D thrusts in the United States.

Considerable R&D on active controls technology has been conducted in the U.S. including several flight programs. Synergistic integration of aerodynamics and controls includes relaxed static stability to improve cruise performance (B-52 CCV and L-1011 test airplane) or maneuvering performance (F-16); maneuver load control to reduce maneuvering structural loads (B-52CCV) or to increase wing aspect ratio without adding structural weight (L-1011/500); and, envelope limiting (F-16). The HiMAT remotely piloted research vehicle (RPRV) included aeroelastic tailoring of the wing using composite materials.

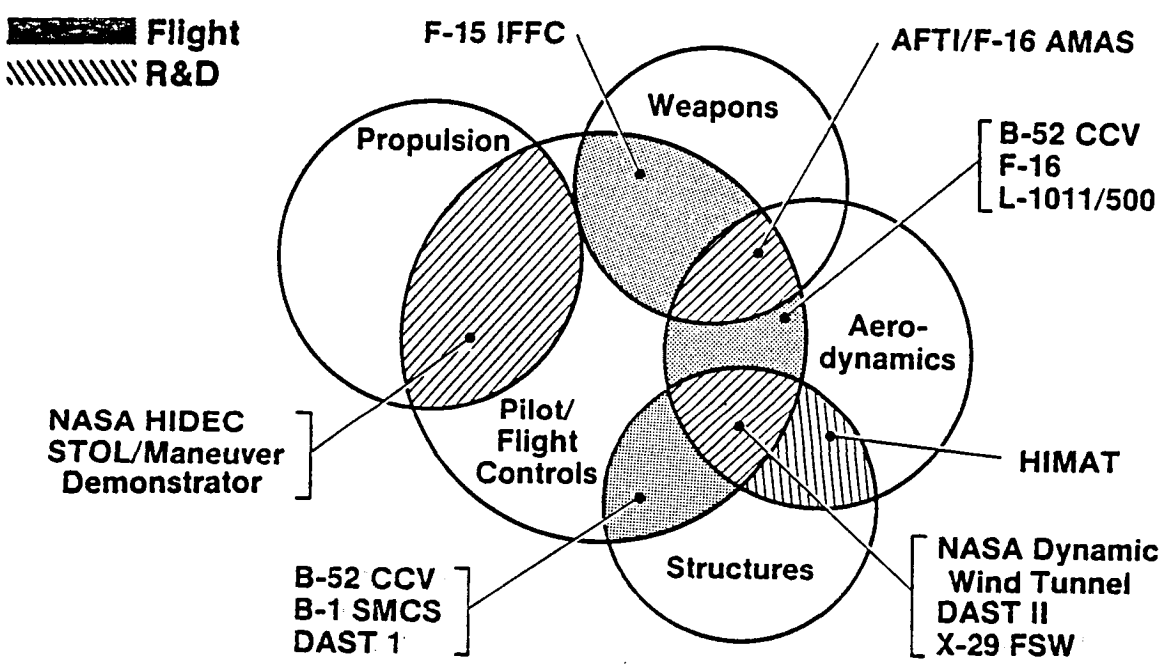

FIGURE 52

Structures and control integration flight programs include structural mode control (B-52 CCV for fatigue reduction and B-1 for ride control); and the DAST-1 RPRV (DAST stands for Drones for Aerodynamic and Structural Testing). Active flutter control involves the integration of aerodynamics, structures, and controls. NASA has conducted dynamic wind tunnel tests with several models including flutter of external stores; B-52 CCV flight tests; and, DAST-II supercritical wing active flutter control. The X-29 Forward Swept Wing (FSW) technology demonstrator being developed for DARPA by Grumman Aerospace has a very demanding control interaction with aeroelastic effects in wing structural divergence, flutter and structural dynamics/control coupling.

The integration of flight and propulsion systems control is relatively new except for conventional autopilot functions, such as Mach holds, and power approach compensators. The R&D thrusts (e.g., NASA Highly Integrated Digital Engine Controls, HIDEC, program) now consider more of the inner loop integration to optimize the propulsion systems performance (adaptive stall margin), and optimize flight path management. Propulsion and flight controls integration is of particular importance in the type of VSTOL and STOL fighter configurations of current interest to the Air Force. The STOL/Maneuver Demonstrator new initiative at AFWAL has a major objective to demonstrate the potential of integrated flight and propulsion control including thrust vectoring.

The other major system to be integrated with flight controls is the weapons systems. Significant improvements in weapons delivery has been demonstrated on the AFWAL F-15 Integrated Flight and Fire Control (IFFC) flight demonstration program. The IFFC system couples the fire control director to the flight control system to quickly null out tracking errors and reduce pilot workload. The joint AF/Navy/NASA AFTI-16 program is also investigating the integration of flight and fire control but also couples in aerodynamics with the use of direct lift and side force control. That part of the program is called Automated Maneuvering Attack System (AMAS) (Ref. 33).

The Air Force Advanced Tactical Fighter (ATF) program has directed the seven airframe companies conducting definition studies to consider the various integrated system concepts discussed above.

The subject "systems integration" is currently very popular. Two recent AGARD Guidance and Control Panel Symposia focused totally on the subject: "Guidance and Control Technology for Highly Integrated Systems" in Athens, Greece, October 1981 (Ref. 34); and, "Integration of Fire Control, Flight Control, and Propulsion Control Systems" in Toulouse, France, May 1983 (Ref. 35). Systems integration is beginning to be considered a discipline in and of itself. The Air Force and NASA are sponsoring several studies to develop the technology base, e.g., references 36 and 37. Considerable R&D effort, including flight research, is expected over the next several years to develop and validate the design tools and benefits.

UNITED KINGDOM

The Royal Aircraft Establishment focuses their activities on aircraft as total systems. Specific areas include system architecture, software technology, environmental hazards and compatibility issues, intersystem communications using fiber optics, and the management of complex systems. A major thrust at Bedford is the VSTOL Advanced Aircraft Controls (VAAC) program using a Harrier aircraft for guidance and control systems research including the integration of flight/propulsion/thrust vectoring and fire control.

Smiths Industries maintains a strong role in flight management systems (FMS) and displays and has an aggressive program for developing helicopter avionics. Smiths has delivered over 2500 HUD systems for various aircraft including the AV-8A&B, JA-37 and Jaguar; is developing the autothrottle for the 727 and 737-300; and offers a FMS for the A310 and has been selected by Boeing for the FMS on the E6A. They are engaged in R&D to develop an advanced fault-tolerant microprocessor FMS for the ACA aircraft.

Marconi Avionics is a leader in avionics and controls, at least in the UK if not throughout Europe. They developed the world's first "no back-up" DFBW flight control system for the Jaguar demonstration program and have developed flight control systems for the Concorde, Tornado, Harrier, Lynx, and YC-14, as well as the DFBW flap/slats for the A-310 and the 747 autothrottle. Near term activities include the development of the analog FBW system for the Italian AM-X and the DFBW system for the ACA. Their concept for DFBW systems is quadruplex because of the problems in proving two-fail operate with triplex architectures, but, in fact, are experimenting with the latter. With past experience on inter-computer links on the Jaguar and YC-14 programs, Marconi maintains a strong background in fiber optics for flight control systems. They have developed a fly-by-light system for the Airship Industries 600 Airship and are investigating similar schemes for the ACA Program.

FRANCE

The primary R&D thrusts currently being undertaken at the French government's aerospace research organization ONERA-CERT (Centre D'Etudes et de Recherches Toulouse) are flexible aircraft control, higher harmonic control for helicopters and robotics. The automatic controls group is organized as a consolidated R&D group for controls efforts with only about 30% of the tasks being directed on aeronautics and the remaining devoted to space, ocean and industrial related work. This arrangement promotes the

transfer and application of experience and knowledge across several fields. CERT has a strong interest in flexible aircraft control and is involved with Aerospatiale on an experimental program using an Airbus vehicle to obtain accurate flexible aircraft models. They are also working in the area of higher harmonic control for helicopters involving Aerospatiale. CERT has developed a six degree of freedom force sensor, which is being used for basic research in robotics and have two industrial robots for developing a learning algorithm for insertion and handling applications. The software involved is based on artificial intelligence algorithms. CERT maintains collaborative activities with NASA, both in 4-D guidance at LaRC and human factors at ARC.

In U.S. terms, CNRS-LAAS (Laboratoire D'Automatique et D'Analysis des Systems) can be described as National Science Foundation researchers with their own laboratory. They are an automatic control and systems analysis laboratory under the National Center for Scientific Research (CNRS) with about 320 people and a budget about evenly split between CNRS contributions and industry contracts. About 200 research personnel comprise research divisions which are divided into micro-electronics, automatics, data processing, robotics, biotechnology, environment and sensors. LAAS is involved in basic research in fault-tolerant systems with emphasis on the design and validation of dependable computing systems; software specifications and validation tools; and intersystem communications. Rather than applications, they focus on very basic issues, such as communication protocols, hypothesis/symbolic testing, system modeling and the development of tools and techniques.

Airbus Industries in France is aggressively pursuing advanced flight controls technology for their transport aircraft and have a concerted experimental flight program to support DFBW on the A-320 and their future TA-9, TA-11 and TA-12 family, now in the preliminary design stage. For the flight test program, the A-310 was flown to 42 percent mean aerodynamic chord (MAC) which put the airplane at the neutral stability point. They feel that 45% MAC is attainable with that airplane. They have conducted landing tests using only the rudder and stabilizer trim and tests are progressing to study the engineering and certification issues associated with the application of DFBW systems and side arm controllers on civil aircraft. Airbus maintains a strong program in cockpit displays.

Aerospatiale maintains a high degree of capability demonstrated by their laboratories and simulation facilities. They have the systems development

responsibility for Airbus. Their DFBW design concepts for the A-320 manifests an understanding of the issues involved as exhibited by the advanced architecture and verification methods applied.

WEST GERMANY

DFVLR (Deutsche Forschungs-und Versuchsanstalt fur Luft-und Raumfahrt) maintains an excellent R&T base activity for flight research applications, including research in reconfigurable controls for transport aircraft, sensor analytical redundancy, and digital actuators. Two BO-105 helicopters are currently being used in R&D activities - one devoted to DFBW experimentation, including side stick control, and the other involved in cockpit-crew interface systems research with emphasis on night operations. A major new thrust is ATTAS, which is a highly integrated flight research program involving air traffic control/flight management systems; crew interface and automation; and, DFBW technology including redundancy management and fault tolerance. A ground system is included to provide a facility for simulating the total ground/airborne environment. A VFW 614 will serve as a test bed aircraft modified initially with a single string digital channel using a Rolm computer.

INTEGRATION TECHNOLOGY ASSESSMENT - FOREIGN

The importance of an integrated systems approach including the flight controls and pilot interface is fully appreciated in Europe. Figure 53 depicts the disciplines and systems areas that are considered in an integrated approach and indicates those areas in which there are major flight programs or R&D thrust addressing integrated systems technology in Europe. Most of the flight programs to date have addressed active controls or control configured vehicle (CCV) concepts. Relaxed static stability (RSS) flights have already be conducted on the German F-104 CCV, French A-300 test bed and the Mirage-4000, and UK JAGUAR DFBW. The Israeli Lavi and the Japanese T-2 CCV will conduct RSS flights in the near future. The German DFVLR has conducted active control of structural modes in a dynamic wind tunnel. R&D programs leading to flight tests on integrated fire and flight control are underway for the Harrier and Tornado.

A major focus of the ACA/ACX is the integration of fire, flight, and active controls and flights will be conducted in the 1986/1987 time period. The UK VAAC program appears to be totally focused on the integration of fire, flight, and thrust vector conrol with particular emphasis on single pilot weapon delivery issues. The quality of the technology programs is excellent but somewhat narrower than in the US. A solid technology base is being established.

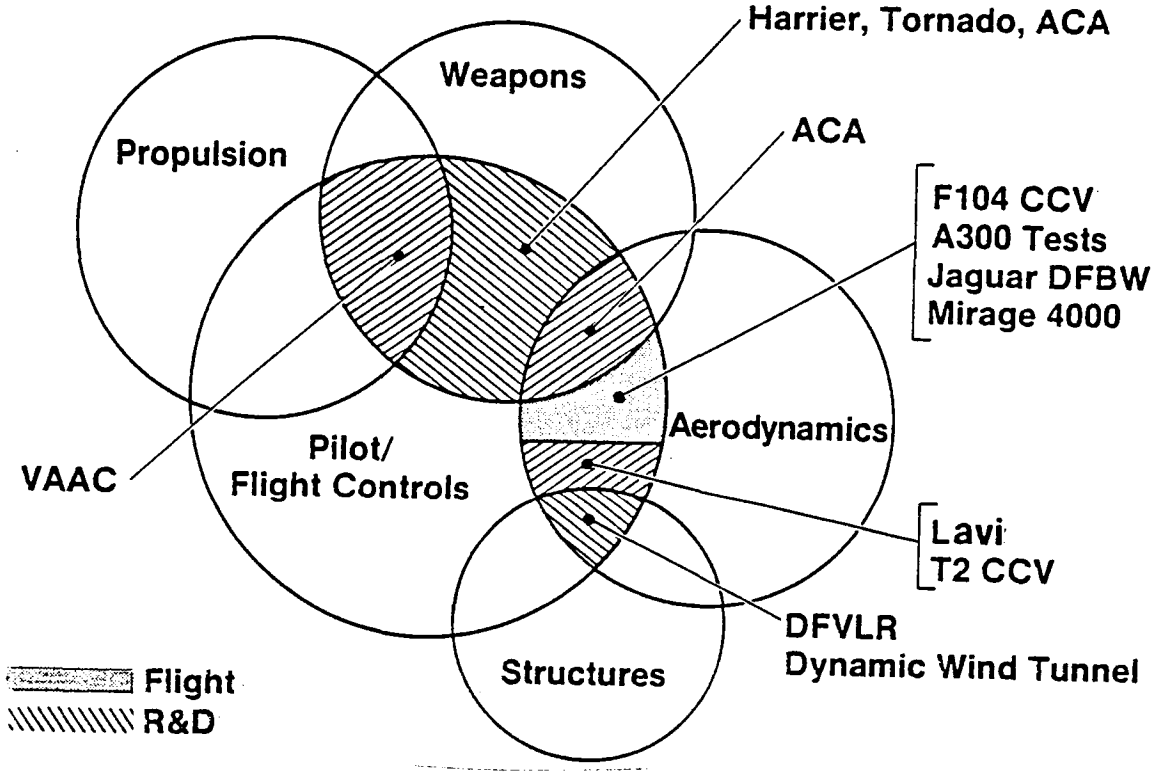

FIGURE 53

GENERAL OBSERVATIONS

AND

SUMMARY

OBSERVATIONS AND SUMMARY

The survey of flight crucial flight controls technology indicates that the era of digital-fly-by-wire (DFBW) applications has begun both in the U.S. and Europe. The newest military aircraft, being developed for the mid to late 1980s first flight, will have DFBW or possibly digital-fly-by-light (DFBL), most of which will retain some form of electrical back-up system. The flight safety reliability goal for these systems is generally about 10^{-7} failures per flight hour. Most of these military aircraft will incorporate flight crucial active controls functions, e.g., relaxed or negative static stability. The French seem to be the closest to committing to DFBW and relaxed static stability for a commercial transport.

The technology with potential to achieve 10^{-9} failures per a 10 hour flight reliability performance in a pure DFBW with no back-up system is still in the advanced R&D stage. The techniques and tools to design, verify, validate, and assure reliability for such systems is still being developed.

Highly integrated systems technology seems to be the most important current R&D thrust with flight crucial flight controls being at the core of such systems. Increased emphasis has been placed on improving reliability, maintainability, and survivability to assure high availability and dispatch reliability rather than just increased performance.

The survey clearly indicates that the Europeans are competitive with the U.S. Funding constraints tend to limit the breadth of work but in the areas pursued they are highly competent and at the leading edge of technology. The U.S. still appears to lead the technology in flight research and development programs but the gap is closing. There is a formidable systems technology base in Europe from which the U.S. can learn. It is clear that Europe is relying heavily on U.S. microelectronics technology. There is definitely a trend towards multinational ventures in advanced technology and development programs.

REFERENCES & BIBLIOGRAPHY

REFERENCES

1. Anderson, C.A.: F-16 Multinational Fighter, AGARD-AG-234, November 1978.

2. Harschburger, H. E. and Moomaw, R. F.: Experience with the F/A-18 Digital Flight Control System, 5th Digital Avionics Conference, Seattle, WA, November 1983.

3. Nelson, W. E., Jr.: F-20 Tigershark Flight Control System Development and Flying Qualities Review, SAE Aerospace Control and Guidance Committee Meeting, Seattle, WA, March 1983.

4. Lee, H. F.: Testing BITE on Boeing 757/767 in a Simulated Operational Environment, 5th Digital Avionics Conference, Seattle, WA, November 1983.

5. Devlin, T., et al: DC-9 Super 80 Digital Flight Guidance System, SAE C&G Committee, February 1982.

6. Poupard, R. E. and Sheridan, C. T.: Space Shuttle Applications, AGARDograph No. 258, May 1980.

7. Eslinger, R. C.: Fail-operational DAFCS for Business/Commuter Aircraft, SAE Paper 830714 Presented at Business Aircraft Meeting and Exposition, Wichita, KS, April 1983.

8. Corney, J. M.: Development of Multiple Redundant Flight Control Systems for High Integrity Applications, Aeronautical Journal, 1980.

9. Brady, T. V.: Assessment of Advanced Flight Control Systems Reliability & Maintainability Design, Qualification & Maintenance Requirements, USAAVRADCOM TR-82-D-1, May 1982.

10. Landy, R. J., et al: Integrated Flight and Fire Control, Presented at the AIAA G&C Conference, San Diego, CA, August 1982.

11. Mackall, D. A., et al: Qualification of the Flight Critical AFTI/F-16 Digital Flight Control System, AIAA 21st Aerospace Science Meeting, Reno, NV, January 1983.

12. Hills, A. D.: A310 Slat and Flap Control System Management and Experience, 5th Digital Avionics Conference, Seattle, WA, November 1983.

13. Korte, U.: Flight Test Experience with a Digital Integrated Guidance and Control System in a CCV Fighter Aircraft, AGARD CP 321, Lisbon, Portugal, October 1982.

14. Smith, T. D., et al: Ground & Flight Testing on the Fly-By-Wire Jaguar Equipped with a Full Time Quadruplex Digital Integrated Flight Control System, AGARD CP 321, Lisbon, Portugal, October 1982.

15. Marshall, R. E. W., et al: Jaguar Fly-By-Wire Demonstrator Integrated Flight Control System, 1981 Advanced Flight Control Symposium, Colorado Springs, CO, August 5-7, 1981.

16. Daley, E. and Smith, R. B.: Flight Clearance of the Jaguar Fly-By-Wire Aircraft, Royal Aeronautical Society Symposium, April 27, 1982.

17. Chun, R. K.: ARINC 429 Digital Data Communications on the Boeing 757 and 767 Commercial Airliners, 4th Digital Avionics Systems Conference, St. Louis, MO, November 1981.

18. Bondy, J. & Weaver, R.: Bus Schedule Change Issues in the On-Board Distributed Data System, 5th Digital Avionics Systems Conference (DASC), Seattle, WA, November 1983.

19. Bennett, D. B.: The V Bus Family: Candidate for Common Use with VLSI Technology, 5th Digital Avionics Systems Conference (DASC), Seattle, WA, November 1983.

20. Leonard, W. B. & Chow, K. K.: A New Bus Architecture for Distributed Avionic Systems, 5th Digital Avionics Systems Conference (DASC), Seattle, WA, November 1983.

21. Brock, L. D. & Hopkins, A. L. Jr.: On-board Communications for Active Control Transport Aircraft, 4th Digital Avionics Systems Conference (DASC), St. Louis, MO, November 1981.

22. Fraser, D. C. and Deyst, J. J.: A Fault-Tolerant Architecture Approach to Avionics Reliability Improvement, AGARD-CP-261, October 1979.

23. Cunningham, T. B. & Poyneer, R. D.: Sensor Failure Detection Using Analytical Redundancy, Proceedings of the Joint Automatic Control Conference, San Francisco, CA, June 1977.

24. Burns, R. C.: Multifunction Inertial Reference Assembly (MIRA), Final Technical Report, AFFDL-TR-78-105, September 1978.

25. Leudde, W. J.: The use of Separated Multifunctional Inertial Sensors for Flight Control, 4th Digital Avionics Systems Conference (DASC), St. Louis, MO, November 1981.

26. Sebring, D. L.: Redundancy Management of Skewed & Dispersed Inertial Sensors, 4th Digital Avionics Systems Conference (DASC), St. Louis, MO, Nov. 1981.

27. Weinstein, W.: Deployment of an Advanced Skewed Sensor Electronic (ASSET) System for Flight Control, Grumman Aerospace Corporation, Report NADC 76295-30, October 1976.

28. Toolan, W. K. & Zislin, A. M.: Development & Laboratory Test of an Integrated Sensory System (ISS) for Advanced Aircraft, 4th Digital Avionics Systems Conference (DASC), St. Louis, MO, November 1981.

29. Wensley, J. H., et al: SIFT - The Design and Analysis of a Fault Tolerant Computer for Aircraft Control, Proceedings of the IEEE, Vol. 66, No. 10, October 1978.

30. Hopkins, A. L., Smith, T. B. & Lola, J. H.: FTMP - A Highly Reliable Fault-Tolerant Multiprocessor for Aircraft, Proceedings of the IEEE, Vol. 66, No. 10, October 1978.

31. White, J. et al: A Multi-Microprocessor Flight Control System, AFWAL-TR-81-3044, May 1981.

32. Driscoll, K.: Multi-Microprocessor Flight Control System, 1982, 5th Digital Avionics Conference, Seattle WA, November 1983.

33. Bianco, A. J., Lt. Col.,and Swortzel, F. R.: AFTI/F-16 - An integrated System Approach to Combat Automation, 5th Digital Avionics Systems Conference (DACS), Seattle, WA, November 1983.

34. AGARD Conference Proceedings No. 314, Athens, Greece October 1981.

35. AGARD Conference Proceedings No. 349, Toulouse, France May 1983.

36. Stern, A. D.; Integrated Airframe/Propulsion Control System Architectures (IAPSA) Study, AIAA Guidance and Control Conference, Paper No. 83-2158, August 1983.

37. Joshi, D. S., et al; A Design Approach to Integrated Flight and Propulsion Control, SAE Aerospace Congress and Exposition, Paper No. 831482, October 3-6, 1983.

BIBLIOGRAPHY

This bibliography is not intended as an exhaustive literature search on the topics outlined, but rather as a listing of pertinent documents available to the authors during the course of the study. Thus, neither the inclusion nor omission of a particular document reflects on its importance or significance.

I. FLIGHT CONTROL SYSTEMS

Advanced Digital Optical Control System (ADOCS), Industry Briefing, August 17, 1983

Aircraft Flight Control Technology, Flight Critical Systems, Tri-service Topical Review, May 1982

Technical Description, F-16 Air Combat Fighter Vol. 8, Flight Control System, General Dynamics FIG. 060-8, August 1975

Abrams, C.: Exploratory Development Programs - Flight Control Systems, Briefing for SAE, Nov. 4, 1982

Anderson, C. A.: F-16 Multinational Fighter, AGARD-AG-234, November 1978

Corney, J. M.: Development of Multiple Redundant Flight Control Systems for High Integrity Applications, Aeronautical Journal, 1980

Comegys, G. L. & Hanson, G. R.: Integrated Flight Trajectory Control Development Program, AFWAL-TR-81-3077, August 1981

Daley, E. and Smith, R. B.: Flight Clearance of the Jaguar Fly-By-Wire Aircraft, Royal Aeronautical Society Symposium, April 27, 1982

Devlin, T., et al: DC-9 Super 80 Digital Flight Guidance System, SAE C&G Committee, February 1982

Driscoll, K.: Multi-Microprocessor Flight Control System, 1982, 5th Digital Avionics Conference, Seattle, WA., November 1983

Eslinger, R. C.: Fail-Operational DAFCS for Business Commuter Aircraft, SAE Technical Paper 830714, April 1983

Fuller, J. W. & Vincent, J. H.: Advanced V/STOL Flight Control System Technology Assessment, Systems Control Technology, Report No. 5339-250-1, May 1982

I. **FLIGHT CONTROL SYSTEMS** (Continued)

Harris, T. M.: Adaptive Flutter Suppression for Tactical Fighters Carrying External Stores, Briefing FDL 11-1-28-8, December 1982

Harschburger, H. E. & Moomaw, R. F.: Experience with the F/A-18 Digital Flight Control System, 5th Digital Avionics Systems Conference, November 1983, Seattle, WA

Hartmann, G. L.: Advanced Flight Control System Study, NASA CR 163117, November 1982

Hendrick, R., et al: Digitac II Digital Flight Control System Advanced Techniques Evaluation, AFFDL-TR-79-3140, December 1979

Hills, A. D.: A310 Slat and Flap Control System Management and Experience, 5th Digital Avionics Conference, Seattle, WA, November 1983

Korte, U.: Flight Test Experience with a Digital Integrated Guidance and Control System in a CCV Fighter aircraft, AGARD, CP 321, Lisbon, Portugal, October 1982

Mackall, D. A.: AFTI-16 Digital Flight Control System Experience, NASA CP 2296, October 1983

Mackall, D. A., et al: Qualification of the Flight Critical AFTI/F-16 Digital Flight Control System, AIAA 21st Aerospace Science Meeting, Reno, NV, January 1983

Marshall, R. E. W., et al: Jaguar Fly-By-Wire Demonstrator Integrated Flight Control System, 1981 Advanced Flight Control Symposium, Colorado Springs, CO, August 5-7, 1981

McGough, J. G., et al: Advanced Flight Control System Study, NASA CR 163120, November 1982

McKinlay, W. H.: Some Aspects of Flight Trajectory Control In Future Avionics Systems for Combat Aircraft, AGARD CP 349, Toulouse, France, May 1983

Nelson, W. E., Jr.: F-20 Tigershark Flight Control System Development and Flying Qualities Review, SAE Aerospace Control and Guidance Committee Meeting, Seattle, WA, March 1983

I. **FLIGHT CONTROL SYSTEMS** (Continued)

Niven, A. J.: Heavy Lift Helicopter Flight Control System, USAAMRDL-TR-77-40A, September 1977

Ostgaard, M. A.: Flight Control System Development, Past 25 Years and Next 25 Years Prediction, Briefing for SAE, 4 November 1982

Pope, R. E.: Another Look at Guidance & Control, Briefing at G&C Panel Symposium, Ottawa, Canada, May 1979

Schoenman, R. L.: 767 Flight Control System, SAE C&G Committee, February 1982

Smith, T. D., et al: Ground and Flight Testing on the Fly-By-Wire Jaguar Equipped with a Full Time Quadruplex Digital Integrated Flight Control System, AGARD CP 321, Lisbon, Portugal, October 1982

Szalai, K. L., et al: Digital Fly-By-Wire Flight Control Validation Experience, NASA Technical Memorandum 72860, December 1978

Szalai, K. L., et al: Design & Test Experience with a Triply Redundant Digital Fly-By-Wire Control System, AIAA Paper No. 76-1911, August 1976

White, J., et al: A Multi-Microprocessor Flight Control System, AFWAL-TR-81-3044, May 1981

Young J. T., Capt., et al: Design & Development of the Multifunction Flight Control Reference System, AGARD CP 349, Toulouse, France, May 1983

II. **INTEGRATED SYSTEMS**

Functional Integration, Panel Point Paper, NASA/DOD Topical Review, May 20, 1982

Integrated Application of Active Controls (IAAC) Technology To An Advanced Subsonic Transport Project - Test ACT System Description, NASA CR 172221, December 1983

Bangert, L. H., et al: Study of Integrated Airframe/ Propulsion Control System Architectures, Contract NAS1-16896, March 1983

Bianco, A. J., Lt. Col. & Swortzel, F. R.: AFTI/F-16 - An Integrated System Approach to Combat Automation, 5th DACS, Seattle, WA, November 1983

II. INTEGRATED SYSTEMS (Continued)

Burcham, F. W., et al: Flight Evaluation of Modifications to a Digital Electronic Engine Control System In An F-15 Airplane, NASA TM 83088, Prepared for 21st Aerospace Science Conference, Reno, NV, January 1983

Fraedrich, W. M.: Integration of Fire, Flight & Propulsion Control Systems, An Overview, Retrospective and Prospective, AGARD CP 349, Toulouse, France, May 1983

Joshi, D. S., et al: A Design Approach to Integrated Flight and Propulsion Control, SAE Aerospace Congress and Exposition, Paper No. 831482, October 3-6, 1983

Landy, R. J., et al: Integrated Flight and Fire Control, presented at the AIAA G&C Conference, San Diego, CA, August 1982

Landy, R. J., et al: Integrated Flight & Fire Control Demonstration of An F-15B Aircraft: System Development & Ground Test Results, AGARD CP 314, Athens, Greece, October 1981

Rambach, D.: Relations Between Engine Digital Control & Other Aircraft Systems, Briefing at G&C 36th Symposium, May 1983

Seabridge, A. G. & Edwards, R. A.: Integrated Power Plant Control Systems & Potential Performance Benefits, AGARD CP 349, Toulouse, France, May 1983

Stern, A. D. & Carlin, C. M.: Study of Integrated Airframe/Propulsion Control System Architectures, Contract NAS1-16942, March 1983

III. FAULT TOLERANCE & RELIABILITY

Fault Tolerance Design & Redundancy Management Techniques, AGARD-LS-109, September 1980

Avizienis, A.: Fault-Tolerance: The Survival Attribute of Digital Systems, Proceedings of IEEE, Vol. 66, No. 10, October 1978

Bannister, J. A., et al: Problems Related to the Integration of Fault Tolerant Aircraft Electronic Systems, NASA CR 165926, June 1982

Brady, T. V.: Assessment of Advanced Flight Control Systems Reliability & Maintainability Design, Qualification & Maintenance Requirements, USAAVRADCOM TR-82-D-1, May 1982

Bryant, L. A. & Stiffler, J. J.: Care III Phase II Report Maintenance Manual, NASA CR 165863, September 1982

Bryant, L. A. & Stiffler, J. J.: Care III Phase II Report User's Manual, NASA CR 165864, September 1983

Bryant, L. A. & Stiffler, J. J.: Care III Phase II Report Math Description, NASA CR 163566, November 1982

Fickeisen, F. C.: FAA Certification of B757/67 Avionic Software, SAE C&G Committee, March 9, 1983

Hecht, M. & Hecht, H.: Fault Tolerant Modules for SIFT, NASA CR 165874, July 1982

Laprie, J. C.: Dependable Computing In Europe, Journal of the Information Processing Society of Japan, April 1982

Lamport, L., et al: The Byzantine Generals Problem, ACM Transactions on Programming Languages and Systems, Vol. 4, July 1982

Melliar-Smith, P. M., & Lamport, L.: Synchronizing Clocks in the Presence of Faults, SRI International, July 1981, Rev. March 1982

Nagel, P & Skrivan, J. A.: Software Reliability: Repetitive Run Experimentation & Modeling, NASA CR-165836, February 1982

Rose, D. M., et al: Review & Verification of Care II Math Model & Code, NASA CR 166096, April 1983

Rose, J.: Cost and Benefits Design Optimization Model for Fault Tolerant Flight Control Systems, NASA CR 159281, August 1982

Sedmark, R. M. & Liebergot, H. L.: Fault Tolerance of A General Purpose Computer Implemented by Very Large Scale Integration, IEEE Transactions on Computers, Vol. C-29 No. 6, June 1980

Sisar, M.: Design of Analytical Failure Detection Using Secondary Observers, NASA TM-84284, August 1982

Stiffler, J. J., et al: Care III Phase II Report Test and Evaluation, NASA CR 163631, November 1982

III. **FAULT TOLERANCE & RELIABILITY** (Continued)

Szalai, K. J.: Flight Experience with Flight Control Redundancy Management, AGARD-LS-109, October 13-21, 1980

IV. **RECONFIGURABLE CONTROLS**

Self-Repairing Digital Flight Control System Study; Interim Report for AFFDL by GE, Binghamton, NY; May 1983

Berman, H. L., and Boudreau, J. A.: Dispersed and Reconfigurable Digital Flight Control System Study, AFFDL-TR-79-3125, Grumman Aircraft Company, December 1979

Chandler, P. R.: Self Repairing Flight Control System Reliability and Maintainability Program Plan; Industry Briefing by AFWAL, Feb. 9, 1984

Cunningham, T. B.: Failure Management Techniques for High Survivability, AGARD Lecture Series 109, Fault Tolerance Design and Redundancy Management Techniques, March 1981

Howell, W. E., et al: Restructurable Controls, NASA Conference Publication #2277 September 1982

McGough, et al: Digital Flight Control System Redundancy Study, AFFDL-TR-74-83, The Bendix Corporation, July 1974

Ness, W. G.: Integrated Assurance Assessment of a Reconfigurable Digital Flight Control System, NASA CR 170281, April 1983

V. **ACTIVE CONTROLS**

Active Flutter Suppression Using Optical Output Feedback Digital Controllers, NASA CR 165939, May 1982

Development and Flight Evaluation of an Augmented Stability Active Control Concept, NASA CR 166009, November 1982

Integrated Application of Active Controls (IAAC) Technology to an Advanced Subsonic Transport Project, NASA CR 3519, Feb 1982

Selected Advanced Aerodynamic and Active Control Concepts Development, NASA CR 3469, October 1981

V. **ACTIVE CONTROLS** (Continued)

Chipman, R. R., et al: Active Control of Aeroelastic Divergence, AIAA A82-30151, May 1982

Guinn, W. A.: Development and Flight Evaluation of an Augmented Stability Active Controls Concept, NASA CR 166009, November 1982

Lapins, M., et al: Piloted Simulator Evaluation of Relaxed Static Stability Fighter at High Angle-of-Attack, AIAA Paper 82-1295, August 1982

VI. **COMPUTERS**

Butler, R. W.: An Assessment of the Real-Time Application Capabilities of the SIFT Computer System, NASA TM 84482, April 1982

Hopkins, A. L., et al: FTMP - A Highly Reliable Fault-Tolerant Multiprocessor for Aircraft, Proceedings of the IEEE, Vol. 66, No. 10, October 1978

Melliar-Smith, P. M.: Hierarchical Specification of the SIFT Fault-Tolerant Flight Control System, SRI TR CSL-123, March 1981

Shapiro, A. J.: Advanced Design & Performance Optimization Techniques Utilized to Develop the F-111 Weapons/Navigation Computer (WNC), AGARD CP 321, Lisbon, October 1982

Smith, T. B., et al: A Fault-Tolerant Microprocessor Architecture for Aircraft, Interim Report NASA CR 165911, 1978

Wensley, J. H.: Design Study of SIFT Computer, NASA CR 3011, June 1982

Wensley, J. H., et al: SIFT - The Design and Analysis of a Fault Tolerant Computer for Aircraft Control, Proceedings of the IEEE, Vol. 66, No. 10, October 1978

VII. **DATA BUSSING**

Bennett, D. B.: The V Bus Family: Candidate for Common Use with VLSI Technology, 5th Digital Avionics Systems Conf (DASC), Seattle, WA, November 1983

Bondy, J. & Weaver, R: Bus Schedule Change Issues in the On-Board Distributed Data System, 5th Digital Avionics Systems Conf (DASC), Seattle, WA, November 1983

VII. **DATA BUSSING** (Continued)

Brock, L. D. & Hopkins, A. L., Jr.: On-board Communications for Active Control Transport Aircraft, 4th Digital Avionics Systems Conf. (DASC), St. Louis, MO, November 1981

Chun, R. K.: ARINC 429 Digital Data Communications on the Boeing 757 and 767 Commercial Airliners, 4th Digital Avionics Systems Conference, St. Louis, MO, November 1981

Fraser, D. C. and Deyst, J. J.: A Fault-Tolerant Architecture Approach to Avionics Reliability Improvement, AGARD-CP-261, October 1979

Leonard, W. B. & Chow, K. K.: A New Bus Architecture for Distributed Avionic Systems, 5th Digital Avionics Systems Conf (DASC), Seattle, WA, November 1983

Relis, M. J. & Urbanik, T. J.: A Fiber Optic Receiver for a Digital Data Link in the AV-8B Aircraft, AIAA Paper 81-2269, November 1981

Synder, F. B.: Control Media Mechanization Study, USAAVRADCOM TR-81-D-31, May 1982

Snyder, F. B. & Giri, R. R.: Fiber Optic Technology for Data Transmission in the Helicopter Environment, AHS Preprint A-81-37-11-2000, May 1981

VIII. **ACTUATION SYSTEMS**

Airplane Actuation Trade Study, Boeing Briefing to Industry Reps, November 13, 1979

Electrically Commanded Actuation Controls, HR Textron Briefing to Boeing, April 1978

SOA Flight Control Actuators for Helicopters, HR Textron Briefing to Bell Helicopter, August 12, 1982

Guinn, K. F.: Advanced Rotor Actuation Concepts, USAAVRADCOM TR-82-D-21, December 1982

Selna, T. S. & Mattos, F.: General Development of Flight Control Actuation Systems in the U.K., SAE A-6 Committee Meeting, April 28, 1982

Wyllie, C. E.: Are Actuation Systems Ready for all Electric Aero Spacecraft, Drives & Controls International, April/May 1982

IX. SENSORS AND TRANSDUCERS

Burns, R. C.: Multifunction Inertial Reference Assembly (MIRA), Final Technical Report, AFFDL-TR-78-105, September 1978

Caglayan, A. K. & Lancraft, R. E.: An Aircraft Sensor Fault Tolerant System, NASA CR 165876, April 1982

Cunningham, T. B. & Poyneer, R. D.: Sensor Failure Detection Using Analytical Redundancy, Proceedings of the Joint Automatic Control Conf., San Francisco, CA, June 1977

Flynn, S. W. & Smoot, B. J.: Development & Testing of A Digital/Optical Linear Position Transducer, USAAVRADCOM TR-83-D-3, July 1983

Leudde, W. J.: The Use of Separated Multifunctional Inertial Sensors for Flight Control, 4th Digital Avionics Systems Conf. (DASC), St. Louis, MO, November 1981

Sebring, D. L.: Redundancy Management of Skewed & Dispersed Inertial Sensors, 4th Digital Avionics Systems Conf. (DASC), St. Louis, MO, November 1981

Toolan, W. K. & Zislin, A. M.: Development & Laboratory Test of an Integrated Sensory System (ISS) For Advanced Aircraft, 4th Digital Avionics Systems Conf. (DASC), St. Louis, MO, November 1981

Weinstein, W.: Deployment of an Advanced Skewed Sensor Electronic (ASSET) System for Flight Control, Grumman Aerospace Corporation, Report NADC 76295-30, October 1976

X. MISCELLANEOUS

Blake, B.: Research Opportunities for Rotorcraft, NASA CP 2296, October 1983

Crawford, C. C., Jr.: JVX, What An Opportunity, Vertiflite, July/August 1982

Cunningham, T. B.: Opportunities for Aircraft Controls Research, NASA CP 2296, October 1983

Flynn, G. R.: Future Flight Management Systems, DOC. NO. DG-51481TN, Boeing Commercial Airplane Company, May 1982

D'Avino, D. S. & Spiegel, S. S.: LHX Avionics Architecture, Technical Report by SEMCOR Inc., under Contract DAAK80-79-C-0258, February 1981

X. **MISCELLANEOUS** (Continued)

Iliff, K. W. & Maine, R. E.: Practical Aspects of Modeling Aircraft Dynamics from Flight Data, NASA CP 2296, October 1983

Lambregts, A. A.: Functional Integration of Vertical Flight Path and Speed Control Using Energy Principals, NASA CP 2296, October 1983

Landis, K. H. & Aiken, E. W.: Assessment of Various Side Stick Controller/Stability & Control Augmentation Systems for Night NOE Flight Using Piloted Simulation, Presented at 38th Annual AHS Meeting, Palo Alto, CA, April 14, 1982

Lee, H. F.: Testing BITE on Boeing 757/767 in a Simulated Operational Environment, 5th Digital Avionics Conference, Seattle, WA, November 1983

Marner, G. R. & Pruyn, R. R.: LHX System Design for Improved Performance and Affordability, Presented at 8th European RC Forum, September 1982

Meyer, G.: Non-Linear Systems Approach to Control System Design, NASA CP 2296, October 1983

Poupard, R. E. & Sheridan, C. T.: Space Shuttle Applications, AGARDograph No. 258, May 1980

Schneider, J. J.: History of V/STOL Aircraft Part II, Vertiflight May/June 1983

Wernicke, R. K. & Fischer, J. N.: Evaluation of Advanced RC Configurations for Emerging Military Applications, Presented at 37th Annual Forum of AHS, May 1981

ABBREVIATIONS

ADOCS - Advanced Digital/Optical Control System

ARC - Ames Research Center (NASA)

ATTAS - Advanced Technology Transport Airborne Simulator

BITE - Built-In Test Equipment

CCV - Control-Configured Vehicle

CRT - Cathode Ray Tube

DFBW - Digital Fly-By-Wire

EMI - Electromagnetic Interference

EMP - Electromagnetic Pulse

Fail-Op - Fail Operate

Fail-Op^2 - Dual Fail Operate

FBW - Fly-By-Wire

FMEA - Failure Modes and Effects Analysis

FRG - Federal Republic of Germany

HiMAT - Highly Maneuverable Aircraft Technology

JVX - Joint Vehicle - Experimental

LaRC - Langley Research Center (NASA)

LHX - Light Helicopter - Experimental

PFCS - Primary Flight Control System

R&D - Research and Development

RM - Redundancy Management

RPRV - Remotely Piloted Research Vehicle

RSS - Relaxed Static Stability

SAS/CAS - Stability/Command Augmentation System

STOL - Short Take-Off and Landing

UK - United Kingdom

USB - Upper Surface Blowing

V/STOL - Vertical or Short Take-Off and Landing

1. Report No.	2. Government Accession No.	3. Recipient's Catalog No.
NASA CR-172332		

4. Title and Subtitle	5. Report Date
Technology Review of Flight Crucial Flight Control Systems	April 1984
	6. Performing Organization Code
7. Author(s)	8. Performing Organization Report No.
H. A. Rediess & E. C. Buckley	HR 78500037
9. Performing Organization Name and Address	10. Work Unit No.
HR Textron Inc. 2485 McCabe Way Irvine, California 92714	11. Contract or Grant No. NAS1-17403
12. Sponsoring Agency Name and Address	13. Type of Report and Period Covered Contractor
National Aeronautics and Space Association Langley Research Center Hampton, Virginia 23665	14. Sponsoring Agency Code

15. Supplementary Notes

Langley Technical Monitor: Cary R. Spitzer

16. Abstract

This report provides the results of a technology survey in flight crucial flight controls conducted for NASA Langley Research Center as a data base for planning future research and technology programs. Free world countries were surveyed with primary emphasis on the United States and Western Europe because that is where the most advanced technology resides. The survey includes major contemporary systems on operational aircraft, R&D flight programs, advanced aircraft developments, and major research and technology programs. The survey was not intended to be an in-depth treatment of the technology elements, but rather a study of major trends in systems level technology. The information was collected from open literature, personal communications and a tour of several companies, government organizations and research laboratories in the United States, United Kingdom, France, and the Federal Republic of Germany.

17. Key Words (Suggested by Author(s))	18. Distribution Statement
Flight controls, Flight control systems, Digital fly-by-wire, Digital flight controls, Aircraft control systems	Unclassified - Unlimited

19. Security Classif. (of this report)	20. Security Classif. (of this page)	21. No. of Pages	22. Price
Unclassified	Unclassified	89	

N-305

For sale by the National Technical Information Service, Springfield, Virginia 22161