NASA-TM-85927

NASA Technical Memorandum 85927

NASA-TM-85927 19840014517

FOR REFERENCE

NOT TO BE TAKEN FROM THIS ROOM

A Formulation and Analysis of Combat Games

M. Heymann, M.D. Ardema, and N. Rajan

April 1984

LIBRARY COPY

MAY 8 1984

LANGLEY RESEARCH CENTER
LIBRARY, NASA
HAMPTON, VIRGINIA

NASA

National Aeronautics and
Space Administration

62 1 1 RN/NASA-TM-85927
DISPLAY 62/2/1
84N22585*# ISSUE 13 PAGE 1935 CATEGORY 8 RPT#: NASA-TM-85927
A-9678 NAS 1.15:85927 84/04/00 40 PAGES UNCLASSIFIED DOCUMENT
UTTL: A formulation and analysis of combat games
AUTH: A/HEYMANN, M.; B/ARDEMA, M. D.; C/RAJAN, N. PAA: A/(Technion - Israel Inst. of Tech.); C/(Stanford Univ., Calif.)
CORP: National Aeronautics and Space Administration. Ames Research Center,

MAJS: /*COMBAT/*DECISION THEORY/*DIFFERENTIATORS/*GAME THEORY/*TARGETS/*TURRET/*WARFARE
MINS: / COMMAND AND CONTROL/ EVASIVE ACTIONS/ MILITARY OPERATIONS/ PURSUIT TRACKING/ WAR GAMES
ABA: E.A.K.
ABS: Combat which is formulated as a dynamical encounter between two opponents, each of whom has offensive capabilities and objectives is outlined. A target set is associated with each opponent in the event space in which he endeavors to terminate the combat, thereby winning. If the combat terminates in both target sets simultaneously, or in neither, a joint capture or a draw, respectively, occurs. Resolution of the encounter is formulated as a combat game: as a pair of competing event constrained differential games. If exactly one of the players can win, the optimal strategies are determined from a resulting constrained zero sum differential game. Otherwise the optimal strategies are computed from a
ENTER:

NASA Technical Memorandum 85927

A Formulation and Analysis of Combat Games

M. Heymann
M. D. Ardema
N. Rajan, Ames Research Center, Moffett Field, California

National Aeronautics and
Space Administration

Ames Research Center
Moffett Field, California 94035

N84-22585#

A FORMULATION AND ANALYSIS OF COMBAT GAMES

M. Heymann,* M. D. Ardema, and N. Rajan†

Ames Research Center

SUMMARY

Most investigations of combat problems by differential game theory have focused on analysis of deterministic, two-person, zero-sum, perfect-information pursuit-evasion games. This framework is quite suitable for situations wherein the pursuer-evader roles are well defined by the nature of the problem and the evader has no offensive capability with which to threaten the pursuer to affect the outcome. The formulation is, however, an inadequate one to model combat between two (or more) opponents both (or all) of whom have offensive capabilities and offensive objectives. An obvious example of such a situation is air-to-air combat. The few attempts to analyze this more general combat problem have used either the concept of role-determination or, more recently, that of two-target differential games. Neither of these approaches, however, has led to a complete and consistent conceptual definition and corresponding mathematical theory of combat differential games. It is our purpose in this paper to formulate and illustrate such a theory.

We begin with a discussion of the qualitative features of combat games between two aggressive opponents; this discussion indicates the rich variety of behavior present in such games and makes clear the inadequacy of the pursuit-evasion assumption, with or without role determination, for modeling combat. We then propose a mathematical formulation of a <u>combat game</u> between two opponents with offensive capabilities and offensive objectives in a deterministic setting. Resolution of the combat essentially involves solving two differential games with state constraints. Depending on the game dynamics and parameters, the combat can terminate in one of four ways: (1) the first player wins, (2) the second player wins, (3) a draw (neither wins), or (4) joint capture. In the first two cases, the optimal strategies of the two players are determined from suitable zero-sum games, whereas in the latter two the relevant game is nonzero-sum. Next, to avoid certain technical difficulties, the concept of a δ-combat game is introduced.

To illustrate the definition, formulation, and solution of combat games, an example, called the <u>turret game</u>, is analyzed in detail. This game may be thought of as a highly simplified model of air combat, yet it is sufficiently complex to exhibit a rich variety of combat behavior, much of which is not found in pure pursuit-evasion games.

---

*Senior NRC Associate on sabbatical leave from Technion, Israel Institute of Technology, Haifa, Israel.

†Research Associate, Aeronautics and Astronautics Department, Stanford University, Stanford, California.

1. INTRODUCTION

By a game of combat we intuitively refer to an encounter between two hostile adversaries, or players, each of whom wishes to destroy or capture the other, while, if possible, ensuring his own survival. A player who succeeds in capturing his opponent is said to win the game. If a player is unable to win, he will attempt to prevent his opponent from winning and, if he is unable to do so, he will try to make his opponent's win as difficult or as costly as possible.

An application that immediately comes to mind and that was one of the main incentives for investigating games of combat, is the aerial combat problem in which there is a duel between two (or even more) maneuvering aircraft. Various situations can be visualized; for example, a missile in pursuit of a plane, a fighter in pursuit of a bomber, a duel between two fighter aircraft.

In the simplest manifestation of a combat game, one of the players has no offensive capabilities so that he can never win in the above sense. Thus, the offensive player becomes the pursuer, and the inoffensive opponent becomes the evader. The resultant pursuit-evasion problem becomes what is sometimes called a game of survival (see e.g., ref. 1). The evader attempts to prevent capture or, if this is not possible, to maximize the pursuer's cost of attaining his goal; the pursuer endeavors to capture at minimum cost. The special (but important) case in which the cost functional is the time to capture, has sometimes been referred to as a game of pursuit-evasion (ref. 1).

The early studies of combat problems focused almost entirely on the above mentioned framework in which the two players have the clearly defined and opposing roles of pursuer and evader, or minimizer and maximizer. There are immediate applications of those studies in such problems as missile versus aircraft or fighter versus bomber.

The generally accepted mathematical framework for formulating and solving pursuit-evasion problems is the theory of differential games due to Isaacs (ref. 2). Specifically, the game consists of a dynamical system whose state transition is governed by a set of n ordinary differential equations

$$\frac{dx}{dt} = f(t,x,u,v) \quad , \tag{1}$$

where $x = x(t) \in \mathscr{R}^n$ is the state, $u = u(t) \in U \subset \mathscr{R}^m$ and $v = v(t) \in V \subset \mathscr{R}^p$ are the two players' controls, and $x(t_o) = x_o$ is the initial state. There is associated with the game a cost functional

$$J(u,v,x_o,t_o) = g[x(\bar{t}),\bar{t}] + \int_{t_o}^{\bar{t}} h[t,x(t),u(t),v(t)]dt \quad , \tag{2}$$

where $\bar{t}$ $(<\infty)$ is a free or fixed termination time. Typically, player u attempts to minimize the cost J, whereas v tries to maximize it. Various additional assumptions and constraints can be imposed on the problem to suit specific requirements.

In games of survival and of pursuit-evasion the termination time is free and is determined by a capture condition; that is, a state constraint that is imposed on the problems as follows:

$$x(t) \notin \mathscr{T} \subset \mathscr{R}^n \quad \forall \quad t_o \leq t < \bar{t} \tag{3}$$

and

$$x(\bar{t}) \in \mathscr{T} \ . \tag{4}$$

Here $\mathscr{T}$ is the target or capture set and $\bar{t}$, defined through equations (3) and (4), is the capture time. The game of pursuit-evasion is thus the special case of the above framework in which $g = 0$ and $h = 1$ with the cost being the time to capture $(\bar{t} - t_o)$. It is then natural to refer to the minimizing player u as the pursuer and to the maximizing player v as the evader.

Much research has been done on games of survival and games of pursuit-evasion within the general framework of differential game theory (see, e.g., refs. 1, 3-5). The early use of differential games in the modeling and analysis of aerial combat problems is reviewed in reference 6. Widely investigated models, although highly idealized, for pursuit-evasion analysis are the homicidal chauffeur game (refs. 2, 7, 8), and its generalization, the game of two cars. The latter was used as a model for aerial combat analysis in a variety of studies; see, for example, references 9-14 as well as the general survey article reference 15. More recently, various generalizations of the game of two cars were used for analysis of aerial pursuit-evasion to accommodate variable speed and other aircraft capabilities (refs. 16-19). Also, special techniques were developed and examined to facilitate computation and to alleviate some of the difficulties associated with high dimensionality.

It was realized even in the early stages (ref. 6), however, that the pursuer-evader model is inadequate for situations such as fighter versus fighter combat, in which there is no justification for an arbitrary a priori role assignment of pursuer and evader. This difficulty led to much confusion in efforts to reconcile the differential game methodology with intuition, based on the perceived experiences in actual combat situations. For example, it was stated in reference 6 that a multiple criterion may be required to formulate these aerial combat encounters correctly and that role reversals during a given encounter might (and should) occur. In other studies, the idea was promoted that the central issue is that of role determination (refs. 12, 20). Basically, the method that was proposed for resolution of the role-assignment problem was to examine two pursuit-evasion problems — one with player A as pursuer and player B as evader and the other with the roles reversed. From the outcomes of the two games an assignment of roles should then result.

Realizing that the pursuit-evasion framework is unsuitable for the analysis of combat problems, Pachter and Getz (refs. 21, 22) introduced (following the approach proposed by Blaquiere et al. (ref. 23) and Getz and Leitmann (ref. 24)) the concept of a two-target game. In this setting each player has a target-set and attempts to drive the state into his own target set without being first driven to the target set of his opponent. Pachter and Getz confined their attention exclusively to the problem of capturability in a two-target environment, that is, to the "game of kind" (in Isaacs' terminology). This analysis is based on Isaacs' (controversial) technique of employing barrier and other "singular" surfaces (ref. 2) to partition the state space into regions where one or the other player can win the game. Although this approach appears to be plausible in very low dimensional problems, it becomes rapidly infeasible as the dimensionality increases, especially in the two-target case where

added complexity arises. Indeed, Pachter and Getz made some major simplifications in their target-set geometries to overcome essential difficulties with dimensionality and render the analysis tractable in their investigations of the two-target homicidal chauffeur game (ref. 21) and the two-target game of two cars (ref. 22). A further recent study that combines the role assignment point of view with the two-target idea has been reported in reference 25.

Although the intuitive two-target idea is definitely a convincing conceptual setup for the combat model, the game formulation problem and the problem of strategy determination and analysis have not been addressed in the literature to date, apparently because of the problem's perceived complexity. Thus, such generally erroneous ideas as role reversal and role assignment still prevail in the current literature and the players' actual optimal (or, at least, winning) strategies in combat situations remain obscure and unexplored. In the present paper we examine the combat problem from a strategy-analysis point of view.

2. QUALITATIVE FEATURES OF COMBAT GAMES

In an ordinary pursuit-evasion problem, the termination of the game (i.e., capture) is determined, as we have seen earlier, by the capture condition specified by equations (3) and (4) (which can also be stated in terms of equality or inequality constraints). The capturability issue constitutes the "game of kind" (ref. 2), and for a given initial state the problem is whether the pursuer can actually force capture or termination. The question of strategy, that is, of how to accomplish capture when possible or how to prevent it (or delay it) constitutes the game of degree (ref. 2).

In the two-target combat model, with targets, say, $\mathscr{T}_u$ and $\mathscr{T}_v$, the termination condition is

$$x(t) \notin \mathscr{T} = \mathscr{T}_u \cup \mathscr{T}_v \quad \forall \quad t_o \le t < \bar{t} , \tag{5}$$

and

$$x(\bar{t}) \in \mathscr{T} , \tag{6}$$

where $\mathscr{T}_u$ is the target associated with player u, and $\mathscr{T}_v$ is the target associated with v. If $x(\bar{t}) \in \mathscr{T}_u$ but $x(t) \notin \mathscr{T}_v$ for all $t_o \le t \le \bar{t}$ we say that player u wins the game, whereas if $x(\bar{t}) \in \mathscr{T}_v$ and $x(t) \notin \mathscr{T}_u$ for $t_o \le t \le \bar{t}$ we say that v wins. If $\mathscr{T}_u \cap \mathscr{T}_v \ne \phi$ and

$$x(\bar{t}) \in \mathscr{T}_u \cap \mathscr{T}_v , \tag{7}$$

we say that the game ends in <u>joint capture</u>. Finally, if $x(t) \notin \mathscr{T}$ for all $t_o \le t < \infty$ we say that the game ends in a <u>tie</u> or <u>draw</u>.

In the pursuit-evasion game, the pursuing player wishes to lead the game to termination and, if he can, do so as quickly as possible. The evading player attempts to prevent termination or to delay it if prevention is impossible. In contrast, in the two-target problem the players' objectives are more complicated. In principle, both want to terminate the game but in different parts of $\mathscr{T}$. Player u wants to

terminate in $\mathscr{T}/\mathscr{T}_v$ (i.e., in $\mathscr{T}$ excluding $\mathscr{T}_v$), and player v wants to terminate in $\mathscr{T}/\mathscr{T}_u$.

To see how these conflicting objectives affect the players' strategies and to gain some insight into the actual situation, let us examine, qualitatively, a number of possible cases. Suppose for a moment that the capability of each player to evade his opponent's target is independent of, and decoupled from, his capability to pursue his opponent. (Air combat between two aircraft with actively guided air-to-air missiles is an example.) Each player would then play two simultaneous and independent pursuit-evasion games: one is an offensive game in which he would try to capture his opponent, the other a defensive game in which he would try to evade his opponent's weapons. The pursuit-evasion game that terminates first would determine the winner.

Suppose now that with each of the above mentioned pursuit games we associate a cost functional

$$J_i = g_i[x(\bar{t}_i),\bar{t}_i] + \int_{t_o}^{\bar{t}_i} h_i[t,x(t),u(t),v(t)]dt \qquad i = u,v \ ,$$

where $\bar{t}_i$ is the termination time of game i. In game u, player u wishes to minimize, and player v wishes to maximize J_u; in game v, player v is the minimizer and u the maximizer. Suppose that if the competition between the two games is ignored, it turns out that $\bar{t}_u$ is greater than $\bar{t}_v$ as optimal termination times. By this optimality criterion it would be concluded, quite possibly erroneously, that player v is the winner of the combat. Thus, even in this elementary example, we are forced to add a constraint to each of the two games to account for the existence of the other, that is, for $i = u,v, x(t) \notin \mathscr{T}/\mathscr{T}_i$ for all $t_o \le t < \bar{t}_i$ (where $\mathscr{T}_i$ denotes the target set of the game i). This constraint introduces a coupling between the two competing games that affects the players' strategies. A particularly interesting and important cost criterion is obtained when $g_i = 0$ and $h_i = 1$, $i = u,v$, that is, when both games assume a time-optimality criterion. Let $J_i^* = \bar{t}_i$, $i = u,v$ be the optimal times obtained in the two pursuit games where, in each game, the pursuer is the minimizer and the evader is the maximizer. Clearly, if $\bar{t}_u < \bar{t}_v$ then in game v the constraint $x(t) \notin \mathscr{T}/\mathscr{T}_v$ for all $t_o \le t < \bar{t}_v$ is violated and the constrained game v has no feasible solutions. Obviously u is the winning player.

Now, in the more general case, the players cannot perform their evasive maneuvers, that is, they cannot stay out of range of their opponents' weapon envelopes (capture sets), independently of their offensive maneuvers to capture the opponent. Indeed, there is, typically, a trade-off between the two objectives of survival and capture of the opponent, and the players have to play their strategies accordingly.

To illustrate the situations that might occur, let us consider two vehicles maneuvering in a horizontal plane (fig. 1). The arrows describe the vehicles' instantaneous heading, the cones the instantaneous envelopes of their weapons (fixed with respect to their headings) and the vertices of the cones are their instantaneous positions. We assume the typical situation that each player's maximum turn rate and speed are mutually dependent, specifically that the faster they move the slower they are able to turn, and conversely.

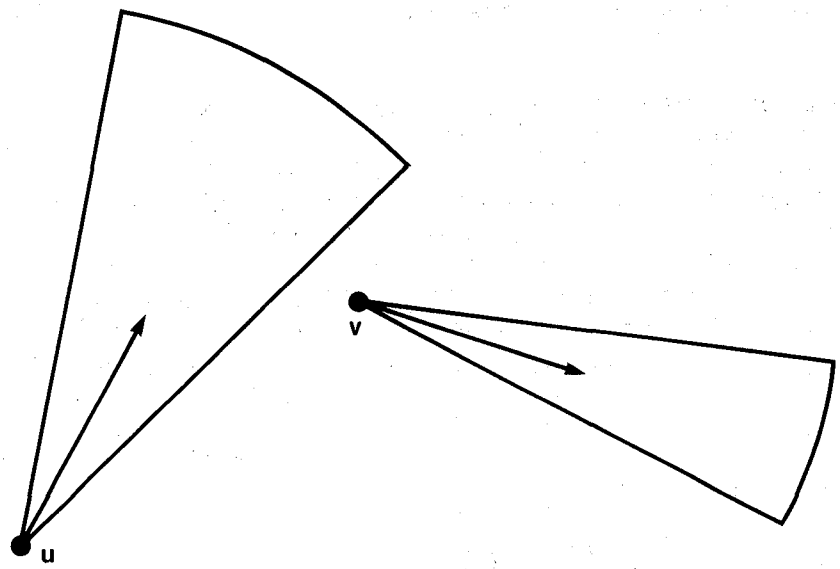

Figure 1.- Maneuvering vehicles.

Suppose that player v initially is in a vulnerable position (see fig. 1) such that by a slight turn of player u, v might enter u's weapon envelope, and further suppose that v is more maneuverable in terms of turn rate and speed than u. If v adopts a pure evasive maneuver and u pursues, two outcomes are possible: either v gets captured quickly or he evades successfully. If he can avoid capture initially, then presumably he can capture u in due time by virtue of his superior maneuverability. In the other case, even though v cannot avoid initial capture by u if he adopts pure (inoffensive) evasion, he may still be able to win the game by performing the offensive maneuver of turning his own target at u, thereby capturing u before u captures him. More generally, v may have to perform a composite (offensive-defensive) maneuver wherein he turns his target at u while moving away from u's target just enough to avoid capture himself. Thus, player v might be able to win the game by a composite strategy even though he would lose it by playing pure evasion.

It is also of interest to examine the optimal play of player u under the assumption that v can win with an optimal composite strategy. In spite of his eventual capture, u should adopt an offensive behavior since by turning his weapon at v he forces v to slow down v's offensive move in order to survive u's threat, thereby at least delaying u's capture. In this situation, roles of pursuer and evader cannot usefully be assigned to the two players.

Thus, it is easy to understand that in general, analysis of pure pursuit-evasion problems, with or without role-determination analyses, reveals little, if any, information about the possible outcomes and optimal strategies of a combat game. In fact, it may be expected that misleading conclusions will be frequently drawn. It is clear that a new and fundamentally different approach to the problem is required.

3. FORMULATION OF A COMBAT GAME

Consider a system described by a set of n ordinary differential equations,

$$\frac{dx}{dt} = f(t,x,u,v) \ , \tag{8}$$

with initial time t_o and initial state $x(t_o) = x_o$. The controls of the two players are measurable functions taking values in compact subsets $U \subset \mathcal{R}^m$ and $V \subset \mathcal{R}^p$, respectively.

Associated with the combat problem are two subsets $\bar{\mathcal{T}}_u$ and $\bar{\mathcal{T}}_v$ in $\mathcal{R}^{n+1}$, the <u>(extended) targets</u> or <u>(extended) capture sets</u> of the players. We shall assume that $\bar{\mathcal{T}}_u$ and $\bar{\mathcal{T}}_v$ are the closures of some open subsets in $\mathcal{R}^{n+1}$ and that there exists a time $T^* > t_o$ such that for all $x \in \mathcal{R}^n$ and all $t \geq T^*$, $(t,x) \in \bar{\mathcal{T}}_u \cap \bar{\mathcal{T}}_v$.

Combat starts at $t = t_o$ and continues as long as

$$[t,x(t)] \notin \text{int}\, \bar{\mathcal{T}}$$

where $\bar{\mathcal{T}} := \bar{\mathcal{T}}_u \cup \bar{\mathcal{T}}_v$ is the combat's <u>(extended) terminal set</u> and where $\text{int}(\cdot)$ denotes interior. We shall say that the combat terminates at time $\bar{t}$ where

$$\bar{t} := \inf\{t > t_o \,|\, [t,x(t)] \in \text{int}\, \bar{\mathcal{T}}\} \ . \tag{9}$$

If $\bar{t} = T^*$, we say that the combat ends in a <u>draw</u>. If $\bar{t} < T^*$, we say that player u (respectively, player v) <u>wins</u> the combat if there exists an $\varepsilon > 0$ such that $[t,x(t)] \in \text{int}\, \bar{\mathcal{T}}_u$ (respectively, $[t,x(t)] \in \text{int}\, \bar{\mathcal{T}}_v$) for all $t > \bar{t}$ satisfying $t - \bar{t} \leq \varepsilon$. If both players win the combat we speak of <u>joint</u>, or <u>simultaneous</u>, <u>capture</u>. Thus, the combat can terminate in one of the following four ways: (1) player u wins; (2) player v wins; (3) a draw; and (4) joint capture.

To obtain a consistent formulation of the combat problem, it is necessary first to resolve its decidability question. That is, each initial event (t_o, x_o) must be uniquely and unambiguously classifiable into one of the four termination categories (1)-(4) above, thus partitioning the event space $\mathcal{R} \times \mathcal{R}^n$ into mutually exclusive regions Φ_u, Φ_v, $\Phi_{u \vee v}$, and $\Phi_{u \wedge v}$, respectively.

To this end we define the players' termination preferences as follows. Player u ranks his preferences in order of priority as 1, 3, 4, 2, and player v ranks his preferences as 2, 3, 4, and 1.

<u>Remark 1</u>- This ranking is consistent with the intuitive notion that each player wishes to capture his opponent while not being captured himself. It also resolves the ambiguity that might occur in deciding between outcomes (3) and (4) when (1) and (2) cannot be forced by either of the players. This last point becomes clear if we observe that outcomes (3) and (4) can occur in one of two essential ways: the players may be "locked into joint capture" in the sense that a unilateral attempt by one of the players to postpone termination will enable his opponent to win; on the other hand, if a player cannot force a win but has control over the time at which joint capture will occur, he will select the latest such time and, if possible, set it at T^* (i.e., a draw). □

It is readily noted that by definition, the regions ϕ_u, ϕ_v. $\phi_{u \vee v}$, and $\phi_{u \wedge v}$ are <u>invariant</u> in the sense that there exist strategies for the players that maintain the resultant trajectory in its initial region until combat termination. Moreover, any sensible or, as we shall say, <u>consistent</u> strategies by the players will satisfy this invariance. Indeed, a trajectory will leave its initial region only if at least one of the players makes a fatal strategy error, in which case we say that the game strategies are inconsistent.

<u>Remark 2</u>- It is important to emphasize that in properly formulated and correctly played combat, the winning capabilities of the players depend only on the problem data (including the initial state). No reversals of the winning capability (or "role") occur unless a fundamental error has been made by a player who relinquishes an advantage to his opponent. □

We now associate with the combat problem a pair of differential games, one from the point of view of player u, or the <u>u-game</u>, and one from the point of view of player v, or the <u>v-game</u>.

The <u>u-game</u> G_u is defined as follows. Given is a cost functional

$$J_u = g_u[x(\bar{t}_u),\bar{t}_u] + \int_{t_o}^{\bar{t}_u} h_u[t,x(t),u(t),v(t)]dt \ , \tag{10}$$

with player u defined as the minimizer and player v as the maximizer. The terminal time is specified by

$$\bar{t}_u = \inf\{t > t_o \,|\, [t,x(t)] \in \text{int } \bar{\mathscr{T}}_u\} \ , \tag{11}$$

subject to the event constraint

$$[t,x(t)] \notin \text{int } \bar{\mathscr{T}}_v \quad \forall \quad t_o \le t \le \bar{t}_u \ . \tag{12}$$

The <u>v-game</u> G_v is specified as follows. Given is a cost functional

$$J_v = g_v[x(\bar{t}_v),\bar{t}_v] + \int_{t_o}^{\bar{t}_v} h_v[t,x(t),u(t),v(t)]dt \ , \tag{13}$$

with player v the minimizer and player u the maximizer. The terminal time $\bar{t}_v$ is given by

$$\bar{t}_v = \inf\{t > t_o \,|\, [t,x(t)] \in \text{int } \bar{\mathscr{T}}_v\} \ , \tag{14}$$

subject to the event constraint

$$[t,x(t)] \notin \text{int } \bar{\mathscr{T}}_u \quad \forall \quad t_o \le t \le \bar{t}_v \ . \tag{15}$$

We examine now the role of the two differential games in the formulation of the combat problem. First, note that if $(t_o,x_o) \in \Phi_u \cup \Phi_v$ exactly one of the games has feasible solutions (satisfying the terminal condition and event constraint) so that only the game of the winning player (the one with feasible solutions) can be played.

The winning player will then choose his strategy to minimize his own cost functional (subject to the terminal and event constraints of the game); his opponent, realizing that he has no alternatives (having no feasible solutions to his own game), will play to maximize his opponent's cost. Thus, there results a zero-sum game with the winning player the minimizer and his opponent the maximizer.

In case $(t_o,x_o) \in \phi_{u \vee v} \cup \phi_{u \wedge v}$, both games have feasible strategies, and the terminal times $\bar{t}_u$ and $\bar{t}_v$ coincide (to the least time in which each player can force capture of his opponent or a draw; see also remark 1). In this case each player will choose to minimize his own cost functional (while ignoring his opponent's). The resultant game is a nonzero-sum game with event and terminal constraints.

In summary, each player will choose his strategy to minimize the cost functional of his own game unless for the given initial conditions his game has no feasible solution (that is, he is forced to lose the combat) in which case he will choose his strategy to maximize the cost of his opponent.

Definition 1- A combat problem formulated with the aid of dual differential games and with strategy selections as described in table 1 is called a combat game. □

TABLE 1.- STRATEGY SELECTION RULES IN COMBAT GAME

Region	ϕ_u	ϕ_v	$\phi_{u \vee v} \cup \phi_{u \wedge v}$
Strategy of u	min J_u	max J_v	min J_u
Strategy of v	max J_u	min J_v	min J_v

Remark 3- Within the dual differential games framework proposed in the present paper, rules for strategy selections other than the one described above may be chosen. For example, we might have decided to select the players' strategies to maximize the opponents' costs instead of minimizing their own when $(t_o,x_o) \in \phi_{u \vee v} \cup \phi_{u \wedge v}$. Although this is logically consistent, we prefer the setup as proposed above since we find it more in line with expected intuitive response. From a purely mathematical standpoint it makes no essential difference what strategy selection rule is chosen so long as it is consistent and decidable. □

In games of combat in general, the terminal time is strongly influenced by the competing nature of the two differential games G_u and G_v. When $(t_o,x_o) \in \phi_{u \wedge v}$, the terminal time is forced to be the least time in which the players can, respectively, secure termination of their game, and the times for the two games coincide. Consequently, a case of special interest and simplicity in terms of strategy selection, and one that is also of practical importance, is when $g_u = g_v = 0$ and $h_u = h_v = 1$, that is, the cost functionals of both games are the durations of the games. Thus, in the time-optimal case, for $(t_o,x_o) \in \phi_{u \vee v} \cup \phi_{u \wedge v}$ essentially every feasible strategy is optimal.

4. δ-COMBAT GAMES

With certain types of cost functionals, the combat game as formulated in section 3 may not have optimal strategies because of lack of closure of the space of admissible trajectories. Specifically, since the target sets $\bar{\mathscr{T}}_u$ and $\bar{\mathscr{T}}_v$ are closed, so is their (nonempty) intersection $\bar{\mathscr{T}}_u \cap \bar{\mathscr{T}}_v$. Hence, the set $\bar{\mathscr{T}}_u^* := \bar{\mathscr{T}}_u/(\bar{\mathscr{T}}_u \cap \bar{\mathscr{T}}_v)$, the complement of $\bar{\mathscr{T}}_u \cap \bar{\mathscr{T}}_v$ in $\bar{\mathscr{T}}_u$, and the set $\bar{\mathscr{T}}_v^*$ (similarly defined), are not closed. As a result, a convergent sequence of winning trajectories for one of the players, say for player u, that terminate in $\bar{\mathscr{T}}_u^*$, need not converge to a trajectory that terminates at a point in $\bar{\mathscr{T}}_u^*$ but, rather, in $\bar{\mathscr{T}}_u \cap \bar{\mathscr{T}}_v$. But, then, the limiting trajectory ends in joint capture and is not winning for u.

We now turn to reformulate the combat game to avoid the technical difficulties referred to above. To this end we introduce the concept of a <u>δ-safety margin</u> and a <u>δ-combat problem</u>.

Let δ be a positive number and let $\bar{\mathscr{T}}_{u\wedge v}(\delta) := S_\delta(\bar{\mathscr{T}}_u \cap \bar{\mathscr{T}}_v)$ denote the relative open δ-neighborhood of $\bar{\mathscr{T}}_u \cap \bar{\mathscr{T}}_v$, that is, the set of all points $\phi := (t,x) \in \bar{\mathscr{T}}$ whose (Euclidean) distance $d(\phi, \bar{\mathscr{T}}_u \cap \bar{\mathscr{T}}_v)$ from $\bar{\mathscr{T}}_u \cap \bar{\mathscr{T}}_v$ is less than δ. Let $\bar{\mathscr{T}}_u(\delta) := \bar{\mathscr{T}}_u/\bar{\mathscr{T}}_{u\wedge v}(\delta)$ denote the points of $\bar{\mathscr{T}}_u$ that are not in $\bar{\mathscr{T}}_{u\wedge v}(\delta)$. Similarly define $\bar{\mathscr{T}}_v(\delta)$.

The δ-combat initiates at time $t = t_o$ and, just as before, continues as long as

$$[\bar{t}, x(\bar{t})] \notin \text{int}\, \bar{\mathscr{T}} ,$$

with termination time $\bar{t}$ defined by equation (9). The winning conditions of the δ-combat differ, however, from those of the "ordinary" combat as follows.

We still say that the δ-combat ends in a draw if $\bar{t} = T^*$. However, if $\bar{t} < T^*$ we designate the following outcomes. We say that u <u>wins</u> if

$$[\bar{t}, x(\bar{t})] \in \bar{\mathscr{T}}_u(\delta) , \tag{16}$$

that v <u>wins</u> if

$$[\bar{t}, x(\bar{t})] \in \bar{\mathscr{T}}_v(\delta) , \tag{17}$$

and that the combat ends in <u>joint δ-capture</u> if

$$[\bar{t}, x(\bar{t})] \in \bar{\mathscr{T}}_{u\wedge v}(\delta) . \tag{18}$$

The δ-combat, just as ordinary combat, can end (1) by u winning, (2) by v winning, (3) in a draw, or (4) in joint δ-capture. The players' termination preferences are unchanged as before, and again the event space can be partitioned into regions according to the outcome of the δ-combat as $\phi_u(\delta)$, $\phi_v(\delta)$, $\phi_{u\vee v}(\delta)$, and $\phi_{u\wedge v}(\delta)$, respectively.

The fundamental difference between the ordinary combat problem and the δ-combat problem is that in the latter case the winning terminal sets $\bar{\mathscr{T}}_u(\delta)$ and $\bar{\mathscr{T}}_v(\delta)$ are closed and that $\bar{\mathscr{T}}_u(\delta) \cap \bar{\mathscr{T}}_v(\delta) = \phi$ so that u winning and v winning cannot occur simultaneously. Thus, in formulating the δ-combat game we have to proceed differently than before.

First, we associate with the δ-combat problem a pair of cost functionals: $J_u(\delta)$, the cost from the point of view of player u:

$$J_u(\delta) := g_u[x(\bar{t}),\bar{t}] + \int_{t_o}^{\bar{t}} h_u[t,x(t),u(t),v(t)]dt \ , \tag{19}$$

and $J_v(\delta)$, the cost from the point of view of v:

$$J_v(\delta) := g_v[x(\bar{t}),\bar{t}] + \int_{t_o}^{\bar{t}} h_v[t,x(t),u(t),v(t)]dt \ . \tag{20}$$

Each player will relate to one of the two cost functionals depending on the expected outcome of the game as follows. If $(t_o,x_o) \in \phi_u(\delta)$ so that player u can force the game to terminate with condition (16) holding, both players will relate to cost functional $J_u(\delta)$, with u minimizing and v maximizing. Thus, a zero-sum differential game results with cost functional $J_u(\delta)$ and terminal constraints (9) and (16) holding.

When $(t_o,x_o) \in \phi_v(\delta)$, player v can force terminal condition (17), and in the resultant zero-sum differential game player v minimizes and player u maximizes the cost $J_v(\delta)$ subject to conditions (9) and (17).

Finally, if $(t_o,x_o) \in \phi_{u\vee v}(\delta) \cup \phi_{u\wedge v}(\delta)$ a nonzero-sum game will be played with each player minimizing his own cost functional with the terminal conditions (9) and (18) holding.

Remark 4- An example of cost functionals for which the ordinary combat game formulation as described in section 3 is valid and for which a δ-game formulation is not necessary is the following pair:

$$J_u = (-)d[(\bar{t}_u,x(\bar{t}_u)),\bar{\mathscr{T}}_v]$$

$$J_v = (-)d[(\bar{t}_v,x(\bar{t}_v)),\bar{\mathscr{T}}_u] \ .$$

Here the cost is the negative of the (Euclidean) distance of the terminal event from the opponent's target. Since the winning player is the minimizer, he maximizes this distance, whence his optimal strategy will never lead to zero cost (unless, of course, joint capture is the only possible outcome). □

Remark 5- The terminal set $\bar{\mathscr{T}}_{u\wedge v}(\delta)$ is not closed so that the nonzero-sum game for $(t_o,x_o) \in \phi_{u\vee v}(\delta) \cup \phi_{u\wedge v}(\delta)$ may sometimes not have optimal strategies. However, since it is impossible to secure closure of all three terminal sets $\bar{\mathscr{T}}_u(\delta)$, $\bar{\mathscr{T}}_v(\delta)$, and $\bar{\mathscr{T}}_{u\wedge v}(\delta)$ sinultaneously, it appears preferable to obtain a complete resolution of the winning games. □

Remark 6- The parameter δ can be chosen arbitrarily small to obtain an arbitrarily close approximation of the ordinary combat situation but with optimal winning strategies existing. □

5. THE TURRET GAME

Formulation of the Game

To illustrate the theory developed above we consider a combat game that represents a simplified version of the air combat situation discussed qualitatively in section 2. Player u moves in a plane with arbitrary velocity relative to a fixed reference frame (X,Y) and can turn a ray weapon relative to a fixed direction at a bounded angular rate $\dot{\alpha}$ (see fig. 2). Player v moves such that he is always at a distance R from u, and he can traverse this circle at an angular speed relative to a fixed direction at a bounded rate $\dot{\beta}$. Player v also has a ray weapon that he can turn relative to the line of sight between the two players at a bounded rate $\dot{\phi}$.

For convenience, we represent the problem in a relative reference frame with origin at u's position and the y-axis along u's weapon (fig. 3). Letting $x_1 = \beta - \alpha$, $x_2 = \phi$, $u = \dot{\alpha}$, $v_1 = \dot{\beta}$, and $v_2 = -\dot{\phi}$ the kinematical equations of motion are

$$\dot{x}_1 = v_1 - u \ , \quad x_1(0) = x_1^\circ \ , \tag{21}$$

$$\dot{x}_2 = -v_2 \ , \quad x_2(0) = x_2^\circ \ , \tag{22}$$

with x_1 and x_2 being computed modulo 2π, and where we take $t_o = 0$ since the system is autonomous. In view of the circular symmetry of the problem, it is easily seen that the playing space of interest is

$$P = \{(x_1,x_2) | x_1 \in [0,\pi], x_2 \in [0,\pi]\} \ . \tag{23}$$

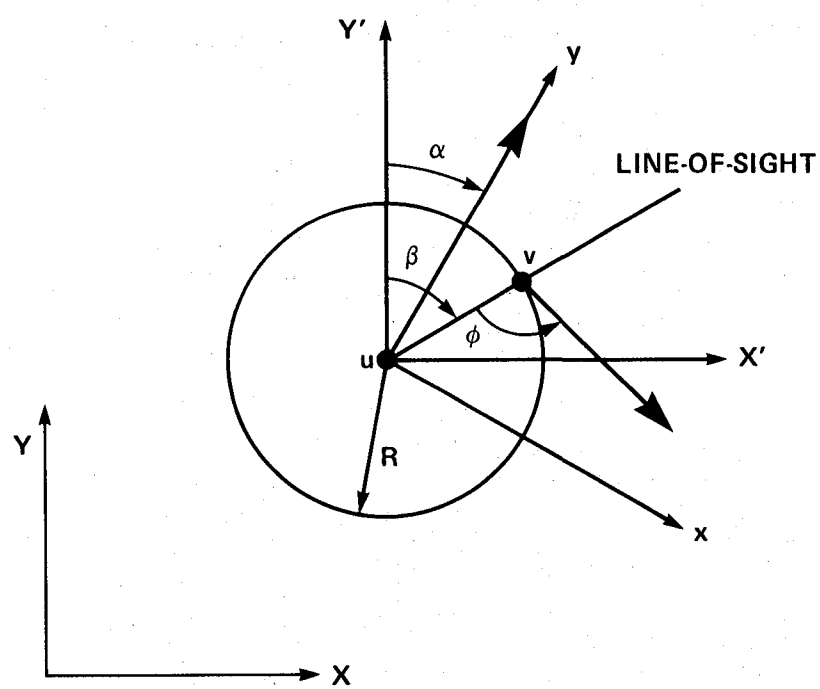

Figure 2.- Turret game in fixed reference frame.

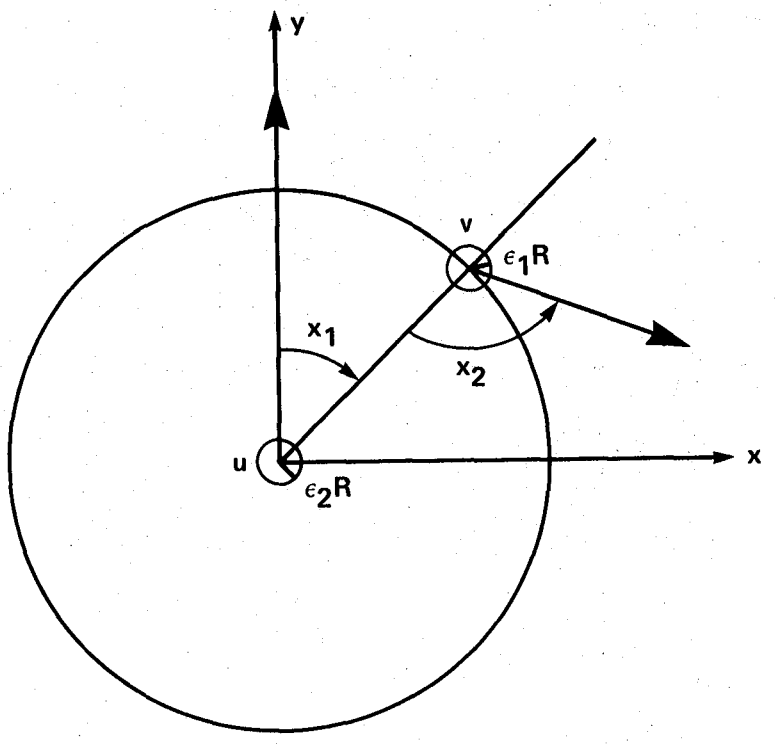

Figure 3.- Turret game in relative reference frame.

The controls are specified within the bounds

$$0 \leq u \leq \bar{u} \tag{24}$$

and

$$(v_1, v_2) \in V \subset \mathscr{R}^2_+ , \tag{25}$$

where $\mathscr{R}^2_+$ is the positive quadrant of $\mathscr{R}^2$.

Next, we choose T^*, the maximum allowed time duration of the combat. The extended targets are then given by

$$\bar{\mathscr{T}}_u = \{(t, x_1, x_2) \in \mathscr{R} \times P \,|\, x_1 \leq \varepsilon_1 \quad \text{if} \quad t < T^*\}$$

and

$$\bar{\mathscr{T}}_v = \{(t, x_1, x_2) \in \mathscr{R} \times P \,|\, x_2 \leq \varepsilon_2 \quad \text{if} \quad t < T^*\} ,$$

where $\varepsilon_1 R$ and $\varepsilon_2 R$ are the radii of the vulnerability regions or capture sets of the two players (fig. 3). The extended joint capture region $\bar{\mathscr{T}}_u \cap \bar{\mathscr{T}}_v$ is given by

$$\bar{\mathscr{T}}_u \cap \bar{\mathscr{T}}_v = \{(t, x_1, x_2) \in \mathscr{R} \times P \,|\, x_1 \leq \varepsilon_1, x_2 \leq \varepsilon_2 \quad \text{if} \quad t < T^*\} .$$

In the ensuing discussion we shall for the most part (except when dealing with draw regions and associated strategies) assume that T^* is sufficiently large so that we

can ignore the t dimension of the target. Thus we shall make reference to the (ordinary) target sets (see fig. 4)

$$\mathscr{T}_u = \{(x_1,x_2) \in P | x_1 \le \varepsilon_1\} ,$$

$$\mathscr{T}_v = \{(x_1,x_2) \in P | x_2 \le \varepsilon_2\} ,$$

$$\mathscr{T}_u \cap \mathscr{T}_v = \{(x_1,x_2) \in P | x_1 \le \varepsilon_1, x_2 \le \varepsilon_2\} .$$

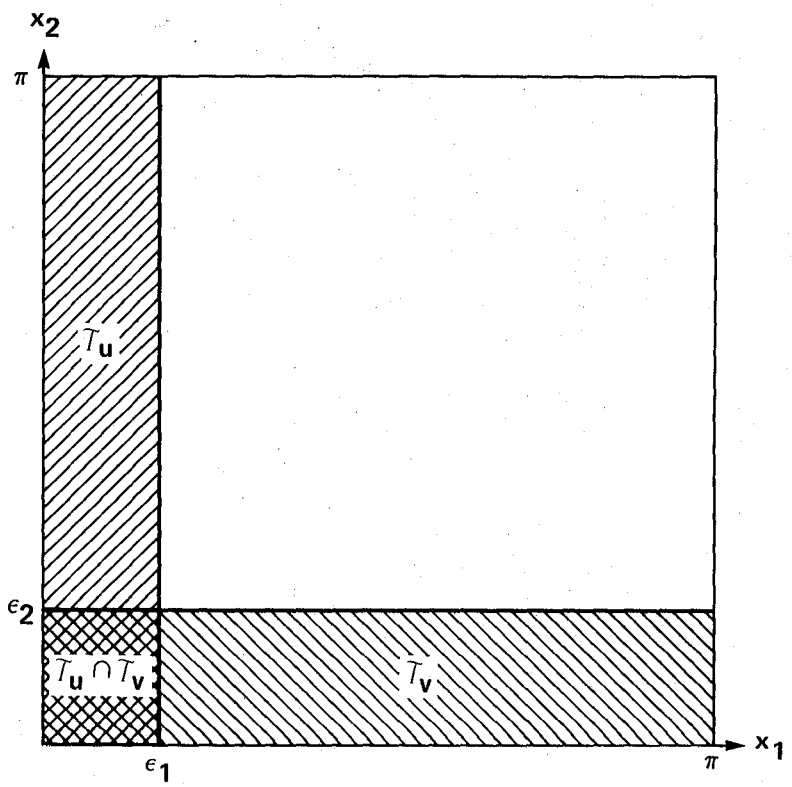

Figure 4.- Ordinary target sets.

Upon specifying the safety margin $\delta > 0$, we obtain the δ-capture sets as depicted in figure 5. The δ-combat terminates at time $\bar{t} < T^*$ if $\bar{t}$ is the first time the state intercepts the set $\mathscr{T}_u(\delta) \cup \mathscr{T}_v(\delta) \cup \mathscr{T}_{u \wedge v}(\delta)$ with an inward velocity. Alternatively, combat terminates at T^* in a draw. δ-capture of v by u occurs (if it occurs at all) if at termination with $\bar{t} < T^*$,

$$x_1(\bar{t}) = \varepsilon_1, x_2(\bar{t}) \ge \varepsilon_2 + \delta \quad \text{and} \quad \dot{x}_1(\bar{t}) < 0 . \tag{26}$$

Similarly, δ-capture of u by v occurs if at termination with $\bar{t} < T^*$,

$$x_1(\bar{t}) \ge \varepsilon_1 + \delta, x_2(\bar{t}) = \varepsilon_2 \quad \text{and} \quad \dot{x}_2(\bar{t}) < 0 . \tag{27}$$

Next we will analyze this game for different cost functionals and different cases of the control set V.

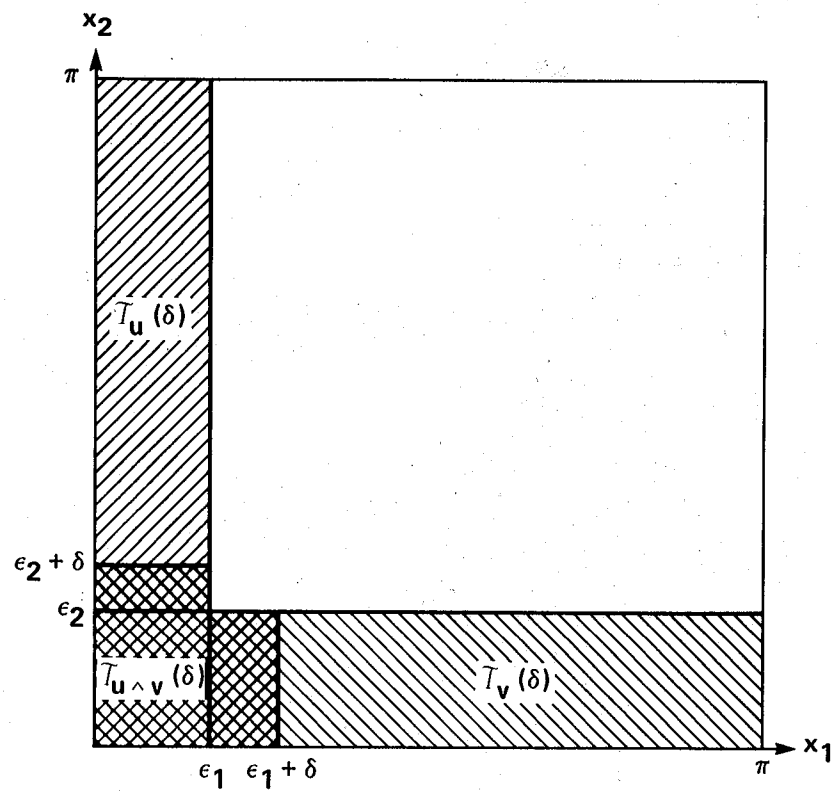

Figure 5.- δ-capture sets.

Linear Control Constraint

Let V (fig. 6) be given by

$$v_1 \geq 0 \ , \quad v_2 \geq 0 \ , \quad \frac{v_1}{\bar{v}_1} + \frac{v_2}{\bar{v}_2} \leq 1 \ , \tag{28}$$

where $\bar{v}_1$ and $\bar{v}_2$ are preselected positive bounds. (This case may be viewed as a convexification and approximation of the typical situation in which v's motion is limited by a lateral acceleration constraint specified by $v_1 v_2 \leq k_1$ and by bounds $v_1 \leq k_2$ and $v_2 \leq k_3$, dashed lines on figure 6.)

The cost functionals are chosen as

$$J_u(\delta) = -C_1 x_2^2 \Big|_{\bar{t}} + C_2 \int_0^{\bar{t}} dt \ , \tag{29}$$

and

$$J_v(\delta) = -C_1 x_1^2 \Big|_{\bar{t}} + C_2 \int_0^{\bar{t}} dt \ , \tag{30}$$

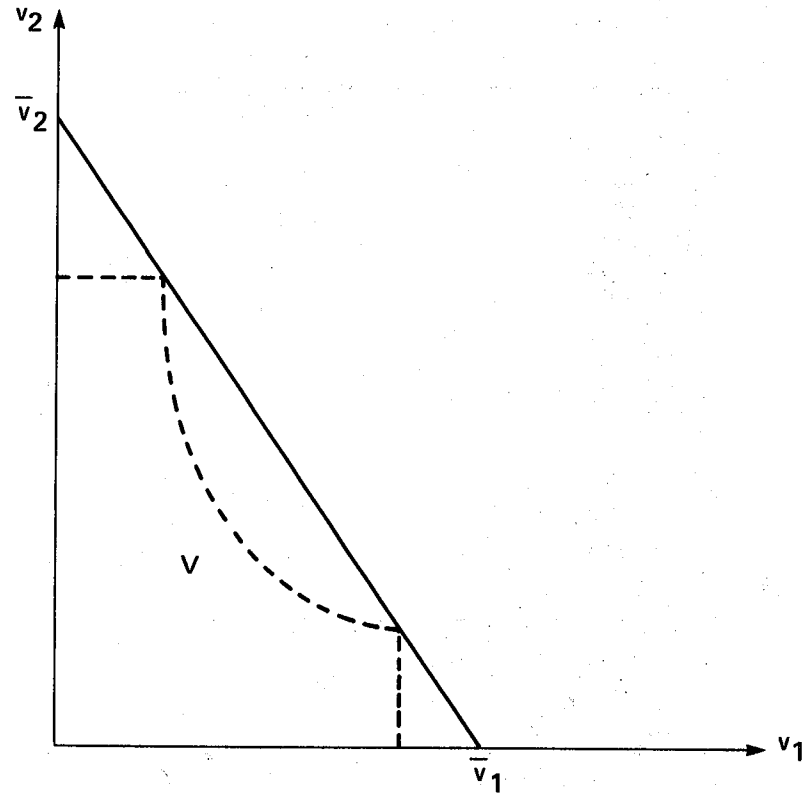

Figure 6.- Linear control constraint.

where C_1 and C_2 are positive constants. These cost functionals reflect the combined (weighted) objective of the winning player of minimizing the termination time while securing maximum safety, that is, maximum final distance from the opponent's target set, and conversely for the losing player.

Before beginning the detailed analysis of optimal strategies, we examine the implications of the termination conditions (26) and (27). First, note that v can always win from suitable initial conditions because, from equations (22) and (28), he can always satisfy the third condition of equation (27). On the other hand, for u to win he must be able to force the third condition of equation (26), $\dot{x}_1(\bar{t}) < 0$; this implies, using (21), (24), and (28), that

$$\bar{u} > \bar{v}_1 \tag{31}$$

must hold. Thus, the relative magnitudes of $\bar{u}$ and $\bar{v}_1$ are of key importance and we begin by studying the game with (31) holding.

First, consider u's winning δ-game. From table 1, in this game u wishes to minimize and v to maximize $J_u(\delta)$ in equation (28). In order to employ the standard necessary conditions, the Hamiltonian is defined by

$$H = \lambda_o C_2 + \lambda_1(v_1 - u) - \lambda_2 v_2 \ . \tag{32}$$

We may set $\lambda_o = 1$ (since $\lambda_o = 0$ adds no new candidates for optimal control) and λ_1 and λ_2 are constants (because H does not depend on x_1 or x_2). If u^*, v_1^*, and v_2^* are optimal controls, then

$$u^*, v_1^*, v_2^* = \arg\left(\min_{0 \le u \le \bar{u}} \max_{v_1, v_2 \in V} H \right) , \tag{33}$$

and

$$H(\lambda_1, \lambda_2, u^*, v_1^*, v_2^*) = 0 . \tag{34}$$

The termination condition is

$$x_1(\bar{t}) = \varepsilon_1 . \tag{35}$$

and the state constraint is

$$x_2(t) \ge \varepsilon_2 + \delta , \quad \forall\ t \in [0, \bar{t}] . \tag{36}$$

From equation (29), the transversality conditions give λ_2 as

$$\lambda_2 = \lambda_2(\bar{t}) = \partial J_u(\delta)/\partial x_2 = -2C_1 x_2(\bar{t}) < 0 . \tag{37}$$

Therefore, we may write equation (32) as

$$H = C_2 + \lambda_1(v_1 - u) + 2C_1 \bar{x}_2 v_2 , \tag{38}$$

where $\bar{x}_2 = x_2(\bar{t})$.

To determine the optimal controls from equations (33) and (34), the sign of λ_1 is needed. If $\lambda_1 < 0$, then from equations (33) and (38) $v_1^* = 0$, $v_2^* = \bar{v}_2$, and $u^* = 0$; therefore, H is the sum of two positive terms, violating condition (34). Similarly, $\lambda_1 = 0$ leads to violation of (34) and thus

$$\lambda_1 > 0 . \tag{39}$$

It follows that the optimal control for u is

$$u^* = \bar{u} \tag{40}$$

and the optimal controls for v are

$$v_1^*, v_2^* = \arg\left[\max_{v_1, v_2 \in V} (\lambda_1 v_1 + 2C_1 \bar{x}_2 v_2) \right] . \tag{41}$$

The optimal solution of this simple linear programming problem will always lie on the constraint

$$v_2 = -\frac{\bar{v}_2}{\bar{v}_1} v_1 + \bar{v}_2 , \quad 0 \le v_1 \le \bar{v}_1 \tag{42}$$

so that equation (41) becomes

$$v_1^* = \arg\left[\max_{0 \le v_1 \le \bar{v}_1} (\lambda_1 - 2C_1 \bar{x}_2 \bar{v}_2 / \bar{v}_1) v_1 \right] . \tag{43}$$

There are three possibilities:

$$\lambda_1 > 2C_1\bar{x}_2\bar{v}_2/\bar{v}_1 \Rightarrow v_1^* = \bar{v}_1 \ , \quad v_2^* = 0 \ , \tag{44a}$$

$$\lambda_1 < 2C_1\bar{x}_2\bar{v}_2/\bar{v}_1 \Rightarrow v_1^* = 0 \ , \quad v_2^* = \bar{v}_2 \ , \tag{44b}$$

$$\lambda_1 = 2C_1\bar{x}_2\bar{v}_2/\bar{v}_1 \Rightarrow v_1^*, v_2^* \text{ singular} \ . \tag{44c}$$

Next, consider v's winning δ-game with condition (31) holding. Now, u wishes to maximize and v to minimize equation (30) subject to

$$x_2(\bar{t}) = \varepsilon_2 \tag{45}$$

and

$$x_1(\bar{t}) \geq \varepsilon_1 + \delta \quad \forall\ t \in [0,\bar{t}] \ . \tag{46}$$

Proceeding as before, we conclude that $\lambda_1 = -2C_1\bar{x}_1$, $u^* = \bar{u}$, $\lambda_2 > 0$, and v's possible optimal controls are as given by (44); however, in this case only the choice (44b) satisfies (34).

We are now in a position to partition the game's playing space (eq. (23)) into the regions $\Phi_u(\delta)$ (u wins), $\Phi_v(\delta)$ (v wins), $\Phi_{u\wedge v}(\delta)$ (joint δ-capture), and $\Phi_{u\vee v}(\delta)$ (draw). Player u's winning δ-game will be feasible if and only if he is able to satisfy equations (35) and (36) for all of player v's admissible controls. At the boundary of $\Phi_u(\delta)$, v will just be able to make (36) an equality with controls (44b). With this choice of controls, (35) and (36) give

$$\bar{t} = \frac{x_1^\circ - \varepsilon_1}{\bar{u}} \leq \frac{x_2^\circ - \varepsilon_2 - \delta}{\bar{v}_2} \ ,$$

that is,

$$\frac{x_2^\circ - \varepsilon_2 - \delta}{x_1^\circ - \varepsilon_1} \geq \frac{\bar{v}_2}{\bar{u}} =: \gamma_2 \ , \tag{47}$$

which defines $\Phi_u(\delta)$.

Similarly, v's winning δ-game will be feasible if and only if (45) and (47) are satisfied. At the boundary of $\Phi_v(\delta)$, v can just achieve (45) with (46) an equality at $t = \bar{t}$ and his controls thus will be (44b) here. Integrating (21) and (22) with this control choice and using (46), the specification of the region $\Phi_v(\delta)$ is obtained as

$$\frac{x_2^\circ - \varepsilon_2}{x_1^\circ - \varepsilon_1 - \delta} \leq \gamma_2 \ . \tag{48}$$

Since under condition (31) there can never be a draw (u will always eventually win with $u^* = \bar{u}$ unless v does so first), the region of the playing space not satisfying either (47) or (48) is a joint δ-capture region, $\Phi_{u\wedge v}(\delta)$, where the optimal strategies are (40) and (44b). The curves defined by equalities in (47) and (48)

divide the playing space into regions of different outcomes and, therefore, following Isaacs (ref. 2), may be termed δ-barriers.

There remains the problem of determining v's optimal controls in region $\Phi_u(\delta)$. We accomplish this by direct computation of $J_u(\delta)$ in equation (29) for the three control possibilities (44) and comparison of the results. For (44a) and (44b), we have

$$J_u^{(a)}(\delta) = -C_1 x_2^{\circ 2} + C_2(x_1^\circ - \varepsilon_1)/(\bar{u} - \bar{v}_1) \tag{49}$$

and

$$J_u^{(b)}(\delta) = -C_1[x_2^\circ - \gamma_2(x_1^\circ - \varepsilon_1)]^2 + C_2(x_1^\circ - \varepsilon_1)/\bar{u} \ . \tag{50}$$

The optimal controls for v between the choices (44a) and (44b) will be (44a) when $J_u^{(a)}(\delta) > J_u^{(b)}(\delta)$, giving

$$\frac{C_2\gamma_1}{\bar{u} - \bar{v}_1} > C_1\gamma_2[2x_2^\circ - \gamma_2(x_1^\circ - \varepsilon_1)] \tag{51}$$

(where $\gamma_1 := \bar{v}_1/\bar{u}$), and they will be (44b) when this inequality is reversed.

Next consider the surface (line) separating these two regions, defined by $J_u^{(a)}(\delta) = J_u^{(b)}(\delta)$. Solving for x_2°,

$$x_2^\circ = \frac{\gamma_2}{2}(x_1^\circ - \varepsilon_1) + \frac{C_2\gamma_1}{2C_1\gamma_2\bar{u}(1 - \gamma_1)} \ . \tag{52}$$

The slope of this line is $\gamma_2/2$, or, from (47), one-half the slope of the boundary line of $\Phi_u(\delta)$. The intercept of (52) with u's target set is

$$\bar{x}_2 = x_2^\circ\Big|_{x_1^\circ=\varepsilon_1} = \frac{C_2\gamma_1}{2C_1\gamma_2\bar{u}(1 - \gamma_1)} \ . \tag{53}$$

Now consider the singular case (44c). Substituting (40), (42), and the condition (44c) into (38) and invoking (34) gives, upon solving for $\bar{x}_2$,

$$\bar{x}_2 = \frac{C_2\gamma_1}{2C_1\gamma_2\bar{u}(1 - \gamma_1)} \ .$$

This agrees with (53) and thus (52) is a singular surface (44c) with termination condition (53). The controls on this surface are found by setting $dx_2/dx_1 = \gamma_2/2$ and using (21) and (22) and invoking (42):

$$\frac{dx_2}{dx_1} = \frac{-v_2}{v_1 - \bar{u}} = \frac{(\bar{v}_2/\bar{v}_1)v_1 - \bar{v}_2}{v_1 - \bar{u}} = \frac{\gamma_2}{2} \ ,$$

which gives

$$\left.\begin{aligned} v_1^* &= \frac{\gamma_1 \bar{u}}{2 - \gamma_1} \\ v_2^* &= \bar{v}_2 \frac{1 - \gamma_1}{2 - \gamma_1} \end{aligned}\right\} . \tag{54}$$

It remains to test the optimality of these controls. A straightforward computation of the costs using controls (44a), (44b), and (54) shows that

$$J_u^{(a)}(\delta) = J_u^{(b)}(\delta) < J_u^{(c)}(\delta)$$

for any initial state on the locus (52); therefore, the controls (54) are optimal for v in this case.

We can now completely specify the optimal strategies (controls) for the two players for case (31). In the region $\Phi_u^{(1)}(\delta)$ (see fig. 7(a)), v plays (44b) until termination. In $\Phi_u^{(2)}(\delta)$, v plays (44b) until the surface (52) is reached and then plays (54). In $\Phi_u^{(3)}(\delta)$, v plays (44a) until (52) is reached and then plays (54), and, in $\Phi_u^{(4)}(\delta)$, v plays (44a) until termination. The region $\Phi_u(\delta)$ is given by $\Phi_u(\delta) = \bigcup_{i=1}^{4} \Phi_u^{(i)}(\delta)$. In the regions $\Phi_v^{(1)}(\delta)$ and $\Phi_{u \wedge v}(\delta)$, v plays (44b). Player u plays $\bar{u}$ in all regions. Note that in figure 7(a) the partition of the playing space is described for the case

$$\varepsilon_2 + \delta < \frac{C_2 \gamma_1}{2C_1 \gamma_2 \bar{u}(1 - \gamma_1)} < \pi .$$

This figure also shows example optimal trajectories in each region.

Next, we consider the case

$$\bar{u} = \bar{v}_1 . \tag{55}$$

In this case, v can always prevent the third condition of (26) from being satisfied and thus u can never win (from initial states outside the target's interior). Therefore, only v's winning game need be considered. Reasoning exactly as before, the region $\Phi_v^{(1)}(\delta)$ is defined by (48) and the optimal controls in this region are (40) and (44b).

In the region of the playing space defined by (47), a simple calculation using (21), (22), (42), and (55) shows that selection of controls (44a) results in a draw, whereas selection by v of any other controls subject to (42) gives a trajectory with slope γ_2, resulting in capture of v by u; therefore, v's optimal controls are (44a) in this region, denoted $\Phi_{uVv}^{(1)}(\delta)$. In the region not satisfying either (47) or (48), the controls (44a) again give a draw, whereas any other controls for v result in joint δ-capture. According to the hierarchy adopted in section 3, v prefers a draw to joint δ-capture and therefore v's optimal controls in this region, denoted $\Phi_{uVv}^{(2)}(\delta)$, are also (44a). The region $\Phi_{uVv}(\delta) = \Phi_{uVv}^{(1)}(\delta) \cup \Phi_{uVv}^{(2)}(\delta)$

$$① \quad x_2^0 = \gamma_2 (x_1^0 - \epsilon_1) + \frac{c_2 \gamma_1}{2c_1 \gamma_2 \bar{u} (1 - \gamma_1)}$$

$$② \quad x_2^0 = \gamma_2 (x_1^0 - \epsilon_1 - \delta) + \epsilon_2$$

$$③ \quad x_2^0 = \gamma_2 (x_1^0 - \epsilon_1) + \epsilon_2 + \delta$$

$$④ \quad x_2^0 = \frac{\gamma_2}{2} (x_1^0 - \epsilon_1) + \frac{c_2 \gamma_1}{2c_1 \gamma_2 \bar{u} (1 - \gamma_1)}$$

$$⑤ \quad x_2^0 = \frac{c_2 \gamma_1}{2c_1 \gamma_2 \bar{u} (1 - \gamma_1)}$$

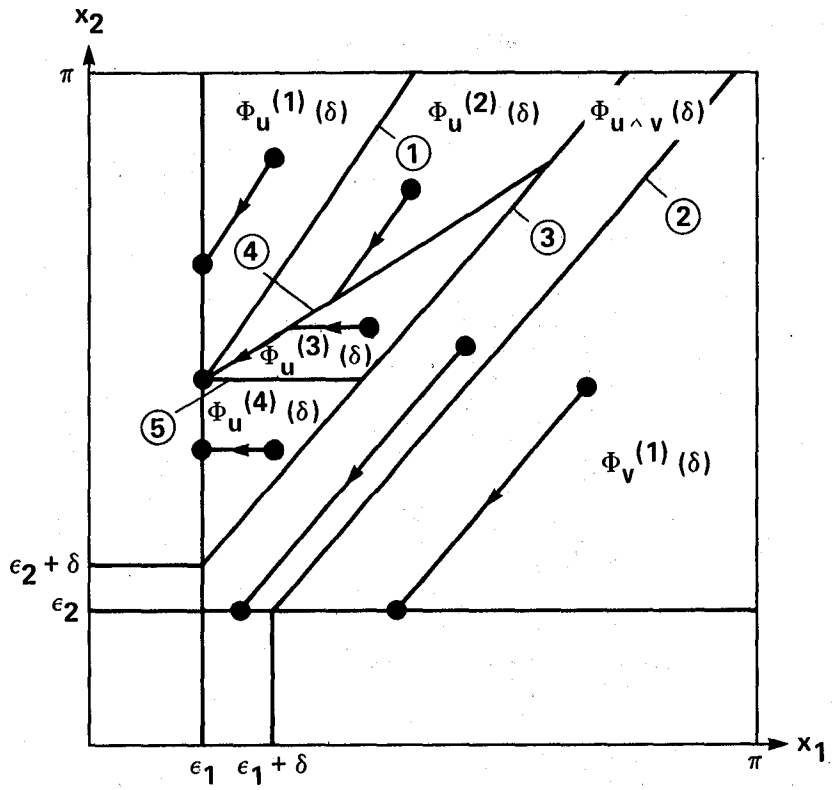

(a) $\gamma_1 < 1$.

Figure 7.- Regions and optimal trajectories in the playing space: turret game with linear control constraint and quadratic cost.

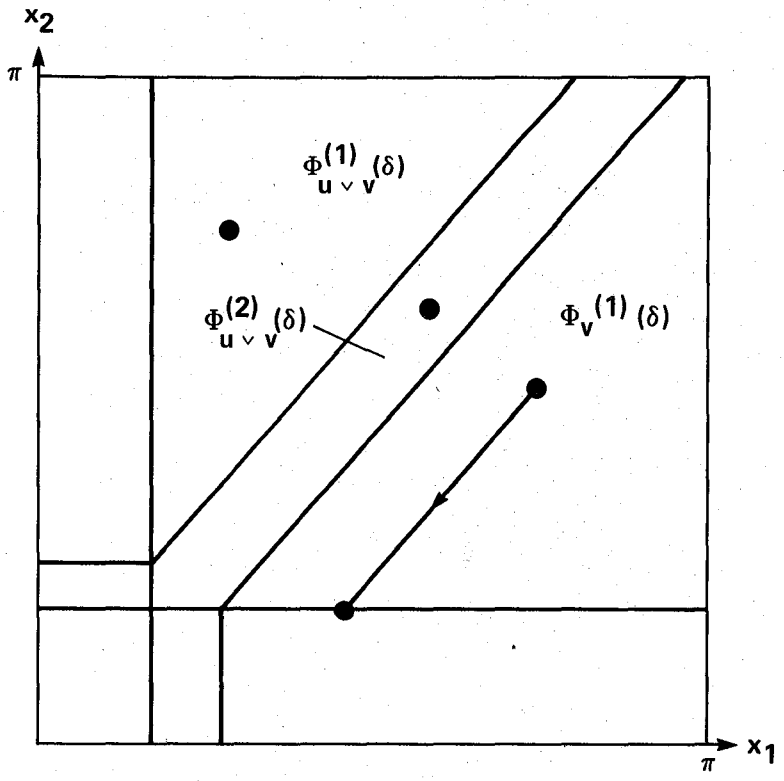

(b) $\gamma_1 = 1$.

⑥ $x_2^0 = (x_1^0 + \pi)\gamma_2 - \dfrac{c_2\gamma_2}{c_1\bar{u}(\gamma_1 - 1)} + \epsilon_2$

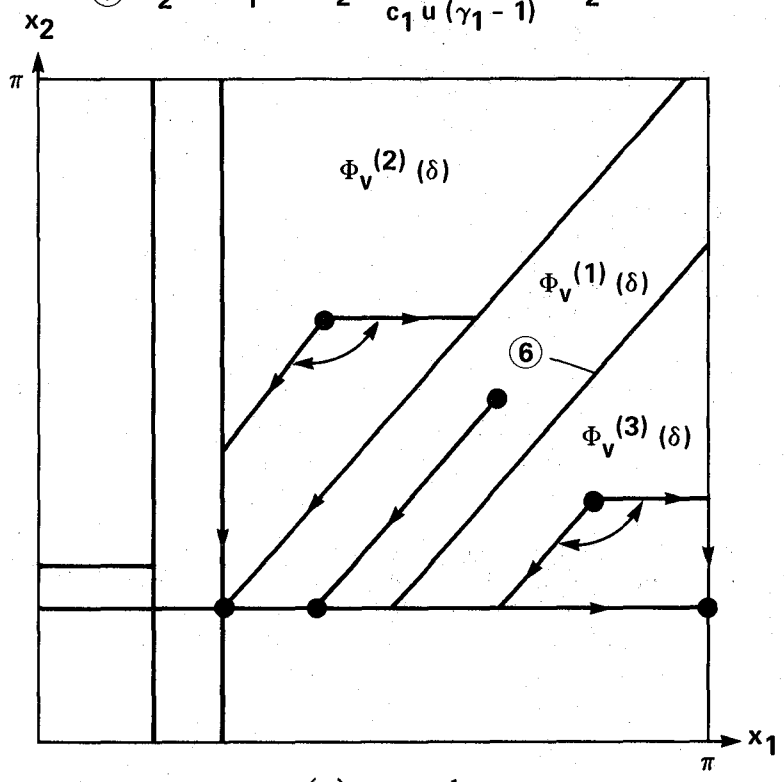

(c) $\gamma_1 > 1$.

Figure 7.- Concluded.

is then given by the converse of (48), and all trajectories in this region are stationary with $t = T^*$. The regions $\phi_v^{(1)}(\delta)$ and $\Phi_{uVv}(\delta)$ for (55) holding are shown in figure 7(b), along with example optimal trajectories.

The last case to consider is

$$\bar{u} < \bar{v}_1 \ . \tag{56}$$

From (21), (22), (26), and (27), it is obvious that now v can capture u from any position in the playing space P that is not in the interior of u's target, and therefore $\Phi_v(\delta) = P/\text{int}\ \mathscr{T}_u(\delta)$. The necessary conditions again give (40) as u's optimal control and show that v's optimal controls will lie on (42). In this case, however, the necessary conditions do not establish the sign of λ_2; further, the optimal controls of v are frequently nonunique, and the optimal trajectories are frequently on the boundaries of the playing space. This means that the necessary conditions are of little use in determining v's optimal controls and we use direct comparison of cost functionals instead.

The minimum time-to-capture from an arbitrary point (x_1°, x_2°) in the region (48) is obtained from using controls (44b) in (21) and (22); the result is

$$t' = (x_2^\circ - \varepsilon_2)/\bar{v}_2 \ .$$

At this time,

$$x_1' = -(x_2^\circ - \varepsilon_2)/\gamma_2 + x_1^\circ$$

and thus from (30),

$$J_v'(\delta) = -C_1[x_1^\circ - (x_2^\circ - \varepsilon_2)/\gamma_2]^2 + C_2(x_2^\circ - \varepsilon_2)/\bar{v}_2 \ .$$

At t', v has the option of forcing penetration immediately or of playing controls (44a) and forcing penetration of his target at some later point x_1'' at an additional time increment t''. Again from (21),

$$x_1'' = (\bar{v}_1 - \bar{u})t'' + x_1'$$

and the cost is

$$J_v''(\delta) = -C_1 x_1''^2 + C_2\left[\frac{x_2^\circ - \varepsilon_2}{\bar{v}_2} + \frac{x_1'' + (x_2^\circ - \varepsilon_2)/\gamma_2 - x_1^\circ}{\bar{v}_1 - \bar{u}}\right] . \tag{57}$$

But this function will have a minimum with respect to $x_1'' \in [x_1', \pi]$ at either $x_1'' = x_1'$ or $x_1'' = \pi$. Thus, we need to compare the cost (57) for $x_1'' = x'$ with that for $x_1'' = \pi$. The result is that the minimum-time path will be optimal if

$$x_1^\circ + \pi - \frac{x_2^\circ - \varepsilon_2}{\gamma_2} < \frac{C_2}{C_1\bar{u}(\gamma_1 - 1)} \tag{58}$$

and the path ending at (π, ε_2) will be optimal when inequality (58) is reversed. Note that because of the linearity of (21), (22), and (42) all paths using any sequence of controls satisfying (42) and reaching (π, ε_2) without violating the constraints

will take the same time, and thus the optimal controls and paths are not unique in this case.

The line separating the two regions (obtained by replacing the inequality by equality in (58)) has slope γ_2 and is thus parallel to the minimum time paths. This surface intercepts v's target at $C_2/[C_1\bar{u}(\gamma_1 - 1)] - \pi$.

The regions and example trajectories are shown in figure 7(c) for the case (56) and the condition $\varepsilon_1 + \delta < C_2/[C_1\bar{u}(\gamma_1 - 1)] - \pi < \pi$. The optimal paths in region $\Phi_v^{(2)}(\delta)$ are nonunique (only the two extreme paths are shown) and all end at $(\varepsilon_1 + \delta, \varepsilon_2)$ in minimum time; the paths in $\Phi_v^{(2)}(\delta)$ are unique and minimum time; and the paths in $\Phi_v^{(3)}(\delta)$ are nonunique and all end at (π, ε_2). If $C_2/[C_1\bar{u}(\gamma_1 - 1)] - \pi < \varepsilon_1 + \delta$, all optimal trajectories end at (π, ε_2) and if $C_2/[C_1\bar{u}(\gamma_1 - 1)] > 2\pi$ all trajectories are minimum time.

A special case of these results is time-optimality ($C_1 = 0$ and $C_2 = 1$). In this case, the regions in which the optimal trajectories are not time-optimal vanish (specifically, $\Phi_u^{(1)}(\delta)$, $\Phi_u^{(2)}(\delta)$, $\Phi_u^{(3)}(\delta)$, and $\Phi_v^{(3)}(\delta)$ in fig. 7). Also, in region (48) u's control is not defined since it has no effect on the outcome of the game. These results are summarized in figure 8; the optimal strategies in each region are obvious.

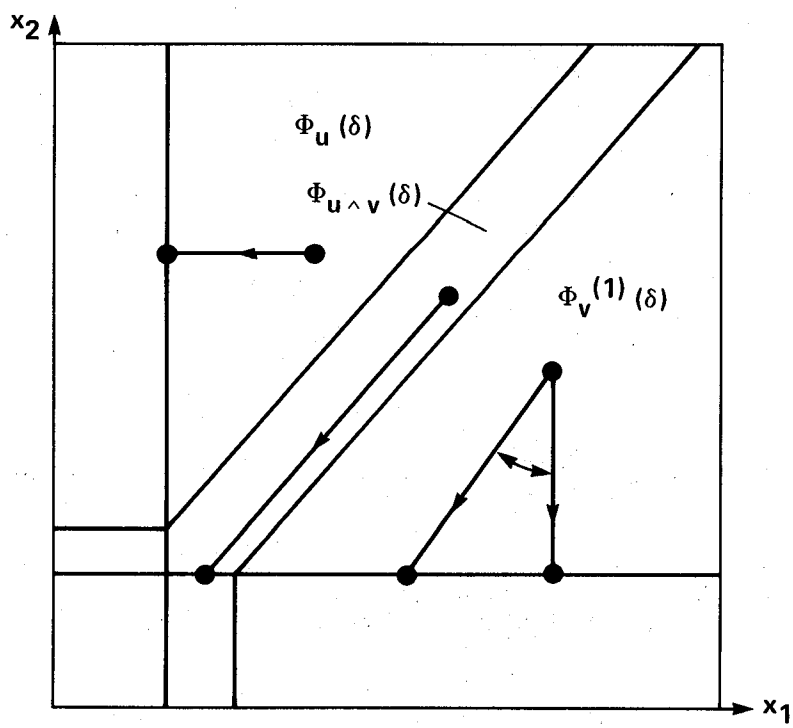

(a) $\gamma_1 < 1$.

Figure 8.- Regions and optimal trajectories in the playing space: turret game with linear control constraint and time optimality.

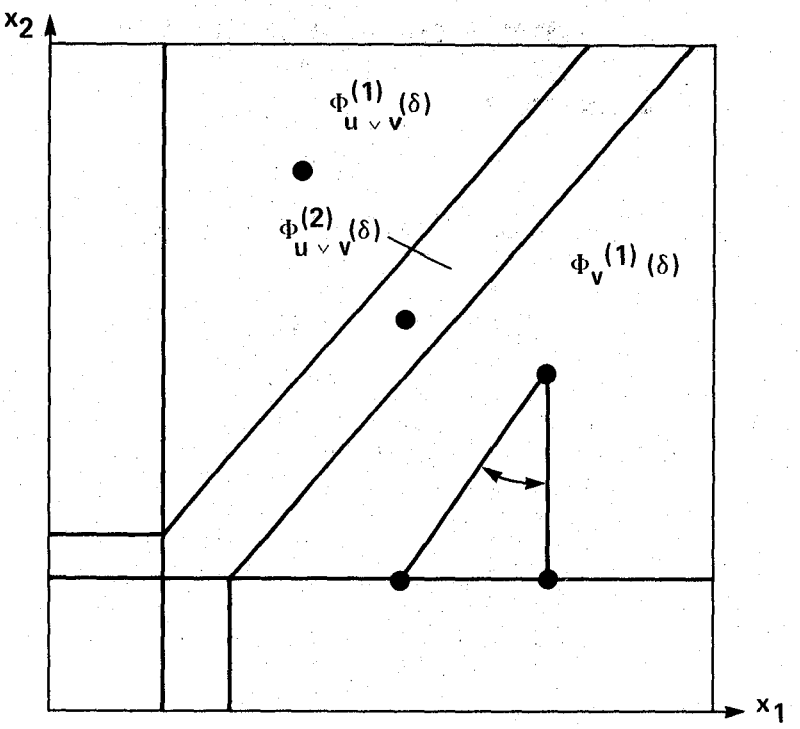

(b) $\gamma_1 = 1$.

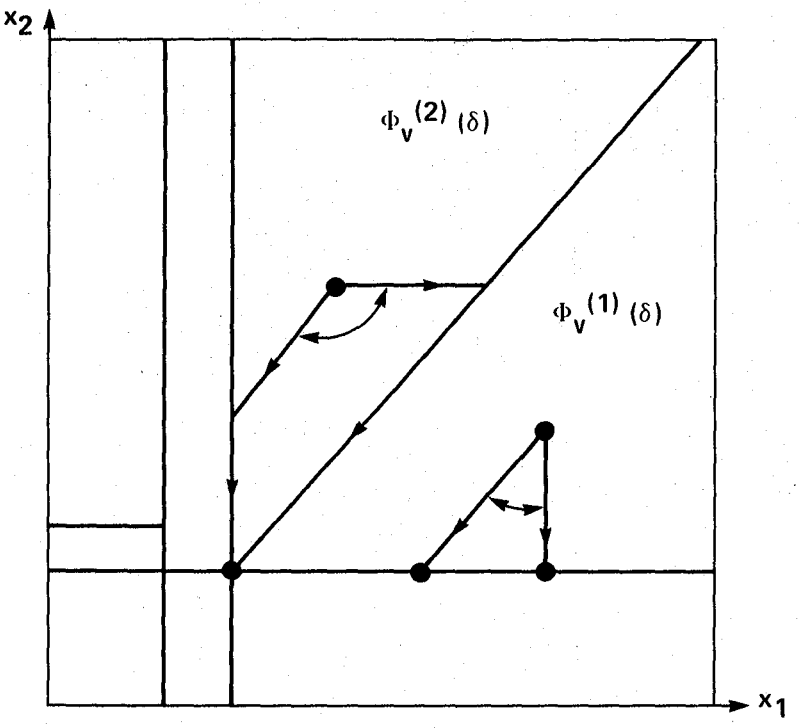

(c) $\gamma_1 > 1$.

Figure 8.- Concluded.

Circular Control Constraint

Now let V (fig. 9) be given by

$$v_1 \geq 0,\ v_2 \geq 0,\ v_1^2 + v_2^2 \leq \bar{v}^2 \ , \tag{59}$$

where $\bar{v}$ is a preselected positive bound, and choose both costs as time-to-capture

$$J_u(\delta) = J_v(\delta) = \int_0^{\bar{t}} dt \ . \tag{60}$$

As before, inspection of (22) and (27) shows that v can always force termination (i.e., $\dot{x}_2(\bar{t}) < 0$) and is therefore always capable of winning, whereas from (21), (26), and (59) u can win only if

$$\bar{u} > \bar{v} \ . \tag{61}$$

We begin by investigating the game with this condition holding and first consider u's winning game, that is, u minimizes and v maximizes (60) subject to (21), (22), (24), (35), (36), and (59). The Hamiltonian is

$$H = 1 + \lambda_1(v_1 - u) - \lambda_2 v_2 + \mu(\bar{v}^2 - v_1^2 - v_2^2) \ , \tag{62}$$

where the (ordinary) multiplier μ satisfies

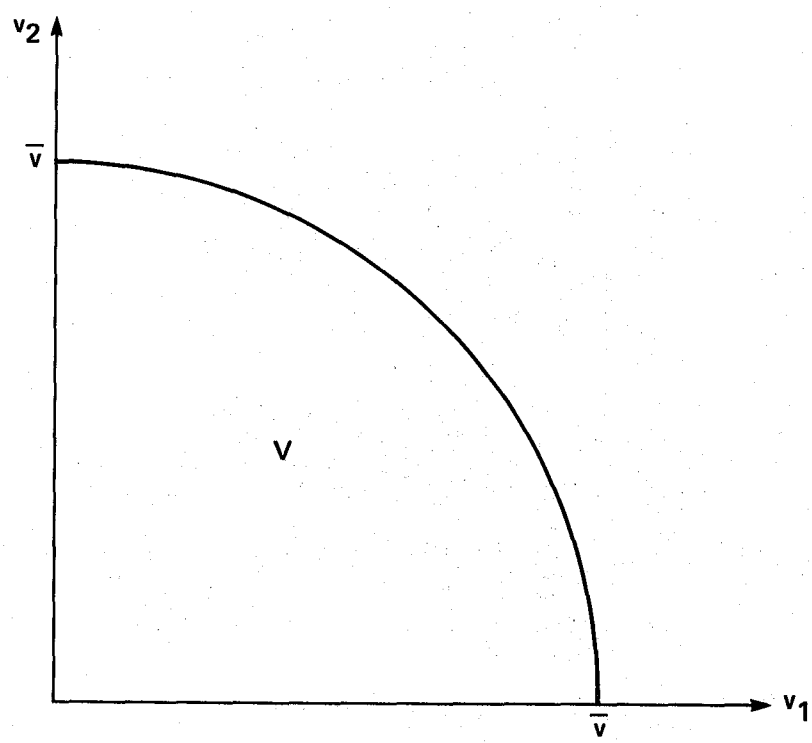

Figure 9.- Circular control constraint.

$$\left.\begin{aligned} \mu &= 0 \quad \text{if} \quad v_1^2 + v_2^2 < \bar{v}^2 \\ \mu &\geq 0 \quad \text{if} \quad v_1^2 + v_2^2 = \bar{v}^2 \end{aligned}\right\} \tag{63}$$

and λ_1 and λ_2 are constants. The optimal controls for v must satisfy

$$\left.\begin{aligned} \frac{\partial H}{\partial v_1} &= \lambda_1 - 2\mu v_1 = 0 \\ \frac{\partial H}{\partial v_2} &= -\lambda_2 - 2\mu v_2 = 0 \end{aligned}\right\} . \tag{64}$$

Since $\mu = 0$ violates the condition $H = 0$, required for optimal controls, (63) implies that v's optimal controls satisfy

$$v_1^2 + v_2^2 = \bar{v}^2 . \tag{65}$$

Further, $H = 0$ and conditions (64) imply that

$$\lambda_1 > 0 \quad \text{and} \quad \lambda_2 \leq 0 , \tag{66}$$

so that

$$u^* = \bar{u} . \tag{67}$$

If (36) is satisfied with strict inequality at $t = \bar{t}$, the transversality conditions give $\lambda_2 = 0$, and from (64) and (65), for this case,

$$v_1^* = \bar{v}, \; v_2^* = 0 . \tag{68}$$

To determine the boundary of u's winning region, note that v desires to choose controls (subject to (65)) to make this region as small as possible. Assuming constant controls and using (65), (21) and (22) may be integrated to give

$$\varepsilon_1 = x_1^\circ + (v_1 - \bar{u})\bar{t} \tag{69}$$

and

$$\bar{x}_2 = x_2^\circ - (\bar{v}^2 - v_1^2)^{1/2}\bar{t} . \tag{70}$$

Evaluating (36) at $t = \bar{t}$ and using (69) and (70) gives

$$x_2^\circ - \varepsilon_2 - \delta \geq (\bar{v}^2 - v_1^2)^{1/2} \frac{x_1^\circ - \varepsilon_1}{\bar{u} - v_1} . \tag{71}$$

Therefore, u's winning region will be smallest when $v_1 = \gamma^2\bar{u}$, where $\gamma = \bar{v}/\bar{u}$; putting this value in (71) gives the specification of region $\Phi_u(\delta)$ as

$$x_2^\circ - \varepsilon_2 - \delta \geq (x_1^\circ - \varepsilon_1)/(1/\gamma^2 - 1)^{1/2} . \tag{72}$$

The optimal strategies in this region are (67) and (68).

Next, consider v's winning δ-game for (61) holding; now u maximizes and v minimizes (60) subject to (65) and (66). The Hamiltonian is (62) as before, but now

$\mu \le 0$ in (63). Proceeding as before, if (46) is satisfied with strict inequality $\lambda_1 = 0$, then v's optimal controls are

$$v_1^* = 0, \; v_2^* = \bar{v} \tag{73}$$

and u's control is indeterminate. For (46) satisfied with equality at $t = \bar{t}$, u's optimal control is given by (67) and v's optimal controls are constants satisfying (65). Integrating (21) and (22) with these controls gives

$$\left.\begin{aligned} \bar{t} &= (x_2^\circ - \varepsilon_2)/(\bar{v}^2 - v_1^2)^{1/2} \\ \varepsilon_1 + \delta &= (v_1 - \bar{u})(x_2^\circ - \varepsilon_2)/(\bar{v}^2 - v_1^2)^{1/2} + x_1^\circ \end{aligned}\right\} . \tag{74}$$

Solving the latter equation for v_1,

$$v_1 = \bar{u}\,\frac{1 - \eta[\gamma^2(1 + \eta^2) - 1]^{1/2}}{1 + \eta^2} \tag{75}$$

where

$$\eta = \frac{x_1^\circ - \varepsilon_1 - \delta}{x_2^\circ - \varepsilon_2} . \tag{76}$$

The region in which this control will be used is the region in which (75) will have real solutions satisfying (65), that is,

$$(1/\gamma^2 - 1)^{1/2} \le \eta \le 1/\gamma . \tag{77}$$

Note that the controls corresponding to the lower and upper bounds in (77) are $v_1 = \gamma^2\bar{u}$ and $v_1 = 0$, respectively.

We have now determined the regions and optimal controls for the case (61). In $\Phi_u(\delta)$, defined by (72), the optimal controls are (67) and (68). In $\Phi_v^{(1)}(\delta)$, defined by

$$\eta \ge 1/\gamma , \tag{78}$$

the controls are (73) with u indeterminate. In $\phi_v^{(2)}(\delta)$, defined by (77), the optimal controls are given by (65), (67), and (75). The region that remains, that is, that which satisfies

$$\frac{x_2^\circ - \varepsilon_2 - \delta}{x_1^\circ - \varepsilon_1} \le \frac{x_2^\circ - \varepsilon_2}{x_1^\circ - \varepsilon_1 - \delta} , \tag{79}$$

is a joint δ-capture region (a draw is not possible in this case) with controls (67) and

$$v_1^* = \gamma^2\bar{u} , \quad v_2^* = \gamma\bar{u}(1 - \gamma^2)^{1/2} . \tag{80}$$

These regions and example optimal trajectories are shown in figure 10(a).

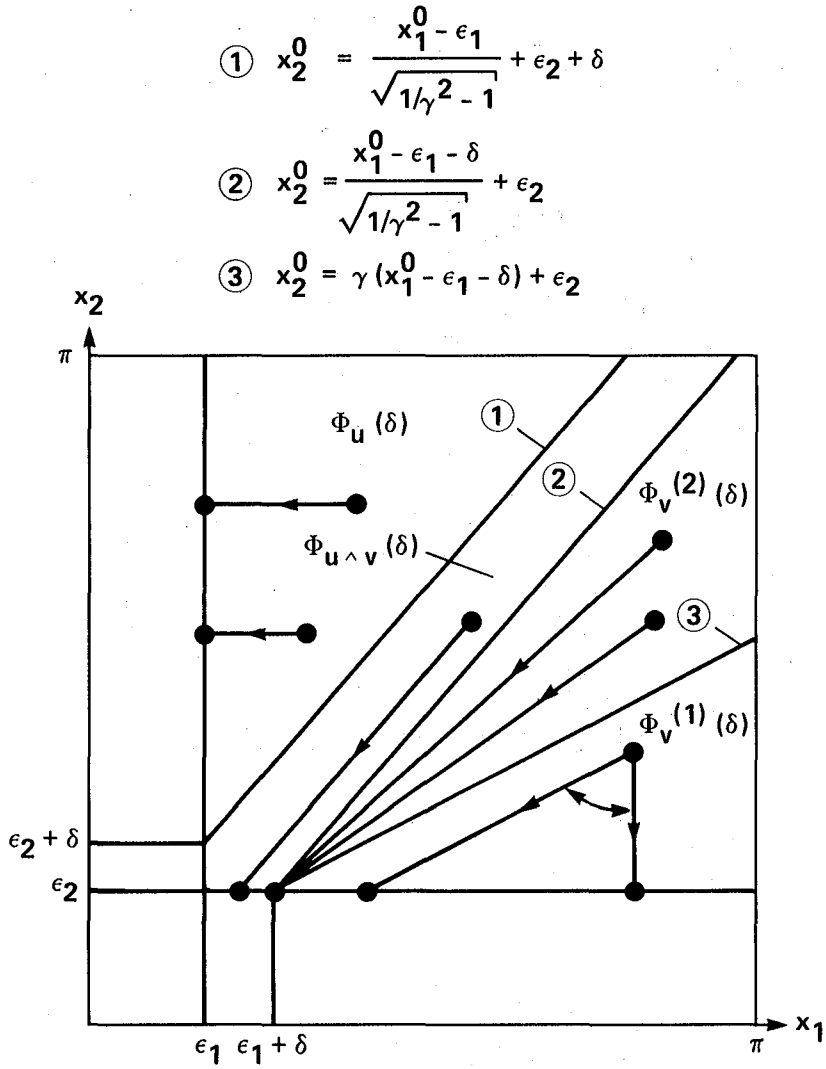

(a) $\gamma < 1$.

Figure 10.- Regions and optimal trajectories in the playing space: turret game with circular control constraint and time-optimality.

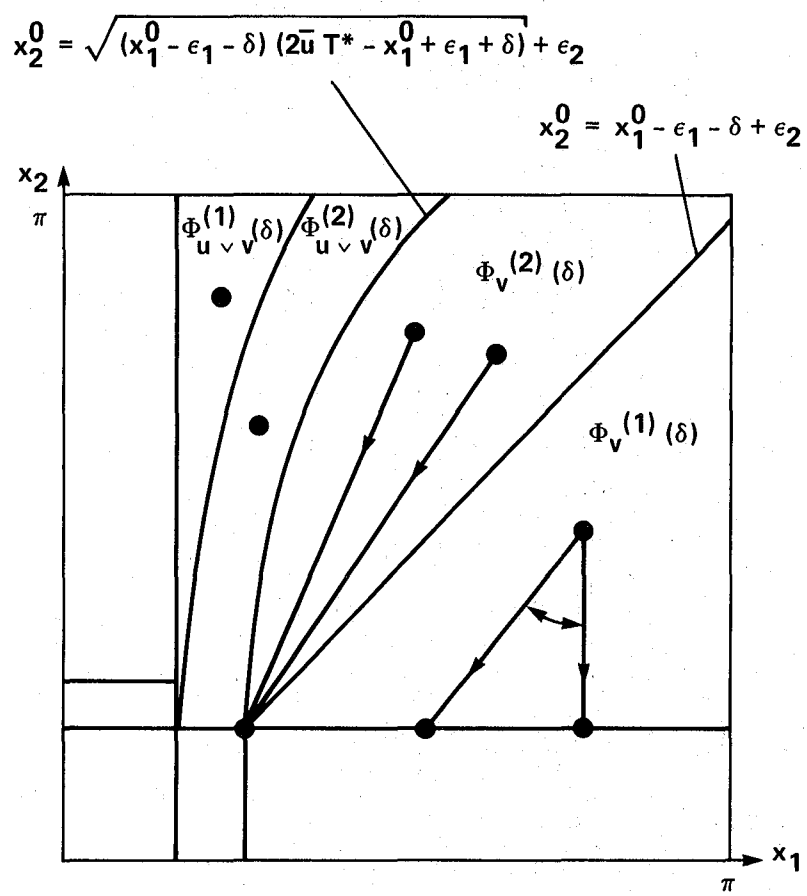

(b) $\gamma = 1$.

Figure 10.- Continued.

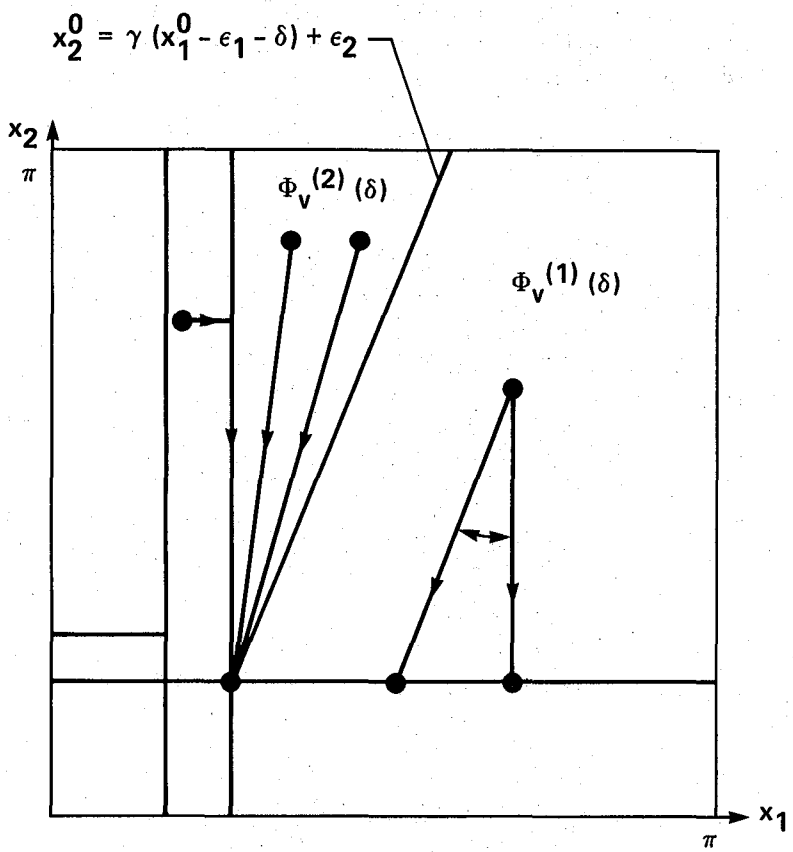

(c) $\gamma > 1$.

Figure 10.- Concluded.

The cases $\bar{u} = \bar{v}$ and $\bar{u} < \bar{v}$ may be easily inferred from the results for the case (61). As $\gamma \to 1$ from below, the slope of the boundary line between regions $\Phi_v^{(2)}(\delta)$ and $\Phi_{u\wedge v}(\delta)$ becomes infinite, and region $\Phi_u(\delta)$ vanishes. Further, v cannot capture in any finite time from points on this boundary and, therefore, there is a draw region, the extent of which depends on the prespecified value of T^*. As for the linear constraint case, this region is subdivided into two subregions. In the first, $\Phi_{u\vee v}^{(1)}(\delta)$, the draw is forced in the sense that the only alternative to draw for v is capture by u. In the second, $\Phi_{u\vee v}^{(2)}(\delta)$, v has the unilateral choice between draw and joint δ-capture, and according to our assumption he chooses draw.

To find the boundary of $\Phi_{u\vee v}^{(1)}(\delta)$, we integrate (21) and (22) using (65) and (67) backward from $(\varepsilon_1, \varepsilon_2 + \delta)$ over an interval of time T^*; the result is that $\Phi_{u\vee v}^{(1)}(\delta)$ is defined by

$$(x_2^\circ - \varepsilon_2 - \delta)^2 > 2\bar{u}T^*(x_1^\circ - \varepsilon_1) + (x_1^\circ - \varepsilon_1)^2 \ . \tag{81}$$

To find the boundary between $\Phi_{u\vee v}^{(1)}(\delta)$ and $\Phi_{u\vee v}^{(2)}(\delta)$, we integrate just as before, but start from terminal condition $(\varepsilon_1 + \delta, \varepsilon_2)$; the result is

$$(x_2^\circ - \varepsilon_2)^2 > 2\bar{u}T^*(x_1^\circ - \varepsilon_1 - \delta) + (x_1^\circ - \varepsilon_1 - \delta)^2 \ . \tag{82}$$

The region defined by (82) and the converse of (81) is $\Phi_{u\bar{\vee}v}^{(2)}(\delta)$. The region defined by the converse of (82) is $\Phi_v(\delta)$, which is subdivided into regions $\Phi_v^{(1)}(\delta)$ and $\Phi_v^{(2)}(\delta)$ as before (see fig. 10(b)).

Finally, for $\bar{u} < \bar{v}$ (fig. 10(c)), $\Phi_v(\delta)$ is the entire playing space, again composed of regions $\Phi_v^{(1)}(\delta)$ and $\Phi_v^{(2)}(\delta)$.

6. DISCUSSION

Although the turret game is a very simple and idealized problem, analysis of this game has revealed a rich variety of combat phenomena. First, note that the solution to this game exhibits many features commonly found in differential games, such as the existence of barriers and various types of "singular" surfaces. Two examples of singular surfaces are given by (52) and (58) with the inequality replaced by equality. We remark that the first of these is a singular surface of type (+, u, +), or a "universal" surface, in Isaacs' terminology (ref. 2), and the second is a surface of type (p, u, -).

The optimal strategies also exhibit features common in differential game solutions. In most regions of the state/parameter space, the optimal controls of both players are unique and constant. There are regions, however, in which the controls are (1) two-stage constant ($\Phi_u^{(2)}(\delta)$ and $\Phi_u^{(3)}(\delta)$ in fig. 7(a)), (2) nonunique ($\Phi_v^{(2)}(\delta)$ and $\Phi_v^{(3)}(\delta)$ in fig. 7(c) and $\Phi_v^{(1)}(\delta)$ in fig. 10), or (3) state-dependent ($\Phi_v^{(2)}(\delta)$ in fig. 10). We note that in many cases the optimal strategies are obvious; for example, from initial conditions in the region $\Phi_v^{(1)}(\delta)$ in figures 7 and 10, player v can capture u, before being himself captured, by simply "standing" and turning his turret at the maximum rate.

The turret game solution, however, shows that combat problems have many features not previously encountered in games of survival and pursuit-evasion. Perhaps the most interesting of these is the existence of a region (a surface in the limit as $\delta \to 0$) in which both players are locked into mutual destruction at the earliest possible time ($\Phi_{u\wedge v}$ in figs. 7(a) and 10(a)), in the sense that any deviation from this policy by one of the players will result in his unilateral capture by the other. This situation has been found to occur also in nonoptimal air combat simulations (ref. 26). Another interesting new feature is a region in which one of the players has the unilateral choice between a draw and mutual destruction at a time of his choosing ($\Phi_{u\bar{\vee}v}^{(2)}(\delta)$ in figs. 7(b) and 10(b)). These new phenomena are of obvious importance to air-to-air engagements and other forms of combat.

The idea of δ-combat, introduced to solve technical problems concerned with closure properties of the target sets, also has important practical implications. In the turret game, δ is the closest the winning player is allowed to approach his opponent's target at termination. Thus, the winning player can choose δ to specify the degree of risk of his own capture he is willing to accept.

It was remarked in section 3 that the event space in a combat game as defined here must be uniquely and unambiguously classifiable into the four regions $\Phi_u(\delta)$, $\Phi_v(\delta)$, $\phi_{u\vee v}(\delta)$, and $\Phi_{u\wedge v}(\delta)$, and further that these regions are invariant in the sense that there exist strategies that keep the trajectory within the region in which it starts until termination. The solution of the turret game clearly has these features. Moreover, the subregions such as $\Phi_u^{(i)}(\delta)$ in figure 7(a) and $\Phi_v^{(i)}(\delta)$ in

figures 7 and 10 are themselves invariant in this same sense. Therefore, the outcome and the optimal strategies of the combat depend solely on the problem data (including the initial state).

Because of past emphasis on pursuit-evasion problems, it is of interest to examine the turret game from a pursuit-evasion standpoint. First consider the (time-optimal) pursuit-evasion game with u the pursuer and v the evader (u/v) subject to (24) and (28). The necessary conditions give the optimal strategies as $u^* = \bar{u}$, $v_1^* = \bar{v}_1$, and $v_2^* = 0$ for $\bar{v}_1 \leq \bar{u}$, and capture occurs if $\bar{v}_1 < \bar{u}$. For v/u, the optimal controls are $v_1^* = 0$, $v_2^* = \bar{v}_2$, and u^* undefined, and capture always occurs.

Now suppose we (naively) attempt to construct the combat results from the pursuit-evasion results by assuming that whichever pursuit-evasion game ends in the least time will be the one played. Then, for $\bar{v}_1 \geq \bar{u}$, the v/u game will be played everywhere. For $\bar{v}_1 < \bar{u}$, the times of the two games must be compared. Integrating (21) and (22) with the two sets of controls shows that the u/v game will be played if

$$\frac{x_2^\circ - \varepsilon_2}{x_1^\circ - \varepsilon_1} > \frac{\gamma_2}{1 - \gamma_1} \tag{83}$$

and conversely for the v/u game. These results are shown in the playing space in figure 11. Note that the slope of the boundary line (83) is greater than the slope of the boundary lines (47) and (48).

Comparing figures 8 and 11, we see that in regions (*) on figure 11 the two analyses give the same solutions, but that in the other regions the solutions are dramatically different. In all these other regions, the pursuit-evasion solution indicates that v will win, v's optimal strategy is $(0, \bar{v}_2)$, and u's strategy is immaterial. In region (1), however, the combat game results show that if u plays $\bar{u}$ then u will win, and, moreover, he will win in minimum time if v persists in playing his pursuit-evasion-derived strategy. In (2), the combat results show that the best v can achieve is a draw and that he must play $(\bar{v}_1, 0)$ to do this; if he plays his pursuit-evasion strategy u will win. And in (3), v can in fact win but he must recognize and avoid u's target to do so.

Thus, from v's standpoint, the pursuit-evasion results frequently tell him he can win when he cannot; moreover, use of the pursuit-evasion strategies frequently will cause v to be captured when capture is avoidable, or lead him to be captured in minimum time when capture cannot be avoided. From u's standpoint, the pursuit-evasion results frequently tell him he will be captured and that his strategy selection is of no consequence, when in fact he has winning or draw strategies. Thus, the serious fallacy of using pursuit-evasion methods to "solve" combat problems (i.e., differential games between opponents with offensive capabilities and offensive objectives) is clear.

As a final point in our discussion, we wish to reemphasize the role of threat in optimal strategy selection in suitably formulated combat games. We have clearly seen above that both players combine offensive and defensive behavior in their optimal strategies. The winning player takes defensive measures to avoid being captured himself during his offense. At the same time the losing player applies a threat to the winner, that is, implements his offensive capability, in order to prevent his opponent from using the most damaging strategies (in terms of the formulated game's

cost). The result is that in a properly formulated combat game, just as in actual combat, both players combine a suitable blend of offensive and defensive maneuvering.

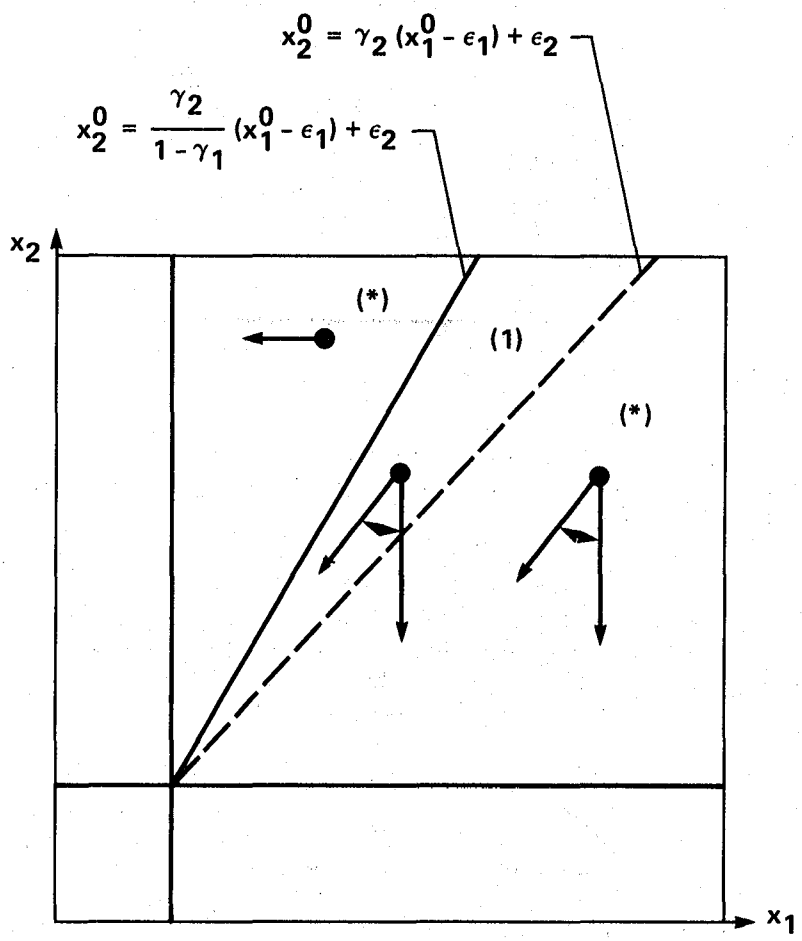

(a) $\gamma_1 < 1$.

Figure 11.- Results for turret game based on minimum-time pursuit-evasion games.

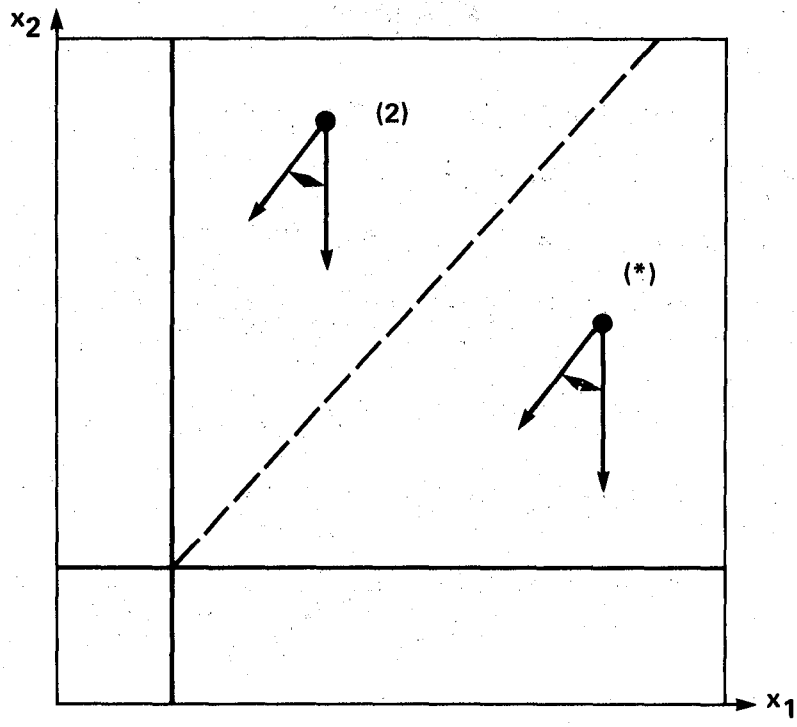

(b) $\gamma_1 = 1.$

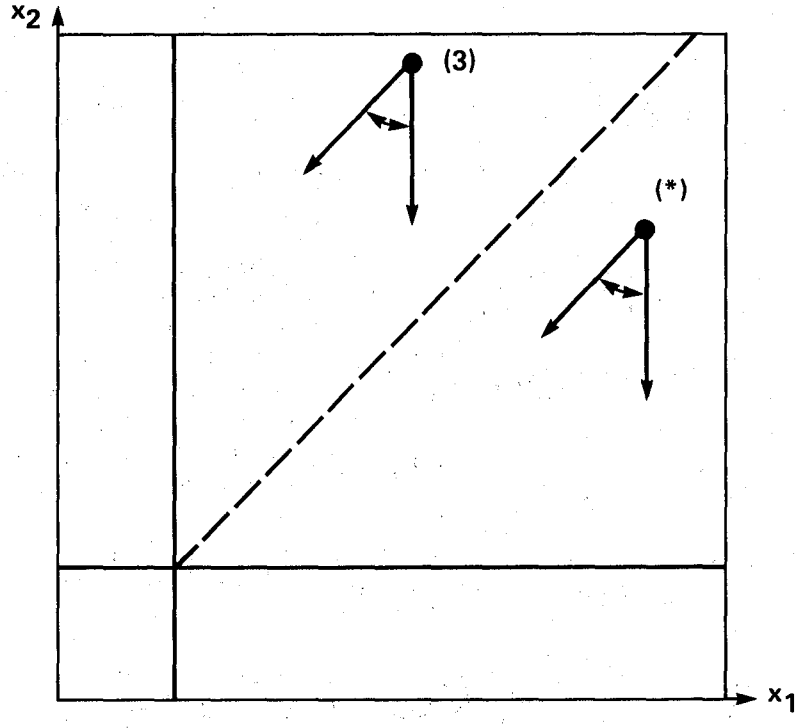

(c) $\gamma_1 > 1.$

Figure 11.- Concluded.

REFERENCES

1. Friedman, A.: Differential Games. Wiley, Interscience, New York, 1971.

2. Isaacs, R.: Differential Games. Wiley, New York, 1965.

3. Hajek, O.: Pursuit Games. Academic Press, New York, 1975.

4. Roxin, E. O.; Liu, P-T.; and Sternberg, R. L.: Differential Games and Control Theory. Marcel Dekker, New York, Vol. 1, 1974; Vol. 2, 1977.

5. Leondes, C. T., ed.: Control and Dynamic Systems — Advances in Theory and Applications. Vol. 17, Academic Press, New York, 1981.

6. Baron, S.; Chu, K.-C.; Ho, Y. C.; and Kleinman, D. L.: A New Approach to Aerial Combat Games. NASA CR-1626, 1970.

7. Breakwell, J. V.; and Merz, A. W.: Toward a Complete Solution of the Homicidal Chauffeur Game. Proceedings of the First International Conference on the Theory and Applications of Differential Games, U. of Massachusetts, Sept. 1969.

8. Merz, A. W.: The Homicidal Chauffeur. AIAA J., vol. 12, 1974, pp. 259-260.

9. Merz, A. W.: The Game of Two Identical Cars. Multicriteria Decision Making and Differential Games, G. Leitmann, ed., Plenum Press, New York, 1976, pp. 421-442.

10. Breakwell, J. V.; and Merz, A. W.: Minimum Required Capture Radius in a Coplanar Model of the Aerial Combat Problem. AIAA J., vol. 15, 1977, pp. 1089-1094.

11. Merz, A. W.: The Game of Two Identical Cars. J. of Optimization Theory and Applications, vol. 9, 1972, pp. 324-343.

12. Olsder, G.; and Breakwell, J. V.: Role Determination in Aerial Dogfights. Int. J. of Game Theory, vol. 3, 1974, pp. 47-66.

13. Pachter, M.; and Getz, W. M.: The Geometry of the Barrier in the Game of Two Cars. Optimal Control Applications and Methods, vol. 1, 1980, pp. 103-118.

14. Kelley, H. J.; and Lefton, L.: Estimation of Weapon-Radius vs. Maneuverability Tradeoff for Air-to-Air Combat. AIAA J., vol. 15, 1977, pp. 145-148.

15. Ho, Y. C.: Differential Games, Dynamic Optimization and Generalized Control Theory. J. of Optimization Theory and Applications, vol. 6, 1970, pp. 179-209.

16. Rajan, N.; Prasad, U. R.; and Rao, N. J.: Pursuit-Evasion of Two Aircraft in a Horizontal Plane. J. Guidance Control, vol. 3, 1980, pp. 261-267.

17. Jarmark, B. S. A.; Merz, A. W.; and Breakwell, J. V.: The Variable-Speed Tail-Chase Aerial Combat Problem. J. Guidance Control, vol. 4, 1981, pp. 323-328.

18. Prasad, U. R.; Rajan, N.; and Rao, N. J.: Planar Pursuit-Evasion with Variable Speeds. Pts. 1, 2, J. of Optimization Theory and Applications, vol. 33, 1981, pp. 401-432.

19. Peng, W. Y.; and Vincent, T. L.: Some Aspects of Aerial Combat. AIAA J., vol. 13, 1975, pp. 7-11.

20. Kelley, H. J.; and Lefton, L.: Calculation of Differential-Turning Barrier Surfaces. J. Spacecraft & Rockets, vol. 14, Feb. 1977.

21. Pachter, M.; and Getz, W. M.: Two Target Pursuit-Evasion Differential Games in the Plane. J. of Optimization Theory and Applications, vol. 34, 1981, pp. 383-403.

22. Getz, W. M.; and Pachter, M.: Capturability in a Two-Target Game of Two Cars. J. Guidance Control, vol. 4, 1981, pp. 15-21.

23. Blaquiere, A.; Gerard, F.; and Leitmann, G.: Quantitative and Qualitative Games, Academic Press, New York, 1969.

24. Getz, W. M.; and Leitmann, G.: Qualitative Differential Games with Two Targets. J. Math. Analysis and Applications, vol. 68, 1979, pp. 421-430.

25. Davidowitz, A.; and Shinar, J.: An Eccentric Two-Target Differential Game Model for Qualitative Air-to-Air Combat Analysis. AIAA Paper 83-2122, Gatlinburg, Tenn., Aug. 1983.

26. Herbst, W. B.: Dynamics of Air Combat. J. of Aircraft, vol. 20, 1983, pp. 594-598.

1. Report No.	2. Government Accession No.	3. Recipient's Catalog No.
NASA TM-85927		

4. Title and Subtitle	5. Report Date
A FORMULATION AND ANALYSIS OF COMBAT GAMES	April 1984
	6. Performing Organization Code
7. Author(s) M. Heymann, Technion, Israel Institute of Technology, Haifa, Israel; M. D. Ardema; and N. Rajan, Aero. & Astro. Dept., Stanford U., Calif.	8. Performing Organization Report No. A-9678
	10. Work Unit No. T-3309
9. Performing Organization Name and Address Ames Research Center Moffett Field, CA 94035	11. Contract or Grant No.
	13. Type of Report and Period Covered Technical Memorandum
12. Sponsoring Agency Name and Address National Aeronautics and Space Administration Washington, DC 20546	14. Sponsoring Agency Code 505-34-11

15. Supplementary Notes

Point of contact: Dr. Mark Ardema, M/S 210-9, Ames Research Center, Moffett Field, CA 94035, (415)965-5433 or FTS 448-5433

16. Abstract

Combat is formulated as a dynamical encounter between two opponents, each of whom has offensive capabilities and objectives. With each opponent is associated a target set in the event space in which he endeavors to terminate the combat, thereby winning. If the combat terminates in both target sets simultaneously, or in neither, a joint capture or a draw, respectively, is said to occur. Resolution of the encounter is formulated as a combat game; namely, as a pair of competing event-constrained differential games. If exactly one of the players can win, the optimal strategies are determined from a resulting constrained zero-sum differential game. Otherwise the optimal strategies are computed from a resulting non-zero-sum game. Since optimal combat strategies may frequently not exist, approximate or δ-combat games are also formulated leading to approximate or δ-optimal strategies. To illustrate combat games, an example, called the turret game, is considered. This game may be thought of as a highly simplified model of air combat, yet it is sufficiently complex to exhibit a rich variety of combat behavior, much of which is not found in pursuit-evasion games.

17. Key Words (Suggested by Author(s))	18. Distribution Statement
Differential games, Air combat, Combat problems, Turret game, Two-Target Games, Pursuit-evasion	Unlimited Subject Category - 08

19. Security Classif. (of this report)	20. Security Classif. (of this page)	21. No. of Pages	22. Price*
Unclassified	Unclassified	40	A03

*For sale by the National Technical Information Service, Springfield, Virginia 22161