General Disclaimer

One or more of the Following Statements may affect this Document

- This document has been reproduced from the best copy furnished by the organizational source. It is being released in the interest of making available as much information as possible.

- This document may contain data, which exceeds the sheet parameters. It was furnished in this condition by the organizational source and is the best copy available.

- This document may contain tone-on-tone or color graphs, charts and/or pictures, which have been reproduced in black and white.

- This document is paginated as submitted by the original source.

- Portions of this document are not fully legible due to the historical nature of some of the material. However, it is the best reproduction available from the original submission.

Produced by the NASA Center for Aerospace Information (CASI)

(NASA-CR-173518) A NORMAL INCIDENCE, HIGH RESOLUTION X-RAY TELESCOPE FOR SOLAR CORONAL OBSERVATIONS Semiannual Progress Report, 1 Nov. 1983 - 30 Apr. 1984 (Smithsonian Astrophysical Observatory) 67 p N84-23412
Unclas
G3/89 19078

A NORMAL INCIDENCE, HIGH RESOLUTION X-RAY TELESCOPE FOR SOLAR CORONAL OBSERVATIONS

Grant NAGW-397

Semiannual Progress Report No. 3

For the period 1 November 1983 through 30 April 1984

Principal Investigator:

Dr. Leon Golub

April 1984

MAY 1984
RECEIVED
NASA STI FACILITY
ACCESS DEPT.

Prepared for

National Aeronautics and Space Administration

Washington, D. C. 20546

Smithsonian Institution
Astrophysical Observatory
Cambridge, MA 02138

The Smithsonian Astrophysical Observatory
is a member of the
Harvard-Smithsonian Center for Astrophysics

The NASA Technical Officer for this grant is Dr. J. David Bohlin, Code EZ-7
NASA Hdqs., Washington, D.C. 20546

A NORMAL INCIDENCE, HIGH RESOLUTION X-RAY TELESCOPE FOR SOLAR CORONAL OBSERVATIONS

Grant NAGW-397

Semiannual Progress Report No. 3

For the period 1 November 1983 through 30 April 1984

Principal Investigator:

Dr. Leon Golub

April 1984

Prepared for

National Aeronautics and Space Administration

Washington, D. C. 20546

Smithsonian Institution
Astrophysical Observatory
Cambridge, MA 02138

The Smithsonian Astrophysical Observatory
is a member of the
Harvard-Smithsonian Center for Astrophysics

The NASA Technical Officer for this grant is Dr. J. David Bohlin, Code EZ-7
NASA Hdqs., Washington, D.C. 20546

NIXT Progress Report

Table of Contents

0. Introduction 3

1. Telescope Assembly Engineering Design 4

a. NIXT Preliminary Analysis Report 5

2. NIXT Rocket Payload Engineering Studies 16

a. Calculated Weights NIXT Program 17

b. NIXT Thermal Issues 19

c. NIXT Graphite/Epoxy Tubes 22

d. Heat Treatment of NIXT Invar Rings 39

3. Hasselblad Camera for Rocket Flight 52

Appendix: Performance of Transition Metal-Carbon Multilayer Mirrors from 80 to 350 eV. 60

0. Introduction

This Progress Report describes the work which has been performed during the past six months under NASA Grant NAGW-397, "A Normal Incidence X-ray Telescope". Our effort has been directed primarily toward design of a telescope assembly which, after fabrication, will be shipped to the IBM Watson Research Center for integration with the mirror fabrication process. The assembly has also been engineered so that it will fit into the Black Brant rocket skin and be able to survive sounding rocket launch conditions. We have also been in contact with the Hasselblad Co., with the result that they are willing to modify, test and provide to us a flight-ready camera at a very reasonable cost (see §3.).

Our other work during the past six months is a continuation of activities which were described in detail in our last progress report; thus they will not be discussed herein. These include: prefilter fabrication, multilayer testing, x-ray image quality tests and film calibration. We expect that these matters will be discussed in our next progress report.

1. Telescope Assembly Engineering Design

NIXT Preliminary Analysis Report

Preliminary Structural Design and Analysis of the NIXT Experiment

By L. M. Cohen

CONTENTS

			Page
SECTION	1.0	Introduction	2
	2.0	NIXT Optical and Structural Requirements .	2
	3.0	Structural Analysis and Design Assumptions	2
	4.0	Preliminary Sizing of NIXT G/E Tube . . .	3
	5.0	Super Invar Ring Mirror Support	4
	6.0	Finite Element Modelling of the NIXT Experiment	5
	7.0	Layup Analysis	6
	8.0	Analysis Results	6
	9.0	Discussion	8

1.0 Introduction

The NIXT experiment is designed to be a rocket launched Normal Incidence x-ray telescope with an inter-optic spacing of ~59", an overall diameter of ~16" and overall length of ~85". The purpose of this design and analysis effort was to determine, in a preliminary sense, the overall structural requirements (sizing of parts) considering the thermal, vibratory and 'g' unloading environments that the NIXT will be subjected to. It was determined (through this analysis) that the main metering tube (see figure 1) between the primary and secondary mirrors be fabricated of a high modulus (HM) graphite- epoxy (G/E) composite. The primary mirror mounting ring and the associated tube flanges were determined to be made of Super Invar (Guterl). All other structural components will be fabricated from aluminum.

2.0 NIXT Optical and Structural Requirements

The NIXT optical schematic, drawing NIXT-1000, shows a defocus tolerence of 0.0010", a decenter tolerence of 0.0035" and an angular tilt of the secondary with respect to the primary optical axis of 25 to 30 arc seconds.

The Nike Black Brant V random vibration specification is of order 20g's rms (1 sigma) for design qualification.

The operational temperature range for $\lambda/10$ optical images is $72^{\circ}F \pm 10^{\circ}$ and the temperature range with TBD degraded imagery is $72^{\circ}F \pm 40^{\circ}F$. No specification was given for the maximum temperature excursion from $72^{\circ}F$ for preflight, flight or post flight operations. However, the maximum temperature that the main structure (G/E tube, invar ring and flanges) might experience is $\sim 135^{\circ}F$. This temperature would then be considered as a structural failure temperature.

3.0 Structural Analysis and Design Assumptions

The following describes the assumptions used for this preliminary work.

1. Operational temperature range > R.T. $\pm$ $10^{\circ}F$ ($\pm 40^{\circ}F$ DESIRED).

2. Use 60 g's static (3*20g's 1 Sigma) equivalent of the true dynamic environment.

ORIGINAL PAGE IS
OF POOR QUALITY

3. Use a factor of safety (R) of ≥ 2.0 (compared to ultimate) for all composite materials. This assumption is based on the "first ply failure criteria" (usually limited by the inplane shear strength).

4. Use a factor of safety of ≥ 2.0 (compared to yield) for aluminum components.

5. The maximum stress in the invar parts should be kept below the micro yield stress. Use 6000psi. as the design goal (HEAO-B LR35 Invar).

6. The maximum shear stress in all epoxy bonds utilizing filled Hysol 9313 or equivalent should be $\geq$ 2000psi (factor of safety of 2.0 on ultimate - ref. Max Plank data).

4.0 Preliminary Sizing of NIXT G/E Tube

A) Defocus

The Coefficient of thermal expansion (CTE) of the main metering tube in the axial direction should be limited to:

$$\text{CTE (max)} = \frac{0.001''}{(60'')(40^{\circ}F)} = 0.42 \text{ PPM}/^{\circ}F$$

B) Despace

The deflection of the secondary with respect to the primary must be limited by:

$\Delta \leq 0.0035'' = \Delta$ Bending + Δ Shear

Assuming a tube diameter of ~ 14" with an axial Young's modulus of 12 Mpsi, the G/E tube wall thickness $\geq$ 0.02".

ORIGINAL PAGE IS
OF POOR QUALITY

C) G/E Tube Buckling

The tube will buckle when the critical stress exceeds the theoretical critical stress.

For a thin shell:

$\sigma_1 \sim 0.6 \frac{Et}{r}$

$\sigma_{11}(\text{allow}) = \frac{\sigma_1}{6}$ (to account for imperfections in shell)

Equating σ_{11} to $\frac{Mc}{I}$ for a 60 'g' static acceleration we obtain $t \geq 0.0035''$

D) G/E Tube Strength (axial)

Maximum inplane force is ~320lb/in for a 60 g transverse acceleration (at the base of the telescope tube). For a tube wall thickness of 0.08" (~ twice the above required wall thickness), R > 15.

E) Epoxy Shear (Tube to flange connection)

Maximum inplane force from D) is ~320 lb/in.
Here we assume that the bonds length is 1.0"
Avg shear ~320psi
Peak shear~1500psi ($\leq$ 2000psi).

5.0 Super Invar Ring Mirror Support

The primary mirror is made from Zerodur which exhibits a CTE of ~0. PPM/°F. In order to minimize the imposed forces on the mirror from its holding structure, the Δ CTE between the two should be small. The invar ring has a CTE between 0.18 and 0.36 PPM/°F, thereby creating a maximum Δ CTE of 0.36 PPM/°F. To obtain the 0.18 PPM/°F CTE, the part has to undergo a specific heat treatment which includes a quench from 1525°F to RT within 10 seconds. This cooling time cannot be accomplished with a part nominally 1.0" thick. Therefore, the actual CTE will be between 0.18 and 0.36. All thermal analyses have been performed with a Δ CTE of 0.35 PPM/°F.

Figure 2 shows the basic geometry of the mirror support ring. The mirror is bonded inside the invar ring at 3 circumferential locations for ~2.9" (8.6" total circumferential bond - 8.6 in^2 total bonding surface). The ring is then attached to the rocket skin at 3 locations clocked 60° to each of the bonding locations. This clocking is used to provided a measure of radial thermal expansion relief. The bonding areas are also centered about the midplane of the mirror so as to produce only in plane (normal to the optical axis) forces in the mirror which minimizes the figure change. A bond thickness of 0.005" was used as the baseline thickness. Using this nominal bond thickness, the maximum stress that the epoxy would see is ~70psi/$^\circ$F. For failure conditions the allowable temperature rise would then be ~4200psi/70psi/$^\circ$F = 60°F(Δ). It is quite probable that the maximum Δ T will be $\leq$ 65°F. (Note: The 70psi/$^\circ$F is based on a totally constrained epoxy joint. Realistically, this value would be reduced by about a factor of 2 when one includes the movement and flexibility of the connected members. This will be discussed in a later section.)

6.0 Finite Element Modelling of the NIXT Experiment

A three dimensional finite element model (using the finite element method of structural analysis) was made of a 180° section of the NIXT experiment. The primary mirror, epoxy joint (between mirror and ring), invar ring and invar flanges were modelled using solid finite elements. The G/E tubes and all structural associated with the secondary mirror and its support were modelled using plate (bending and membrane) finite elements. The 180° section was used because of the assumed geometrical symmetry. The overall system model did not include details of the brackets used to support the fine sun sensor or similar components at the font end. Lumped masses of these components were included. This analysis (for the brackets, etc.) was performed using a model of only that portion of the telescope structure (to minimize computer costs) as well as hand calculations.

The system model was exercised for a 1g transverse environment and a 100°F Δ T excursion. The sub models were exercised for 1g axial only. The transverse acceleration yielded the maximum design forces in the tube (membrane), invar components and determined the required number of bolts connecting the tube invar flanges to the invar ring. The 100° Δ T case yielded the Δ T defocus limit and the maximum stress in the epoxy joint between the mirror and the invar support ring. The 1g axial cases yielded the maximum bending moment in the G/E tube at the front

ORIGINAL PAGE IS
OF POOR QUALITY

end and the maximum stresses in the secondary mirror support structure.

7.0 Layup Analysis

From section 4.0, we see that the G/E tube connecting the primary and secondary mirrors most have

a) $t \geq 0.035"$
b) CTE ≤ 0.42PPM/^{o}F
c) $E \geq 12.0$MPSI

in order to meet the preliminary requirements. Therefore, the "LAYUP" program was used to determine the layup of the proposed laminate. A high modulus 50Mpsi G/E system was chosen. The laminate was assumed to be aluminum foil coated so as to reduce the dimensional effects of the moisture transport problem . The effective laminate properties using a total thickness of 0.084" (.001" alum. foil and .001" epoxy on each surface of the 0.080" basic laminate) are as follows:

E (axial) = 16.0 Mpsi ($\geq$ 12.0 Mpsi)
E (hoop) = 8.7 Mpsi (no requirement)
CTE (axial) = -0.02 PPM/^{o}F ($\leq$ 0.42 Mpsi)
CTE (hoop) = 1.07 PPM/^{o}F (no requirement)

The layup of the laminate is $[0,80,\pm30,80,0,\pm30]_s$ with each ply 0.005" thick plus the 0.002" foil/epoxy layer on the outside surfaces. This high modulus G/E material is assumed to have the following unit ply strength characteristics:

X = 175 ksi (ult. tensile strength in 0° direction)
X^{1} = 120 ksi (ult. compression strength in 0° direction)
Y = 5.8 ksi (ult. tensile strength in 90° direction)
Y^{1} = 36.2 ksi (ult. compression strength in 90° direction)
S = 10.0 ksi (ult. shear strength)

8.0 Analysis Results

The maximum axial force in the G/E tube due to the 60g overturning condition is ~ 600lb/in. This force translates into an R ~ 7.5 using the first ply failure criteria as discussed earlier. The maximum bending moment in the G/E tube due to the 60g axial condition is ~ 32 in lb/in which translates into an R ~ 2.6.

ORIGINAL PAGE IS
OF POOR QUALITY

The primary mirror to invar ring epoxy bond originally baselined as 0.005" thick was later considered to be 0.020" thick. For this case, ultimate failure of the epoxy bond would occur at a Δ T of ~ 88°F and at an equivalent acceleration in excess of 1000g's. Ultimate failure as described above is when τ max $\geq$ 4200psi and/or σ tensile $\geq$ 7400psi for the filled Hysol 9313 epoxy.

The maximum stress in the Zerodur mirror is ~ 9psi/g or 540psi for the 60g case and ~ 300psi for the 100°F Δ T case or an absolute maximum stress of ~ 840psi, less than the 1000psi allowable based on long term stress (we could use ~ 2000psi for short term dynamic behavior).

One g unloading of the structure produces a decenter equal to ~ 0.0036" (~3% over budget). This decenter is caused by the ovality at the secondary mirror support. However, these calculations were performed with only 3 spiders at the secondary not 6 as is the current design which will reduce the above value.

The maximum allowable Δ T excursion is ~ 33°F in order to maintain an acceptable operational optical image. This limitation was due to the use of aluminum in the area of the secondary and not limited by the CTE of the G/E tube. (assuming that it is made to the specification).

The maximum stresses in any of the aluminum components at the front end of the mirror system are less than 5000psi.

The stresses in the G/E tube to invar flange epoxy joint will be ~ 750psi for the 60g case. The maximum stress (failure) for the Δ T environment was not determined but should probably be > the 88°F Δ T as described earlier for the mirror/ring bond. However, the total stress in that bond might come close or exceed the allowable stress if one considers accelerations and heat up (of ~ 24°F) together.

Elastic buckling of the G/E tube is not a problem (the tube is about twice as thick as required).

The maximum stress in the invar parts due to the 60g environment is ~ TBD psi and due to the Δ T is ~ TBD psi.

No calculations were made concerning the G/E tube or its associated flanges and attachments connecting the invar ring to the camera.

The bolts used to connect the G/E tube invar flange to the invar

ring were determined to be 3/8"D (or similar) with an allowable tensile strength of 10,000psi or greater located every 22 1/2° c/c.

9.0 Discussion

A preliminary analysis was performed to form the basis of overall structural design concept of the NIXT experiment. As it currently stands, the design should work. However, there are certain areas that if the time and money were available should be looked at in more detail. These areas are described below.

A) G/E tube to invar flange epoxy joint.
B) Strength of the G/E tube in the area of the secondary mirror support.
C) Dynamic motion of the secondary with respect to the inside of the rocket skin.
D) Camera G/E tube, flange and epoxy joint.

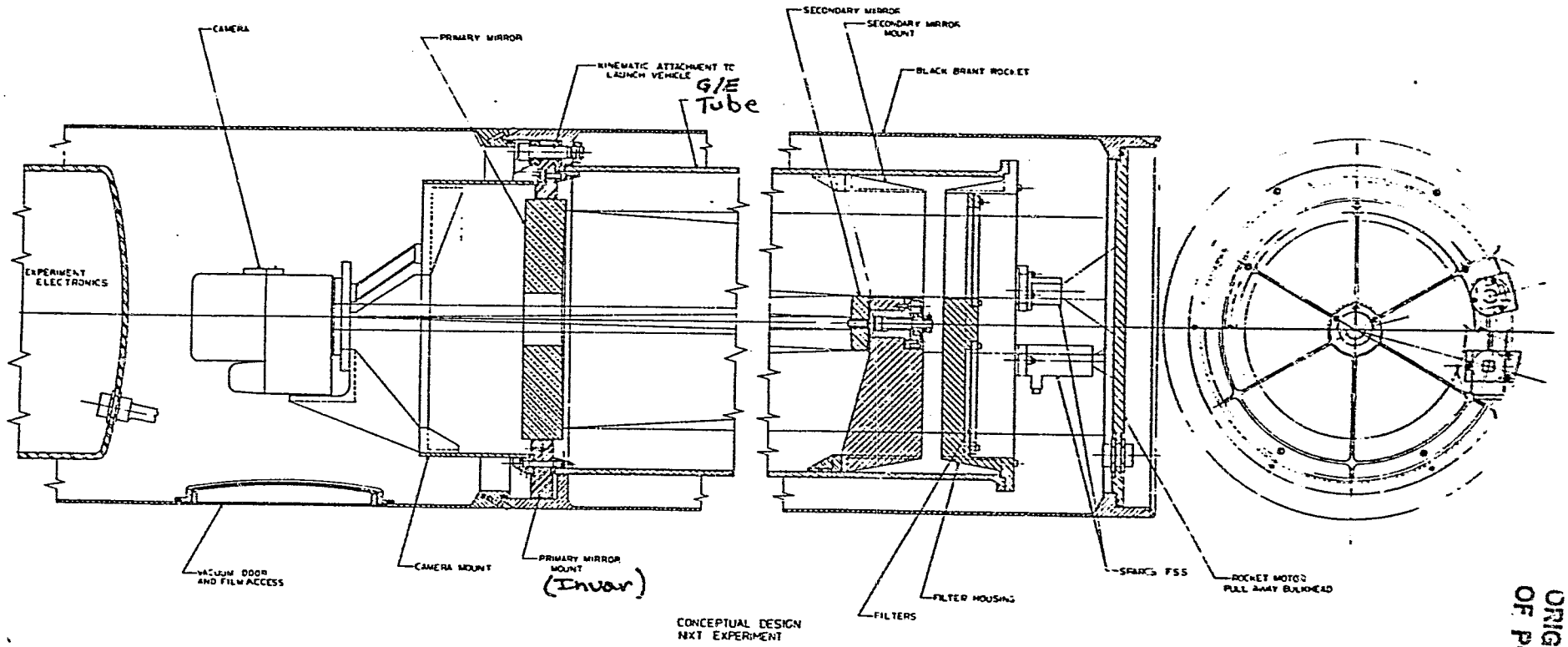

CONCEPTUAL DESIGN
NXT EXPERIMENT

Figure 1

ORIGINAL PAGE IS
OF POOR QUALITY

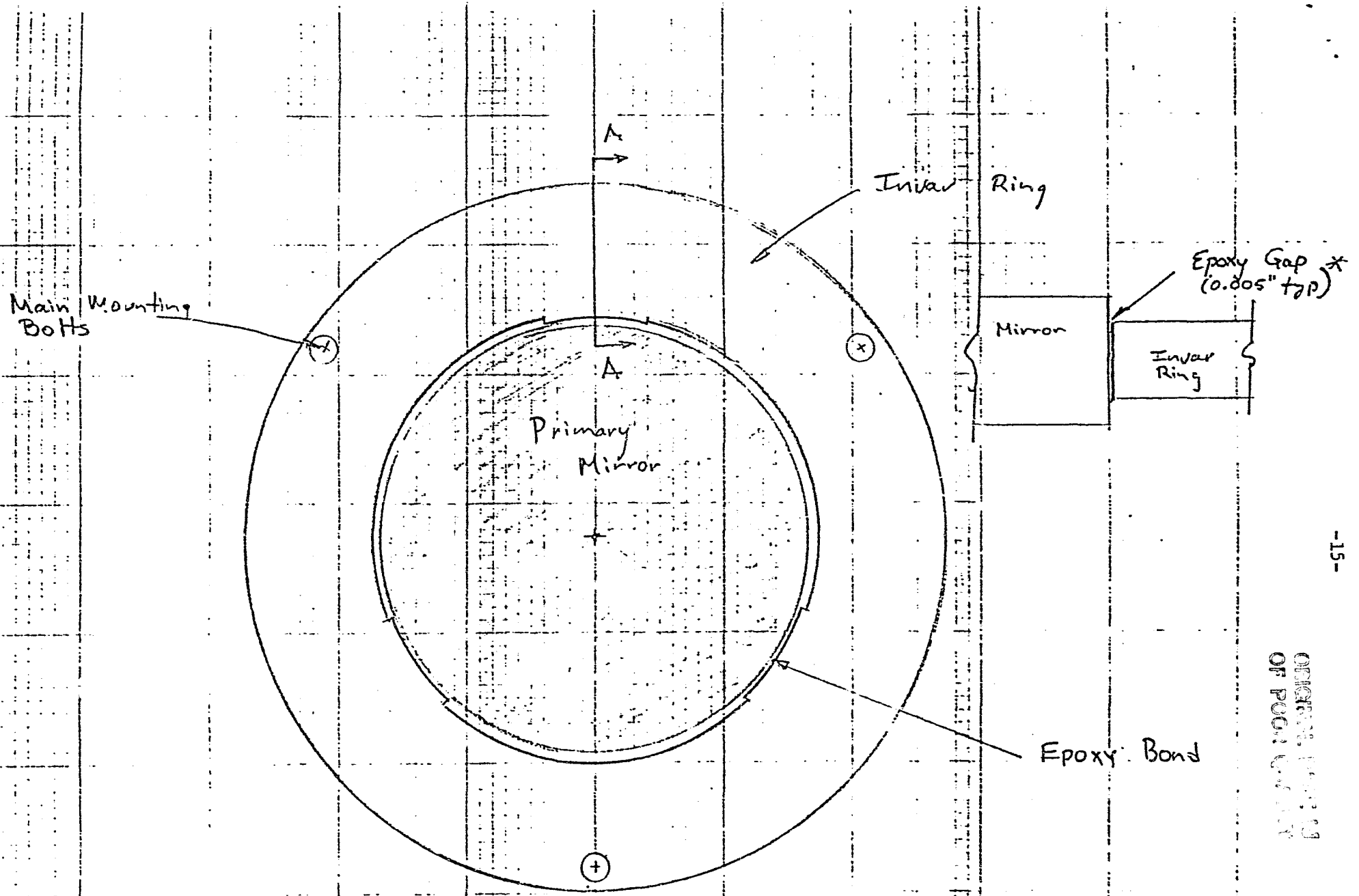

Figure 2

* .005" baseline later changed to 0.020"

ORIGINAL PAGE IS OF POOR QUALITY

2. NIXT Rocket Payload Engineering Studies

a. Calculated Weights - NIXT Program

ORIGINAL PAGE IS
OF POOR QUALITY

UNITED STATES GOVERNMENT

memorandum

DATE: December 12, 1983

REPLY TO ATTN OF: G.U. Nystrom GUN

SUBJECT: Calculated Weights NIXT Program

TO: Distribution

The attached sheet is a listing of component weights calculated for the current design. Also weights are alloted for designs yet to be completed. This listing will be updated as designs mature with personnel responsible for those designs requested to provide information for the update.

GUN:kg

Attachment

Distribution

P. Chemimets
L. Cohen
L. Golub

Buy U.S. Savings Bonds Regularly on the Payroll Savings Plan

☆ GPO: 1979 0-281-187 P.O. 4304

OPTIONAL FORM NO. 10
(REV. 7-76)
GSA FPMR (41 CFR) 101-11.6
5010-112

ORIGINAL PAGE IS
OF POOR QUALITY

NIXT PROGRAM
CALCULATED WEIGHTS

NOTE: These are the calculated weights to date and will be updated over life of program. * is an estimated value.

PART NAME	PART WEIGHT	QTY/REQ'D	TOTAL WEIGHT (LB.)
INVAR BASE PLATE	30.28 TOTAL	1	30.28
MOUNTING BOLTS	.13	3	.39
SPHERICAL MACOR WASHERS	.03	3 DUPLEX SETS	.18
TELESCOPE TUBE	23.63	1	23.63
CAMERA BASE RING*	4.63	1	4.63
CAMERA TUBE*	3.0	1	3.00
CAMERA MTG.*	1.0	1	1.00
SECONDARY ASSY			
MIRROR	.34	1	
SHAFT	.15	1	
PIVOT	.34	1	
PLATE ADJ.	.1	1	
NUT CLAMP	.01	1	
SPRING	.001	1	
NUT	.02	1	
BLADES	.1	6	
MAIN RING	.81	1	
MTG'S	.08	3	
SECONDARY ASSY WEIGHT			2.66
SECONDARY MOUNT	.15	3	.45
FWD CABLE	1	1	1
LISS MOUNT	.29	1	29
LISS SUN SENSOR	.46	1	.46
MASS MOUNT	.19	1	.19
MASS SUN SENSOR	.09	1	.09
UPPER HEAT SHIELD	8.84	1	8.84
LOWER HEAT SHIELD	7.83	1	7.83
WEIGHT HEAT SHIELD ISOLATORS	VARIES	9	.58
BASE HEAT SHIELD MTG.	.06	3	.18
FILTER*	4	1	4

b. NIXT Thermal Issues

ORIGINAL PAGE IS
OF POOR QUALITY

TO: George Nystrom
David Boyd
Leon Golub

FROM: Peter Cheimets

DATE: February 15,1984

SUBJECT: NIXT Thermal Issues

This memo is to discuss the design and testing steps taken in response Boyd's thermal analysis of the proposed NIXT sounding rocket design (dated 2/25/83).

The issues raised in that memo were in three areas:

1. The aerodynamic heating of the rocket skin and the shedding of that heat;

2. Keeping the hot skin from affecting the experiment;

3. Assuring that the prefilter will be capable of either withstanding the thermal load of the sun or reducing the amount of solar radiation that actually is converted to heat at the filter (reflecting it away).

As Dave points out the skin temperature will rise to 300 F very shortly after lift-off. The only effective way of shedding this primarily aerodynamic heating is to radiate it away. For this reason he has suggested that we thick anodize the outside surface of the rocket skin (thickness >.002"). This will raise the emissivity of the surface. It will also raise the absorptivity but as this surface will not be getting much of a solar load during the mission that should not be important.

The inside of the skin shall be left as machined as this will keep the emissivity low and minimize the radiation toward the telescope.

A radiation shield made of aluminum will be hung between the rocket skin and the experiment. It will be mounted between glass/epoxy spacers to reduce conductive heat transfer. Both sides of the shield will be left as machined and de-greased. In this way the shield will both block the thermal radiation from the rocket skin and stay relatively cool; there by not becoming an infrared source itself.

The only direct attachment point between the telescope and the rocket is at the main mirror support ring (NIXT-1000). This is attached by a three point kinematic mount. The mount consists of three bolts isolated from both the rocket skin and the mirror ring by MAYCOR spherical washers. The bolts when tightened will each preload

ORIGINAL PAGE IS
OF POOR QUALITY

a belleville washer to about 1500#. This will hold the ring in place but allow the rocket skin to expand relative to the telescope without imparting high radial load onto the ring and thus onto the mirror. In this way the telescope package should be inured to both the thermal variations of the rocket skin and its dimensional changes (due to thermal or aerodynamic loads).

The filters will be aluminized. This process of depositing a thin coat of aluminum on the surface of the filter will reduce by 90% the thermal load from solar heating. The coating will reflect most of the sun's radiation above the measured wave lengths. A number of experimental filters (>5) will be tested, both with and without coatings to see if melt down will be a problem. If the coated ones are not affected then flight filters will be made, tested here and then tested again in Goddard's solar simulator.

The testing that we will performed inhouse will be done in a bell jar that I've gained access to in Frank Rivera's lab. We will use a 1000 W tungsten filiment quartz bulb with the filters placed 28 cm away. The 28 cm seperation comes from the assumptions that: 1) the solar constant for radiation in all wave lengths is about 1000 W/sqm; 2) All the bulb's 1000W are completely converted to optical radiation; and 3) It is radiated evenly in a spherical pattern. This is a conservative test as at 28 cm the bulb looks more like a cylinder than a sphere. Therefore the flux should be higher than we calculated in assumption 3 (the surface area of a cylinder being proportional to 2 PI rather than 4 PI); This should compensate for assumption 2 which gives an the over-estimation of light flux.

The filters will be exposed to the light source for periods of 1 to 30 seconds depending on experimental conditions, light source over-heating, etc. They will first be placed far away from the light then moved closer and re-exposed until they begin to burn out. If we find that the "minimum-no-melt-distance" is within the bracket of what we can accurately determine as the distance at which the flux will equal one solar constant (about 5 to 10 cm considering our assumptions to calulate the 28 cm parameter) then an explicit calibration of the lamp will be necessary. The calibration will probably be done with film.

The successful coating method will be employed to make filters for the flight. These will also tested as described above and then sent to Goddard for final proofing in their solar simulator. If coated filters that will withstand the solar simulation cannot be made there is serious doubt of a successful flight of the telescope. One possible recourse is to make the filters from LEXAN. This require methods of manufacture that are both experimental and unfamiliar to us.

c. NIXT Graphite/Epoxy Tubes

CODE IDENT NO. 50944	SMITHSONIAN ASTROPHYSICAL OBSERVATORY CAMBRIDGE, MA.	CONTROL NO. NIXT-S-302	
		DATE 4/3/84	
		REV. LTR. B	PAGE 1 OF 15

ORIGINAL PAGE IS
OF POOR QUALITY

TECHNICAL SPECIFICATION

FOR THE

NIXT TELESCOPE SUPPORT TUBE

REV.	ECO NO.	DATE	TITLE	APPROVAL SIGNATURE	DATE
B	Initial Release	April 1984	Design Engr.	[illegible]	4/6/84
			Structural Engr.	Lister M. Green	4/6/84
			Project Engr.	G.O.N. (P.E.)	4/6/84
			Program Mgr.	[illegible]	4/9/84

CONTENTS

			Page
SECTION	1.0	SCOPE	3
	2.0	APPLICABLE DOCUMENTS	3
	3.0	REQUIREMENTS	4
	3.1	Configuration	4
	3.2	Material and Layups	4
	3.2.1	Vapor Barrier	5
	3.3	Thermal Mechanical Properties	6
	3.3.1	Tensile Modulus of Elasticity (E)	6
	3.3.2	Coefficient of Thermal Expansion (CTE)	11
	3.4	THERMAL ENVIRONMENT	11
	3.4.1	Operational	11
	3.4.2	Non-Operational	11
	3.5	Marking and Identification	11
	4.0	QUALITY ASSURANCE PROVISIONS	12
	4.1	Process Control	12
	4.1.1	Storage Prior to Vapor Barrier Application	12
	4.1.2	Vacuum Bake-Out Prior to Vapor Barrier Application	12
	4.1.3	Storage During Vapor Barrier Application	13
	4.1.4	Stabilization	13
	4.2	Surveillance	13
	4.3	Tests/Inspections	14
	4.3.1	Responsibility for Tests/Inspections	14
	4.3.2	Test Samples	14
	4.3.3	Mechanical Inspection	14
	5.0	PREPARATION FOR DELIVERY	14
	5.1	Preservation and Packaging	14
	5.2	Packing	15
	5.3	Marking	15

FIGURES

FIGURE	3-1	Typical Eyelet Installation	7
	3-2a	Axial Single-Overlap Wrap Configuration	8
	3-2b	Circumferential Single-Overlap Wrap Configuration	9
	3-3	Two-Layer Foil Seal Configuration	10

ORIGINAL PAGE IS
OF POOR QUALITY

1.0 SCOPE

This specification establishes the requirements for the fabrication and test of the Normal Incidence X-ray telescope (NIXT), secondary mirror support tube. The component is to be manufactured from graphite-epoxy material. The telescope secondary support tube is to be permanently coated with a metallic vapor barrier on all surfaces except on one end (see NIXT-1017). The vapor barrier is to prevent dimensional changes due to environmental humidity effects.

2.0 APPLICABLE DOCUMENTS

The following documents, of most recent revision on the date of contract award, may form a part of this specification to the extent specified herein:

NASA

MSFC 10M02442	Material Control for Contamination Due to Outgassing
JSC 07572	List of Materials Meeting Johnson Space Center Vacuum Stability Requirements.

SAO

NIXT - 1017	Tube, Secondary Mirror Support

MILITARY

Mil-P-116	Military Packaging Methods

OF POOR QUALITY

3.0 REQUIREMENTS

3.1 Configuration

The configuration shall be in accordance with SAO drawing NIXT - 1017.

3.2 Material and Layups

SAO has made a preliminary selection of Courtaulds HMS or equivalent (See Addendum) for the the laminate meterial with a symetric layup consisting from outer skin to midpoint of:

.0007"	Aluminum		Chomerics Film
.001"	Kapton		Chomerics Film
.001"	Epoxy		Chomerics Film
.011"	Courtaulds	HMS	+10°
.011"	"	"	+60°
.011"	"	"	-10°
.011"	"	"	-60°

Symetric

If the supplier intends to use another material or layup he is responsible for:

1) Informing SAO and receiving approval prior to fabrication;
2) Conferring with SAO as to the specific layup and receiving approval prior to fabrication;
3) Assuring conformation with documents MSFC document 50M02442 and JSC document 07572.

ORIGINAL PAGE IS
OF POOR QUALITY

3.2.1 Vapor Barrier

The secondary mirror support tube shall be permanently sealed on all surfaces except the ring attachment end (see Drawing NIXT-1017). On this surface a removable water vapor tight seal will be put on at the time of the application of the permanent barrier. By removing this barrier, SAO will be able to accurately register the cylinder end and the support ring for bonding. This surface must be machined (or manufactured) to the required surface finish prior to the application of the removable barrier.

The supplier shall be responsible for barrier material selection and method of application. Threaded metal inserts or eyelets should be used in sealing the inside diameters of the mounting holes in the telescope tubes (see Figure 3.1). The eyelets should be mounted in such a way as not to rotate. Their flanges should be flush with the tube surface and facing the ID of the tube or surface "D" (ref. NIXT-1017) whichever is applicable. The following are possible approaches for the vapor barrier applications. Others are acceptable, with prior SAO approval.

3.2.1.1 Aluminum Foil Construction

If the vendor chooses not to use Chomerics film as the permanent seal some possible alternatives methods are presented here.

The aluminum foil selected may be of any particular single ply thickness dimension between 0.0005 inches to 0.001 inches. An epoxy adhesive system may be used to adhere the foil to the graphite-epoxy parts. An impregnated scrim cloth may be used to control the bond-line thickness. Wrinkles in non-critical areas (as defined by the applicable drawing) are permissible with SAO approval.

3.2.1.1.1 Double Thickness Overlap Approach

A single thickness of foil may be wrapped such that an overlay (resulting from adjacent successive wraps) provides a 0.25 inch overlap maximum, for interwrap sealing (See Figure 3-2a and b).

3.2.1.1.2 Double Thickness Staggered Approach

Two single thickness foil applications may be used provided that the top or outer most is positioned such that it seals the lower seam completely (see Figure 3-3).

3.3 Thermal Mechanical Properties

This section defines the nominal properties of the finished component as designed by SAO using the materials and layup previously shown.

3.3.1 Tensile Modulus of Elasticity (E)

unit = 10^6PSI

3.3.1.1 For NIXT-1017 (with vapor barrier)

	Nominal
Longitudinal	13.2
Circumferential	7.8

ORIGINAL PAGE IS
OF POOR QUALITY

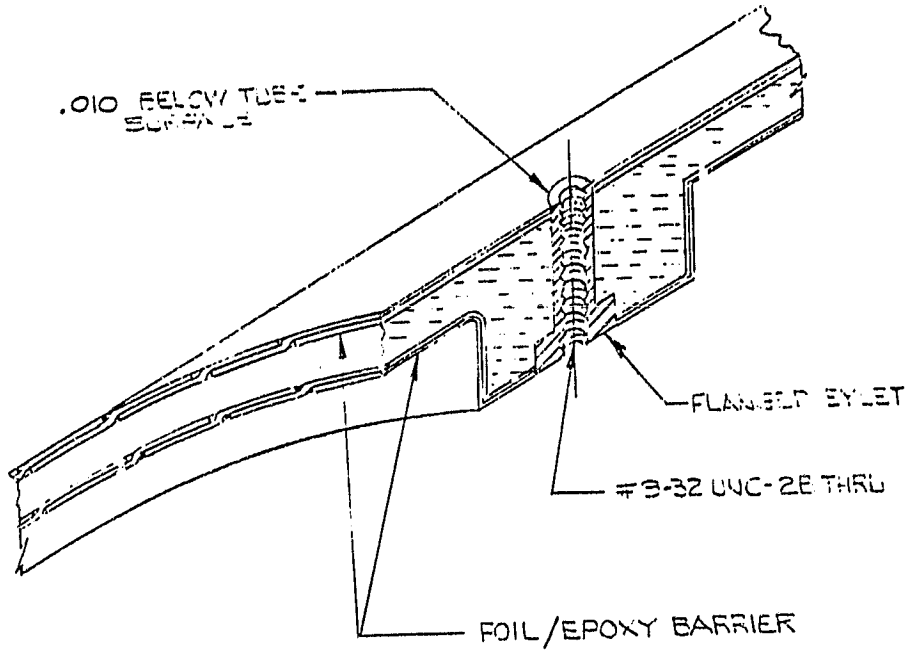

Figure 3-1. Typical Eyelet Installation

ORIGINAL PAGE IS
OF POOR QUALITY

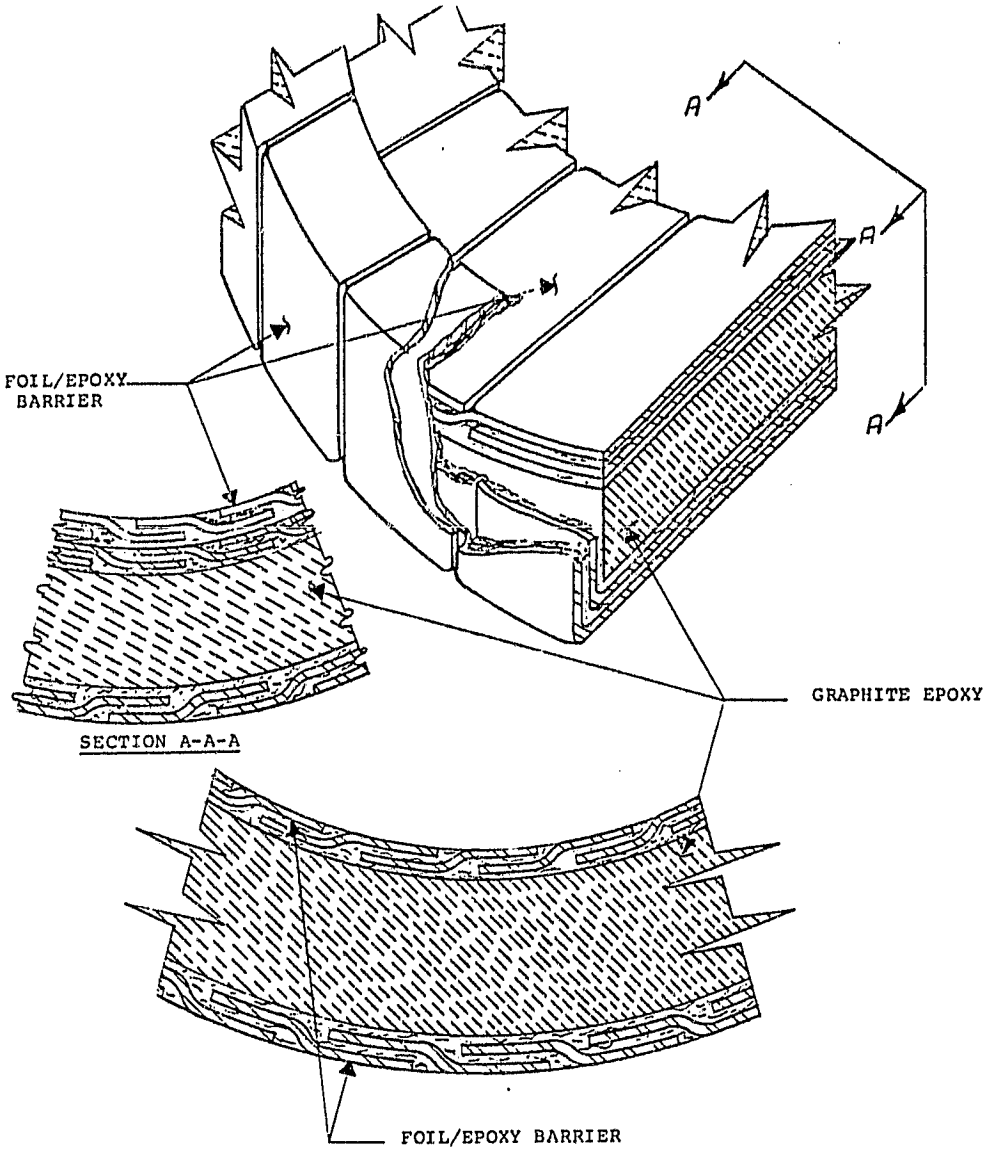

Figure 3-2a. Axial Single-Overlap Wrap Configuration

ORIGINAL PAGE IS
OF POOR QUALITY

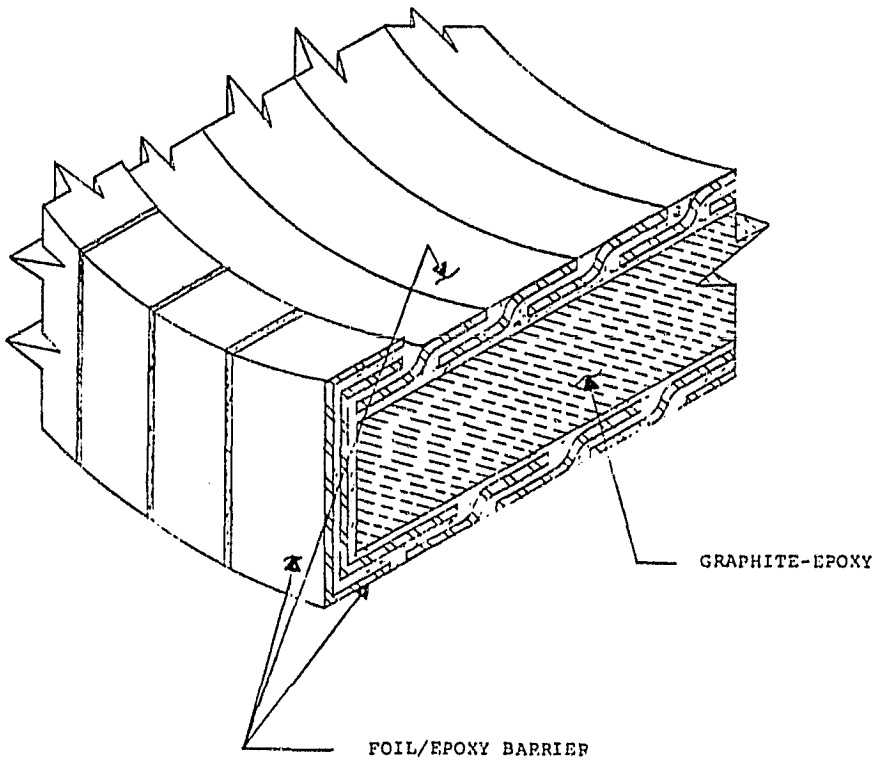

Figure 3-2b. Circumferential Single-Overlap Wrap Configuration

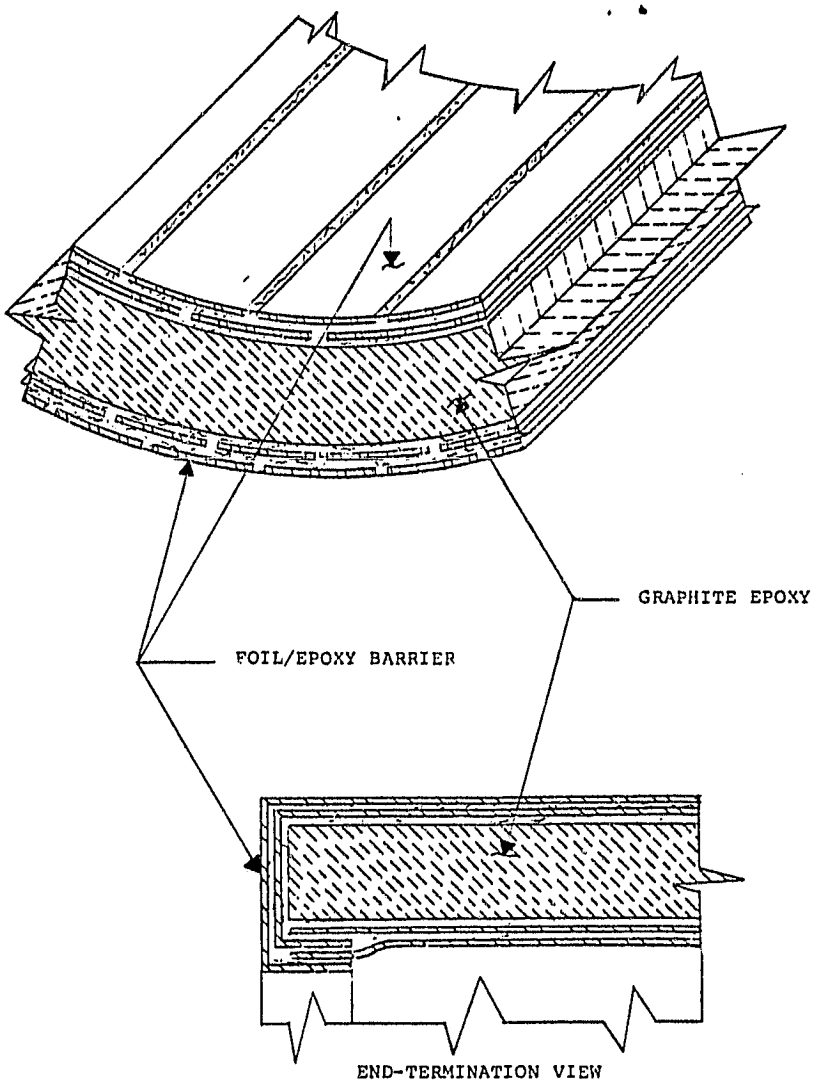

Figure 3-3. Two-Layer Foil Seal Configuration

3.3.2 Coefficient of Thermal Expansion (CTE)

10^{-6} in/in-F

3.3.2.1 For NIXT-1017 (with vapor barrier)

Longitudinal	+0.49
Circumferential	+1.80

3.4 THERMAL ENVIRONMENT

3.4.1 Operational

The cylinders specified herein shall be capable of meeting the CTE requirements of this specification over the temperature range from +60°F to +90°F following exposure to the non-operational environment.

3.4.2 Non-Operational

The non-operational temperature range shall be temperatures from 0°F to + 125°F.

3.5 Marking and Identification

Each component shall be marked with two sets of removable tags, one showing part number, a supplier assigned serial number, and the other showing orientation marks as shown on the drawings.

4.0 QUALITY ASSURANCE PROVISIONS

4.1 Process Control

In addition to the suppliers normal process control documentation, the following requirements shall be incorporated into the manufacturing sequence.

4.1.1 Storage Prior to Vapor Barrier Application

The tube must be bagged with desiccant after removal from its fabrication tooling.

4.1.2 Vacuum Bake-Out Prior to Vapor Barrier Application

The part shall be baked-out using both elevated temperature and vacuum with dry nitrogen backfill. The following is presented as guideline values recognizing that these parameters are dependent on the materials selected:

Temperature.....250°F
Temperature Adjustment Rate.....2 to 5°/Min.
Vacuum.....5 in. Hg (Abs. Pres.)
Time.....24 Hrs

The part shall be returned immediately to desiccated bag following this vacuum bake-out until the sealing process is initiated.

4.1.3 Storage During Vapor Barrier Application

If coating application time exceeds 8 hours for the secondary support tube, it shall be coated and stored using the following cycle until completion.

Coating Application.....8 hours
Vacuum Storage (5 in. Hg Abs. Pres.)...12 hours @ 100°F

4.1.4 Stabilization

The part shall be stabilized using a schedule similar to the one outlined below. This procedure is to stabilize the CTE. The secondary support tube should be processed after the application of the vapor barrier. The details of the final procedure will vary with t' exact materials selected. The sample procedure is outlined here.

-High Temperature.....175°F ±5°F
-Dwell.....TDB Hrs.
-Low Temperature.....-50°F ±5°F
-Dwell.....TBD Hrs.
-Number of Cycles.....10
-Rate of Change.....2 to 5°F/Min.

4.2 Surveillance

SAO reserves the right to assign designated representatives to the supplier's plant to perform surveillance functions on a non-interference basis in connection with all manufacturing processes.

4.3 Tests/Inspections

4.3.1 Responsibility for Tests/Inspections

SAO is responsible for tests of the material properties of the part. SAO will take the vendor's best effort provided it meets the physical dimension shown in "NIXT-1017". The vendor is responsible for mechanical inspection.

4.3.2 Test Samples

4.3.2.1 Component NIXT-1017

The support tube shall be manufactured with 5 inches minimum extra length at one end. This extra length shall be subjected to all processing steps of paragraph 4.1. Test coupons shall be made from this extra length. Coupons should be cut 5 inches in the axial direction by 1.5 inches on the arc for measurement of axial properties.

4.3.3 Mechanical Inspection

All components shall be inspected by vendor to demonstrate compliance with all dimensions specified on the applicable drawing.

5.0 PREPARATION FOR DELIVERY

5.1 Preservation and Packaging

The end item shall be packaged and protected to ensure that no degradation occurs due to shipping and handling shocks. All parts shall be packaged to maintain the relative humidity at 50% or less.

Residual test samples shall be packaged in a similar manner, labelled to identify the associated component, and shipped with the end items.

5.2 Packing

A shipping container, conforming to the requirements of MIL-P-116D, Method 1A, shall be utilized to protect the end item such that the transportation environment shall not cause excessive loads to the end items. Exterior containers shall conform to Uniform Freight Classification Rules for rail shipment or National Motor Freight Classification Rules for truck shipment, as applicable.

5.3 Marking

The shipment container shall be marked with the supplier's name and part designation for items contained herein.

Addendum
Courtaulds HMS
Material Properties

E_{11}	=	28.0	Mpsi
E_{22}	=	1.2	"
G_{12}	=	0.4	"
ν_{12}	=	0.32	"
CTE_{11}	=	-0.22	PPM/°F
CTE_{22}	=	+18.5	"

Ultimate	tensile	strength	0°	210 ksi
"	compressive	"	0°	130 ksi
"	tensile	"	90°	8 ksi
"	compressive	"	90°	30 ksi
"	inplane shear	"		13 ksi

d. Heat Treatment for NIXT Invar Tubes

TO: George Nystrom
Leon Golub
Lester Cohen
Dick Goddard

ORIGINAL PAGE IS
OF POOR QUALITY

FROM: Peter Cheimets

DATE: February 14,1984

SUBJECT: Heat Treatment of NIXT Invar Rings

The telescope base (NIXT-1000) is now in the process of being machined. In this memo I shall outline the heat treatment that will be done to this and other rings to stabilize their CTE and overall dimensions.

Suggested manufacturing sequence:

1. Rough figure using P-CE-3000, bring the part to within .125" on the final dimensions. Drill all holes .032" undersize.

2. Anneal per P-CE-1001 and inspect for signs of warpage. If there is considerable distortion, especially out of the plane of the ring, either re-anneal with a weight on the ring or take other actions that seem appropriate to the removal of the distortion. This step is skipped for rings other than the telescope base.

3. Quench the part per P-CE-1001.

4. Final machine the part to all the dimensions.

5. Heat treat the part to 600 F and 200 F to stabilize CTE, also as described in P-CE-1001.

The metal that the base is being manufactured from was cold-rolled to get it to the right outside dimension. This may have introduced internal stresses into the part. The rough machining process may add to the problem. For these reasons I suggest the annealing step which, in general, would not be necessary. The alternative and the method usually followed is to use the heating cycle in the quench step to relieve the stresses. This will not however permit us to take corrective action prior to quenching if the base were to deflect.

With the .125" excess, metal can be removed if there is a small deflection in the part or a large crust left by the quench. I suggest at least 1/8" be left on the other large parts that are to be quenched.

This procedure, editted as we become more experienced, will be followed for the other base flanges and secondary mirror support parts as well.

Please respond with your comments no later than Friday February 17th, if I don't hear from you I'll assume this procedure is fine with you.

CODE IDENT NO. 50944	SMITHSONIAN ASTROPHYSICAL OBSERVATORY CAMBRIDGE, MA.	CONTROL NO. P-CE-1001	
		DATE AUG, 1983	
		REV. LTR. A	PAGE 1 OF 5

ORIGINAL PAGE IS
OF POOR QUALITY

CENTRAL ENGINEERING
PROCEDURE
FOR
THE HEAT TREATMENT
OF
SUPER INVAR & LR-35 INVAR

REV.	ECO NO.	DATE	TITLE	APPROVAL SIGNATURE	DATE
A	RELEASED	AUG, 1983	ENGINEER	R. Goddard	8/12/83
			CHIEF ENG'R	[illegible]	8/12/83
			MGR. C.E.	[illegible]	8/12/83

TABLE OF CONTENTS

PARAGRAPH	TITLE	PAGE
1.0	SCOPE	2
2.0	REFERENCE DOCUMENTS	2
3.0	EQUIPMENT REQUIRED	2
4.0	MATERIALS	3
5.0	HEAT TREATMENT PROCEDURES	3
5.1	Initial Shaping	3
5.2	Anneal Heat Treatment	3
5.2.1	Objective	3
5.2.2	Anneal Heat Treatment	3
5.3	Dimensional Stability Heat Treatment	3
5.3.1	Objective	3
5.3.2	Solution Heat Treatment	4
5.3.3	Interim Machining	4
5.3.4	Intermediate Temperature Stress Relief Heat Treatment	4
5.3.5	Low Temperature Stabilization Heat Treatment	5
5.4	Finish Machining and Coating Operations	5

1.0 SCOPE

This procedure defines the Heat Treatment (H-T) processes to be utilized in providing enhanced material stability along with reducing "machining-induced" internal stresses in both Guterls "Super Invar" and Universal Cyclops UNISPAN LR-35 INVAR.

2.0 REFERENCE DOCUMENTS

Specification No. LODTM-030-521C-A

Heat Treatment of Super Invar Components
Lawrence Livermore, National Laboratories, Livermore, California 94550.

Super Invar Data Sheet

Guterl Special Steel Corp.
695 Ohio Street
Lockport, New York 14094

UNISPAN LR-35 Data Sheet

Universal Cyclops Specialty Sheet Division
Cyclops Corp., Pittsburg, Pennsylvania

Dimensional Behavior of Invar

by: Lement, Averbach and Cohen
Trans. American Society for Metals
No. 43, 1951

SAO Procedure No. P-CE-3000

The machining of Super Invar and LR-35 Invar

3.0 EQUIPMENT REQUIRED

- Inert Atmosphere or vacuum furnace
- Automated high temperature oven with adjoining quench tank and horizontal, porous (open webbing) non-distorting part support platen.
- High temperature controlled air circulating oven.
- Thermocouple read-outs for mointoring part temperature.

SMITHSONIAN ASTROPHYSICAL OBSERVATORY	REV LTR A	CONTROL NO. P-CE-1001
	CODE IDENT NO. 50944	DATE AUG., 1983
	PROCEDURE	PAGE 3

4.0 MATERIALS

- Condursil 0900

5.0 HEAT TREATMENT PROCEDURES

These procedures describes the sequence of steps required for proper heat treatment of the Invar relative to part fabrication activities.

5.1 Initial Shaping

Saw-cut* the approximate shape of the final part allowing sufficient (extra) material to form a buffer-zone (e.g., 0.25 to 1.0 inches per surface). Plasma-arc or other high-heat processes must be avoided.

5.2 Process Anneal Treatment

5.2.1 Objective

Remove the effects of cold-work operations imparted by forming, rolling and/or machining operations.

5.2.2 Anneal Heat Treatment

Process anneal heat treatment is performed by heating the part to 1650 ± 25°F and stabilizing for 30 ± 5 minutes in a dry Argon, dry** Nitrogen or a vacuum $\leq 10^{-5}$MM Hg. Cooling may be accomplished by either "still atmosphere or radiational cooling" until 600°F is reached where upon the part may be removed and "still air cooled to room temperature.

5.3 Dimensional Stability Heat Treatment

5.3.1 Objective

- Solution H-T: Lowering the coefficient of thermal expansion (C.T.E.) by placing residual carbon into solution within the lattice structure and capturing it with quenching.

-*Option: Carbide Blade; Also Lathe/Parting or milling acceptable
**Dry refers to an atmosphere with a dew point of -50°F or lower.

ORIGINAL PAGE IS OF POOR QUALITY

- Intermediate Temp. H-T: Relieving quenching and machining stresses without graphite precipitation.

- Low Temp. H-T: Redistribution of carbon (expansion) and further relief (contraction) of quenching and machining stresses.

5.3.2 Solution Heat Treatment

- Coat all surfaces with a non-carburizing coating.

- Furnace gas sulphur content not to exceed 0.5%.

- Heat part to 1525°F ± 10°F for 1 hour/inch of thickness.

- Part shall lie horizontally and unconstrained on non-distorting support surface during heat/quench process.

- Quench the part to room temperature using a large circulating water immersion tank. Quench time from furnace exit to temperature (85°F maximum) shall not exceed 10 seconds.

  After the solution heat-treatment the part temperature must not exceed 610° F.

5.3.3 Interim Machining

Machine part to within .010 in. per all surfaces.

5.3.4 Intermediate Temperature Stress Relief Heat Treatment

- Part shall lie horizontally and unconstrained on a non-distorting support surface.

- Heat part to 600°F ± 10°F and stabilize for 1 hour ± 0.1 hours in a dry **Argon, dry **nitrogen or vacuum ≤ 10^{-5} MM Hg.

- After above heat-treatment part temperature must not exceed 210°F.

5.3.5 Low Temperature Stabilization Heat Treatment

- Part shall lie horizontally and unconstrained on a non-distorting support surface.
- Heat part in an air circulating oven to 200°F ± 10°F for 48 hours ± 0.5 hours.
- Still air cool to room temperature (85°F maximum).
- After above heat treatment, part temperature must not exceed 200°F.

5.4 Finish Machining and Coating Operations

- Following completion of the above heat treatments, the fabricated part is ready for final machining and coating.

CODE IDENT NO. 50944	SMITHSONIAN ASTROPHYSICAL OBSERVATORY CAMBRIDGE, MA.	CONTROL NO. P-CE-3000	
		DATE AUG., 1983	
		REV. LTR. A	PAGE 1 OF 4

ORIGINAL PAGE IS
OF POOR QUALITY

OCT 26 1983

CENTRAL ENGINEERING PROCEDURE FOR THE MACHINING OF SUPER INVAR AND LR-35 INVAR

REV.	ECO NO.	DATE	TITLE	APPROVAL SIGNATURE	DATE
A	RELEASED	AUG., 1983	ENGINEER	R. Goddard (c pus)	8/12/83
			CHIEF ENG'R	[illegible]	8/9/83
			MGR C.E.	R. Bolles	8/12/83

SMITHSONIAN ASTROPHYSICAL OBSERVATORY	REV LTR A	CONTROL NO. P-CE-3000
	CODE IDENT NO. 50944	DATE AUG., 1983
	PROCEDURE	PAGE i

TABLE OF CONTENTS

SECTION		PAGE
1.0	SCOPE	2
1.1	Reference Documents	2
2.0	GENERAL	2
2.1	Rough Stock Shaping	2
2.2	Symmetrical Stock Removal	2
3.0	PART FABRICATION/MACHINING	2
3.1	Initial Stock Shaping	2
3.1.1	Saw Cutting	2
3.1.2	Coarse Single Point Turning (Descaling)	3
3.2	Machining Post 1525°F Quench	3
3.2.1	Single Point Turning	3
3.2.2	Milling Operations	3
3.2.3	Drilling Operations	3
3.3	Final Machining (Post 600°F/.200°F H-T)	3
3.3.1	Single Point Turning	4
3.3.2	Milling Operations	4
3.3.3	Drilling Operations	4

ORIGINAL PAGE IS
OF POOR QUALITY

1.0 SCOPE

This procedure defines a specific approach to be taken in various rough and finish machining operations regarding Guterl's Super Invar and Universal Cyclops LR-35 Invar.

1.1 Reference Documents

SAO Procedure

The Heat Treatment of Super Invar and LR-35 Invar — P-CE-1001

LLNL Specification

Heat Treatment of Super Invar Components
Lawrence Livermore National Laboratories,
Livermore, California — LODTM-030-521C-A

2.0 GENERAL

Refer to SAO Procedure P-CE-1001 for further details concerning the requirements for the heat treatment of Super Invar and LR-35.

2.1 Rough Stock Shaping

High heat processes must be avoided, i.e., plasma-arc cutting. Steel, carbide or diamond saw or carbide-lathe tooling or milling operations may be used in extracting the part's approximate shape.

2.2 Symmetrical Stock Removal

Where rough stock shapes and part geometries allow, equal amounts of material shall be alternately removed from both the "top" and "bottom" surfaces during rough and finish machining operations.

3.0 PART FABRICATION/MACHINING

3.1 Initial Stock Shaping

Accomplished prior to all heat treatments.

3.1.1 Saw Cutting

- Conventional Steel Blade.....50 SF/M
- Carbide or Diamond..... 100 to 150 SF/M
- Coolant.....*SEE NOTE

3.1.2 Coarse Single Point Turning (Descaling)

- Carbide Tooling with 8° Back Rake
- Depth of Cut..... .01 to .03"/Pass
- Speed.....400 SF/M
- Feed..... .005"/Rev.
- Coolant.....*SEE NOTE

3.2 Machining (Post 1525°F Quench)

This process shall remove the quenching scale and reduce the parts dimensions until the specified (machining drawing) 600°F buffer-zone is reached. The surface temperature of the part shall be measured occasionally during machining to insure that its temperature does not exceed 200°F.

3.2.1 Single Point Turning

- Carbide Tooling with 8° Back Rake
- Depth of Cut..... .002 to .005"/Pass
- Speed.....400 SF/M
- Feed..... .005"/Rev.
- Coolant.....*SEE NOTE

3.2.2 Milling Operations

- Stock Removal: 0.001"/Cutter Tooth

3.2.3 Drilling Operations

Tip Angle.....135°
Hole Dia. ≤ .125"; 45 SF/M & .002" Feed/Rev.
Hole Dia. ≤ .50"; 45 to 48 SF/M & .003" Feed/Rev.

*NOTE

Water soluble oil/water mixture or 50% Moly-D-Tap fluid + 50% Cool Tool or equivalent.

3.3 Final Machining (Post 600°F/.200°F H-T)

The surface temperature of the part shall be measured occasionally during machining to insure that its temperature does not exceed 200°F.

3.3.1 Single Point Turning

Carbide Tooling with 8° Back Rake
Depth of Cut..... .001 to .002"/Pass
Speed.....80 SF/M
Feed..... .005"/Rev.
Coolant.....*SEE NOTE

3.3.2 Milling Operations

Stock Removal: .001" Total/Pass

3.3.3 Drilling Operations

Refer Drilling Operations Paragraph 3.2.3

ORIGINAL PAGE IS
OF POOR QUALITY

*NOTE
Water soluble oil/water mixture or 50% Moly-D-Tap fluid + 50% Cool Tool or equivalent.

3. Hasselblad Camera for Rocket Flight

VICTOR HASSELBLAD AKTIEBOLAG

ÖSTRA HAMNGATAN 3 · BOX 220 · S-401 23 GÖTEBORG · SWEDEN · TELEFON 031/171060 · TELEGRAM HASSELBLADS · TELEX 2279

Smithsonian Institution
60 Garden Street
Cambridge, Mass. 02183
U S A

ATTENTION: Mr. Leon Golub

Göteborg 1983-12-15

Subject: Hasselblad Camera for high altitude X-ray experiment.

Ref.: Your letters of January 17 and July 27, 1983.
Mr. Ralph Green's visit.
Telephone conversations.

Dear Mr. Golub,

We regret the rather lengthy processing of this subject which is due to a certain reorganization within the department.

Enclosed is our quotation for a suggested batch of Hasselblad equipment selected for the mission reviewed in our previous communications. The quotation also includes a brief specification on the equipment and a suggested test specification for the environmental and load tests and our drawing No. 606 581 indicating the fastening interface configuration and the overall unit dimensions.

The areas available for additional load supports are marked in the drawing. Please remember that the camera housing should not be permanently stressed. The marked areas are intended for auxiliary support during the maximum g-load periods only.

The four threaded positioning and securing pins in the bottom plate could be manufactured to any specified length.

Referring to our latest telephone communication, the body reinforcement design presumes that power is supplied externally since the battery compartments are partially occupied by reinforcement elements. Besides, the standard batteries would not be suitable for low pressure operations due to the increasing internal pressure during discharge.

ORIGINAL PAGE IS
OF POOR QUALITY

VICTOR HASSELBLAD AKTIEBOLAG
GÖTEBORG · SWEDEN

All modifications have been listed in the "Camera Specification" attached to the quotation, except the flexible connection between camera body and lens. To be able to suggest a suitable solution we need more information on the lens interface configuration and the distance between lens and camera body.

We regret the long delivery period but presently the special applications design and manufacture departments are both heavily loaded with work.

If you have any comments to the specification or quotation, please give us a call!

Yours sincerely,
VICTOR HASSELBLAD AKTIEBOLAG

Jan A. Lundberg
Special Applications Department

JAL/BW

Encl.: Quotation No. Q-60332

ORIGINAL PAGE IS
OF POOR QUALITY

VICTOR HASSELBLAD AKTIEBOLAG

ÖSTRA HAMNGATAN 3 · BOX 220 · S-40123 GÖTEBORG · SWEDEN · TELEFON 031/171960 · TELEGRAM HASSELBLADS · TELEX 2279

Smithsonian Institution
Astrophysical Observatory
60 Garden Street
Cambridge, Mass. 02130
U S A

ATTENTION: Mr. Leon Golub

Göteborg 1983-12-15

QUOTATION No. Q-60332.

With reference to your letter of July 27 1983 and subsequent discussions with mr. Ralph W. Green and mr. Jan A. Lundberg of our company, we have the pleasure to offer the equipment listed below.

	Code No.	Designation	Qty	Price US$
1.	10219	Hasselblad 500EL/M Body	1	
2.	30228	Hasselblad Magazine 70/100-200	1	
3.	46229	Battery Compartment Door	1	
4.	46027	Remote Control Cable LK 500	1	
5.		Power Supply Cable	1	
			Total US$	1.481.-
6.		Design and manufacturing of modification of line items 1 through 5 according to enclosed specification and drawing No. 606581. Delivery of hardware and applicable test reports 16 weeks after order but not earlier than April 30, 1984.	US$	2.416.-
7.		Shock and vibration test.	US$	1.000.-
			Total US$	4.897.-

8. The price is FOB Gothenburg excl. taxes.
Payment conditions: On receipt of invoice.

VICTOR HASSELBLAD AKTIEBOLAG
GÖTEBORG · SWEDEN

If the equipment ordered according to this quotation does not fulfil the environmental test requirements specified on page 2 of the enclosed specification No. SP-60332 the cost to be defrayed by you shall not exceed US$ 2.481.- which includes the costs for the unmodified hardware and the environmental test procedure.

This quotation is valid for ninety (90) days.

Yours sincerely,
VICTOR HASSELBLAD AKTIEBOLAG

Jan A. Lundberg
Special Applications Department

Enclosures: Specification No. SP-60332
Dwg. No. 606581

JAL/BW

ORIGINAL PAGE IS
OF POOR QUALITY

ORIGINAL PAGE IS
OF POOR QUALITY

VICTOR HASSELBLAD AKTIEBOLAG
GOTEBORG · SWEDEN

No. SP-60332

SPECIFICATION, Hasselblad High Altitude Equipment.

I. Hasselblad Modified 500EL/M Camera Body.

A. Items removed:

1. Viewfinder mirror.
2. Viewfinder groundglass screen.
3. Mode of operation selector.
4. Accessory rail.
5. Carrying strap buttons.
6. Standard battery compartment hatch.
7. LOT (Lock/time release) lever.
8. Quick coupling slide.
9. Rubber footpads.
10. External leatherette coating sheets.
11. Reduction of lubricants to minimize outgassing.

B. Items installed:

1. Viewfinder opening cover with magazine lock hatch.
2. Light trap plate.
3. Internal body joint reinforcement.
4. Battery compartment hatch with external power supply socket and modified lock.
5. Power supply connector retaining means.
6. Remote control connector retaining means.
7. Reinforcements for three additional ¼" retaining screws
8. Reinforced footplate with four positioning and retaining pins.
9. Aluminum sheet covers (where applicable).

II. Hasselblad Modified Film Magazine 70/100-200.

A. Items removed:

1. External leatherette coating sheets.
2. Film indicator flap holder.
3. Reduction of lubricants to minimize outgassing.

B. Items installed:

1. Aluminum sheet covers (where applicable).

VICTOR HASSELBLAD AKTIEBOLAG
GOTEBORG · SWEDEN

ORIGINAL PAGE IS
OF POOR QUALITY

III. Operational Specification:

1.	Mode of operation:	Single frame.
2.	Exposure interval:	Min. 0,8 sec at 6 VDC.
3.	Exposure pulse duration:	Min. 50 ms.
4.	Rewind cycle duration:	Min. 0,6 sec. at 6VDC.
5.	Power supply:	6 + 1,5/-1 VDC.
6.	Operational current:	1,5 A average.
7.	Operational peak current:	3 A, duration 10 ms.

IV. Shock and Vibration Test.

A. Vibration.

1. Sinusoidal, three axis

Sweep rate	2 oct/min.	
Acceleration	+/-28,12 cm/s	5 - 35 Hz
	+/-11,3 g	35 - 800 Hz
	+/-15,0 g	800 - 2000 Hz
	+/-30 g	2000 - 3000 Hz

2. Random, three axis

Duration	20 sec/axis	
Acceleration	22,5 g rms	Overall
	0,256 g^2/Hz	20 - 2000 Hz

B. Shock/transient.

½ wave sinusoidal
Twice, thrust axis only

Acceleration	60 g decaying to 30 g in 4 cycles	96 Hz

No operation of the camera mechanism is required during the test procedure.

The camera shall remain operational after the test procedure.

Göteborg 1983-12-15
VICTOR HASSELBLAD AKTIEBOLAG

Jan A. Lundberg
Special Applications Dept.

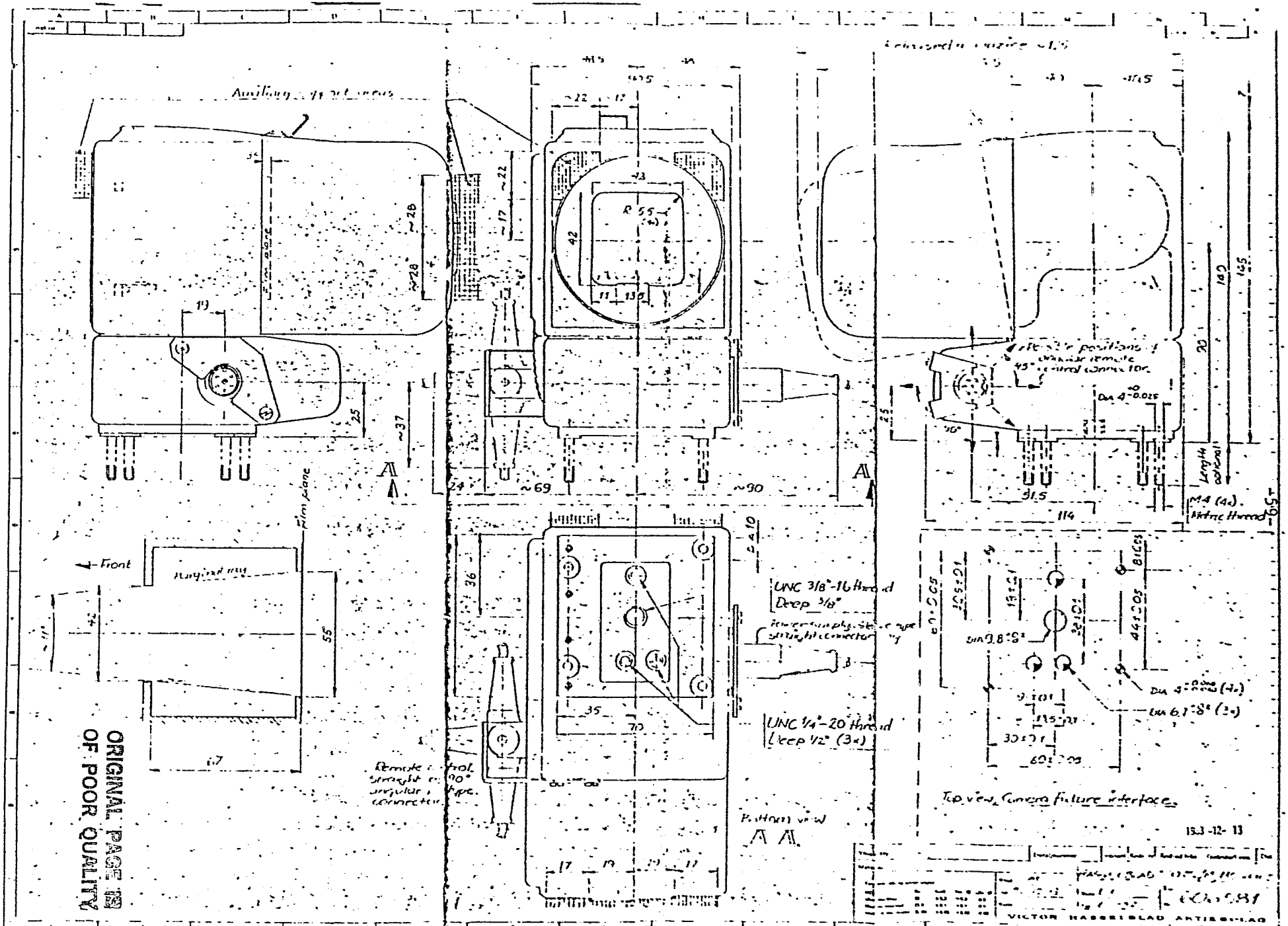

ORIGINAL PAGE IS
OF POOR QUALITY

APPENDIX

LA-UR-84-720

ORIGINAL PAGE IS
OF POOR QUALITY

Los Alamos National Laboratory is operated by the University of California for the United States Department of Energy under contract W-7405-ENG-36

TITLE: PERFORMANCE OF TRANSITION METAL--CARBON MULTILAYER MIRRORS FROM 80 to 350 eV

AUTHOR(S): D. R. Kania
R. J. Bartlett
W. J. Trela
E. Spiller
L. Golub

SUBMITTED TO: Second Topical Mtg. on Laser Techniques in the Extreme Ultraviolet
Hilton Harvest House Hotel
Boulder, Colorado

March 5-7, 1984

By acceptance of this article, the publisher recognizes that the U.S. Government retains a nonexclusive, royalty-free license to publish or reproduce the published form of this contribution, or to allow others to do so, for U.S. Government purposes.

The Los Alamos National Laboratory requests that the publisher identify this article as work performed under the auspices of the U.S. Department of Energy.

Los Alamos National Laboratory
Los Alamos, New Mexico 87545

FORM NO 836 R4
ST NO 2629 5/81

ORIGINAL PAGE IS
OF POOR QUALITY

PERFORMANCE OF TRANSITION METAL--CARBON MULTILAYER MIRRORS FROM 50 to 350 eV

D. R. Kania, R. J. Bartlett, W. J. Trela
Los Alamos National Laboratory, Los Alamos, NM 87545

E. Spiller
IBM Corporation, Yorktown Heights, NY 10598

L. Golub
Harvard Smithsonian Center for Astrophysics, Cambridge, MA

ABSTRACT

We report measurements and theoretical calculations of the reflectivity and resolving power of multilayer mirrors made of alternate layers of a transition metal (Co, Fe, V, and Cr) and carbon (2d ≈ 140 A) from 80 to 350 eV.

INTRODUCTION

Recent developments in thin film technology have made it possible to fabricate coatings, multilayer mirrors, that enhance surface reflectivity in the vacuum ultraviolet and soft x-ray region.[1,2] Multilayer mirrors form an artificial crystal lattice consisting of alternate layers of high and low atomic number (Z) materials. The high Z material acts as a scattering plane while the low Z material acts as a spacer between the high Z planes. Like a natural crystal these coatings obey Bragg's law, $\lambda/2d = \sin\theta$, i.e., the ratio of the incident wavelength, λ, to the 2d spacing of the multilayer equals the sine of the incident angle, θ, measured from the mirror surface. We have measured the reflectivities of four transition metal (Co, Fe, Cr, and V)--carbon multilayer mirrors between 80 and 350 eV. The 2d spacing of the mirrors was ≈ 140 A. The angular range examined was 15° to 80°.

Calculations of the multilayer mirrors performance may be made using the equations of classical electrodynamics[3] and compilations of the optical constants of the relevant materials.[4] Peak reflectivity calculations were performed and compared to the measured peak reflectivities.

Extrapolation of the calculated reflectivity was required because of a lack of optical constant data in the region below 100 eV. Inclusion of the effects of interfacial roughness which reduces the multilayer mirror reflectivity yields excellent agreement between the calculated and measured values. It is important to note that other factors, such as uncertainties in the optical constants and diffuse boundaries may also contribute to the reduction in the reflectivity.

ORIGINAL PAGE IS
OF POOR QUALITY

EXPERIMENT

The multilayer mirrors used in the present investigation were fabricated by electron beam evaporation.[1] An in situ soft x-ray (γ = 31.6 or 67.6 A) monitor was used to maximize the reflectivity of the multilayer during fabrication. The structure which results is not a regular lattice with constant layer thickness throughout, rather the thickness ratio of the low Z to high Z material increases towards the surface of the multilayer mirror. Table I includes the average characteristics of the multilayers studied in this experiment.

Table I Multilayer Characteristics

	V-C	Cr-C	Co-C	Fe-C
Average 2d spacing (A)	134	134	143	143
Number of layer pairs	15	14	20	20
Average thickness ratio high Z/low Z	0.7	0.7	0.4	0.4

The reflectivity measurements were performed at the Stanford Synchrotron Radiation Laboratory. The photon beam from the synchrotron was monochromatized by a "grasshopper type" (Rowland circle grazing incidence) monochromator with a 1200 l/mm grating. The samples could be rotated (θ) independent of the detector (2θ). A single channetron electron multiplier with a micromachined aluminum photocathode was used to measure the reflected, I_R, and incident, I_0, S-polarized photon beams. Data was collected by fixing the sample and detector angles and scanning the photon energy. The errors in the reflectivity $R = I_R/I_0$ were approximately 20%.

DATA AND ANALYSIS

Figure 1 shows the measured peak reflectivity vs. energy for the multilayer mirrors listed in Table I. This may be compared to calculations of the peak reflectivity based on the method of P. Lee[5] and the optical constant compilations of Henke, et. al.[4] Unfortunately, the optical constant tabulations are incomplete below 100 eV, therefore the calculated reflectivities between 80 and 100 eV are linear extrapolations of the reflectivity above 100 eV. It is reasonable to expect this extrapolation to be accurate for all the materials except iron which has a 3s electron binding energy of 92 eV. Changes in the optical constants associated with this resonance may make the extrapolation less accurate. Figure 2 shows the reflectivity ratio (calculated/measured), R_R, vs. energy for all the samples listed in Table I.

ORIGINAL PAGE IS
OF POOR QUALITY

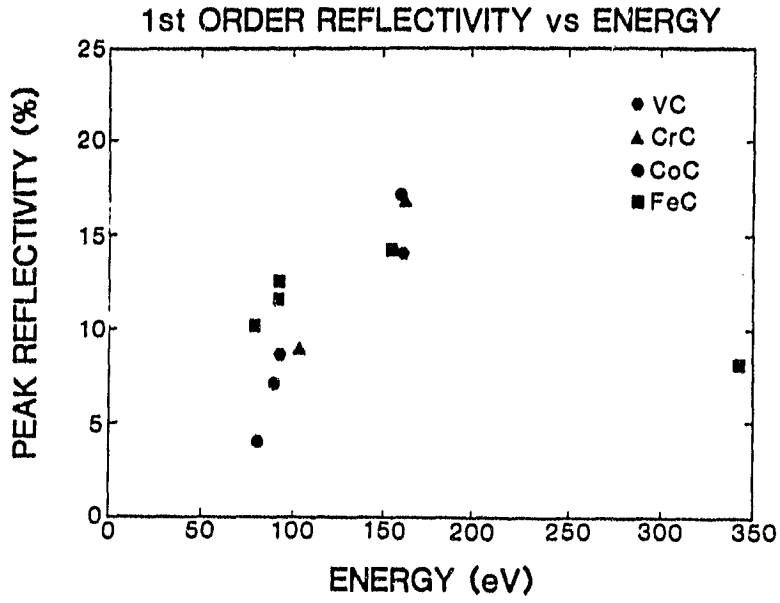

Fig. 1. Measured peak reflectivity vs. energy for several transition metal-carbon multilayer mirrors. The effective 2d spacing for the mirrors was approximately 140A. The angular range was 15° to 80°.

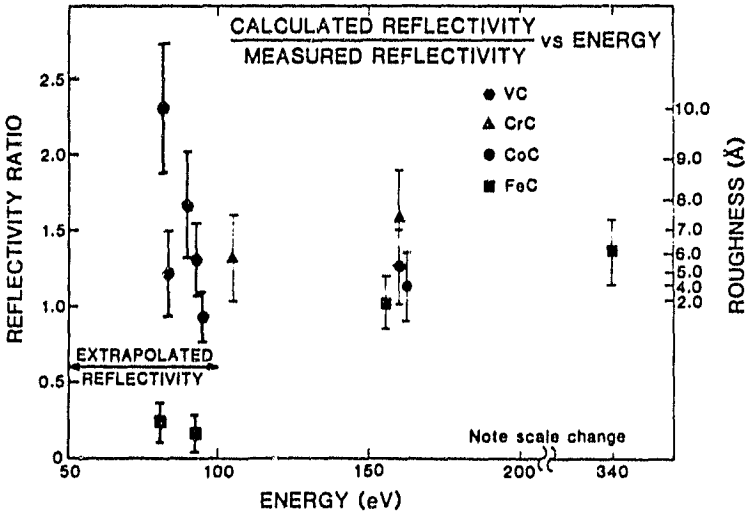

Fig. 2. The reflectivity ratio (calculated/measured) vs. energy for several transition metal-carbon multilayers. The calculated reflectivies are extrapolations below 100 eV. The roughness for a given reflectivity ratio is shown on the right hand scale.

ORIGINAL PAGE IS
OF POOR QUALITY

The error bars are representative of the experiment and do not contain the uncertainties in the optical constants or extrapolations.

We note that within experimental error nearly all of the multilayers perform below calculational levels, i.e., $R_R > 1.0$. The exceptions, the FeC data below 100 eV, are probably a result of the uncertainty introduced by the extrapolation of the reflectivity below 100 eV into a resonance region in iron. Many effects may cause this reduction: surface roughness, diffuse boundaries, and uncertainty in the multilayer parameters (optical constants, material density, and material distribution). We choose to assume that all of the discrepancy is due to surface and interfacial roughness. The reduction in reflectivity for a rough boundary between two media[6] coupled with the Bragg condition is

$$R_R = \exp\left[+ (2\pi\ \sigma/d)^2\right] \qquad (1)$$

where σ is the root mean square roughness.

Using the average reflectivity ratio for each sample (we have left out the Fe-C samples below 100 eV) we have calculated a σ for each sample using equation 1. The calculated roughness and sample standard deviations are summarized in Table II.

TABLE II

Multilayer Mirror	Calculated Roughness (A)	Sample Deviation (%)
FeC*	4	20
CoC	8	30
V-C	4	15
CrC	6	12

*Excluding data below 100 eV.

The right hand scale of Fig. 2 provides an indication of the roughness associated for a given reflectivity ratio.

A complete diffraction profile of a V-C sample is shown in Fig. 3. The structure observed is typical of all of the samples. The central peak has a resolving power, the peak energy divided by the full width at half maximum, of 20 which is consistent with the theoretical expectation that the resolving power is nearly equal to the number of layer pairs contributing to the reflectivity which is 15 in this case.[1] The structure in the wings of the main peak is attributed to the aperiodicity of the multilayer structure, i.e., the ratio of high Z to low Z material in the multilayer is a function of depth.

ORIGINAL PAGE IS
OF POOR QUALITY

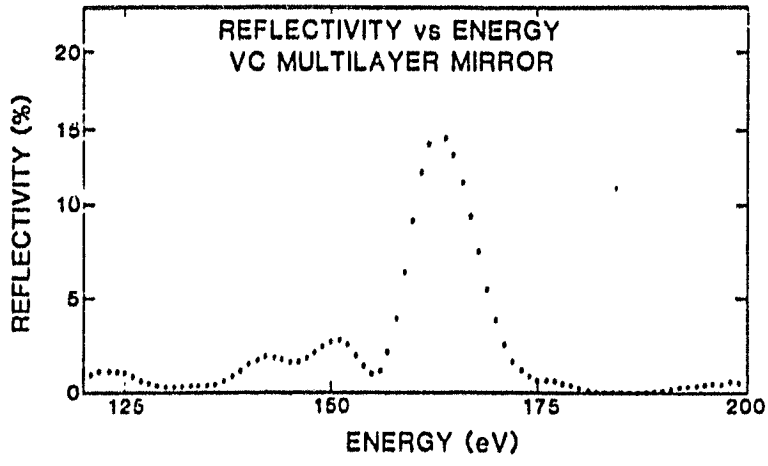

Fig. 3. The reflectivity in percent of a V-C multilayer mirror vs. photon energy.

CONCLUSION

We have demonstrated that multilayer mirrors can be used a efficient reflectors of soft x-rays for non-grazing incidence. The performance of these structures can be calculated with allowance for imperfections in the fabrication process and uncertainties in the optical constants.

REFERENCES

1. E. Spiller, "Evaporated Multilayer Dispersion Elements for Soft X-Rays," in Low Energy X-Ray Diagnostics, 1981, edited by D. T. Attwood and B. L. Henke, American Institute of Physics, New York, p. 124, 1981.

2. T. Barbee, "Sputtered Layered Synthetic Microstructures (LSM) Dispersion Elements," in Low Energy X-Ray Diagnostics, 1981, edited by D. T. Attwood and B. L. Henke, American Institute of Physics, New York, p. 131, 1981.

3. M. Born and E. Wolf, "Principles of Optics," Pergamon Press, New York, pp. 51-70, 1970.

4. B. L. Henke, P. Lee, T. J. Tanaka, R. L. Shimabukuro, B. K. Fujikawa, Atomic Data and Nuclear Data Tables, 27, (1982).

5. P. Lee, Opt. Commun., 43, 237 (1982).

6. H. E. Bennett and J. O. Porteus, J. Opt. Soc. Am., 51, 123 (1961).