NASA-TM-85941

NASA Technical Memorandum 85941

NASA-TM-85941 19840015597

Advanced Leading Edge Thermal-Structure Concept — Direct Bond Reusable Surface Insulation to a Composite Structure

S.R. Riccitiello, Hector Figueroa, C.F. Coe, and C.P. Kuo

LIBRARY COPY

FOR REFERENCE

MAY 15 1984

NOT TO BE TAKEN FROM THIS ROOM

LANGLEY RESEARCH CENTER
LIBRARY, NASA
HAMPTON, VIRGINIA

March 1984

NASA

National Aeronautics and
Space Administration

DISPLAY 41/2/1

84N23665*# ISSUE 14 PAGE 2113 CATEGORY 16 RPT#: NASA-TM-85941 A-9570 NAS 1.15:85941 84/03/00 39 PAGES UNCLASSIFIED DOCUMENT

UTTL: Advanced leading edge thermal-structure concept. Direct bond reusable surface insulation to a composite structure

AUTH: A/RICCITIELLO, S. R.; B/FIGUEROA, H.; C/COE, C. F.; D/KUO, C. P. PAA: B/(Aerospace Corp., Sunnyvale, Calif.); C/(Coe Engineering); D/(JPL)

CORP: National Aeronautics and Space Administration. Ames Research Center, Moffett Field, Calif. AVAIL.NTIS SAP: HC A03/MF A01

MAJS: /*BONDING/*COMPOSITE STRUCTURES/*LEADING EDGES/*SPACE TRANSPORTATION SYSTEM/*THERMAL INSULATION/*TILES

MINS: / ABLATIVE MATERIALS/ AERODYNAMIC COEFFICIENTS/ FIBER COMPOSITES/ HIGH TEMPERATURE ENVIRONMENTS/ REFRACTORY MATERIALS/ WEIGHT REDUCTION

ABA: A.R.H.

ABS: An advanced leading-edge concept was analyzed using the space shuttle

NASA Technical Memorandum 85941

Advanced Leading Edge Thermal-Structure Concept — Direct Bond Reusable Surface Insulation to a Composite Structure

S. R. Riccitiello, Ames Research Center, Moffett Field, California
Hector Figueroa, Aerospace Corporation, Sunnyvale, California
C. F. Coe, Coe Engineering, Los Altos, California
C. P. Kuo, Jet Propulsion Laboratory, Pasadena, California

NASA
National Aeronautics and
Space Administration

Ames Research Center
Moffett Field, California 94035

N84-23665#

ADVANCED LEADING EDGE THERMAL-STRUCTURAL CONCEPT — DIRECT BOND REUSABLE SURFACE INSULATION TO A COMPOSITE STRUCTURE

S. R. Riccitiello, Hector Figueroa,* C. Coe,† and C. P. Kuo‡

Ames Research Center

SUMMARY

An analysis for an advanced leading-edge concept was performed using the Space Shuttle leading-edge system as a reference model. The comparison indicates that a direct-bond system utilizing high temperature (2700°F) fibrous refractory composite insulation (FRCI) tile bonded to a high temperature (PI/graphite) composite structure will result in a weight savings of up to 800 lb. A major concern expressed about a leading-edge tile system is that tile damage or loss during ascent would result in adverse entry aerodynamics. This concern, as well as others, was addressed in the study and it was found from experiment that missing tiles (as many as 22) on the leading edge would not significantly affect the basic force-and-moment aerodynamic coefficients. Additionally, this concept affords a degree of redundancy to a thermal protection system in that the base structure (being a composite material) will ablate and not melt or burn through when subjected to entry heating in the event tiles are actually lost or damaged during ascent.

INTRODUCTION

Earth-entry designs for the Space Shuttle Orbiter Vehicle suggest surface temperatures to 2700°F in the nose cap and wing leading-edge areas. Unlike previous manned space vehicles, the Orbiter is designed to perform a multirole mission with a minimum of refurbishment between missions. Early thermal protection studies showed that a reusable surface insulation (RSI) would meet the requirements and provide minimum life-cycle costs for a majority of the vehicle surfaces when the temperatures did not exceed 2300°F. However, for the nosecaps and wing leading edge, the state-of-the-art RSI materials could not meet the requirements. A reinforced carbon-carbon material (RCC) was thus selected to meet the thermal and environmental demands of these areas. The selection of a hot structure for leading edges based on a carbon-carbon material (with various nonoxidizing substances to retard oxidation during entry) requires the use of a high-temperature insulation to limit the temperature of the base aluminum structure of the Orbiter to 350°F. In addition, the RCC system required elaborate attachments to withstand the temperature-load environment as well as insulation to protect them. A detailed description of the process to prepare the RCC material is given in references 1-3, while figure 1 shows a sketch of leading edge components.

---

*Aerospace Corporation, Sunnyvale, California.
†Coe Engineering, Los Altos, California.
‡Jet Propulsion Laboratory, Pasadena, California.

The recent development of fibrous refractory composite insulation (refs. 4, 5) (FRCI) (table 1) with temperature capabilities approaching 2800°F now allows for a rethinking about those areas which used a hot structure RCC to survive the environment. A preliminary study was initiated to determine the potential weight savings that would be realized for an advanced FRCI RSI leading edge thermal protection system over the state-of-the-art RCC hot structure. An obvious advantage in this type of thermal protection system for leading edges (especially the wing leading edge), in addition to weight savings, would be simplified design which would translate ultimately into reduced life-cycle costs.

DESIGN AND ANALYSIS

In any proposed design for a wing leading edge comprised of reusable surface insulation, the method of attachment of RSI to the structure and the type of structure used has to be a first-order consideration. The state-of-the-art technique to attach the RSI material to the aluminum structure of the Space Shuttle utilizes a strain isolation pad (SIP) to reduce the stresses between the rigid RSI tiles and the aluminum structure. A system utilizing a SIP cannot be considered for a wing leading edge for many reasons, not the least of which are the long term fatigue property of the low-density felt material and the difficulty in installation. The recent development of the high strength FRCI that meets the projected temperature of 2700°F for a leading edge, and recent applications of high-temperature composite structures with 500°F temperature capability make it now possible to consider the direct bonding of the tiles (with a high temperature adhesive) to a composite structure. The direct-bond technique has been successfully demonstrated by Rockwell International as part of a program to identify weight savers for the Space Shuttle by the fabrication and subsequent evaluation (without failure) of a polyimide/graphite composite-FRCI tile body flap (Rockwell International, Report on Ice Impact, STS81-0558-2, 1981).

A direct-bond TPS design utilizing an RSI material raises many questions, particularly when one considers impact damage. Impact damage due to debris during launch has been a major concern for the Space Shuttle program. Impact damage resulting from debris (STS-1 flight) is shown in figure 2 (ref. 7). As indicated, the most susceptible areas are on the Orbiter body; however, impact damage to a leading edge must be addressed and the consequences understood. The major questions considered in this study were:

1. What is the effect on vehicle aerodynamics when the leading edge tiles are excessively damaged?

2. If a leading edge tile is damaged during early ascent, will the aerodynamic loads be such as to cause adjacent tiles to fail?

3. What is the minimum thickness of structure required to avert a burn-through during entry when a leading edge tile is damaged prior to entry?

4. What are the effects of early flow transition to turbulence on the downstream thermal protection system?

Questions relating to the system that must be answered are:

1. What thickness of tiles is required to limit the temperature on the structure to 550°F?

2. Based on an arbitrary skin thickness of 0.300 in., what structure design would meet a requirement with an RTV 560 adhesive maximum strain allowable at 160% for a bond line thickness of 0.020 in.?

3. Based on questions 1 and 2, is the weight of the advanced leading edge system significantly less than the RCC hot structure?

After identifying the above questions and concluding that the advanced RSI system would provide for a lighter weight system as compared with the state-of-the-art RCC hot structure, the study was directed to determine whether the system would indeed meet leading edge requirements.

AERODYNAMIC CHARACTERISTICS

As mentioned, one issue that had to be considered with the use of tiles on the leading edge is: what effect do damaged tiles have on the aerodynamic characteristics of the Orbiter? It can be speculated that small discontinuities would induce flow that could affect the position of the leading edge vortex and thus the load distribution. The aerodynamic characteristics most sensitive to the flow asymmetry as a result of damaged leading edge tiles would be in the lateral/directional stability aerodynamics.

To determine the aforementioned effect, wind tunnel experiments were selected as the most direct route to providing the necessary data. Consultation with the aerodynamic specialists J. Young and J. Underwood at the Johnson Space Center placed the highest concern in the Mach 3.5 range where the Orbiter control margins are at a minimum. This is the case even though the Orbiter aerodynamics would be more sensitive to tile damage in the transonic regime; but since the Orbiter has more control authority in the transonic regime, the expected changes are of lesser concern.

Aerodynamic tests were conducted on a 0.03 (3%) scale Model No. 45-0 supplied by Johnson Space Center and which was modified to simulate removed tiles on the right wing and leading edge. The modifications consisted of five cavities and filler pieces, each equivalent to at least four thoroughly damaged tiles. The cavities were distributed along the leading edge at positions that were estimated to cause maximum aerodynamic effects, figures 3(a)-3(c). The right wing and leading edge extension was also modified with tubing and orifices for oil flow visualization during the test. The tests were conducted at Mach numbers of 2.5, 3.0, and 3.5 at the maximum practical air densities.

The basis for evaluation of the tile damage effects was the differences between the force-and-moment coefficients for the baseline configuration and the configuration simulating leading edge damage. The testing logic was to determine the effects of the worst case damage (22 missing tiles) and then terminate or extend the investigation as results dictated. The basis of the change in aerodynamic coefficients was to be the "aerodynamic uncertainty" published in reference 3. The most favorable result of the test would be that the differences in measured coefficients for the baseline and damaged tile configurations were less than the corresponding data uncertainty. A complete description of the test, test conditions, and the basis of comparison are given in reference 8.

As mentioned, the logic for this investigation has been to consider the simple conservative option first and them follow or extend the investigation if necessary.

The results and analysis of the test of configurations 1 (tiles in) and 2 (tiles out) are tabulated in table 2. The results show that for the tested case of leading edge tile damage (22 missing tiles), the effects on the basic force-and-moment aerodynamic coefficients were small. The effects were generally less than 50% of the variations specified in reference 3. The effect that exceeded 50% was the moment coefficient at Mach 2.5, which was close to 75%. Since the leading edge tile damage was extreme, it was concluded that any similar damage would not affect the longitudinal or lateral/directional aerodynamics of the Orbiter in these Mach ranges. The experimental results can be explained in that the cavity area, compared with the actual wing area, is small and thus does not influence the aerodynamic coefficients (even though one can see local effects via oil flow visualization, fig. 4).

A companion question to the entry aerodynamic stability question is: will impact damage to a single tile during early ascent cause adjacent tile failure as a result of increased loads on the exposed tile wall, making the damage area larger? Preliminary calculations based on an ascent dynamic pressure of 800 lb/ft^2 predicts loads much less than 20 $lb/in.^2$ in tension and 10 $lb/in.^2$ in shear, which is less than the strength for the FRCI material, table 1. This, then, suggests that damage to any leading edge tile during ascent will not result in enlarged damage areas.

STRUCTURE

To establish the structure requirement, a list of constraints was imposed. These constraints were:

1. The aerodynamic shape was to be preserved.

2. The composite structure was to be extended 6 in. to the leading edge spar, which corresponds to the present RCC structure plus the one tile access panel.

3. The thickness of the structure was to be 0.30 in. where the relative deformation within a 6 in. by 6 in. region shall be less than 0.012 in.

4. Only aerodynamic loads were to be considered and adjustments for pressure profile to be accounted for (fig. 5).

5. The material properties at 500°F temperature were used in the design, table 1.

6. The leading edge spar to which the leading edge structure was to be attached was assumed rigid.

7. The stiffness enhancement of the tile attached to the structure was neglected. This assumed, therefore, that the tile moved with the structure as part of this rigid body. It was assumed that the relative deformation between the rigid tile and the substructure was accommodated by deformation of the bonding agent, RTU560. The maximum strain allowable for the RTU adhesive was assumed to be 160%. This translates into a total deformation of 0.032 in. for a 0.020 in. thick bond.

8. Only two composite materials, carbon/phenolic and polyimide/graphite, were to be considered for the structure, table 1.

Given the constraints and the material properties (table 1) a finite element model was constructed and a number of configurations were analyzed. The initial analysis was conducted on a simple structure, thickness of 0.3 in., as shown in figure 6. The result of the analysis indicates that neither material (polyimide/graphite or carbon/phenolic) nor any reasonable configuration would satisfy the deflection requirement (fig. 7). Modifications to the configuration were constructed and analyzed and are shown in figures 8 and 9. For the carbon/phenolic material (a material often used as an ablative heat shield), an acceptable configuration was found when the structure contained two end supports and a midspan support, each 0.3 in. thick. In addition, a 0.9 in. doubler across the top part of the structure was required (figs. 8(a)-8(c)). Substituting the structural composite, polyimide/graphite material for the carbon/phenolic, the structural configuration of figure 8 was found to be conservative in that the calculated deflections were approximately 0.0025 in. — well below the established criteria even with the doubler removed, figure 8(d). Therefore, continued modifications were undertaken resulting in an acceptable polyimide/graphite configuration which met the criteria where the center rib was reduced to 2 in. deep and 0.3 in. thick, and no doubler was required as shown in figure 9. A weight summary for the structures is given in table 3 (ref. 9).

THERMAL

Utilizing the Space Shuttle design entry trajectory 14414.1c (fig. 10) for the wing leading edge, an analysis was conducted to establish the tile thickness required to provide a bond line temperature, RTV tile interface attached to a 0.300 in. thick structure, of 550°F (Covington, M. A., personal communication, 1982). The tile thickness was determined using a modified charring material ablation (CMA) computer model operating in a material nonablation mode (Stewart, D. A., Ames Research Center, in-house unpublished data, March 1976). The assumptions used in the analysis were an adiabatic backwall, the tiles were fully catalytic, there was no convective cooling, and the tile emissivity was that which results after 100 mission use (Rakich, J. V., Ames Research Center, unpublished data, Feb. 10, 1983). The analysis resulted in a tile thickness of 1.87 in. at stagnation to maintain the required backface temperature of 550°F at the 55% semispan location and an angle of attack of 40°. To establish the weight of the RSI tiles, a series of analyses were performed at the 40%, 55%, 80%, 90%, and 99% semispan locations. In addition, thermal analysis along the chord at each semispan location was conducted. The results were interpolated to calculate the overall tile weight. Figure 11 shows the calculated section weight of tile/structure as a function of varying substrate thickness. Figure 12 gives the tile thickness (weight) as a function of the integrated heat load for both RTV/substrate temperature of 350°F and 550°F. The system temperature response for the advanced FRCI tile direct bonded to a composite structure system when subjected to the convective heating rates for the 55% semispan (fig. 10) is shown in figure 13. It should be noted that the bond line temperature of 510°F is only reached well after landing of the vehicle. As mentioned, the analysis is extremely conservative and a refined analysis would reduce the weights even further than those calculated here.

To address the question of what would be the thickness of substrate required in order to avert burn-through in the case of a severely damaged tile prior to entry, an analysis was conducted for the most conservative case where a tile is completely removed at stagnation, $\alpha = 40°$, and the substrate is subjected to the entry convective heating shown in figure 10. The analysis also accounted for the fact that the tile loss results in a cavity and, therefore, the substrate has a reduced view factor resulting in a higher surface temperature. The CMA program was used for the analysis

and resulted in a calculated surface recession of 0.180 in. at the stagnation point, 55% semispan, whereas for the 80% semispan the calculated recession was 0.120 in., table 4. It should be mentioned that the 80% semispan heating is more representative of the overall leading edge surface compared with the 55% which represents only the limited double shock area. The analysis, therefore, indicates that for the worst case, half the composite structure could be removed or ablated but no burn-through would occur. Figure 14 shows the calculated time-temperature profile for the 55% semispan regime. As illustrated, the temperature of the spar reaches 500°F well after landing some 2600 sec into the trajectory.

When a cavity occurs as a result of a damaged tile of radial heat transfer to the adjacent tile adhesive and structure results. A sophisticated three-dimensional heat transfer model is required for the analysis of this situation which was not available for this study. However, engineering judgment suggests that the adjacent tile bonds would be severely affected, but only after peak heating. This would result in a larger exposed area of the composite material, but does not alter the burn-through results.

In addition to the response of the composite substrate to the given thermal environment, consideration was also given to the question of downstream effects in the damaged tile case. The point that must be considered is that the missing or damaged tile will cause early transition which, in turn, would increase the heat transfer to the tiles on the wing aft of the leading edge, and the increased heating could cause an increase in bond-line temperature on the aluminum wing skin. Figure 15 gives calculated values for heating rates to the tile wing surface as a function of chord length for a turbulent equilibrium heating model (ref. 10), the tile design heating rates as developed for the aerodynamic heating data book (ref. 11), and some actual data collected from the catalytic coating experiments conducted during the Orbiter Flight Test Program (ref. 12). It can be seen that early transition should not cause concern for the wing structure since the design case is sufficiently conservative to accommodate the change.

Consideration was also given to a case of a missing or damaged tile adjoining the stagnation point but on the windward side, and the effects to the immediate downstream tile. An analysis by R. J. Maraia (ref. 12), addressing this question for body tiles on the Space Shuttle prior to the first flight, is applicable in this particular situation. The analysis points out that downstream of a cavity the heating rate increases. Also, the heating rate on the cavity wall (windward side) increases from bottom to top. The tile wall heating rates increase to a maximum of two times the upstream heat rate which would cause a rounding of the tile edge (fig. 16). Again, as in the previous case, consideration was given to the loss of the adjacent tile due to degradation of the bond line with the associated failing of tiles. It can be concluded from the analysis that some degradation of the bond line does occur; however, since the heating rate is one-half that of the surface, if any failure occurred it would occur well after peak heating. In regards to the increased heating rate to the downstream tiles, the tile thickness is sufficient to accommodate the rate change with little if any effect to the structure.

For the missing or damaged tile case, the burn-through question is based on the composite substrate performing in an ablation mode with little or no spallation. In order to verify this assumption, a series of tests was conducted in the Ames Research Center aerothermodynamic test facility at test conditions representative of stagnation point heat transfer rates for trajectory 14414.1c at specific semispan locations as mentioned earlier. The tests were conducted on flat disk models 2.5 in. in diameter at heat fluxes ranging from a low of 47 to a high of 75 Btu/ft^2 sec. The

details of these tests will be published separately; however, the test results showed that for the structural composite evaluated, spallation was the dominant mode of failure. Total recession is in excess of the calculated thermochemical ablation levels and must be addressed in the final system design.

SYSTEM

The aerodynamic, structural, and thermal studies indicate that the advanced leading edge concept is viable. Based on these findings, a system review was undertaken. In the review, questions pertaining to in-line gaps or gaps between tiles in general had to be addressed, as well as how to handle the internal temperature associated with the damaged tile case to prevent damage to the basic wing structure (leading edge spar). The question relating to gaps could be answered directly by the tile alignment design and the use of gap fillers that meet the design criteria. The protection of the wing leading edge aluminum spar during entry in the damaged tile scenario (even though burn-through does not occur) requires an insulation material. The material selected to provide the protection is a low density, 2 lb/ft^3 polyimide foam. The polyimide foam functions as a low density insulator and ablator with a decomposition temperature of 600°F, thereby limiting the temperature to the spar to the required 350°F.

From the study, we are now able to determine a weight compilation of the advanced TPS components and compare it with the baseline RCC system. Table 5 shows that a considerable weight savings can be realized with the advanced leading edge concept. A schematic depicting the advanced leading edge with all its components is shown in figure 17. The system is relatively simple compared with the state-of-the-art system shown in figure 1.

CONCLUSIONS

1. The analysis indicates that the advanced leading edge concept can withstand the projected environment and that a weight savings of up to 800 lb over the RCC hot structure is possible.

2. Loss of tiles on the leading edge during ascent does not affect the entry aerodynamics in the critical Mach 2.5-3.5 regime.

3. The structure and foam which serve as an ablator provide a degree of redundancy to the system.

ACKNOWLEDGMENTS

The authors express their thanks to Dr. M. Tobak for his expert help on the aerodynamic questions, and Mr. N. Zimmerman for his aid in developing the design layout for the direct bond/tile system and for his thoughtful review of the paper.

REFERENCES

1. Curry, D. M.; Latchem, J. W.; and Whisenhunt, G. B.: Space Shuttle Orbiter Leading Edge Structural Subsystem Development. AIAA Paper 83-10483, Jan. 10-13, 1983.

2. Curry, D. M.; Cunningham, J. A.; and Frahm, S. R.: Shuttle Orbiter Leading Edge Structural Subsystem Thermal Performance. AIAA Paper 82-004, Jan. 11-14, 1982.

3. Aerodynamic Design Data Book, Vol. 1, RI/SD, SD72-SH-0060-1M, Los Angeles, Calif., Nov. 1980.

4. Leiser, D. B.; Smith, M.; and Goldstein, H. E.: Developments in Fibrous Refractory Composite Insulation. Bull. Amer. Rer. Soc., vol. 60, no. 11, 1981, pp. 1201-1204.

5. U.S. Patent No. 4,148,962, 1974.

6. Morita, W. H.: Direct Bond RSI Tile on Graphite/Polyimide Structure. Presented at NASA Symposium: Recent Advances in Thermal Protection Systems and Structures for Future Space Transportation Systems, Langley Research Center, Langley, Va., Dec. 6-8, 1983, to be published.

7. Coe Engineering, Inc.: Effect of Leading Edge Tile Damage on the Aerodynamic Characteristics of the Space Shuttle Orbiter. Final Report, March 1983 (JPL Contract No. 955994).

8. Jet Propulsion Laboratory, Interoffice Memorandum 3534:83:24, Feb. 23, 1983.

9. Entry Aeroheating Design Data Book, RI/SD, SD73-SH-0184C, 1980, Los Angeles, Calif.

10. Space Shttle Orbiter Entry Aerodynamic Heating Data Book, SD73-SH-0184C, pp. 402-405.

11. Stewart, D. A.; Rakich, J. V.; and Lanfranco, M. J.: Catalytic Surface Effects on Space Shuttle Thermal Protection Surface During Earth Entry of Flights STS-2 Through STS-5. Shuttle Performance: Lessons Learned (compiled by J. P. Arrington and J. J. Jones). Paper 2283, Part 2, NASA Langley Research Center Conference, March 1983.

12. Maraia, R. J.: Memorandum ES 3-80-17M, Johnson Space Center, Feb. 8, 1980.

TABLE 1.- MATERIAL PROPERTIES

RSI	FRCI 40-20	
Tensile strength, weak	180 lb/in.^{2} AVG	
Tensile strength, strong	350 lb/in.^{2} AVG	
Tensile modulus, weak	43×10^3 lb/in.^{2} AVG	
Coefficient of expansion	11.4×10^7 in./in. °F	
Density	20 lb/ft^3 NOM	
Advanced composite	**Polyimide graphite**	**Carbon phenolic**
Tensile strength (RT)	94×10^3 lb/in.^{2}	12×10^3 lb/in.^{2}
Tensile strength (600°F)	35×10^3 lb/in.^{2}	8×10^3 lb/in.^{2}
Tensile modulus (RT)	10.4×10^6 lb/in.^{2}	2×10^6 lb/in.^{2}
Tensile modulus (600°F)	7.6×10^6 lb/in.^{2}	1×10^6 lb/in.^{2}
Foam insulation	**Polyimide**	
Density	1.5 lb/ft^3	
Decomposition temperature	650°F	

TABLE 1.- CONCLUDED

Thermal properties			
Temperature, °F	Specific heat, Btu/lb °F	Conductivity, Btu/ft-sec °F	Emissivity
RCG coating			
0	0.150	0.000139	0.86
400	.225	.000165	.89
600	.247	.000178	.88
800	.260	.000190	.87
1000	.269	.000200	.85
1200	.278	.000210	.84
1400	.283	,000219	.83
1600	.284	.000228	.82
1800	.293	.000236	.815
2000	.298	.000246	.81
2200	.301	.000256	.80
2400	.305	.000266	.795
RSI			
0	0.15	0.0000092	0.8
400	.225	.0000168	.8
600	.247	.0000200	.8
800	.260	.0000213	.8
1000	.269	.0000250	.8
1600	.289	.0000342	.8
2000	.298	.0000396	.8
2300	.30	.0000476	.8
P.I./graphite and carbon/phenolic			
0	0.216	0.000186	
100	.255	.000200	
250	.300	.000221	
400	.345	.000242	
500	.375	.000256	

TABLE 2.- REMOVED TILE EFFECT ON AERO CONSTANTS

	ΔC_L [a]	ΔC_D [a]	ΔC_m [a]	ΔC_Y [a]	ΔC_n [a]	ΔC_ℓ [a]
Count M = 2.5	51	51	51	51	51	51
Maximum coefficient recorded	0.0067	0.0018	0	0.0044	0.0002	0.0005
Minimum coefficient recorded	-.0094	-.0034	-.004	-.006	-.0006	-.0002
Mean	3.25E-4	1.27E-4	-.00245	-7.1E-4	-1.3E-4	2.22E-4
Variance	1.10E-5	1.26E-6	1.09E-6	3.81E-6	2.87E-8	3.49E-8
Standard deviation	.003317	.001122	.001043	.001953	1.70E-4	1.87E-4
3^a standard deviations	.009950	.003366	.003128	.005858	5.09E-4	5.61E-4
Maximum (mean+, mean-)	.010276	.003493	.005581	.006565	6.34E-4	7.82E-4
Variation (ref. 3)	0.05	0.028	0.0073	0.0265	0.001	0.001
Tile removal effect, percent variation	21	12	76	25	63	78
Count M = 3.0	49	49	49	49	49	49
Maximum coefficient recorded	0.002	0.0005	0.0023	0.0002	0.0003	0.0003
Minimum coefficient recorded	-.0061	-.0018	-.0005	-.0032	0	0
Mean	-.00237	-8.4E-4	.001029	-.00194	1.33E-4	1.43E-4
Variance	3.79E-6	2.54E-7	5.61E-7	4.86E-7	6.83E-9	5.42E-9
Standard deviation	.001947	5.04E-4	7.49E-4	6.97E-4	8.26E-5	7.36E-5
3^a standard deviations	.005841	.001512	.002247	.002092	2.48E-4	2.21E-4
Maximum (mean+, mean-)	.008211	.002353	.003276	.004028	3.81E-4	3.64E-4
Variation (ref. 3)	0.051	0.031	0.0073	0.027	0.001	0.001
Tile removal effect, percent variation	16	8	45	15	38	36
Count M = 3.5	49	49	49	49	49	49
Maximum coefficient recorded	0.0028	0.0006	0.0011	0	0.0002	0.0004
Minimum coefficient recorded	-.0061	-.0021	-.0004	-.005	0	0
Mean	-.00105	-5.3E-4	1.45E-4	-.00273	1.59E-4	2.51E-4
Variance	6.23E-6	4.44E-7	1.48E-7	8.64E-7	2.88E-9	3.80E-9
Standard deviation	.002496	6.66E-4	3.85E-4	9.30E-4	5.37E-5	6.17E-5
3^a standard deviations	.007487	.001998	.001156	.002789	1.61E-4	1.85E-4
Maximum (mean+, mean-)	.008533	.002525	.001300	.005523	3.20E-4	4.36E-4
Variation (ref. 3)	0.056	0.034	0.008	0.02968	0.001	0.001
Tile removal effect, percent variation	15	7	16	19	32	44

Note: C_Y variation is ratio of lift and side force gage capacities (0.53)

[a]Aerodynamic coefficients

C_L - lift coefficient C_Y - side force coefficient

C_D - drag coefficient C_n - force moment coefficient

C_m - pitching moment C_ℓ - rolling moment coefficient

Ref. 3: "Aerodynamic Design Data Book," volume 1

TABLE 3.- WEIGHT COMPARISON AT PANEL 18

RCC (with one seal)[a]	42.5 lb
Carbon phenolic baseline	44 lb/panel
Graphite polyimide baseline without doubler	31 lb/panel
Model 1	28.5 lb/panel

[a]Reference less certification system description, D. M. Currey, 5/2/80.

TABLE 4.- STRUCTURE THERMAL RESPONSE — REMOVED TILE CONDITIONS

Semispan	Angle of attack, deg	Maximum flux at stagnation, Btu/ft^2-sec	Total recession,[a] in.	Maximum surface temperature, °F	Maximum temperature at aluminum spar, °F
40-55	40	54	0.180	~3400	350
80	40	35	.120	~2900	350

[a]Based on carbon phenolic properties.

TABLE 5.- COMPONENT WEIGHTS, LB

Substrate design	Substrate material	Tile system weight[a]		Adhesive weight	Gap filler	Foam weight	Structure weight[c]	Total weight	
		550°F[b]	350°F[b]					550°F[b]	350°F[b]
RCC[d]	Hot structure		Hardware, etc. 1875.00, RCC 1525.00, Total 3400.00						
Baseline	Carbon/ phenolic (ablator)	700	1200	30	50	100	2175	3055	3625
Baseline	Graphite/ polyimide (without doubler)	700	1200	30	50	100	1710	2660	3160
1	Grphite/ polyimide	700	1200	30	50	100	1631	2581	3080

[a]Substrate temperature limit.

[b]Tile FRCI 40-20 + coating.

[c]Includes hardware.

[d]Less certification system description, D. M. Curry, 5/2/80.

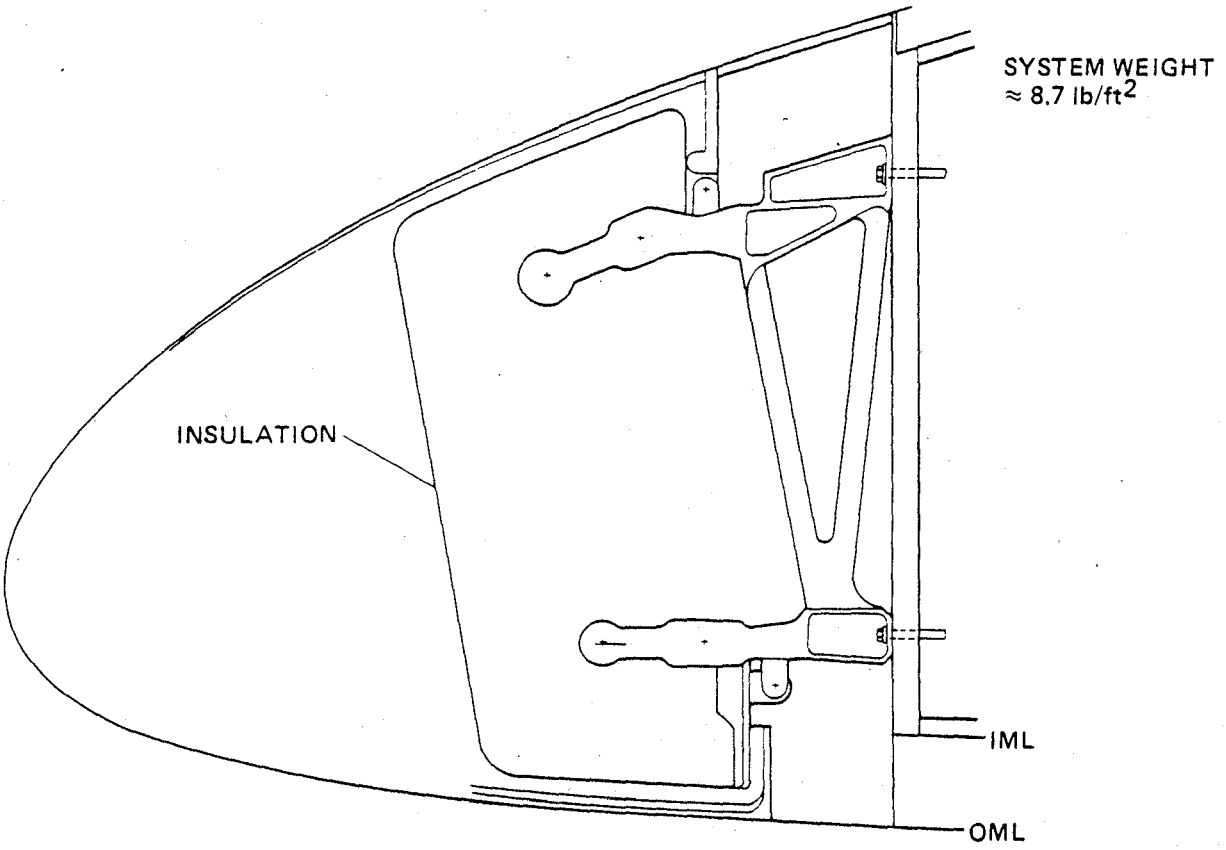

Figure 1.- Current Space Shuttle leading-edge system RCC hot structure.

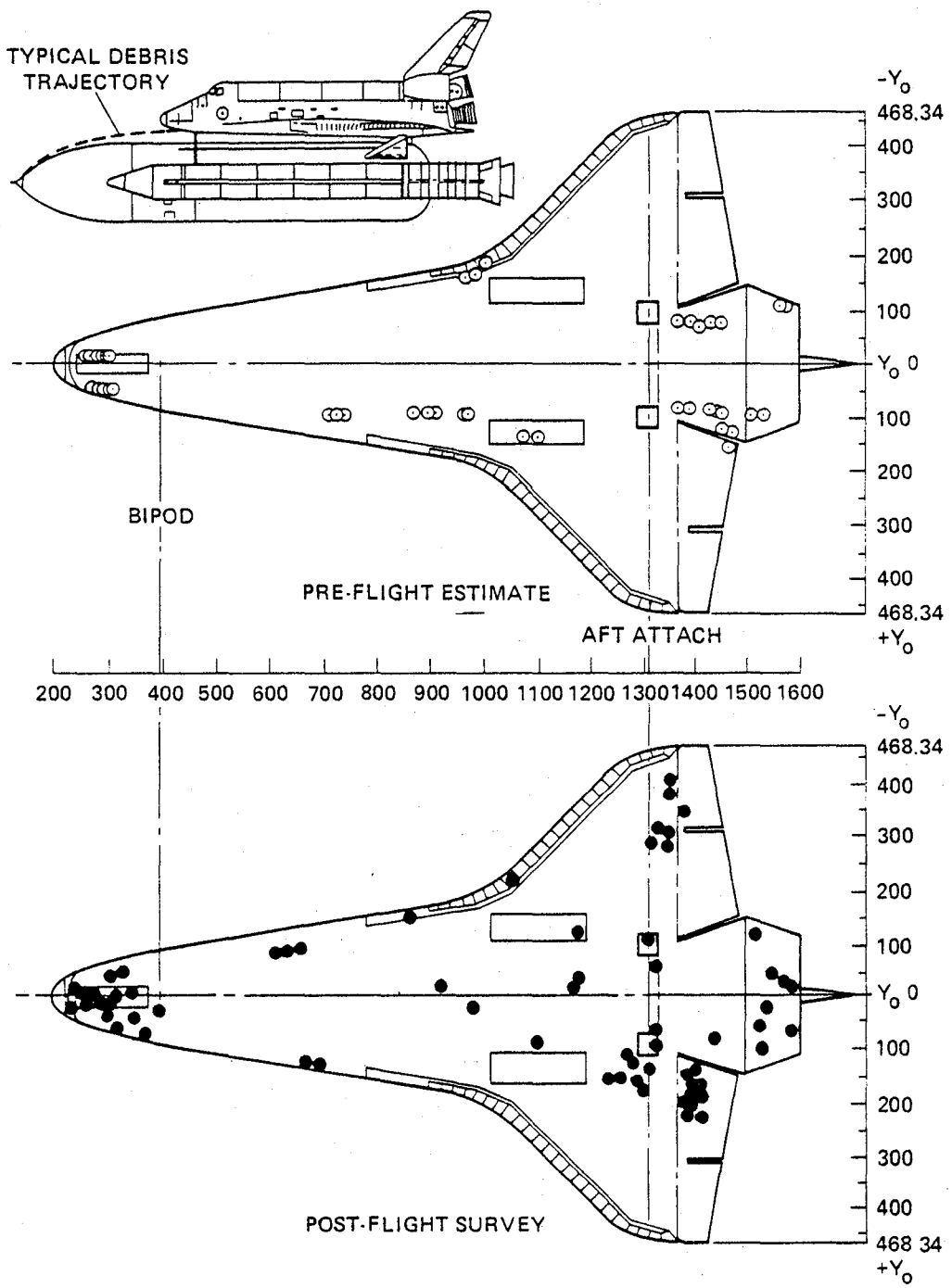

Figure 2.- STS-1 debris impact map of Orbiter — lower surface (ref. 6).

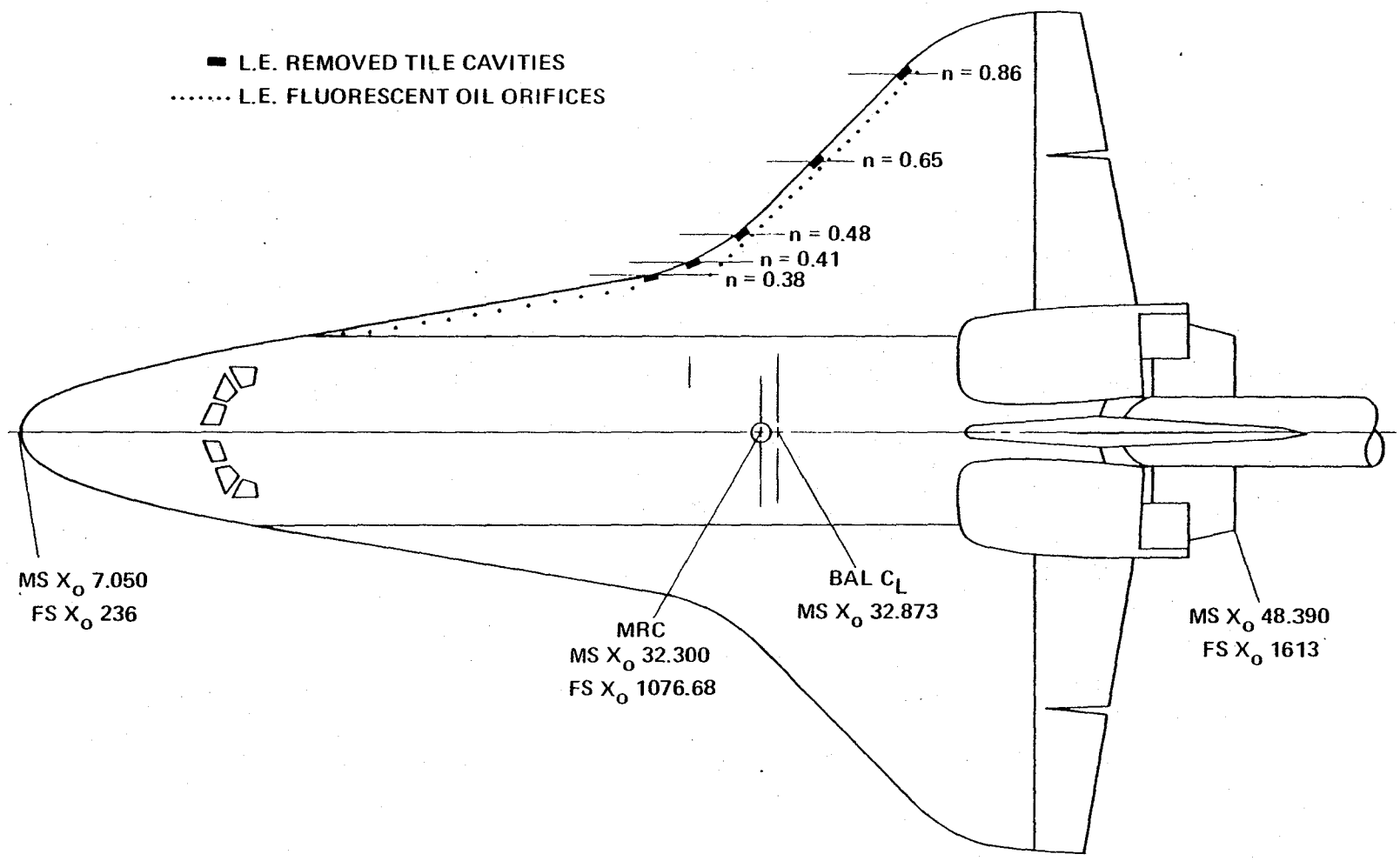

(a) 0.03 scale model 45-0 modifications for leading-edge tile test.

Figure 3.

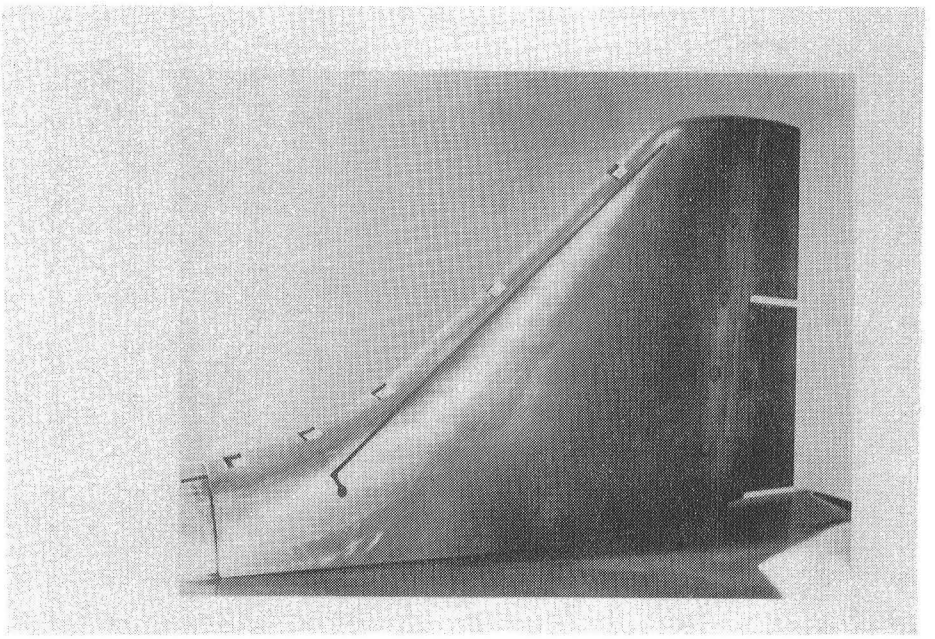

(b) Photo of modified Orbiter model 45-0 showing missing tile cavities.

Figure 3.- Continued.

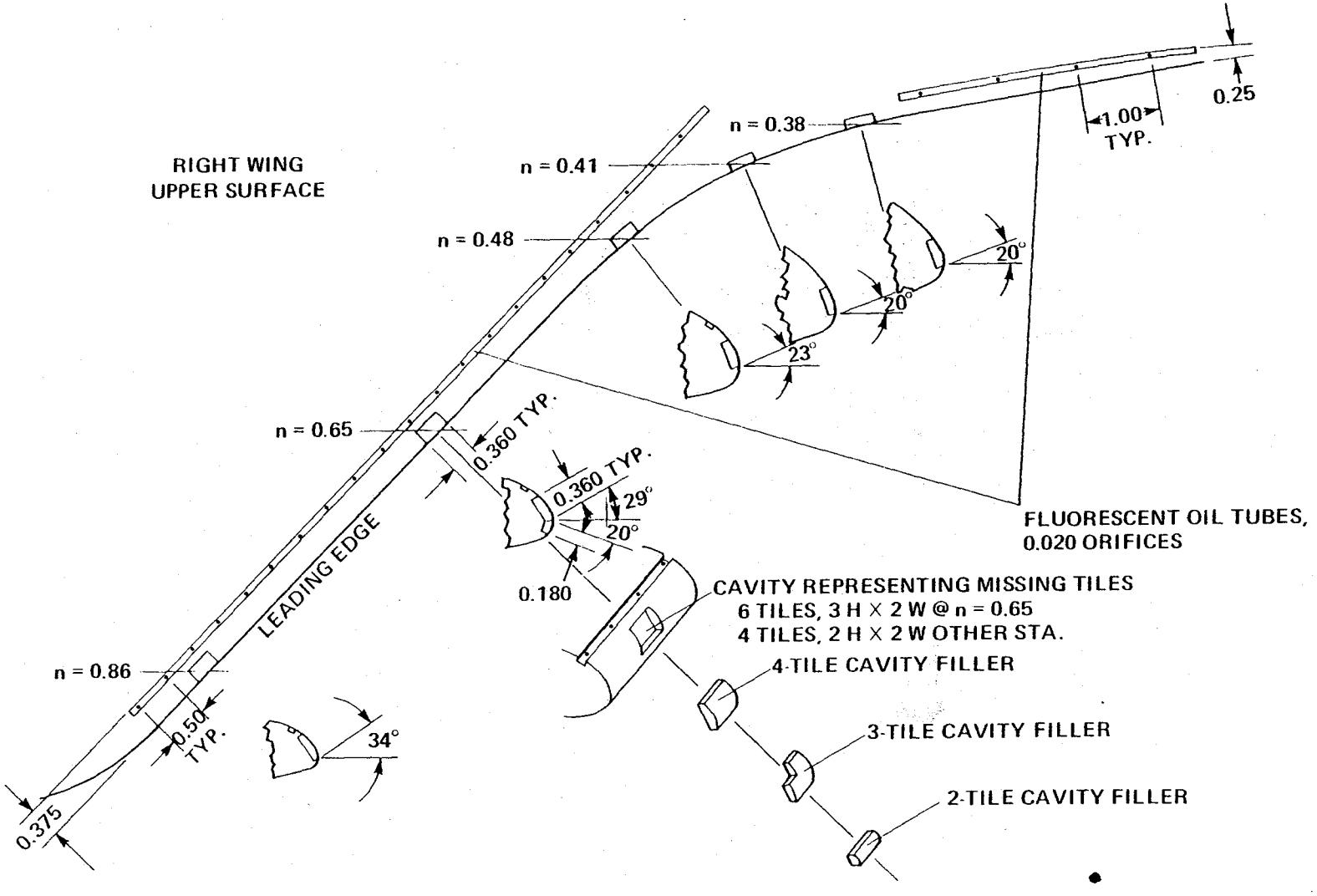

(c) 0.03 scale model 45-0 leading-edge tile geometry.

Figure 3.- Concluded.

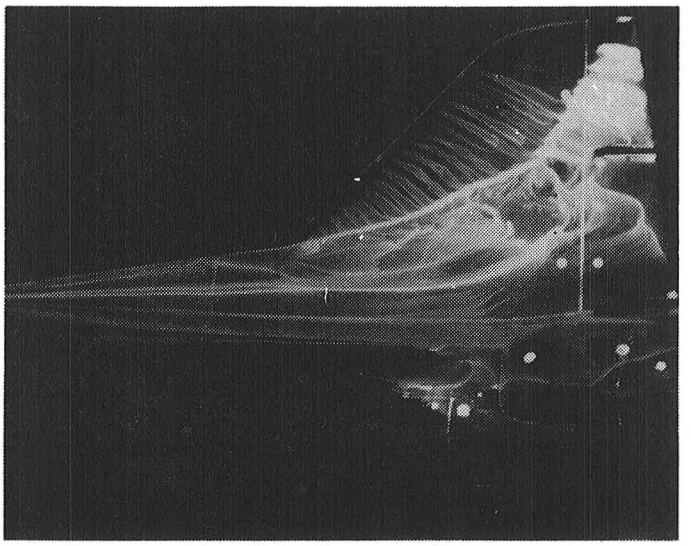

MACH 3.5 β 0° TILE IN

α 15.8°

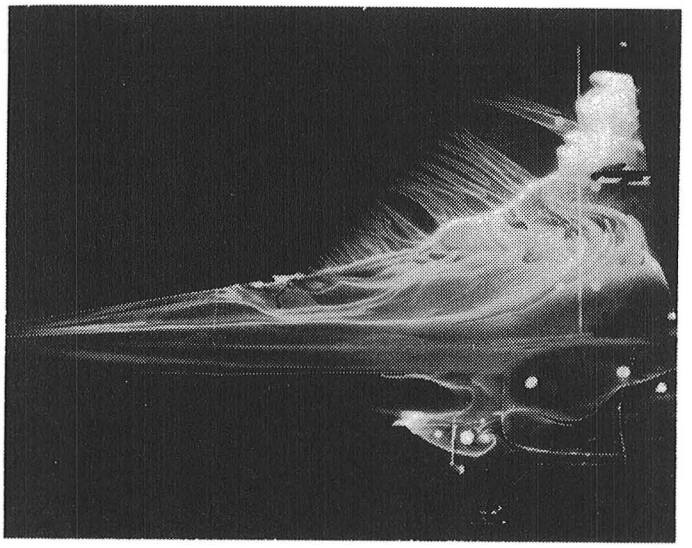

MACH 3.5 β 0° TILE OUT

α 15.8°

Figure 4.- Removed tile effect — oil flow visualization.

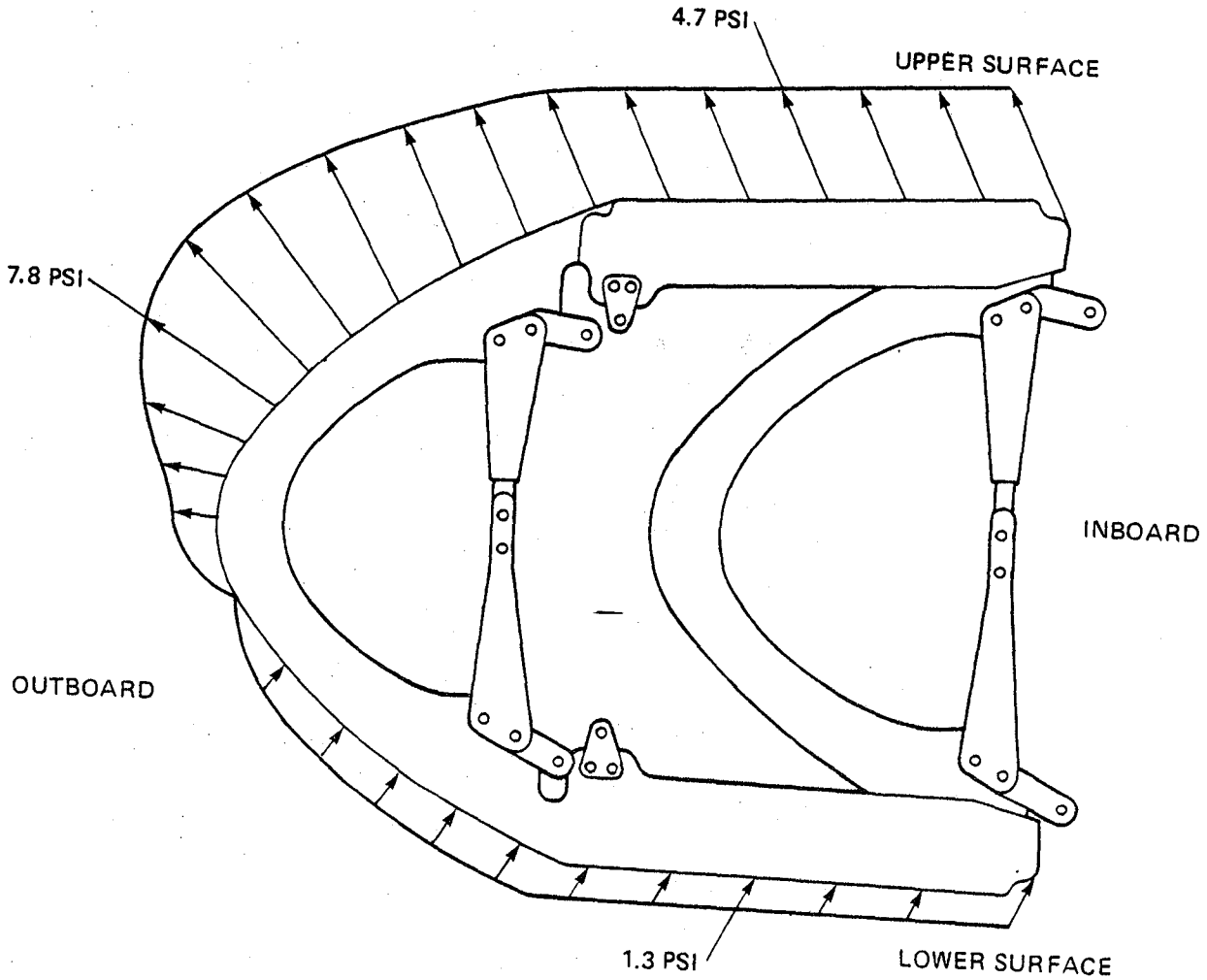

Figure 5.- Current Space Shuttle leading-edge system RCC hot structure (ref. 3).

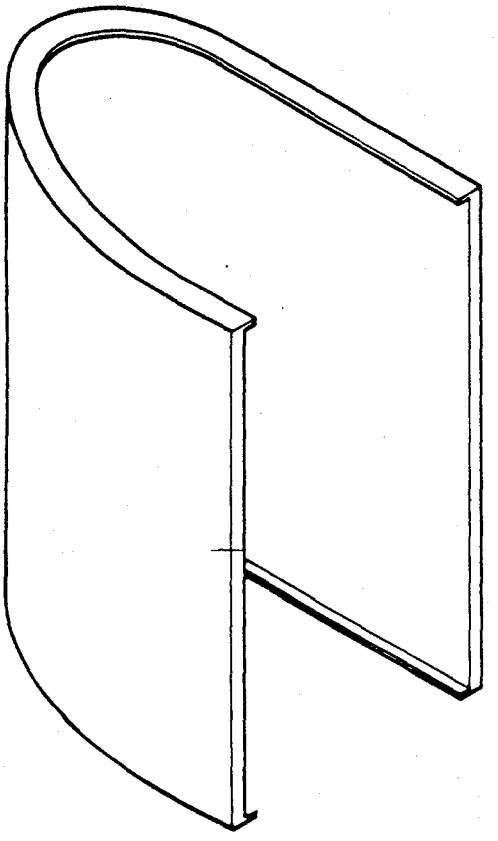

Figure 6.- Baseline structure or configuration.

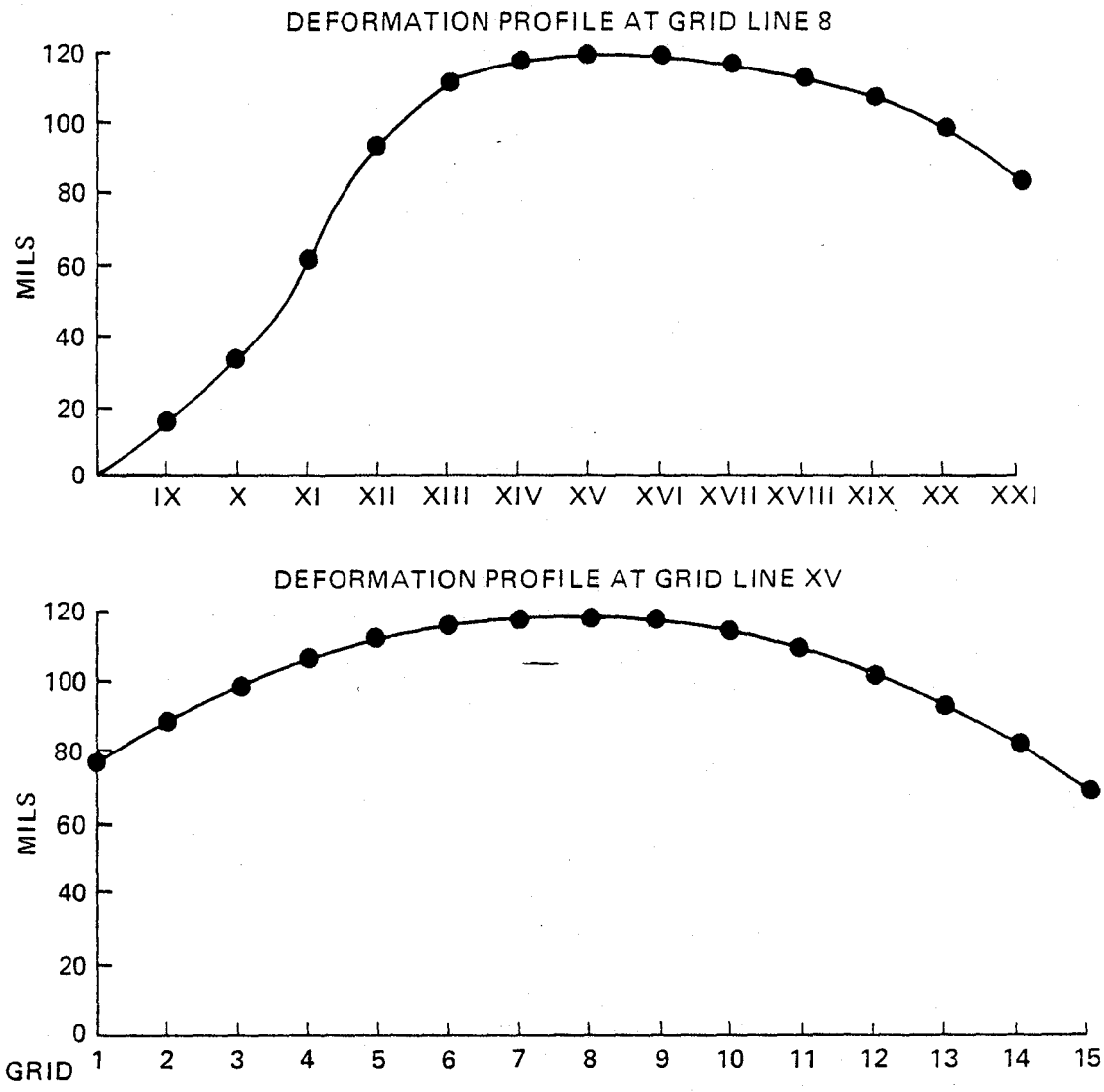

Figure 7.- Deformation profile for composite material.

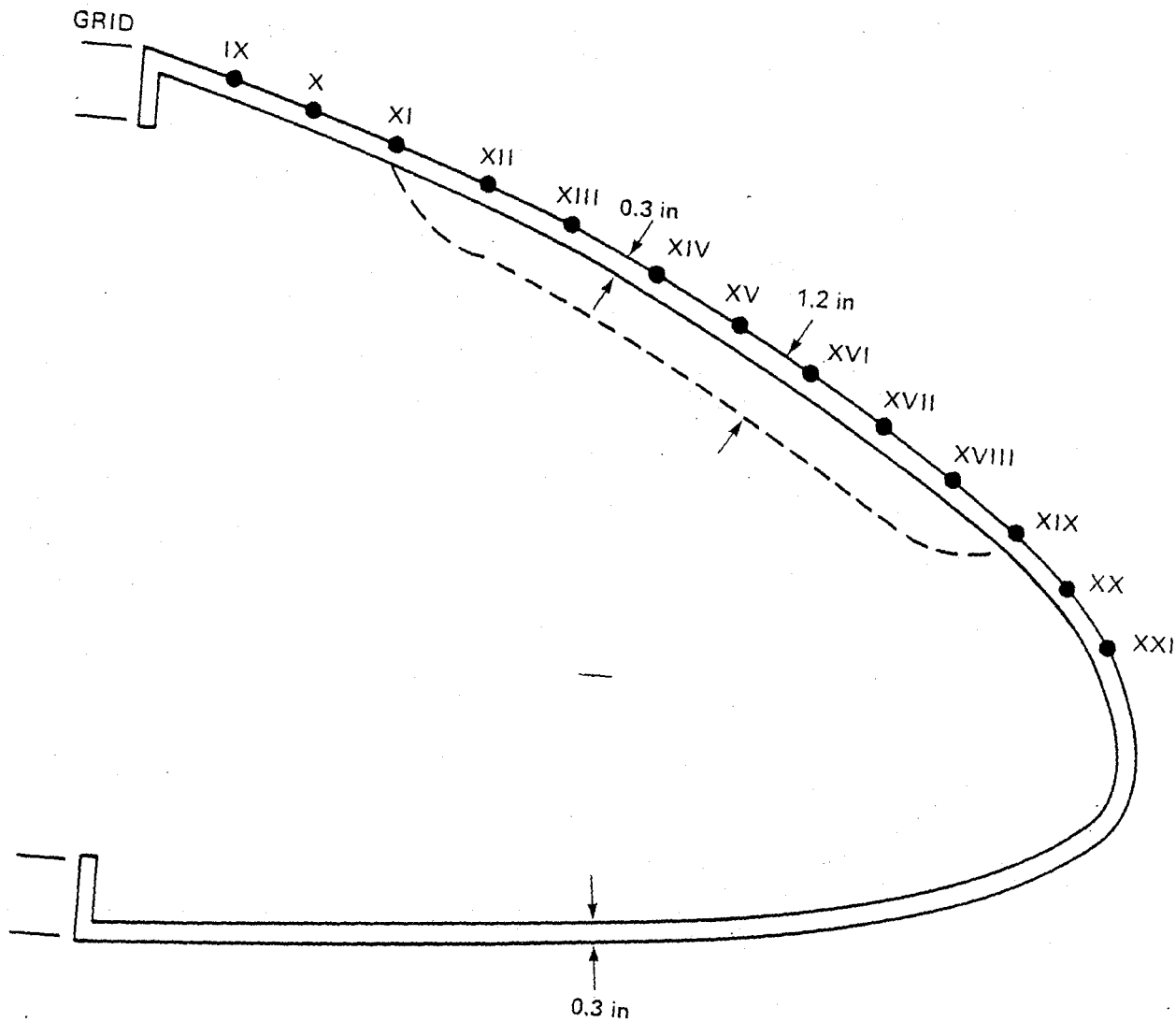

(a) Cross section carbon/phenolic structure.

Figure 8.

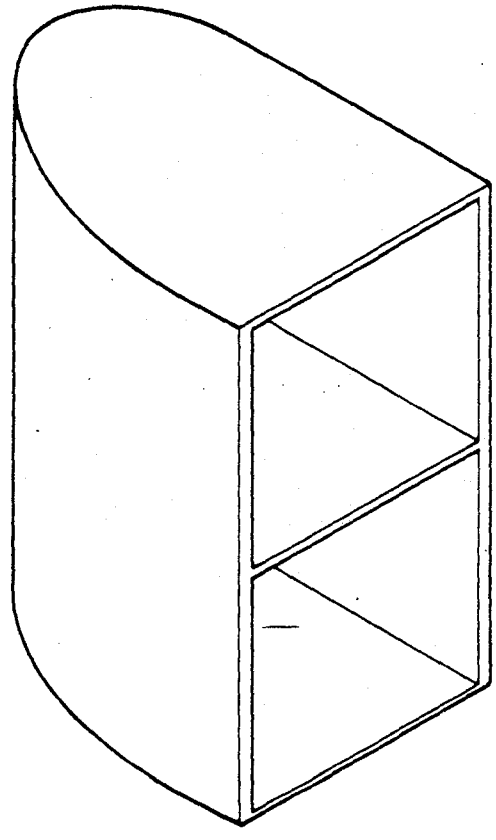

(b) Carbon/phenolic structure.

Figure 8.- Continued.

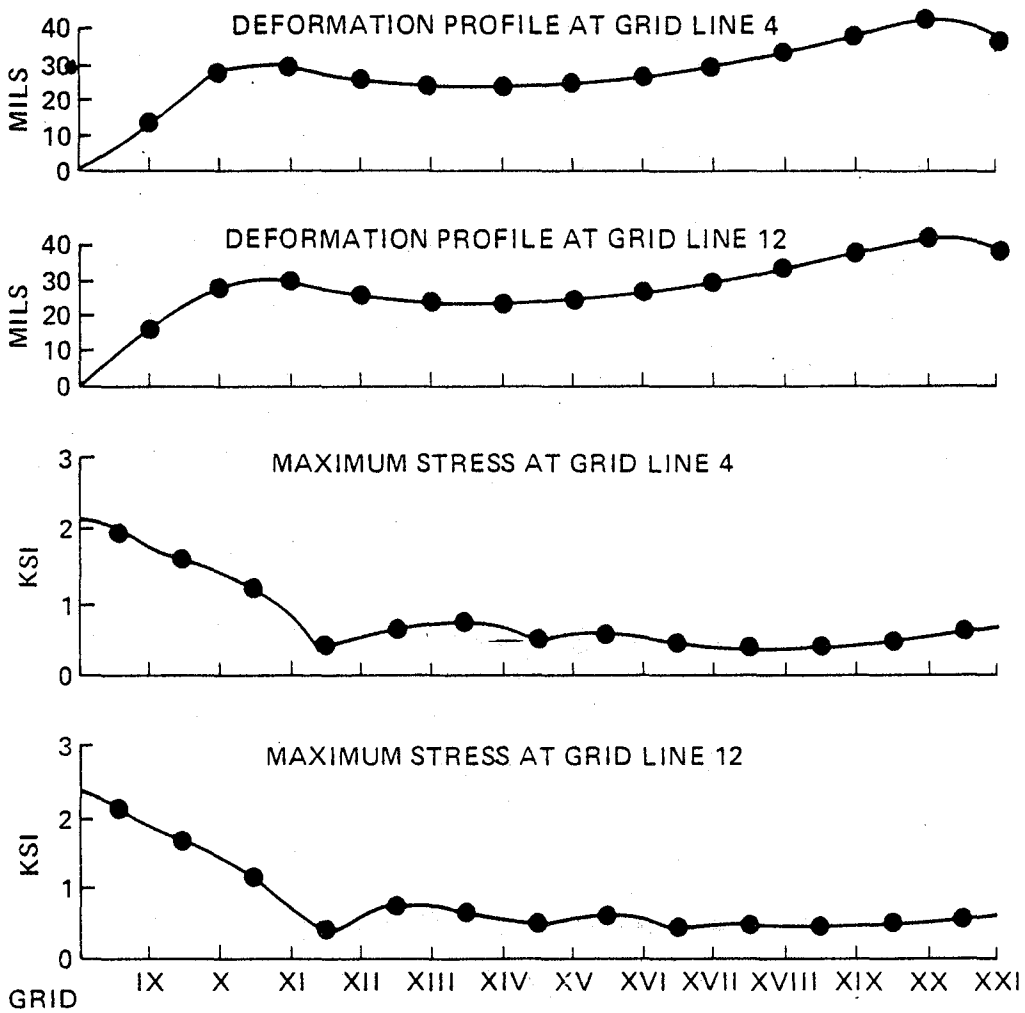

(c) Stress and deformation profile of carbon/phenolic model.

Figure 8.- Continued.

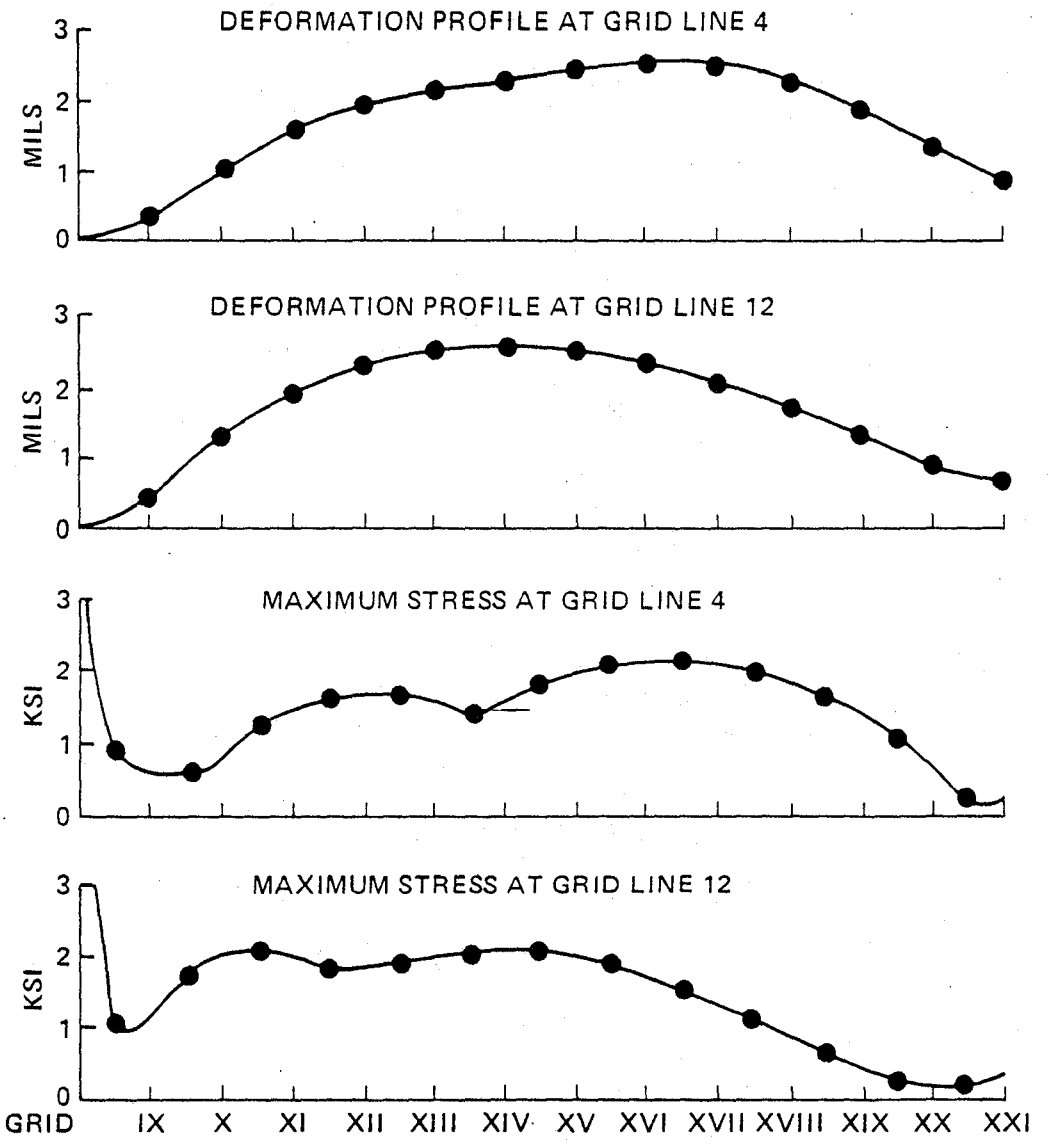

(d) Stress and deformation profile for polyimide/graphite composite.

Figure 8.- Concluded.

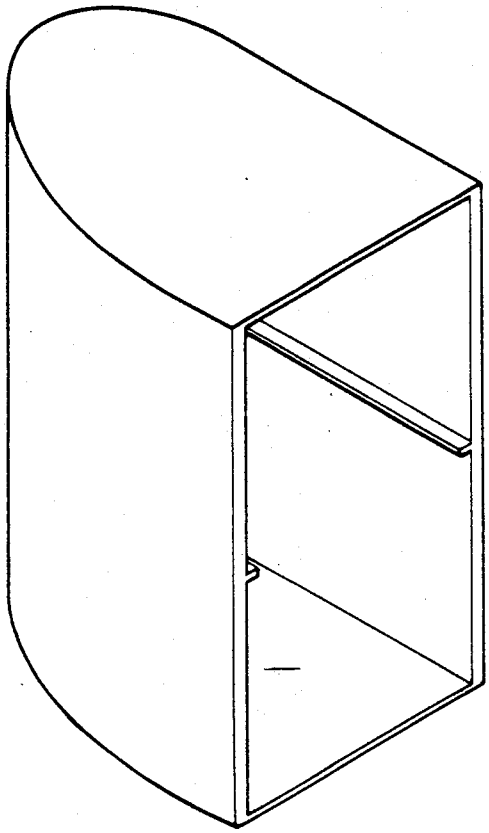

(a) Graphite/polyimide structure.

Figure 9.

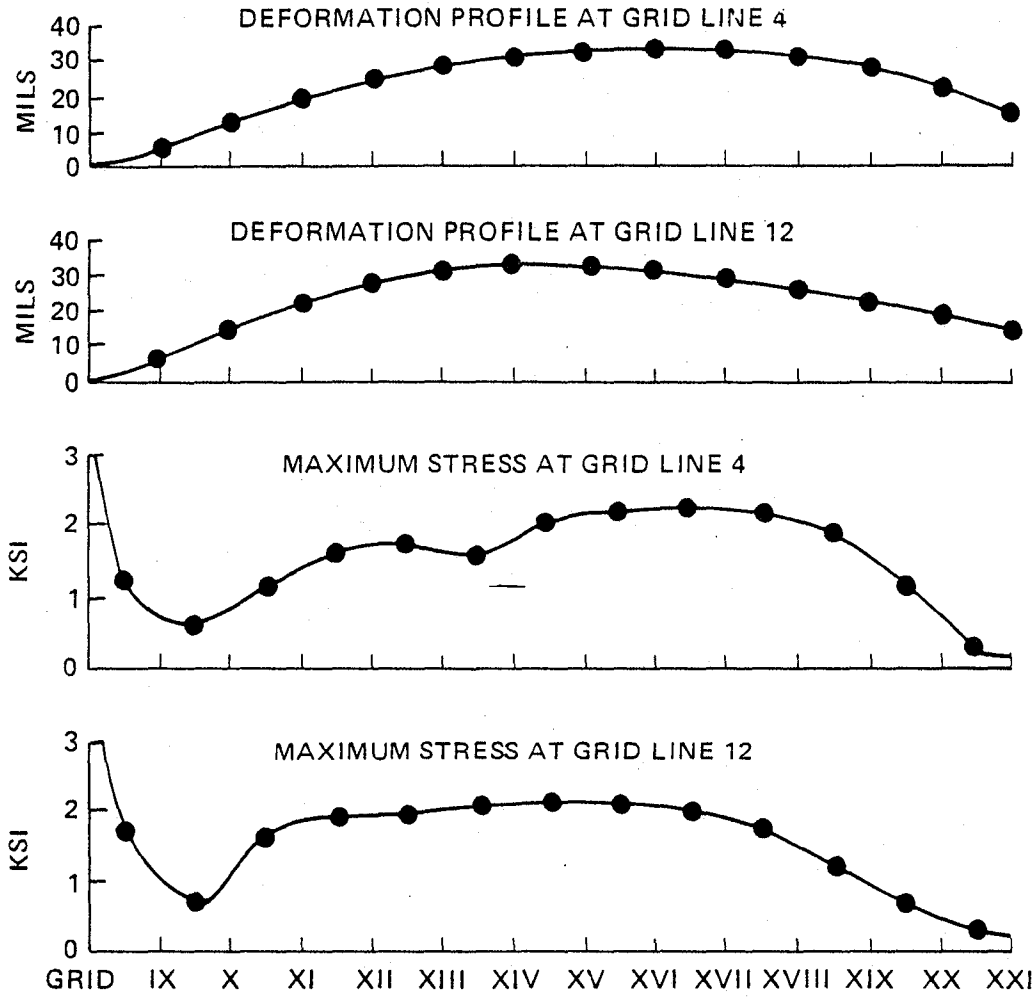

(b) Stress and deformation profile of graphite/polyimide model.

Figure 9.- Concluded.

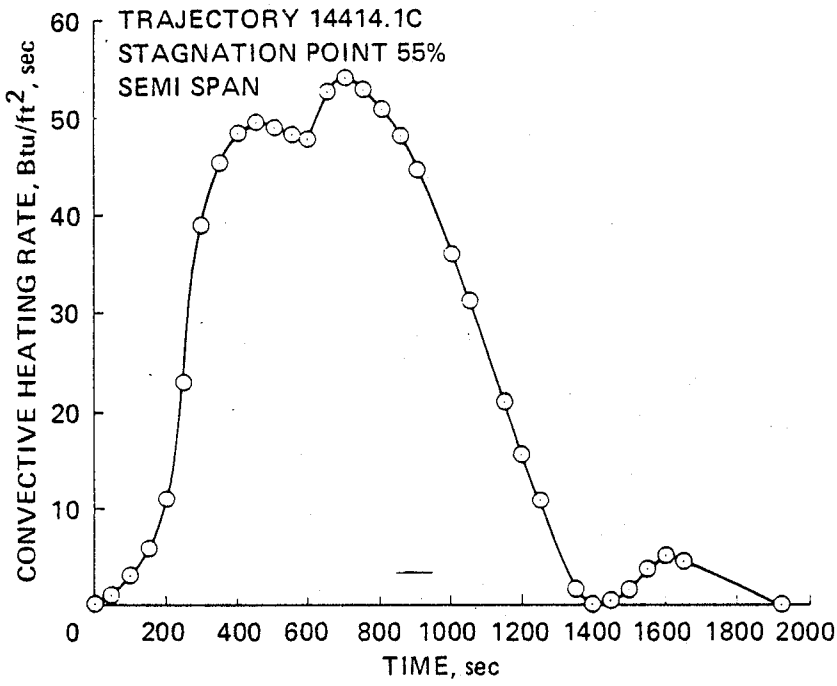

Figure 10.- Convective heating rate — trajectory 14414.1c.

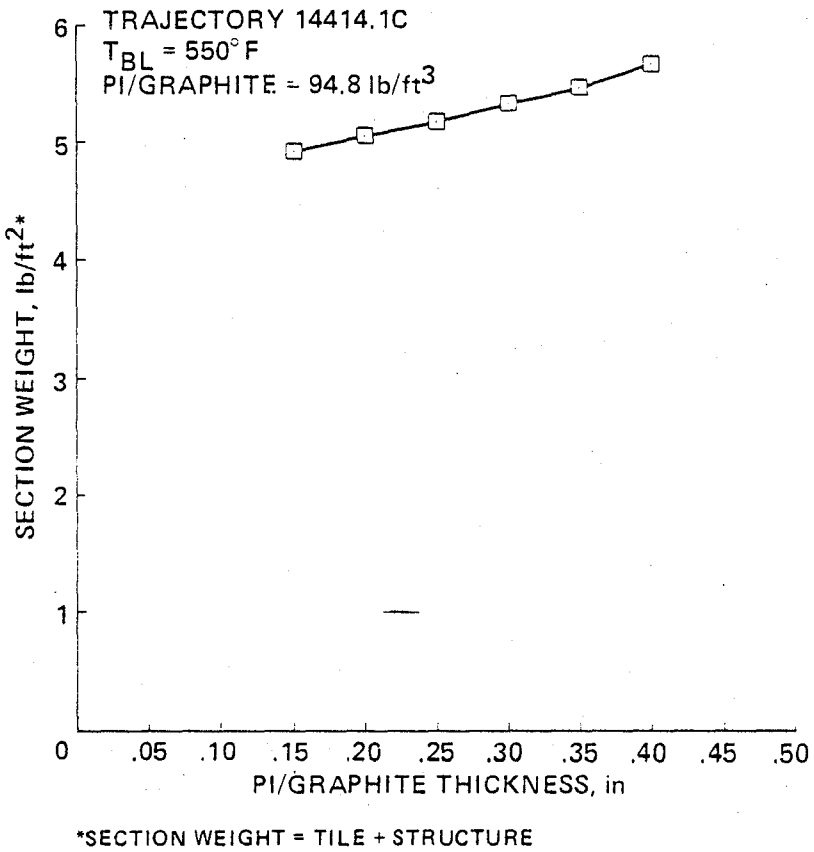

Figure 11.- Section weight-polyimide/graphite thickness relationship.

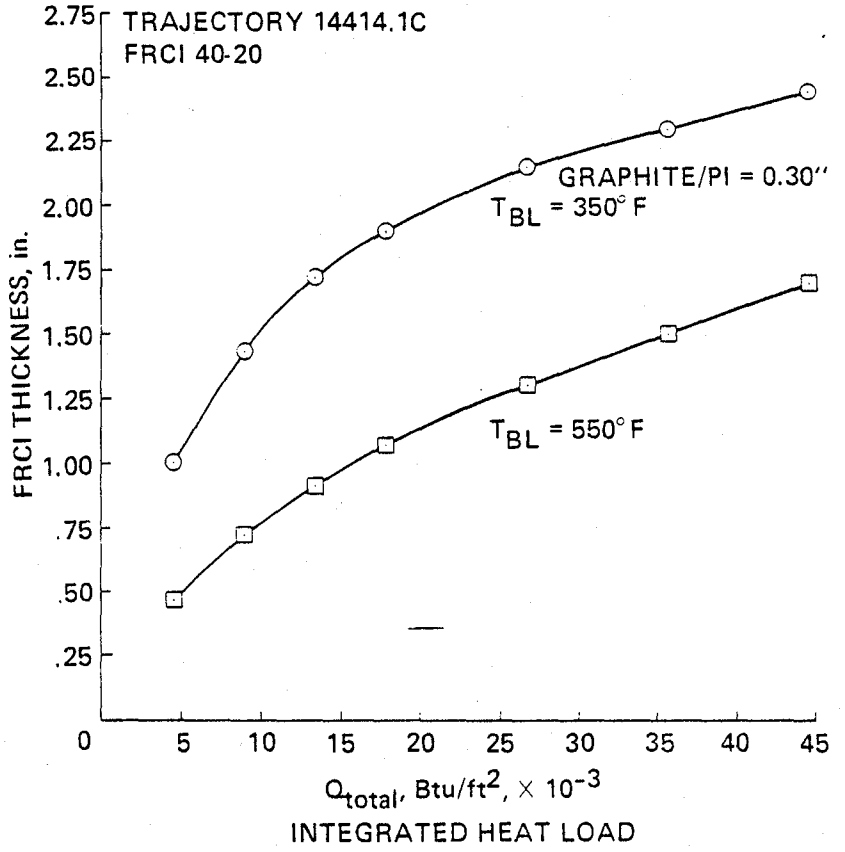

Figure 12.- FRCI thickness-integrated heat load relationship.

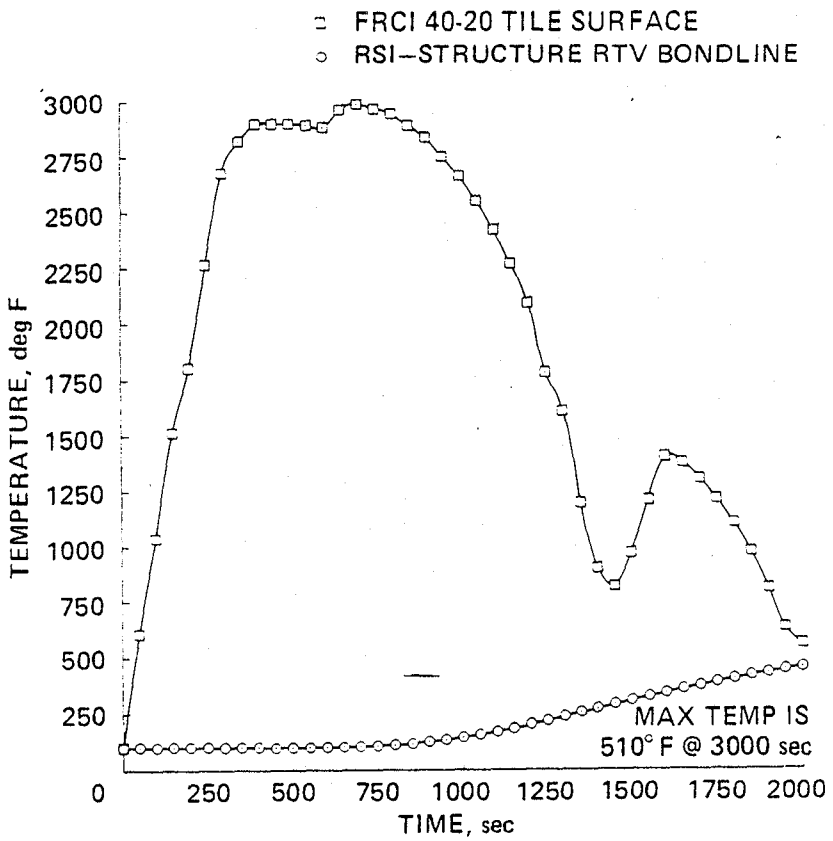

Figure 13.- System time-temperature response to trajectory 14414.1c.

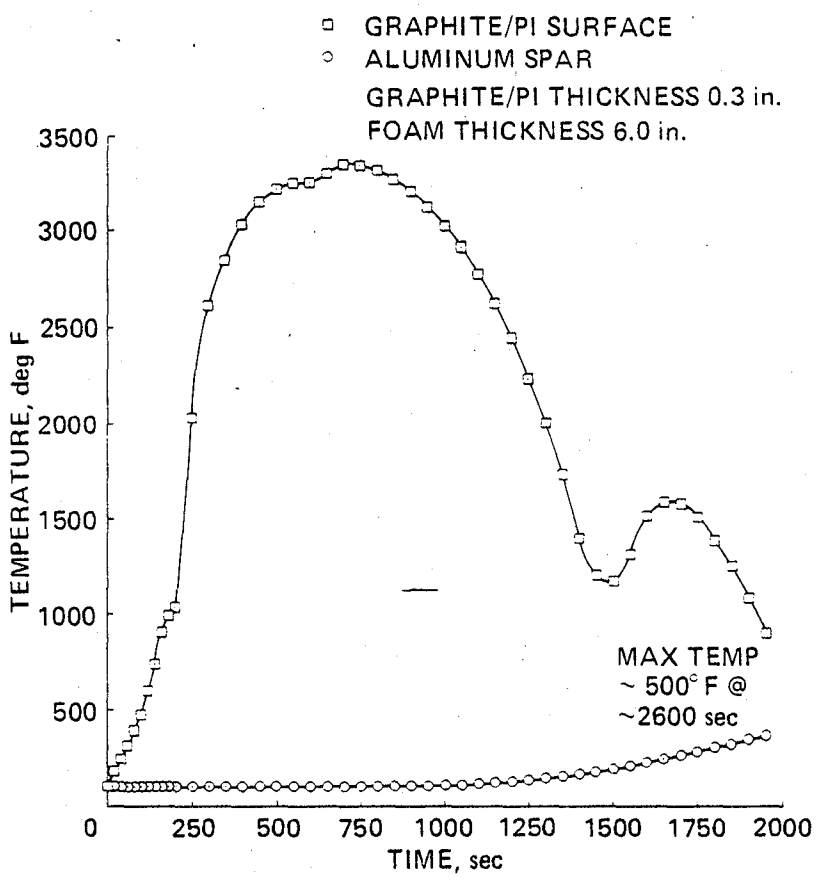

Figure 14.- Removed tile case-system time-temperature response to trajectory 14414.1c.

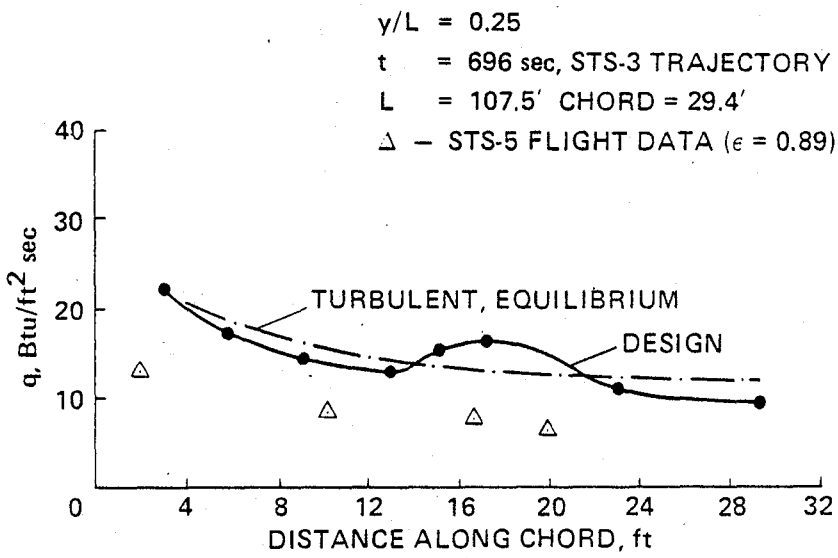

Figure 15.- Effect of removed tile at leading edge on down stream wing heating rate.

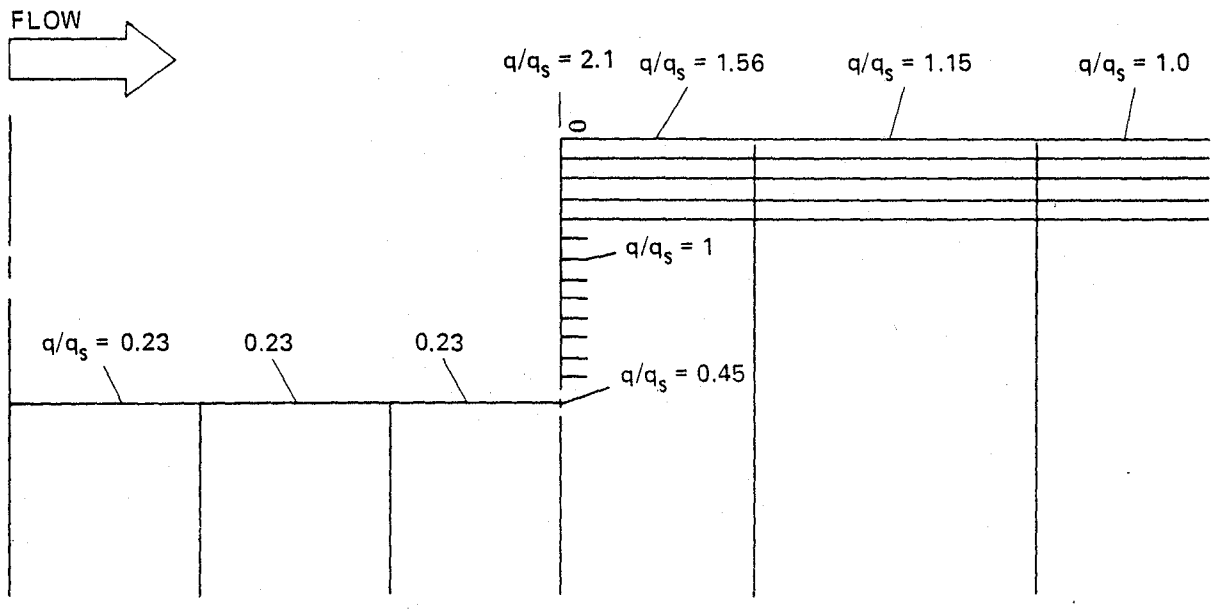

Figure 16.- Effect of removed tile on heating rate distribution in the vicinity of a cavity.

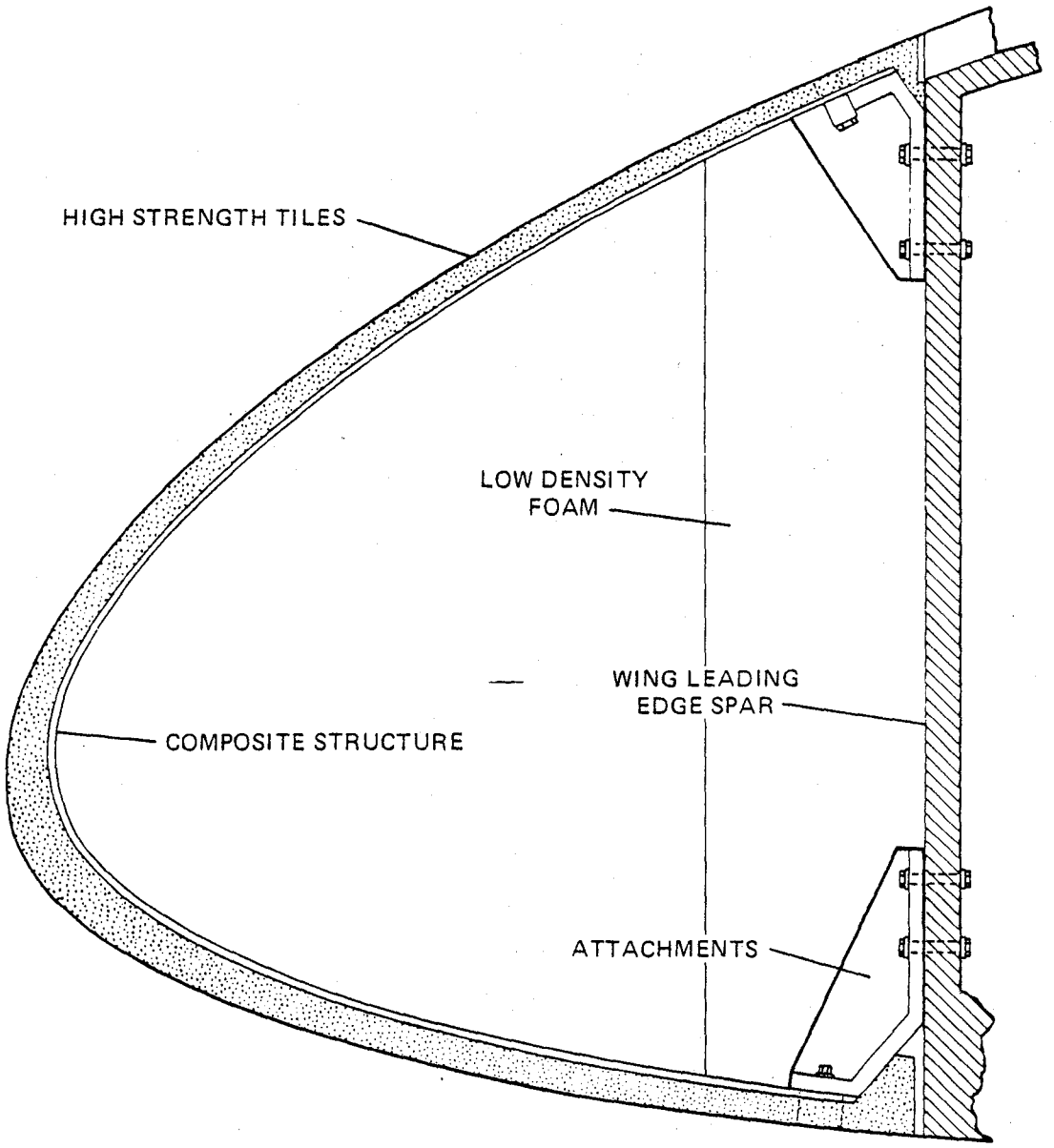

Figure 17.- Advanced leading-edge schematic.

1. Report No.	2. Government Accession No.	3. Recipient's Catalog No.
NASA TM 85941		

4. Title and Subtitle	5. Report Date
Advanced Leading Edge Thermal-Structure Concept: Direct Bond Reusable Surface Insulation to a Composite Structure	March 1984
	6. Performing Organization Code ATP
7. Author(s) S. R. Riccitiello, Hector Figueroa*, C. F. Coe**, and C. P. Kuo***	8. Performing Organization Report No. A-9570
9. Performing Organization Name and Address Ames Research Center, Moffett Field, CA. *Aerospace Corp, Sunnyvale, CA; **Coe Engineering, Los Altos, CA; ***Jet Propulsion Lab, Pasadena, CA	10. Work Unit No. T 4203
	11. Contract or Grant No.
12. Sponsoring Agency Name and Address National Aeronautics and Space Administration Washington DC, 20546	13. Type of Report and Period Covered Technical Memorandum
	14. Sponsoring Agency Code 506-53-31-04-00-21

15. Supplementary Notes

Point of contact: S. R. Riccitiello, Ames Research Center, MS 234-1, Moffett Field, CA (415) 965-6080 or FTS 448-6080

16. Abstract

An analysis for an advanced leading-edge concept was done using the Space Shuttle leading-edge system as a reference model. The comparison indicates that a direct-bond system utilizing a high temperture (2700°F) fibrous refractory composite insulation (FRCI) tile bonded to a high temperature (PI/graphite) composite structure will result in a weight savings of up to 800 lb. A major concern expressed against a leading-edge tile system is that tile damage or loss during ascent would result in adverse entry aerodynamics. This concern, as well as others, was addressed in the study and it was found from experiment that missing tiles (as many as 22) on the leading edge would not significantly affect the basic force-and-moment aerodynamic coefficients. Additionally, this concept affords a degree of redundancy to a thermal protection system in that the base structure (being a composite material) will ablate and not melt or burn through when subjected to entry heating in the event tiles are actually lost or damaged during ascent.

17. Key Words (Suggested by Author(s))	18. Distribution Statement
Space transport systems leading edge; Direct bond reusable surface insulation; Direct bond RSI to composite structure; Advanced RSI insulation system	Unlimited Subject Category: 16

19. Security Classif. (of this report)	20. Security Classif. (of this page)	21. No. of Pages	22. Price*
Uncl.	Uncl.	39	A03

*For sale by the National Technical Information Service, Springfield, Virginia 22161