N 84-29875

12/82 K
oRecon 2/83
6/17/83
8/16/83
10/24/83
1/16/84
2-16-84
5-25-84

NASA CR-168005

# PURDU-WINCOF — A Computer Code for Establishing the Performance of a Fan-Compressor Unit with Water Ingestion


Leonardo, M., Tsuchiya, T. and Murthy, S.N.B.

School of Mechanical Engineering
Purdue University


prepared for

NATIONAL AERONAUTICS AND SPACE ADMINISTRATION


NASA Lewis Research Center
Grant NAG 3-204

| 1. Report No. | 2. Government Accession No. | 3. Recipient's Catalog No. |
|---|---|---|
| NASA CR-168005 | | |

| 4. Title and Subtitle | 5. Report Date |
|---|---|
| PURDU-WINCOF A Computer Code for Establishing the Performance of a Fan-Compressor Unit with Water Ingestion | January, 1982 |
| | 6. Performing Organization Code |
| 7. Author(s) | 8. Performing Organization Report No. |
| Leonardo, M., Tsuchiya, T. and Murthy, S.N.B. | None |
| 9. Performing Organization Name and Address | 10. Work Unit No. |
| Purdue University<br>School of Mechanical Engineering<br>West Lafayette, Indiana 47907 | 11. Contract or Grant No.<br>NAG 3-204 |
| 12. Sponsoring Agency Name and Address | 13. Type of Report and Period Covered<br>Contractor Report |
| National Aeronautics and Space Administration<br>Washington, D.C. 20546 | 14. Sponsoring Agency Code<br>505-32-2A |

15. Supplementary Notes

Final report, Project Manager, Ronald J. Steinke, Fluid Mechanics and Acoustics Division, NASA Lewis Research Center, Cleveland, Ohio 44135

16. Abstract

A model for predicting the performance of a multi-spool axial-flow compressor with a fan during operation with water ingestion has been developed incorporating several two-phase fluid flow effects as follows: (i) ingestion of water, (ii) droplet interaction with blades and resulting changes in blade characteristics, (iii) redistribution of water and water vapor due to centrifugal action, (iv) heat and mass transfer processes and (v) droplet size adjustment due to mass transfer and mechanical stability considerations. A computer program, called the PURDU-WINCOF code, has been generated based on the model utilizing a one-dimensional formulation. An illustrative case serves to show the manner in which the code can be utilized and the nature of the results obtained.

| 17. Key Words (Suggested by Author(s)) | | 18. Distribution Statement |
|---|---|---|
| Compressor off-design<br>Axial-flow compressor<br>Multistage compressor<br>Two phase flow | Water ingestion<br>Water droplets<br>Multi-spool | Unclassified - unlimited<br>STAR Category 07 |

| 19. Security Classif. (of this report) | 20. Security Classif. (of this page) | 21. No. of Pages | 22. Price* |
|---|---|---|---|
| Unclassified | Unclassified | 303 | |

* For sale by the National Technical Information Service, Springfield, Virginia 22161

NASA-C-168 (Rev. 10-75)

# FORWARD

The Report presents the results of a research program carried out at Purdue University under a NASA Grant No. NAG 3-204 awarded by the National Aeronautics and Space Administration, Lewis Research Center, Cleveland, Ohio.

Grateful acknowledgement is made to the Department of Transportation, Federal Aviation Administration, for their support of the research program under Grant Specification Agreement DTFA03-81-A-00152 with the NASA Lewis Research Center.

The authors appreciate the numerous technical discussions held with Mr. R. Steinke (NASA) and Mr. T. Rust (FAA) in the course of this research program.

TABLE OF CONTENTS


| | Page |
|---|---|
| LIST OF FIGURES | vii |
| LIST OF TABLES | ix |
| NOMENCLATURE | xi |
| SUMMARY | xvii |
| CHAPTER I: INTRODUCTION | 1 |
| 1.1 Compressor Utilized for Illustrating the Use of the PURDU-WINCOF Code | 2 |
| 1.2 Outline of the Report | 2 |
| CHAPTER II: OVERALL PROGRAM DESCRIPTION | 3 |
| 2.1 The PURDU-WICSTK Code | 3 |
| 2.2 Modifications Introduced in the PURDU-WINCOF Code | 5 |
| 2.2.1 Modification for Speed | 5 |
| 2.2.2 Modification for Mass Flow | 6 |
| CHAPTER III: SUBROUTINES AND EXTERNAL FUNCTIONS | 7 |
| CHAPTER IV: INPUT DATA | 9 |
| CHAPTER V: OUTPUT | 17 |
| 5.1 Output of Input Data | 17 |
| 5.2 Output of Design Point Performance | 17 |
| 5.2.1 Compressor Inlet (Design Point Performance) | 17 |
| 5.2.2 Stage Performance (Design Point Performance) | 18 |
| 5.2.3 Overall Performance (Design Point Performance) | 19 |

TABLE OF CONTENTS (continued)

Page

5.3 Output of Stage Performance. . . . . 19

5.4 Output of Overall Performance . . . . . 22

5.5 Diagnostic Printout . . . . . 23

CHAPTER VI: TEST CASE . . . . . 25

FIGURES . . . . . 27

LIST OF REFERENCES . . . . . 31

APPENDIX 1: FAN-COMPRESSOR UNIT . . . . . 33

APPENDIX 2: STAGE PERFORMANCE CALCULATION . . . . . 41

APPENDIX 3: DETAILED DESCRIPTION OF SUBROUTINES AND EXTERNAL FUNCTIONS . . . . . 61

APPENDIX 4: PROGRAM SOURCE LIST . . . . . 115

APPENDIX 5: TEST CASE . . . . . .

## LIST OF FIGURES


| Figure | | Page |
|---|---|---|
| 2.1 | Fan-Compressor Unit Streamtubes . . . . . | 28 |
| 4.1 | Geometry of Compressor Stage . . . . . | 29 |
| 4.2 | Angles Associated with a Typical Rotor Blade Element . . . . . | 30 |
| A.2.1 | Typical Velocity Diagram for a Compressor Stage . . . | 43 |
| A.3.1 | Procedure for Prediction of Total Pressure Loss Coefficient and Blade Outlet Flow Angle. . . . . | 69 |
| A.3.2 | Model for Motion of Large Droplet . . . . . | 76 |
| A.3.3 | Control Volume Across a Blade . . . . . | 79 |

## LIST OF TABLES


| Table | | Page |
|---|---|---|
| 6.1 | Operating Conditions for Illustrative Examples . . . . . | 26 |
| A.I.1 | Fan-Compressor Unit Design Data (Stator) . . . . . | 35 |
| A.I.2 | Fan-Compressor Unit Design Data (Rotor). . . . . | 38 |

## NOMENCLATURE

| | |
|---|---|
| $A$ | compressor flow area |
| $A_p$ | droplet project area |
| $a$ | acoustic speed |
| $C_D$ | drag coefficient |
| $C_{D_f}$ | drag coefficient corresponding to loss due to water film formed on blade surface |
| $C_{D_r}$ | drag coefficient corresponding to loss due to rough film surface of water on blade surface |
| $C_w$ | water vapor concentration |
| $C_{wb}$ | water vapor concentration at droplet surface |
| $c$ | blade chord length |
| $c_p$ | specific heat at constant pressure |
| $c_w$ | specific heat of water |
| $c_s$ | humid heat for air-water mixture |
| $D$ | droplet diameter |
| $D_d$ | droplet diameter |
| $D_v$ | diffusivity |
| $D_{eq}$ | equivalent diffusion ratio |
| $D_{eq}^*$ | equivalent diffusion ratio at minimum loss point |
| $d_{max}$ | largest stable droplet diameter |
| $g_c$ | Newton constant relating force and mass |
| HPC | high pressure compressor |
| $h_h$ | heat transfer coefficient |

| | |
|---|---|
| $h_m$ | mass transfer coefficient |
| $i$ | incidence angle |
| $i^*$ | incidence angle at minimum loss point |
| $J$ | constant relating heat and work |
| $K_a$ | thermal conductivity of air |
| $K_d$ | thermal conductivity of gaseous film surrounding an evaporating droplet |
| $K_v$ | thermal conductivity of water vapor |
| $k$ | thermal conductivity |
| $k_g$ | thermal conductivity of gaseous phase |
| LPC | low pressure compressor |
| $M$ | absolute Mach number |
| $M_a$ | assumed value of Mach number |
| $M_r$ | relative Mach number |
| $M_c$ | calculated vlaue of Mach number |
| $\dot{m}$ | mass flow rate |
| $\dot{m}_{film}$ | mass flow rate of water film formed on blade surface |
| mw | molecular weight |
| $N$ | rotor rotational speed |
| $N_d$ | number of droplet |
| Nu | Nusselt number |
| $P_{01}$ | total pressure at rotor inlet |
| $P_{02}$ | total pressure at rotor outlet |
| $P_{03}$ | total pressure at stator outlet |
| $P_{01,r}$ | relative total pressure at rotor outlet |
| $P_{02,r}$ | relative total pressure at rotor outlet |
| $P_{02,ri}$ | ideal relative total pressure at rotor outlet |

| | |
|---|---|
| PR | pressure ratio |
| Pr | Prandtl number |
| $P_{ref}$ | reference pressure |
| $P_1$ | static pressure at rotor inlet |
| $P_2$ | static pressure at rotor outlet |
| $P_3$ | static pressure at stator outlet |
| R | gas constant |
| Re | reynolds number |
| r | radius |
| s | pitch |
| Sc | Schmidt number |
| Sh | Sherwood number |
| SN | stability number |
| T | static temperature |
| $T_o$ | total temperature |
| $T_{ref}$ | reference temperature |
| $T_{01,r}$ | relative total temperature at rotor inlet |
| $T_{o2,r}$ | relative total temperature at rotor outlet |
| TR | temperature ratio |
| $U_{tip}$ | blade tip speed |
| U | blade speed |
| $V_z$ | axial velocity |
| V | absolute velocity |
| $V_\theta$ | tangential component of absolute velocity |
| $V_{film}$ | velocity of film formed on blade surface |
| W | relative velocity |

| | |
|---|---|
| $W_\theta$ | tangential component of relative velocity |
| We | Weber number |
| $x_g$ | mass fraction of gas phase |
| $x_w$ | mass fraction of liquid phase |

Greek Letters

| | |
|---|---|
| $\alpha$ | absolute flow angle |
| $\beta$ | relative flow angle |
| $\beta$ | bypass ratio |
| $\gamma$ | specific heat ratio |
| $\eta$ | aidabatic efficiency |
| $\Delta H_v$ | latent heat of vaporization |
| $\Delta H_0$ | rise in total enthalpy |
| $\Delta T_0$ | rise in total temperature |
| $\Delta T_g$ | rise in overall temperatrue of gaseous phase |
| $(\Delta T_g)_{ht}$ | drop in temperature of gaseous phase due to heat transfer |
| $(\Delta T_g)_{wk}$ | rise in temperature of gaseous phase due to work done |
| $\Delta T_w$ | rise in overall temperature of droplet |
| $(\Delta T_w)_{ht}$ | rise in temperature of droplet due to heat transfer |
| $(\Delta T_w)_{wk}$ | rise in temperature of droplet due to work done |
| $\delta$ | deviation angle |
| $\delta$ | boundary layer displacement thickness |
| $\delta$ | corrected pressure ($\delta=p/p_{ref}$) |
| $\theta$ | boundary layer momentum thickness |
| $\theta$ | corrected temperature ($\theta=T/T_{ref}$) |
| $\mu$ | viscosity |
| $\rho$ | density |

| | |
|---|---|
| $\sigma$ | surface tension of droplet |
| $\sigma$ | solidity |
| $\sigma$ | particulate liquid volume fraction |
| $\tau$ | equivalent temperature ratio |
| $\phi$ | flow coefficient |
| $\psi$ | equivalent pressure ratio |
| $\omega$ | rotor angular velocity |
| $\bar{\omega}$ | total pressure loss coefficient |
| $\bar{\omega}_{g,R}$ | total pressure loss coefficient across rotor due to gas phase |
| $\bar{\omega}_{g,S}$ | total pressure loss coefficient across stator due to gas phase |
| $\bar{\omega}_{\theta,R}$ | total pressure loss coefficient due to the increase of momentum thickness because of the eixstence of small droplets in the boundary layer over a rotor blade surface |
| $\bar{\omega}_{\theta,S}$ | total pressure loss coefficient due to the increase of momentum thickness because of the existence of small droplets in the boundary layer over a stator blade surface |
| $\bar{\omega}_{f,R}$ | total pressure loss coefficient due to the momentum gained by thick water film moving over a rotor blade surface |
| $\bar{\omega}_{f,S}$ | total pressure loss coefficient due to the momentum gained by thick water film moving over a stator blade surface |
| $\bar{\omega}_{r,R}$ | total pressure loss coefficient due to turbulent flow of mixture over the rough film surface of rotor blade |
| $\bar{\omega}_{r,S}$ | total pressure loss coefficient due to turbulent flow of mixture over the rough film surface of stator blade |
| $\bar{\omega}_{s,R}$ | total pressure loss coefficient due to the Stokesian drag of droplets in rotor passage |
| $\bar{\omega}_{s,S}$ | total pressure loss coefficient due to the Stokesian drag of droplets in stator passage |

Subscripts

| | |
|---|---|
| a | pertaining to assumed value |
| c | pertaining to calculated value |
| D | pertaining to design point |
| g | pertaining to gas phase |
| i | pertaining to ideal process |
| l | pertaining to liquid phase |
| m | pertaining to mixture |
| r | pertaining to relative value with respect to rotor |
| ref | pertaining to reference value |
| R | pertaining to rotor |
| S | pertaining to stator |
| w | pertaining to water droplet |
| 0 | pertaining to stagnation value |
| 1 | pertaining to rotor inlet |
| 2 | pertaining to rotor outlet |
| 3 | pertaining to stator outlet |

Superscripts

| | |
|---|---|
| * | pertaining to minimum loss point |
| - | pertaining to average value |

## SUMMARY

A model for predicting the performance of a multi-spool axial-flow compressor with a fan during operation with water ingestion has been developed incorporating several two-phase fluid flow effects as follows: (i) ingestion of water, (ii) droplet interaction with blades and resulting changes in blade characteristics, (iii) redistribution of water and water vapor due to centrifugal action, (iv) heat and mass transfer processes and (v) droplet size adjustment due to mass transfer and mechanical stability considerations. A computer program, called the PURDU-WINCOF code, has been generated based on the model utilizing a one-dimensional formulation. An illustrative case serves to show the manner in which the code can be utilized and the nature of the results obtained.

# CHAPTER I

# INTRODUCTION

Water ingestion into axial flow compressors that have been designed originally for operation with air flow causes considerable changes in performance compared with the performance obtained with air flow (References 1-8). These changes affect the performance, operation and control of an aircraft gas turbine engine when the compressor is part of such an engine (Reference 9).

A model for the prediction of performance of axial-flow compressors has been generated (References 3 and 4) which incorporates the following two-phase flow-associated processes:

(i) ingestion of water;

(ii) droplet interaction with blades and resulting changes in blade characteristics

(iii) redistribution of water and water vapor due to centrifugal action;

(iv) heat and mass transfer processes; and

(v) droplet size adjustment due to mass transfer and mechanical stability considerations.

A numerical-computational program for prediction of compressor performance has been generated, called the PURDU-WICSTK program (Reference 4). It is applicable to a (single spool) compressor with a constant mass flow between the inlet and outlet sections of the unit.

It is of interest to generate a similar numerical-computational procedure for use in the case of a multi-spool compressor with a fan. In this case, the spools generally operate at different speeds and the mass flow in the compressor stages (low pressure compressor, the LPC, and high pressure compressor, the HPC) differs from the mass flow at inlet to the fan depending upon the bypass ratio employed. A computer code

has been designed for this purpose, namely the PURDU-WINCOF code, and the current report is devoted to a description of that code.

## 1.1 Compressor Utilized for Illustrating the Use of the PURDU-WINCOF Code

In order to illustrate the manner in which the PURDU-WINCOF code can be utilized, a typical fan-compressor unit has been chosen. Details regarding the unit are provided in Appendix 1 to this report.

## 1.2 Outline of the Report

A brief description of the PURDU-WINCOF program is provided in Chapter II. The subroutines and external functions of the code are listed in Chapter III. Chapters IV and V provide the details of the input data and the output, respectively. The method of calculation and the nature of the results are illustrated by means of a test case in Chapter VI.

# CHAPTER II

# OVERALL PROGRAM DESCRIPTION

The PURDU-WINCOF program for the prediction of performance of a fan-compressor unit with water injestion is based on the PURDU-WICSTK program (Reference 4) generated for use with a (single spool) constant (mixture) mass flow compressor.

Following a brief description of the PURDU-WICSTK program (Section 2.1), the major modifications introduced in the PURDU-WINCOF program are presented (Section 2.2).

## 2.1 The PURDU-WICSTK Code

The one-dimensional flow equations for two phase flow in axial compressors have been derived in detail and presented in Reference 3. Those equations are suitable for the calculation of performance of any chosen section along the span of an axial compressor blade row. The PURDU-WICSTK code is based on those equations. For given initial conditions at the entry to a stage, the outlet conditions can be calculated using those equations.

The PURDU-WICSTK code deals with a fluid that may consist of (a) a mixture of three different gases and (b) a mixture of two types of water droplets, distinguished by size. The mixture of gases may consist of air and water vapor along with another gas when necessary. The water droplets may be either "small" or "large" diameter droplets or a mixture of small and large droplets. Small droplets are defined as those that follow the gas flow path and hence absorb work input into the compressor along with the gaseous phase. Large droplets are assumed to move largely independently of the gas phase, with equal probability of motion in all directions, and without abosrbing work input but introducing drag losses.

Currently one can only choose the sizes for small and large droplets in an arbitrary fashion; for example if small droplets are assumed to be of mean diameter equal to 10 μm; large droplets may be assigned a mean size of about 1,000 μm in diameter. In a general two-phase mixture that may become the working fluid in a compressor, the proportion of various constituents, namely, different gases (e.g. air and water vapor) and two types of droplets may be chosen as desired in the initial conditions assumed for a calculation. Thus, to consider humid air carrying large droplets, the content of small droplets is set equal to zero while water vapor content is related to humidity.

The performance of a stage of a compressor is based in the PURDU-WICSTK code on five physical models as follows:

(i) model for the calculation of stage performance with respect to the gaseous phase and water droplets;

(ii) model for droplet motion across a blade row from a chosen upstream location to a designated downstream location;

(iii) model for centrifuging of water droplets;

(iv) model for heat and mass transfer processes between the two phases; and

(v) model for droplet break-up and equilibrium with respect to size.

The foregoing five models have been described in detail in References 3 and 4. A further description is included in Appendix 2 of this report regarding the models for the calculation of stage performance with respect to gaseous phase and the air-water droplet mixture.

The performance of a stage is calculated for given initial and operating conditions including the state of the air-water droplet mixture. Regarding droplets, any fraction of their total number may be taken into account depending upon assumptions relating to droplet impingement and rebound processes. Then, at the exit of a blade row, the three major processes, namely (i) centrifugal action on droplets, (ii) heat and mass transfer processes between the two phases and (iii) droplet size adjustment, are taken into account. When the stage performance parameters are "corrected" for the afore-mentioned three processes, one

obtains the final outlet conditions from a stage. The outlet conditions from a stage are modified to account for the geometry of compressor in order to obtain the initial conditions for the next stage, where such exists. Calculations are repeated for subsequent stages based on the well-known concept of stage-stacking. The Code can be used to predict the design point performance as well as off-design performance of a multi-stage compressor.

## 2.2 Modifications Introduced in the PURDU-WINCOF Code

In the fan-compressor unit, with two spools operating at speeds $N_1$ and $N_2$ and with a bypass ratio of $\beta$ the five streamtubes illustrated in Figure 2.1, represent the five typical streamtubes along which it is of interest to establish the fan-compressor performance.

In the one-dimensional formulation adopted in the PURDU-WICSTK and also the PURDU-WINCOF codes, the streamtubes along which the calculations are desired to be performed have to be pre-located in the unit; and their area changes along the flow path have also to be specified on an appropriate basis. Regarding the latter, in most cases, the variation of annulus area of the machine is known at least corresponding to the design point conditions and this variation of area along the flow path may have to be assumed as applicable under off-design conditions. The extent of the resulting errors that arise on account of such assumptions depends upon the nature of the stage aerodynamic characteristics.

The major modifications introduced in the PURDU-WINCOF code consist of the following changes from one stage to the next:

(i) modification for speed changes and

(ii) modification for mass flow changes.

### 2.2.1 Modification for Speed

The operational speeds can be specified by the following input parameters:

FND: rotor rotational speed in Fan

FNDLPC: rotor rotational speed in LPC

FNDHPC: Rotor rotational speed in HPC

NSF: number of stages in Fan

NSLPC: number of stages in LPC

NSHPC: number of stages in HPC

Utilizing those parameters, the operational speed can be set at the desired value for the next stage as follows:

(i) Rotor speed = FND when

$1 \leq \text{stage} \leq \text{NSF}$

(ii) Rotor speed = FNDLPC when

$(\text{NSF} + 1) \leq \text{stage} \leq (\text{NSF} + \text{NSLPC})$

(iii) Rotor speed = FNDHPC when

$(\text{NSF} + \text{NSLPC} + 1) \leq \text{stage} \leq (\text{NSF} + \text{NSLPC} + \text{NSHPC})$

### 2.2.2 Modification for Mass Flow Change

The mass flow rate can be altered at the entry to the next stage. In particular at the entry to the low pressure compressor following the fan stages, the mass flow into the low pressure compressor can be adjusted by utilizing the specified value of bypass ratio, $\beta$, as follows:

$$\dot{m}_C = \dot{m}_F/(1 + \beta)$$

where $\dot{m}_C$ and $\dot{m}_F$ represent the mass flow rate in the fan part and compressor part, respectively.

# CHAPTER III

## SUBROUTINES AND EXTERNAL FUNCTIONS

There are 22 subroutines and 13 external functions in this program. The following is the list of subroutines and external functions. Only brief descriptions of these subprograms are given here. A more detailed description of each subprogram is presented in Appendix 3.

Subroutine WICSPB: calculation of stage performance based on the analytical/correlation method for small droplet.

Subroutine WICSPC: calculation of stage performance based on the analytical/correlation method for large droplet.

Subroutine WICSPD: calculation of design point performance.

Subroutine WICGSL: calculation of single-phase (gas) flow loss.

Subroutine WICSDL: calculation of loss for small droplets on account of the change in momentum thickness of boundary layer due to the presence of such droplets.

Subroutine WICSTL: calculation of loss due to Stokesian drag of droplets in the free stream of blade passage.

Subroutine WICFML: calculation of loss due to film formed on blade surface when large droplets are present either by themselves or along with small droplets.

Subroutine WICRSL: calculation of loss due to the rough surface when large droplets are present either by themselves or along with small droplets.

Subroutine WICCEN: calculation of swanwise replacement of droplets due to centrifugal action.

Subroutine WICDMS: calculation of amount of small droplets which is centrifuged.

Subroutine WICDML: calculation of amount of large droplets which is centrifuged.

Subroutine WICDRG: calculation of drag force on droplet.

Subroutine WICMAC: calculation of Mach number.

Function WICASD: calculation of acoustics speed in two phase flow.

Function WICED: calculation of equivalent diffusion.

Function WICMTK: calculation of dimensionless momentum thickness.

Function WICLOS: calculation of total pressure loss coefficient.

Subroutine WICIRS: calculation of droplet impingement and rebound in rotor for small droplet.

Subroutine WICIRL: calculation of droplet impingement and rebound in rotor for large droplet.

Subroutine WICISS: calculation of droplet impingement and rebound in stator for small droplet.

Subroutine WICISL: calculation of droplet impingement and rebound in stator for large droplet.

Subroutine WICWAK: calculation of water reingestion into wake.

Subroutine WICHET: calculation of heat transfer between gaseous phase and droplets.

Subroutine WICMAS: calculation of mass transfer between gaseous phase and droplets.

Function WICMTR: calculation of mass transfer rate.

Function WICPWB: calculation of vapor pressure.

Function WICNEW: calculation of new trial value in the iterative procedure.

Function WICTAN: calculation of the value of tangent function.

Function WICBPT: calculation of boiling point.

Function WICSH: calculation of specific humidity.

Subroutine WICSIZ: calculation of nominal droplet size.

Subroutine WICPRP: calculation of flow properties for gaseous phase.

Function WICCPA: calculation of specific heat at constant pressure for air.

Function WICCPH: calculation of specific heat at constant pressure for vapor.

Function WICCPC: calculation of specific heat at constant pressure for methane.

# CHAPTER IV

## INPUT DATA

All input data that are needed to utilize the PURDU-WINCOF computer code are described in this section. The input data are presented in the same sequence as they are used in the program. Presently all input data must be in English units unless noted otherwise.

The following is a listing of the input data as they read in MAIN. Figures 4.1 and 4.2 show the geometry of a compressor stage and angles associated with a typical rotor blade element.

| Card No. | Input Data | Comment | Format |
|---|---|---|---|
| 1 | NS | number of stages | I2 |
| 1 | NSF | number of fan stages | I2 |
| 1 | NSLPC | number of low pressure compressor stages | I2 |
| 1 | NSHPC | number of high pressure compressor stages | I2 |
| 2 | RRHUB(I) | hub radius at Ith stage rotor inlet. I = 1 ∿ NS<br>Unit: inch | F5.3 |
| 3 | RC(I) | chord length of Ith stage rotor I = 1 ∿ NS<br>Unit: inch | F5.3 |
| 4 | RBLADE(I) | number of blades for Ith stage rotor. I = 1 ∿ NS | F5.2 |
| 5 | STAGER(I) | stager angle for Ith stage rotor. I = 1 ∿ NS<br>Unit: degree | F5.2 |

| Card No. | Input Data | Comment | Format |
|---|---|---|---|
| 6 | SRHUB(I) | hub radius at Ith stage stator inlet.<br>I = 1 ∿ NS, I = NS + 1 for IGV<br>Unit: inch | F5.3 |
| 7 | SC(I) | chord length of Ith stage stator.<br>I = 1 ∿ NS, I = NS + 1 for IGV<br>Unit: inch | F5.3 |
| 8 | SBLADE(I) | number of blades for Ith stage stator.<br>I = 1 ∿ NS, I = NS + 1 for IGV | F5.2 |
| 9 | STAGES(I) | stager angle for Ith stage stator.<br>I = 1 ∿ NS, I = NS + 1 for IGV<br>Unit: degree | F5.2 |
| 10 | SIGUMR(I) | solidity of Ith stage rotor | F5.3 |
| 11 | SIGUMS(I) | solidity of Ith stage stator<br>I = 1 ∿ NS, I = NS + 1 for IGV | F5.3 |
| 12 | BET2SS(I) | stator outlet absolute flowangle at design pt. for Ith stage.<br>I = 1 ∿ NS, I = NS + 1 for IGV<br>Unit: degree | F5.2 |
| 13 | FNF | fraction of design corrected rotor speed for a particular speed | F8.2 |
| 14 | XDIN | initial water content (mass fraction) of small droplets. | F5.3 |
| 14 | ICENT | index for centrifugal calculation of small droplets.<br>ICENT = 1 when XDIN = 0.0<br>otherwise ICENT = 2<br>ICENT = 3: no heat and mass transfer<br>ICENT = 4: no centrifugal action<br>ICENT = 5: no heat and mass transfer and no centrifugal action<br>ICENT = 6: no mass transfer<br>ICENT = 7: no mass transfer and no centrifugal action | I1 |
| 14 | XDDIN | initial water content (mass fraction) of large droplets. | F5.3 |

| Card No. | Input Data | Comment | Format |
|---|---|---|---|
| 14 | IICENT | index for centrifugal calculation of large droplets.<br>IICENT = 1 when XDDIN = 0.0<br>otherwise IICENT = 2<br>IICENT = 3: no heat and mass transfer<br>IICENT = 4: no centrifugal action<br>IICENT = 5: no heat and mass transfer and no centrifugal action<br>IICENT = 6: no mass transfer<br>IICENT = 7: no mass transfer and no centrifugal action | I1 |
| 14 | ICENTV | index for centrifugal calculation of water vapor<br>ICENTV = 0: vapor is centrifuged<br>ICENTV = 1: vapor is not centrifuged | I1 |
| 15 | TOG | total temperature of gas phase at compressor inlet<br>Unit: Rankine | F7.2 |
| 15 | TOW | temperature of droplet at compressor inlet.<br>Unit: Rankine | F7.2 |
| 15 | PO | total pressure at compressor inlet.<br>Unit: $lbf/ft^2$ | F7.2 |
| 16 | DIN | initial diameter of small droplets.<br>Unit: μm | F6.1 |
| 16 | DDIN | initial diameter of large droplets.<br>Unit: μm | F6.1 |
| 17 | FND | rotor corrected speed at design pt.<br>Unit: RPM | F7.1 |
| 17 | TO1D | compressor inlet temperature at design pt.<br>Unit: Rankine | F7.2 |
| 17 | PO1D | compressor inlet pressure at design pt.<br>Unit: $lbf/in^2$ | F7.2 |
| 17 | FNDLPC | rotor corrected speed of LPC at design pt.<br>Unit: RPM | F7.1 |

| Card No. | Input Data | Comment | Format |
|---|---|---|---|
| 17 | FNDHPC | rotor corrected speed of HPC at design pt.<br>Unit: RPM | F7.1 |
| 18 | XCH4 | initial methane content (mass fraction) | F5.3 |
| 18 | RHUMID | initial relative humidity<br>Unit: percent | F10.5 |
| 19 | FMWA | molecular weight of air | F7.3 |
| 19 | FMWV | molecular weight of steam | F7.3 |
| 19 | FMWC | molecular weight of methane | F7.3 |
| 20 | PREB | percent of water droplets that rebound after impingement on blade surface | F5.1 |
| 20 | DLIMT | maximum diameter for small droplets<br>Unit: μm | F7.1 |
| 21 | GAPR(I) | gap between Ith stage rotor and (I - 1)th stage stator.<br>I = 1 ∿ NS<br>Unit: inch | F7.5 |
| 22 | GAPS(I) | gap between rotor blade and stator blade for Ith stage<br>I = 1 ∿ NS<br>Unit: inch | F7.5 |
| 23 | RRTIP(I) | blade tip radius at Ith stage rotor inlet.<br>I = 1 ∿ NS<br>Unit: inch | F6.3 |
| 24 | SRTIP(I) | blade tip radius at Ith stage stator inlet.<br>I = 1 ∿ NS, I = NS + 1 for IGV<br>Unit: inch | F6.3 |
| 25 | IRAD | index for radius at which calculation is carried out.<br>IRAD = 1: performance at fan tip<br>IRAD = 2: performance at HPC mean<br>IRAD = 3: performance at hub<br>IRAD = 4: performance at tip of HPC and LPC | I1 |

| Card No. | Input Data | Comment | Format |
|---|---|---|---|
| 26 | RT(I) | rotor inlet radius at which tip performance calculation is carried out.<br>I = 1 ∿ NS<br>Unit: inch | F5.3 |
| 27 | RM(I) | rotor inlet radius at which mean line performance calculation is carried out.<br>I = 1 ∿ NS<br>Unit: inch | F5.3 |
| 28 | RH(I) | rotor inlet radius at which hub performance calculation is carried out.<br>I = 1 ∿ NS<br>Unit: inch | F5.3 |
| 29 | ST(I) | stator inlet radius at which tip performance calculation is carried out.<br>I = 1 ∿ NS<br>Unit: inch | F5.3 |
| 30 | SM(I) | stator inlet radius at which mean line performance calculation is carried out.<br>I = 1 ∿ NS<br>Unit: inch | F5.3 |
| 31 | SH(I) | stator inlet radius at which hub performance calculation is carried out.<br>I = 1 ∿ NS<br>Unit: inch | F5.3 |
| 32 | BLOCK(I) | blockage factor for Ith stage rotor.<br>0 < BLOCK(I) < 1<br>I = 1 ∿ NS | F5.3 |
| 33 | BLOCKS(I) | blockage factor for Ith stage stator<br>0 < BLOCKS(I) < 1<br>I = 1 ∿ NS, I = NS + 1 for IGV | F5.3 |
| 34 | IDESIN | index for output.<br>IDESIN = 1: both stage and overall performance printed out<br>IDESIN = 2: only overall performance is printed out | I1 |

| Card No. | Input Data | Comment | Format |
|---|---|---|---|
| 34 | JCENT | index for centrifugal calculation.<br>JCENT = 1: large droplets in rotor free stream are centrifuged in same manner as small droplets.<br>JCENT = 2 (or any other integer): large droplets are taken to have random motion | I1 |
| 35 | BET1MR(I) | blade metal angle at Ith stage rotor inlet.<br>I = 1 ∿ NS<br>Unit: degree | F5.2 |
| 36 | BET2MR(I) | blade metal angle at Ith stage rotor outlet.<br>I = 1 ∿ NS<br>Unit: degree | F5.2 |
| 37 | BET1MS(I) | blade metal angle at Ith stage stator inlet.<br>I = 1 ∿ NS, I = NS + 1 for IGV<br>Unit: degree | F5.2 |
| 38 | BET2MS(I) | blade metal angle at Ith stage stator outlet.<br>I = 1 ∿ NS, I = NS + 1 for IGV<br>Unit: degree | F5.2 |
| 39 | DSMASS | streamtube design mass flow for fan.<br>Unit: lbm/s | F10.6 |
| 39 | BYPASS | bypass ratio at design pt. | F10.6 |
| 40 | PR12D(I) | total pressure ratio for the Ith stage rotor at design pt.<br>I = 1 ∿ NS | F5.3 |
| 41 | PR13D(I) | total pressure ratio for Ith stage at design pt.<br>I = 1 ∿ NS | F5.3 |
| 42 | ETARD(I) | adiabatic efficiency for Ith stage rotor.<br>I = 1 ∿ NS | F5.3 |

| Card No. | Input Data | Comment | Format |
|---|---|---|---|
| 43 | SAREA(I) | stream tube area for Ith stage rotor inlet.<br>I = 1 ∿ NS<br>Unit: $ft^2$ | F10.7 |
| 44 | SAREAS(I) | stream tube area for Ith stage stator inlet.<br>I = 1 ∿ NS, I = NS + 1 for IGV<br>Unit: $ft^2$ | F10.7 |
| 45 | FAI | initial flow coefficient. The user can input as many FAI as one wants. However, each card must contain only one FAI and the last card must be 9.99999. | F7.5 |

Page Intentionally Left Blank

# CHAPTER V

# OUTPUT

There are two kinds of output in this program code: regular output and diagnostic output. The regular output consists of four parts as follows:

(1) output of the inputed data;
(2) output of design point performance;
(3) output of stage performance; and
(4) output of overall performance.

The user can choose the output by setting the value of the input data IDESIN to 1 or 2. By setting IDESIN equal to 1, the detailed output (output of (i) inputed data, (ii) design point performance, (iii) stage performance and (iv) overall performance) can be obtained. On the other hand, the user can obtain the simple output (output of (i) inputed data and (ii) overall performance) by setting IDESIN equal to 2.

## 5.1 Output of Inputed Data

All of the data inputed can be printed out at the beginning of output.

## 5.2 Output of Design Point Performance

### 5.2.1 Compressor Inlet (Design Point Performance)

At the compressor inlet, the following properties can be printed out for the design point performance:

(1) total temperature at compressor inlet: (R)
(2) total pressure at compressor inlet: ($lbf/ft^2$)

(3) static temperature at compressor inlet: (R)
(4) static pressure at compressor inlet: ($lbf/ft^2$)
(5) static density at compressor inlet: ($lbm/ft^3$)
(6) acoustic speed at compressor inlet: (ft/s)
(7) axial velocity at compressor inlet: (ft/s)
(8) Mach number at compressor inlet
(9) stream tube area at compressor inlet: ($ft^2$)
(10) flow coefficient at compressor inlet

### 5.2.2 Stage Performance (Design Point Performance)

At the end of each stage, the following properties can be printed out for the design point performance:

(1) total temperature: (R)
(2) total pressure: ($lbf/ft^2$)
(3) static temperature: (R)
(4) static pressure: ($lbf/ft^2$)
(5) static density: ($lbm/ft^3$)
(6) axial velocity: (ft/s)
(7) absolute velocity: (ft/s)
(8) relative velocity: (ft/s)
(9) tangential component of absolute velocity: (ft/s)
(10) tangential component of relative velocity: (ft/s)
(11) rotor wheel speed: (ft/s)
(12) absolute Mach number
(13) relative Mach number
(14) total temperature based on relative Mach number: (R)
(15) total pressure based on relative Mach number: ($lbf/ft^2$)
(16) absolute flow angle: (degree)
(17) relative flow angle: (degree)
(18) stream tube area: ($ft^2$)
(19) radius at which calculation is carried out: (ft)
(20) flow coefficient
(21) stage total pressure ratio
(22) stage adiabatic efficiency

(23) rotor total pressure ratio
(24) rotor adiabatic efficiency
(25) stage total temperature ratio

### 5.2.3 Overall Performance (Design Point Performance)

After all of stage performance is printed out, the following porperties can be printed out:

(1) compressor inlet total temperature: (R)
(2) compressor inlet total pressure: ($lbf/ft^2$)
(3) corrected mass flow rate: (lbm/s)
(4) overall total pressure ratio
(5) overall total temperature ratio
(6) overall adiabatic efficiency
(7) overall temperature rise: (F)
(8) relative flow angle at rotor inlet: BET1SR(I) (degree)
(9) relative flow angle at rotor outlet: BET2SR(I) (degree)
(10) incidence for rotor: AINCSR(I) (degree)
(11) deviation for rotor: ADEVSR(I) (degree)
(12) absolute flow angle for stator inlet: BET1SS(I) (degree)
(13) absolute flow angle for stator outlet: BET2SS(I) (degree)
(14) incidence for stator: AINCSS(I) (degree)
(15) deviation for stator: ADEVSS(I) (degree)
(16) stage inlet temperature: TD(I) (R)
(17) total pressure loss coefficient for stator: OMEGS(I)
(18) total pressure loss coefficient for rotor: OMEGR(I)
(19) momentum thickness for rotor: SITADR(I)
(20) momentum thickness for stator: SITADS(I)
(21) equivalent diffusion ratio for rotor: DEQR(I)
(22) equivalent diffusion ratio for stator: DEQS(I)

## 5.3 Output of Stage Performance

The performance of a stage is calculated for given initial and operating conditions with respect to the gaseous phase and the water droplets. At the exit of a blade row, the four major processes associated with two phase flow, namely (a) droplet impingement process; (b) centrifugal

action on droplets; (c) heat and mass transfer processes between the two phases; and (d) droplet size adjustment; are taken into account. When the stage performance parameters are corrected for the afore-mentioned four processes, then one obtains the outlet conditions from a stage. The output of stage performance consist of two parts. First the following properties can be printed out before the afore-mentioned four processes are taken into account.

(1) stage total pressure ratio
(2) stage total temperature ratio
(3) stage adiabatic efficiency
(4) stage flow coefficient
(5) axial velocity: (ft/sec)
(6) rotor speed: (ft/sec)
(7) total pressure: ($lbf/ft^2$)
(8) static pressure: ($lbf/ft^2$)
(9) total temperature of gas phase: (R)
(10) static temperature of gas phase: (R)
(11) static density of gas phase: ($lbm/ft^3$)
(12) static density of mixture: ($lbm/ft^3$)
(13) axial velocity: (ft/s)
(14) absolute velocity: (ft/s)
(15) relative velocity: (ft/s)
(16) blade wheel speed: (ft/s)
(17) tangential component of absolute velocity: (ft/s)
(18) tangential component of relative velocity: (ft/s)
(19) acoustic speed: (ft/sec)
(20) absolute Mach number
(21) relative Mach number
(22) flow coefficient
(23) stream tube area: ($ft^2$)
(24) absolute flow angle: (degree)
(25) relative flow angle: (degree)
(26) incidence: (degree)
(27) deviation: (degree)

(28) equivalent diffusion ratio

(29) momentum thickness

(30) pressure loss coefficient of gas only calculation

(31) total pressure loss coefficient

After the stage parameters are corrected for the afore-mentioned four processes, the following second parts of output of stage performance can be printed out.

(1) stage total pressure ratio

(2) stage total temperature ratio

(3) stage adiabatic efficiency

(4) water vapor content: XV

(5) water content of small dorplet: XW

(6) water content of large droplet: XWW

(7) total water content: XWT

(8) mass fraction of dry air: XAIR

(9) mass fraction of methane: XMETAN

(10) mass fraction of gaseous phase: XGAS

(11) mass flow rate of small droplet: WMASS(lbm/s)

(12) mass flow rate of large droplet: WWMASS(lbm/s)

(13) total mass flow rate of droplet: WTMASS(lbm/s)

(14) mass flow rate of dry air: AMASS(lbm/s)

(15) mass flow rate of methane: CHMASS(lbm/s)

(16) mass flow rate of water vapor: VMASS(lbm/s)

(17) mass flow rate of gaseous phase: GMASS(lbm/s)

(18) mass flow rate of mixture: TMASS(lbm/s)

(19) specific humidity: WS

(20) density of air: RHOA($lbm/ft^3$)

(21) density of mixture: RHOM($lbm/ft^3$)

(22) density of gaseous phase: RHOG($lbm/ft^3$)

(23) temperature of gaseous phase: TG (R)

(24) temperature of small droplet: TW (R)

(25) temperature of large droplet: TWW (R)

(26) pressure: P($lbf/ft^2$)

(27) boiling point: TB (R)

(28) dew point: TDEW (R)

## 5.4 Output of Overall Performance

At the end of compressor, the overall performance can be printed out according to the inputed value of IDESIN. If IDESIN=1, the properties to be printed out are as follows:

(1) initial flow coefficient
(2) corrected speed of compressor and fraction of design corrected speed
(3) initial water content of small droplet
(4) initial water content of large droplet
(5) initial total water content
(6) initial relative humidity
(7) initial methane content
(8) compressor inlet total temperature: (R)
(9) compressor inlet total pressure: ($lbf/ft^2$)
(10) corrected mass flow rate of mixture: (lbm/s)
(11) corrected mass flow rate of gaseous phase: (lbm/s)
(12) overall total pressure ratio
(13) overall total temperature ratio
(14) overall adiabatic efficiency

After the foregoing overall performance is printed out, the performance of (i) fan, (ii) low pressure compressor (LPC) and (iii) high pressure compressor (HPC) can be printed out and provide the following:

(1) gas phase corrected mass flow;
(2) total pressure ratio;
(3) total temperature ratio; and
(4) adiabatic efficiency.

If IDESIN=2 the above is printed along with the following:

(1) flow coefficient of stage: FAIO
(2) stage
(3) total pressure ratio of stage: PRATIO
(4) total temperature ratio of stage: TRATIO
(5) adiabatic efficiency of stage: ETA
(6) water vapor content of stage: XV
(7) water content of small droplet: XW

(8) water content of large droplet: XWW

(9) total water content: XWT

(10) temperature of gaseous phase: TG (R)

(11) temperature of water droplet: TW (R)

## 5.5 Diagnostic Printout

At the inlet of each stage, the flow coefficient is calculated. If the flow coefficient gives the value of equivalent pressure ratio which is less than 1.0 or the value of stage adiabatic efficiency which is less than 0.0, the following message will appear: "FAI IS TOO BIG OR TOO SMALL AT STAGE=." If this message appears, the computation for the particular initial flow coefficient will be terminated and the next initial flow coefficient will be read.

The iterative procedure is used to determine the Mach number. If the desired accuracy can not be obtained after 50 times of iteration, the following message will appear: "M DOES NOT CONVERGE AT STAGE=." If this message appears, the final value of Mach number will be used and computation will be continued.

When the axial velocity becomes either higher than local acoustic speed or negative, the following message will appear: "VZ IS TOO HIGH OF TOO LOW." If this message appears, the computation for the particular initial flow coefficient will be terminated and the next initial flow coefficient will be read.

# CHAPTER VI

# TEST CASE

An illustrative example of the use of the PURDU-WINCOF code is presented in this chapter. The fan-compressor unit employed is described in Appendix 1. The operating conditions under which the performance calculation has been carried out are presented in Table 6.1. The outputs obtained from calculations performed along the streamtube no. 4 in Figure 2.1 are presented in Appendix 5.

Table 6.1

Operating Conditions for Illustrative Examples

| Parameter | Values |
|---|---|
| Corrected Speed | 100% Design Speed |
| Inlet Temperature | 518.7 R |
| Inlet Pressure | 14.7 psi |
| Initial Droplet Diameter | 20 μm, 600 μm |
| Humidity | 0.00 |
| Water Content | 0.000 for Test Case No. 1<br>0.010 for Test Case No. 2<br>0.010 for Test Case No. 3<br>but, neglecting mass transfer and only printing overall compressor performance. |
| Flow Coefficient | 0.350 for Test Case Nos. 1, 2<br>0.340 for Test Case No. 3 |

FIGURES

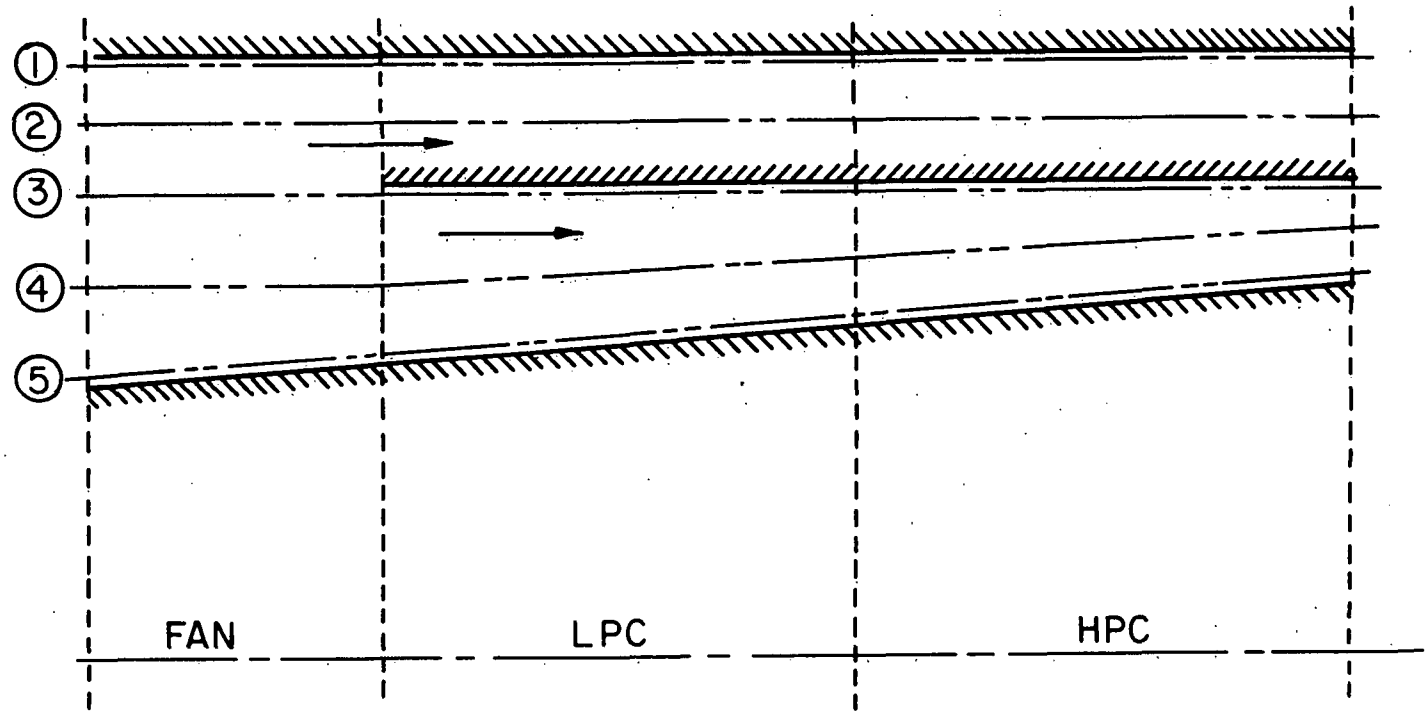


Fig. 2.1. Fan–Compressor Unit Streamtubes

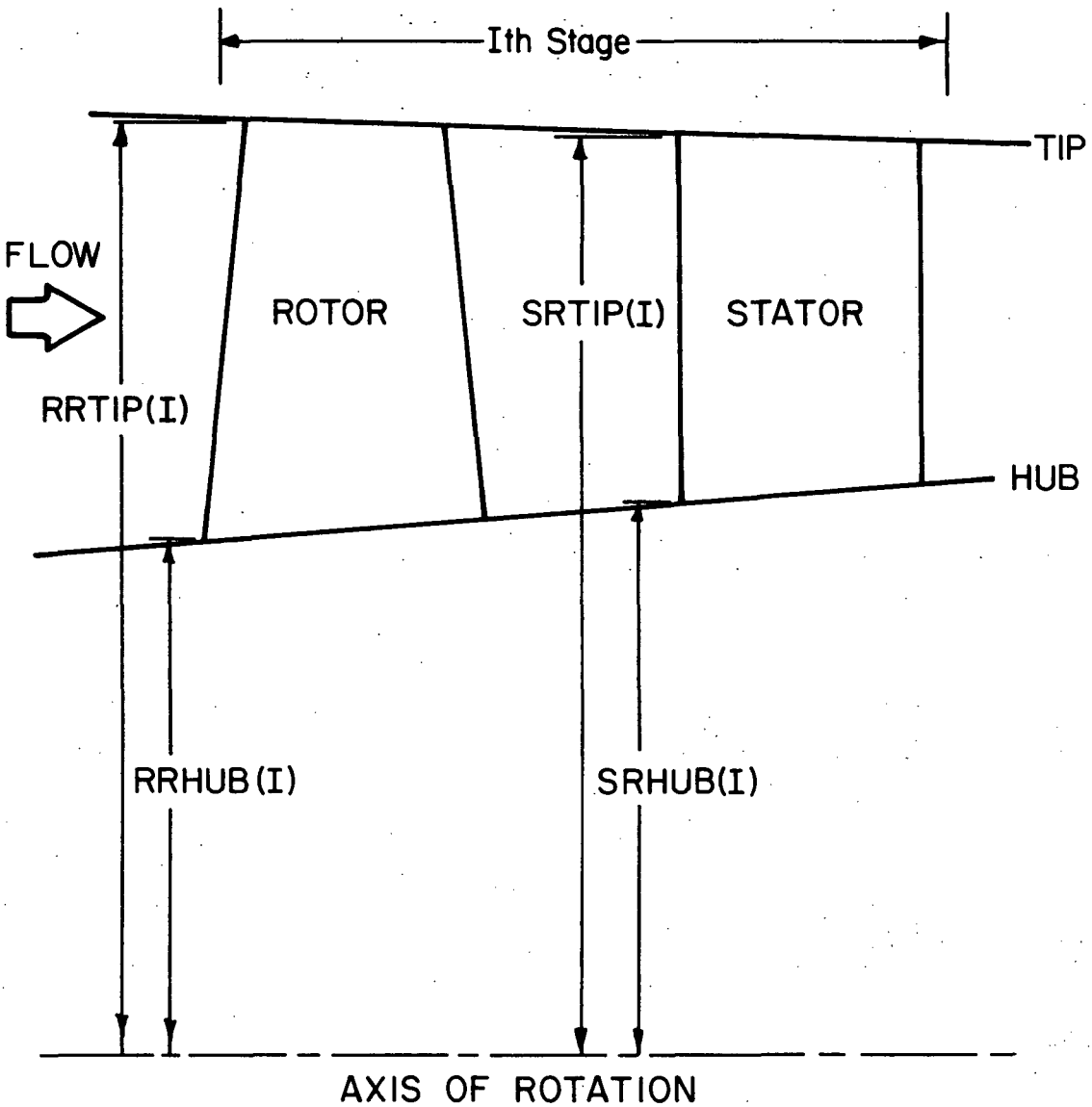


Fig. 4.1 Geometry of Compressor Stage

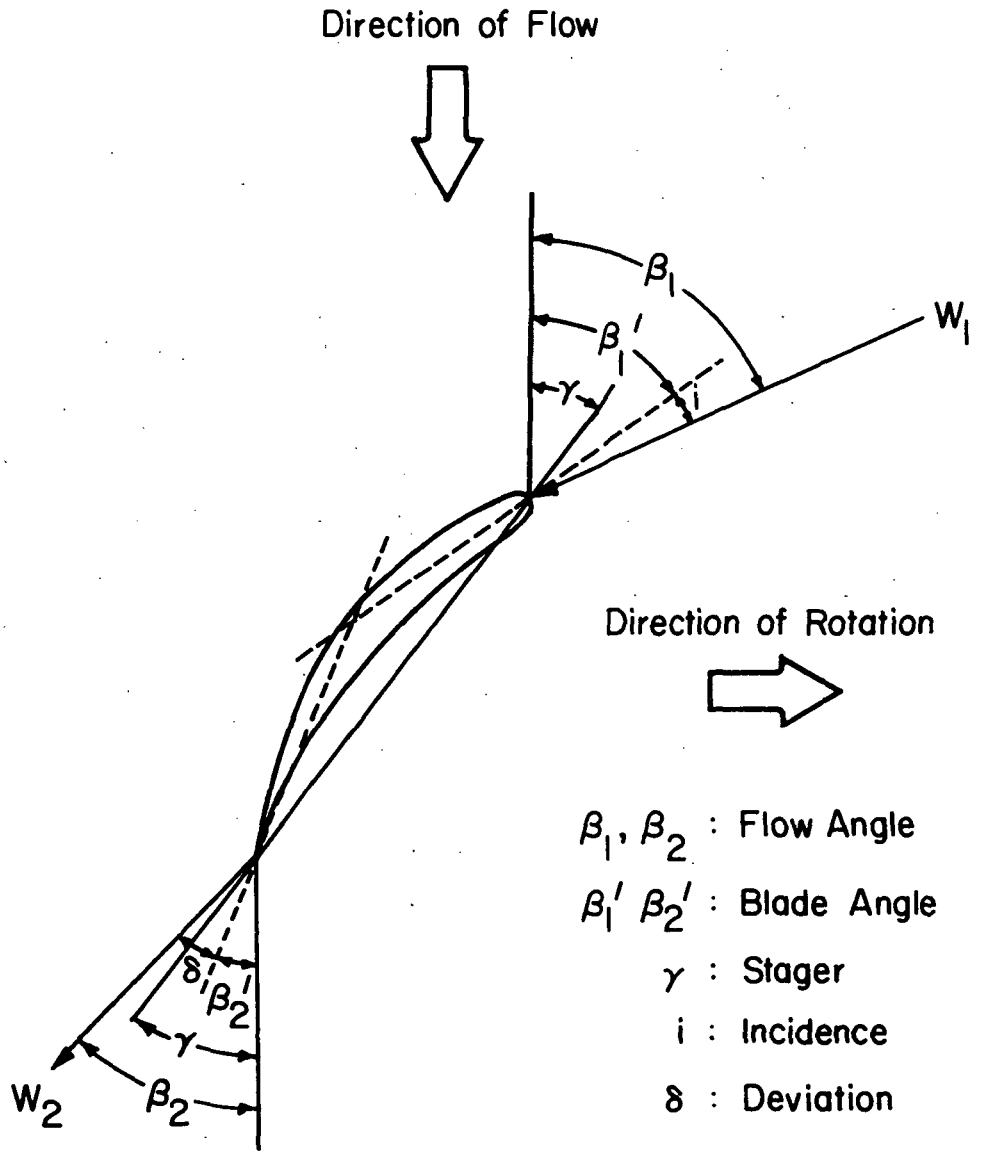


Fig. 4.2 Angles Associated with a Typical Rotor Blade Element

## LIST OF REFERENCES


1. Murthy, S.N.B., et al., "Water Ingestion Into Axial Flow Compressors," Report No. AFAPL-TR-76-77, Air Force Systems Command, Wright-Patterson Air Force Base, August, 1976.
2. Murthy, S.N.B., et al., "Analysis of Water Ingestion Effects in Axial Flow Compressors," Report No. AFAPL-TR-78-35, Air Force Systems Commnad, Wright-Patterson Air Force Base, June, 1978.
3. Tsuchiya, T. and Murthy, S.N.B., "Water Ingestion into Axial Flow Compressors, Part I: Analysis and Predictions" Technical Report AFWAL-TR-80-2090, Air Force Systems Command, Wright-Patterson Air Force Base, Oct. 1980.
4. Tsuchiya, T. and Murthy, S.N.B., "Water Ingestion into Axial Flow Compressors, Part II: Computer Program," Technical Report AFWAL-TR-80-2090, Air Froce Systems Command, Wright-Patterson Air Force Base, Dec. 1980.
5. Murthy, S.N.B., Tsuchiya, T., Ehresman, C.M. and Richards, D., "Water Ingestion into Axial Flow Compressors, Part III: Experimental Results and Discussion," Technical Report AFWAL-TR-80-2090, Air Force Systems Command, Wright-Patterson Air Force Base, July 1981.
6. Tsuchiya, T., "Aerothermodynamics of Axial-Flow Compressors with Water Ingestion," Ph.D. Dissertation at Purdue University, May 1982.
7. Tsuchiya, T. and Murthy, S.N.B., "Model for Axial Compressors Operating with Air Water Ingestion," Conference Papers on 5th International Symposium on Air Breathing Engines, pp. 78-1 to 78-10, Feb. 1981.
8. Tsuchiya, T. and Murthy, S.N.B., "Water Ingestion into Jet Engine Axial Compressors," AIAA Paper No. 82-0196, AIAA 20th Aerospace Science Conference, Orlando, Florida, Jan. 11-14, 1982.

9. (a) "Concorde Complete Flooded Runway Tests," Aviation Week and Space Technology, p. 22, October 4, 1971.
   (b) "Board Assays Crash of DC-9 in Storm," Ibid, pp. 63-67, July 24, 1978.
   (c) "Storm Traced in Southern DC-9 Crash," Ibid, pp. 59-61, July 31, 1978.
   (d) "Damage Assessed in Southern Crash," Ibid, pp. 59-63, August 7, 1978.
   (e) "Thrust Loss Cited in Southern Accident," Ibid, pp. 55-58, August 21, 1978.
   (f) "Board Urges Imporved Thunderstorm Reporting," Ibid, pp. 63-64, August 28, 1978.
   (g) "NTSB Cites Weather Data in Accident," Ibid, pp. 66-70, July 27, 1981.
10. Liebleim, S., "Loss and Stall Analysis of Compressor Cascades," Jr. of Basic Engineering, Transaction of the ASME, September, 1959.
11. Swan, W.C., "A Practical Method of Predicting Transonic-compressor Performance," Jr. of Engineering, Transaction of the ASME, July 1961.
12. Soo, S.L., "Boundary Layer Motion of a Gas-Solids Suspension," Proceedings of Interaction Between Fluids and Particles, pp. 50-63, Instn. Chem. Engrs., London, October, 1961.
13. Schlichting, H., Boundary-Layer Theory, McGraw-Hill Book Co. Inc., New York, 1955.
14. Collier, J.G. and Wallis, G.B., Two-Phase Flow and Heat Transfer, Vol. II, pp. 405, Dept. of Mechanical Engineering, Stanford University, Palo Alto, California, 1967.
15. Holman, J.P., Heat Transfer, p. 427, McGraw-Hill, New York, 1976.
16. Rantz, W.E. and Marshall, W.R., Chem. Eng. Prog., Vol. 48, No. 3, p. 141, 1951.
17. Zucrow, M.J. and Hoffman, J.D., Gas Dynamics, Vol. I, pp. 55-57, John Wiley & Sons, New York, 1976.

# APPENDICES

## APPENDIX 1

### Fan-Compressor Unit

A fan-compressor unit with a fan, a low pressure compressor and a high pressure compressor has been chosen for the purpose of demonstrating the application of the PURDU-WINCOF Code. The overall design features fo the unit are as follows.

| | |
|---|---|
| Number of stages: | 3 (Fan); 6 (LPC); and 7 (HPC) |
| Design speed: | 9492.1 RPM (Fan and LPC)<br>14095.5 RPM (HPC) |
| Design mass flow: | 255.0 lbm/sec |
| Design pressure ratio: | 2.1948 (Fan); 2.6365 (LPC); and 2.9823 (HPC) |

The basic design data are provided in Tables A.I.1 and A.I.2.

Table A.I.1

Fan-Compressor Unit Design Data

Stators

The values given pertain to the mean section of the LPC and the HPC.

FAN

| Stage | Hub Radius | Number of Blades | Design absolute inlet flowangle ($\alpha_2^*$) | Design absolute outlet flowangle ($\alpha_3^*$) |
|---|---|---|---|---|
| IGV | 6.220 | 60 | 0.00 | 6.69 |
| 1 | 6.650 | 60 | 37.07 | 6.21 |
| 2 | 6.965 | 60 | 36.40 | -1.49 |
| 3 | 7.025 | 60 | 27.17 | 0.38 |

Note: r in inches and $\alpha$ in degrees

Table A.I.1 (continued)

LPC

| Stage | Hub Radius | Number of Blades | Design Absolute inlet flowangle ($\alpha_2^*$) | Design Absolute outlet flowangle ($\alpha_3^*$) |
|---|---|---|---|---|
| 4 | 7.025 | 60 | 26.78 | 8.86 |
| 5 | 7.025 | 60 | 26.38 | 1.41 |
| 6 | 7.025 | 60 | 32.68 | 6.55 |
| 7 | 7.025 | 60 | 28.41 | 5.24 |
| 8 | 7.025 | 60 | 37.70 | 16.23 |
| 9 | 7.130 | 60 | 36.82 | 16.50 |

Note: r in inches and $\alpha$ in degrees

Table A.I.1 (concluded)

HPC

| Stage | Hub Radius | Number of Blades | Design absolute inlet flowangle ($\alpha_2^*$) | Design absolute outlet flowangle ($\alpha_3^*$) |
|---|---|---|---|---|
| 10 | 7.449 | 60 | 36.41 | 22.78 |
| 11 | 7.674 | 60 | 41.62 | 24.28 |
| 12 | 7.873 | 60 | 42.63 | 25.79 |
| 13 | 8.053 | 60 | 41.94 | 23.93 |
| 14 | 8.201 | 60 | 44.03 | 20.90 |
| 15 | 8.311 | 60 | 38.84 | 16.87 |
| 16 | 8.378 | 60 | 40.40 | 3.03 |

Note: r in inches and $\alpha$ in degrees

Table A.I.2

Fan-Compressor Unit Design Data

Rotors

The values given pertain to the mean section of the LPC and the HPC.

FAN

| Stage | Hub Radius | Number of Blades | Design relative inlet flowangle ($\beta_1^*$) | Design relative outlet flowangle ($\beta_2^*$) |
|---|---|---|---|---|
| 1 | 6.300 | 60 | 52.88 | 40.40 |
| 2 | 6.830 | 60 | 55.61 | 42.36 |
| 3 | 7.020 | 60 | 56.07 | 37.73 |

Note: r in inches and $\beta$ in degrees

Table A.I.2 (continued)

LPC

| Stage | Hub Radius | Number of Blades | Design relative inlet flowangle ($\beta_1^*$) | Design relative outlet flowangle ($\beta_2^*$) |
|---|---|---|---|---|
| 4 | 7.025 | 60 | 45.92 | 29.71 |
| 5 | 7.017 | 60 | 39.94 | 26.76 |
| 6 | 7.037 | 60 | 45.69 | 25.64 |
| 7 | 7.025 | 60 | 43.01 | 24.73 |
| 8 | 7.025 | 60 | 42.23 | 15.25 |
| 9 | 7.025 | 60 | 35.14 | 16.06 |

Note: r in inches and $\beta$ in degrees

Table A.I.2 (concluded)

HPC

| Stage | Hub Radius | Number of Blades | Design relative inlet flowangle ($\beta_1^*$) | Design relative outlet flowangle ($\beta_2^*$) |
|---|---|---|---|---|
| 10 | 7.308 | 60 | 49.52 | 37.92 |
| 11 | 7.553 | 60 | 48.02 | 33.59 |
| 12 | 7.757 | 60 | 48.34 | 33.90 |
| 13 | 7.956 | 60 | 47.78 | 36.39 |
| 14 | 8.123 | 60 | 50.02 | 36.92 |
| 15 | 8.258 | 60 | 54.16 | 45.10 |
| 16 | 8.351 | 60 | 56.34 | 45.48 |

Note: r in inches and $\beta$ in degrees

## APPENDIX 2

## STAGE PERFORMANCE CALCULATION

In the PURDU-WINCOF code, the calculation of stage performance is carried out through the estimation of work done and losses in a stage based on an analytical model. The stage performance calculation being discussed here pertains only to establishing the stage work done, and the consequent temperature and pressure rise, and the stage losses as they occur between the leading and trailing edges of a blade. The final exit conditions from a stage are established after ocrrecting the stage outlet conditions for various two phase flow effects.

In calculating the stage performance, it is necessary to take into account the presence of droplets in the fluid, and their motion, particularly their impact on the blades, Such impaction leads to the formation of a film on the blade surface, composed of water from unrebounded droplets, and a change in the boundary layer and separation characteristics. Thus, the stage characteristics become different for a droplet-laden gas flow from those for a single phase gas. The change in stage characteristics arises through modification of (a) momentum thickness of boundary layer, (b) diffusion factor and (c) deviation angle.

It may be stated at the outset than no correlations of compressor, cascade or even single airfoil performance data are available for two phase flow. It is therefore necessary to model compressor flow based on a number of approximations, in turn related to physical process models.

In order to account for various drop sizes that may arise in a spray, it has been suggested that two classes of droplets be identified, one referred to as "small" and the other as "large." In adjusting droplet sizes for any reason, it is assumed that samll droplets may only remain small, while large droplets may become small enough to belong to the small droplet class. From the point of view of blade passage flow, the

principal distinction between small and large droplets is, as has been mentioned earlier, that small droplets are sufficiently small and follow the gas phase streamlines/ but large droplets, which are in order of about 100 μm in diameter, are assumed to have equal probability of motion in all directions in the forward sector. In addition, it is assumed that only small droplets may absorb part of the work input. Other distinctions between the two classes of droplets arise from the foregoing and are taken into account in developing compressor flow models for the two classes of droplets.

In order to simplify calculations of stage losses, three procedures have been developed as follows:

(1) procedure when the compressor operates with a single (gas) phase;

(2) procedure when only small droplets are present; and

(3) procedure when large droplets are present either by themselves or along with small droplets.

Typical velocity diagram for an axial compressor stage is presented in Fig. A.2.1.

### A.2.1 Procedure of Gas Phase Operation

The stage performance calculation for gas phase operation is carried out using the analytical/correlation method based on References 10 and 11 as follows:

(1) From given inlet conditons or the previous stage exit conditions, the total temperature, $T_{01}$, and total pressure, $P_{01}$, are obtained.

(2) Calculate specific heat ratio corresponding to the temperature.

(3) Calculate the stagnation density.

$$\rho_{01} = P_{01}/RT_{01}$$

(4) Assume a value for Mach number, $M_a$.

(5) Calculate the static density and temperature.

$$\rho_1 = \left\{1 + (\gamma-1)M_a^2/2\right\}^{-1/(\gamma-1)} \rho_{01}$$

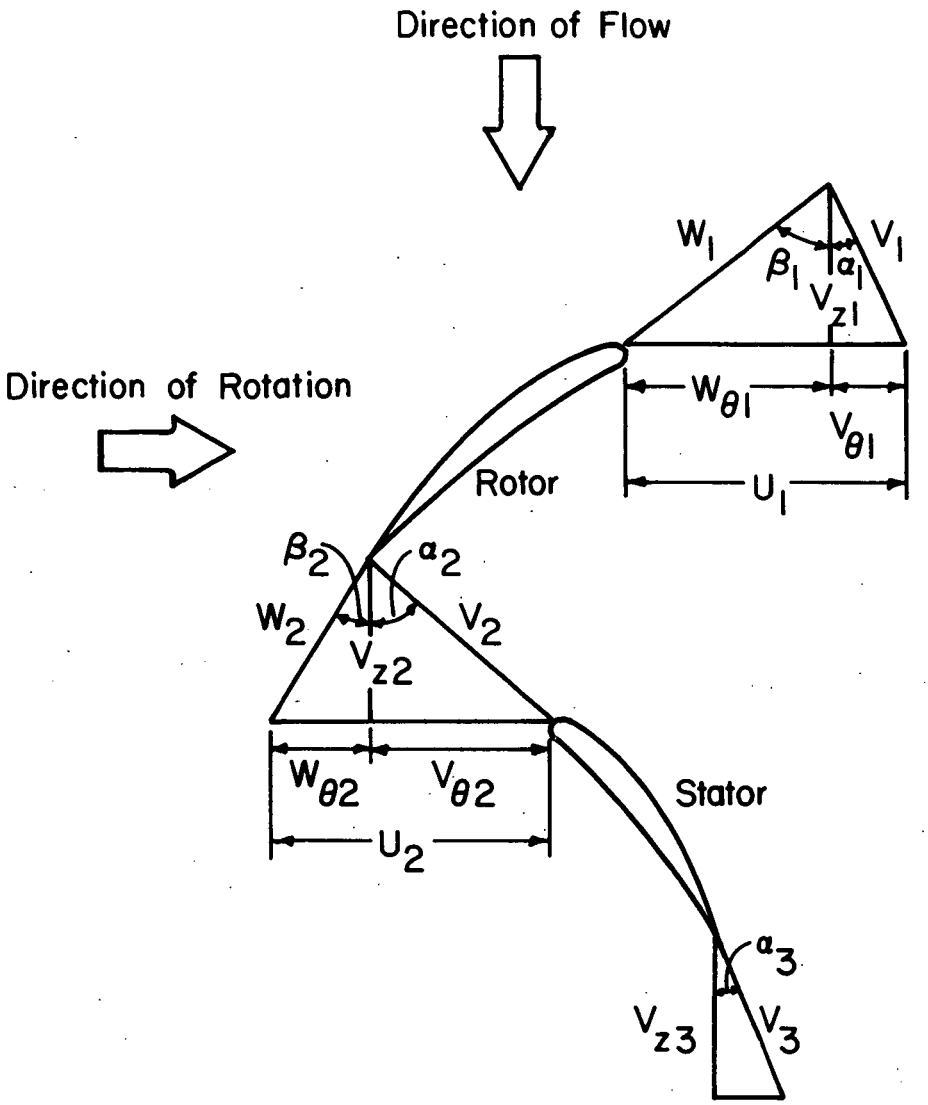


Fig. A.2.1 Typical Velocity Diagram for a Compressor Stage

$$T_1 = \left\{1 + (\gamma-1)M_a^2/2\right\}^{-1} \quad T_{01}$$

(6) Calculate the acoustic speed.

$$a_1 = (\gamma R T_1 \; g_c)^{0.5}$$

(7) Calculate the axial velocity.

$$V_{z1} = \dot{m}/\rho_1 \; A_1$$

(8) Calculate the absolute velocity.

$$V_1 = V_{z1}/\cos \alpha_1$$

(9) Calculate the Mach number, $M_c$.

$$M_c = V_{z1}/a_1$$

(10) Compare the assumed value of Mach number, $M_a$, with the calculated one, $M_c$. If $M_a$ agrees within prescribed limits with $M_c$, proceed to the next step. Otherwise, steps (4) to (9) must be repeated.

(11) Calculate the components of velocity from the velocity diagram at rotor inlet as follows:

$$V_1 = V_{z1}/\cos \alpha_1$$

$$V_{\theta 1} = V_{z1} \tan \alpha_1$$

$$W_{\theta 1} = U_1 - V_{\theta 1}$$

$$W_1 = (V_{z1}^2 + W_{\theta 1}^2)^{0.5}$$

$$\beta_1 = \tan^{-1}(W_{\theta 1}/V_{z1})$$

(12) Calculate relative Mach number at rotor inlet.

$$M_{r1} = W_1/a_1$$

(13) Calculate static pressure at rotor inlet.

$$p_1 = \left\{(T_{01}/T_1)\right\}^{-\gamma/(\gamma-1)} \cdot P_{01}$$

(14) Calculate total pressure at rotor inlet based on the relative Mach number, $M_r$.

$$P_{01,r} = 1 + (\gamma-1)M_{r1}^2/2 \quad {}^{\gamma/(\gamma-1)} \cdot P_1$$

(15) Assume $V_{z2}$ to calculate the total pressure loss coefficient across rotor and rotor outlet flow angle.

(16) Calculate the components of velocity at rotor outlet as follows:

$$W_{\theta 2} = V_{z2} \tan \beta_2$$

where $\beta_2$ is an input value at the design point, or is calculated according to the procedure given in Appendix 3, Subroutine WICGSL.

---

$$V_{\theta 2} = U_2 - W_{\theta 2}$$

$$W_2 = (V_{z2}^2 + W_{\theta 2}^2)^{0.5}$$

$$V_2 = (V_{z2}^2 + V_{\theta 2}^2)^{0.5}$$

$$\alpha_2 = \tan^{-1}(V_{\theta 2}/V_{z2})$$

(17) Calculate the total temperature at rotor outlet.

$$T_{02} = T_{01} + (U_2 V_{\theta 2} - U_1 V_{\theta 1})/c_p g_c J$$

(18) Calculate static temperature at rotor outlet.

$$T_2 = T_{02} - V_2^2/2c_p g_c J$$

(19) Calculate acoustic speed at rotor outlet.

$$a_2 = (\gamma R T_2 g_c)^{0.5}$$

(20) Calculate absolute and relative Mach number at rotor outlet.

$$M_2 = V_2/a_2$$

$$M_{r2} = W_2/a_2$$

(21) Calculate total pressure loss factor across rotor.

$$\frac{P_{02,r}}{P_{01,r}} = \frac{P_{02,ri}}{P_{01,r}} - \bar{\omega}_R \left(1 - \frac{P_{1,r}}{P_{01,r}}\right)$$

where

$$\frac{P_{02,ri}}{P_{01,r}} = \left(\frac{T_{02,r}}{T_{01,r}}\right)^{\frac{\gamma}{\gamma-1}}$$

$$= \left\{1 + \frac{\gamma-1}{2} \frac{U_2^2}{RT_{01,r}} \left[1 - \left(\frac{r_1}{r_2}\right)\right]^2\right\}^{\frac{\gamma}{\gamma-1}}$$

(22) Calculate total pressure ratio across rotor, and total and static pressure at rotor outlet.

$$\frac{P_{02}}{P_{01}} = \left(\frac{T_{02}}{T_{01}}\right)^{\frac{\gamma}{\gamma-1}} \cdot \left(\frac{P_{02,r}}{P_{01,r}}\right) \cdot \left(\frac{P_{02,ri}}{P_{01,r}}\right)^{-1}$$

$$P_{02} = \left(\frac{P_{02}}{P_{01}}\right) P_{01}$$

$$P_2 = \left(1 + \frac{\gamma-1}{2} M_2^2\right)^{-\gamma/(\gamma-1)} \cdot P_{02}$$

(23) Calculate density at rotor outlet.

$$\rho_2 = P_2/RT_2$$

(24) Calculate the axial velocity at rotor outlet.

$$V_{z2} = \dot{m}/\rho_2 A_2$$

(25) Compare the calculated value of $V_{z2}$ in (24) with the assumed $V_{z2}$ in (15). Iterate steps (15) to (24) until a desired accuracy is obtained.

(26) Calculate total pressure at rotor outlet.

$$P_{02} = 1 + (\gamma - 1)M_2^2/2 \quad {}^{\gamma/(\gamma-1)} \cdot p_2$$

(27) Calculate the total pressure loss coefficient across stator, $\bar{\omega}_s$, and stator outlet angle $\alpha_3$, in a similar fashion as in the rotor case.

(28) Calculate total pressure loss factor across stator.

$$\frac{P_{03}}{P_{02}} = 1 - \bar{\omega}_s \left(1 - \frac{P_2}{P_{02}}\right)$$

(29) Calculate the total pressure ratio and total temperature ratio across the stage.

$$PR = \frac{P_{03}}{P_{01}} = \left(\frac{T_{03}}{T_{01}}\right)^{\frac{\gamma}{\gamma-1}} \cdot \left(\frac{P_{02,r}}{P_{01,r}}\right) \cdot \left(\frac{P_{02,ri}}{P_{01,r}}\right)^{-1} \cdot \left(\frac{P_{03}}{P_{02}}\right)$$

$$TR = T_{03}/T_{01}$$

(30) Obtain total pressure and temperature at stator outlet.

$$P_{03} = \left(\frac{P_{03}}{P_{02}}\right) \cdot P_{02}$$

$$T_{03} = T_{02}$$

(31) Calculate the average value of specific heat ratio.

(32) Calculate the stage efficiency.

$$\eta = \frac{PR^{(\gamma-1)/\gamma} - 1}{TR - 1}$$

### A.2.2 Procedure when Small Droplets are Present

When all of the droplets present at entry to a stage can be categorized as small droplets, the following assumptions are introduced.

(1) Droplets follow gas phase streamlines.

(2) A fraction of the droplets impacting the blades undergo rebound. The balance of impacting droplets move over the blade surface in the form of a thin film. The momentum of the thin film is negligible.

(3) The development of the boundary layer over the blade surface can be based on Reference 12. The following assumptions are made in that Reference: (i) droplets do not interact with one another; (ii) a two phase boundary layer exists; and (iii) the momentum thickness for the two phases can be superposed after they are obtained in two parts.

(4) The deviation angle remains the same in two phase flow as in single phase flow. The reasoning is that diffusion and transport of particles can be neglected as being small and, in any case, as balancing each other.

(5) The loss coefficient for two phase flow is thus the sum of the loss coefficient for each pahse. The loss coefficient for the liquid phase may also be added in an appropriate form to the stage efficiency for a stage obtained during operation with air in order to obtain the stage efficiency for two phase flow.

(6) Considering a blade passage flow, between two neighboring blades, away from solid boundaries, the drag due to droplets can be calculated assuming Stokes drag relation. The number of droplets suffering such drag is the sum of the number of non-impacting droplets and the number of rebound droplets.

(7) The overall loss is obtained by adding the losses described under (5) and (6).

In using the analytical/correlation method for the flow of a mixture with small droplets, the basic procedure is the same as the procedure utilized in gas phase operation (Section A.2.1). The pressure rise for the gas phase and the temperature rise of water are determined from the

mixture turning angle over a blade. The losses are established based on (a) the relation between the loss coefficient and the pressure loss; the loss coefficient in turn related to the momentum thicknesses of the blade boundary layer due to the gas phase and the droplets; and (b) the Stokesian drag of droplets in the free stream. The latter, of course, is zero for small droplets, by definition.

The stage performance calculation for a mixture with small droplets is carried out using the analytical/correlation method as follows:

(1) From the given inlet condition or the previous stage properties, the gas phase total temperature, $T_{01,g}$, and total pressure, $P_{01,g}$ are obtained.

(2) Calculate the gas constant, $R_g$, specific heat constant pressure, $c_{pg}$ and specific heat ratio of gas phase, $\gamma$.

(3) Calculate the stagnation density of gas phase.

$$\rho_{01,g} = P_{01}/R_g\ T_{01,g}$$

(4) Assume a value for Mach number, $M_a$.

(5) Calculate the static density and temperature of gas phase.

$$\rho_{g1} = \left[1 + (\gamma - 1)M_{a2}^2/2\right]^{-1/(\gamma-1)} \cdot \rho_{01,g}$$

$$T_{g1} = \left[1 + (\gamma - 1)M_a^2/2\right] \cdot T_{01,g}$$

(6) Calculate the acoustic speed in the gas phase $a_{g1}$.

$$a_{g1} = (\gamma\ R_g\ T_{g1}\ g_c)^{0.5}$$

(7) Calculate the acoustic speed in the mixture, $a_1$, as shown in Appendix 3, Function WICASD.

(8) Calculate the density of the mixture.

$$\rho_m = \left(\frac{x_g}{\rho_g} + \frac{x_w}{\rho_w}\right)^{-1}$$

(9) Calculate the axial velocity.

$$V_{z1} = \dot{m}_m/\rho_1 A_1$$

(10) Calculate the absolute velocity.

$$V_1 = V_{z1}/\cos \alpha_1$$

(11) Calculate the Mach number, $M_c$.

$$M_c = V_1/a_1$$

(12) Compare the assumed Mach number, $M_a$, with the calculated one, $M_c$. If $M_a$ agrees within prescribed limits with $M_c$, proceed to the next step. Otherwise, steps (4) to (11) must be repeated.

(13) Calculate the components of velocity at rotor inlet as follows:

$$V_1 = V_{z1}/\cos \alpha_1$$
$$V_{\theta 1} = V_{z1}/\tan \alpha_1$$
$$W_{\theta 1} = U_1 - V_{\theta 1}$$
$$W_1 = (V_{z1}^2 + W_{\theta 1}^2)^{1/2}$$
$$\beta_1 = \tan^{-1}(W_{\theta 1}/V_{z1})$$

(14) Calculate relative Mach number at rotor inlet.

$$M_{r1} = W_1/a_1$$

(15) Calculate static pressure at rotor inlet.

$$p_1 = \left(T_{01,g}/T_{g1}\right)^{-\gamma/(\gamma-1)} \cdot P_{01}$$

(16) Calculate total pressure at rotor inlet based on the relative Mach number, $M_{r1}$.

$$P_{01,r} = \left[1 + (\gamma - 1)M_{r1}/2\right]^{\gamma/(\gamma-1)} \cdot p_1$$

(17) Assume $V_{z2}$ to calculate the total pressure loss coefficient across rotor due to gas phase, $\bar{\omega}_{g,R}$, and rotor outlet angle $\beta_2$, where $\beta_2$ is calculated according to the procedure given in Appendix 3, Subroutine WICGSL.

(18) Obtain the total pressure loss coefficient due to the increase of momentum thickness because of the existence of small droplets in the boundary layer over a rotor blade surface $\bar{\omega}_{\theta,R}$, as shown in Appendix 3, Subroutine WICSDL.

(19) Obtain the total pressure loss across rotor due to the Stokesian drag of water droplets outside boundary layer $\bar{\omega}_{s,R}$, as shown in Appendix 3, Subroutine WICSTL.

(20) Calculate the components of velocity at rotor outlet as follows:

$$W_{\theta 2} = V_{z2} \tan \beta_2$$

$$V_{\theta 2} = U_2 - W_{\theta 2}$$

$$W_2 = (V_{z2}^2 + W_{\theta 2}^2)^{0.5}$$

$$V_2 = (V_{z2}^2 + V_{\theta 2}^2)^{0.5}$$

$$\alpha_2 = \tan^{-1}(V_{\theta 2}/V_{z2})$$

(21) Calculate the work input.

$$\Delta H_0 = (U_2 V_{\theta 2} - U_1 V_{\theta 1})/g_c J$$

(22) Apportion work input to the mixture constituents as described in item (14) of A.2.2.1 of Reference (4).

(23) Calculate static temperature of gas phase at rotor outlet.

$$T_{g2} = T_{02,g} - V_2^2/c_{pg}\, g_c\, J$$

(24) Calculate acoustic speed in gas phase.

$$a_{g2} = (\gamma\, R_g\, T_{g2}\, g_c)^{0.5}$$

(25) Assume $\rho_{g2} = \rho_{g1}$ and calculate the acoustic speed in the mixture, $a_2$, as shown in Appendix 3, Function WICASD.

(26) Calculate absolute and relative Mach numbers at rotor outlet.

$$M_2 = V_2/a_2$$

$$M_{r2} = W_2/a_2$$

(27) Calculate total pressure loss factor across rotor.

$$\frac{P_{02,r}}{P_{01,r}} = \frac{P_{02,ri}}{P_{01,r}} - (\bar{\omega}_{g,R} + \bar{\omega}_{\theta,R} + \bar{\omega}_{s,R}) \cdot \left(1 - \frac{P_1}{P_{01,r}}\right)$$

(28) Calculate total pressure ratio across rotor, and total and static pressures at rotor outlet.

$$\frac{P_{02}}{P_{01}} = \left(\frac{T_{02,g}}{T_{01,g}}\right)^{\frac{\gamma}{\gamma-1}} \cdot \left(\frac{P_{02,r}}{P_{01,r}}\right) \cdot \left(\frac{P_{02,ri}}{P_{o1,r}}\right)^{-1}$$

$$P_{02} = \left(\frac{P_{02}}{P_{01}}\right) P_{01}$$

$$P_2 = \left(1 + \frac{\gamma - 1}{2} M_2^2\right)^{\frac{-\gamma}{\gamma-1}} P_{02}$$

(29) Calculate static density at rotor outlet.

$$\rho_{g2} = P_2/R_g T_{g2}$$

(30) Compare the calculated value of $\rho_{g2}$ in (29) with the assumed value of $\rho_{g2}$ in (25). Iterate steps (25) to (29) until a desired accuracy is obtained.

(31) Calculate the density of mixture at rotor outlet.

$$\rho_{m2} = \left(\frac{x_g}{\rho_{g2}} + \frac{x_w}{\rho_w}\right)^{-1}$$

(32) Calculate the axial velocity at rotor outlet.

$$V_{z2} = \dot{m}_m/\rho_{m2}A$$

(33) Compare the calculated value of $V_{z2}$ in (32) with the assumed value of $V_{z2}$ in (17). Iterate steps (17) to (32) until a desired accuracy is obtained.

(34) Calculate total pressure at rotor outlet.

$$P_{02} = \left[1 + (\gamma - 1)\, M_2^2/2\right]^{\gamma/(\gamma-1)} \cdot P_2$$

(35) Calculate the total pressure loss coefficient across stator due to gas phase, $\bar{\omega}_{g,S}$, and stator outlet angle, $\alpha_3$, as shown in Appendix 3, Subroutine WICGSL.

(36) Obtain the total pressure loss coefficient due to the increase of momentum thickness because of the existence of small droplets in the boundary layer on a stator blade surface, $\bar{\omega}_{\theta,S}$, as shown in Appendix 3, Subroutine WICSDL.

(37) Obtain the total pressure loss across stator due to the Stokesian drag of water droplets in the free stream outside boundary layer $\bar{\omega}_{s,S}$; as shown in Appendix 3, Subroutine WICSTL, it may be noted that Stokesian drag is zero in the case of small droplets by definition.

(38) Calculate total pressure loss factor across stator.

$$\frac{P_{03}}{P_{02}} = 1 - (\bar{\omega}_{g,S} + \bar{\omega}_{\theta,S} + \bar{\omega}_{s,S}) \left(1 - \frac{P_2}{P_{02}}\right)$$

(39) Calculate the total pressure ratio and gas phase total temperature ratio across stage.

$$PR = \frac{P_{03}}{P_{01}} = \left(\frac{T_{03,g}}{T_{01,g}}\right)^{\frac{\gamma}{\gamma-1}} \cdot \left(\frac{P_{02,r}}{P_{01,r}}\right)\left(\frac{P_{02,ri}}{P_{01,r}}\right)^{-1} \cdot \left(\frac{P_{03}}{P_{02}}\right)$$

$$TR = T_{03,g}/T_{01,g}$$

(40) Obtain total pressure and gas phase total temperature at stator outlet.

$$P_{03} = \left(\frac{P_{03}}{P_{02}}\right) P_{02}$$

$$T_{03,g} = T_{02,g}$$

(41) Calculate the average value of specific heat ratio.

(42) Calculate the stage efficiency.

$$\eta = \frac{PR^{(\gamma-1)/\gamma} - 1}{TR - 1}$$

A.2.3 Procedure when Large or Large and Small Droplets are Present

It is postulated that when large droplets are present, they always play the more dominant role.

The following assumptions are introduced.

(1) Droplets move with equal probability in all directions in the forward sector.

(2) A fraction of the droplets impacting the droplets undergo rebound. The balance of impacting droplets move over the blade surface in the form of a thick film. The momentum of the thick film is appreciable and represents a loss of mixture momentum.

(3) The development of the boundary layer can be estimated based on the following reasoning: (a) the thick film presents a continuous rough surface; (b) the roughness is at most of the order of droplet thickness; and (c) the boundary layer is fully turbulent and extends over the chord length. A coefficient of friction for the flow can then be based on Reference 13.

(4) The deviation angle remains the same as in the case of single phase flow.

(5) Considering a blade passage flow, between two neighboring blades, away from solid boundaries, the drag due to droplets can be calculated assuming Stokes drag relation. The number of droplets suffering such drag is the sum of the number of non-impacting droplets and the number of rebound droplets.

(6) The overall loss is therefore obtained by adding the losses described under (2), (3) and (5).

The stage performance, when large droplets are present, with or without small droplets, is carried out as follows. It may be pointed out that the determination of stage pressure ratio follows the same procedure as in the case of a mixture with small droplets only, Appendix Section A.2.2. The determination of the loss coefficient when large droplets are present is wholly different.

(1) From given initial conditions or from the previous stage properties the gas phase total temperature, $T_{01,g}$ and total pressure, $P_{01}$, are obtained.

(2) Calculate the gas constant, $R_g$, specific heat at constant pressure, $c_{pg}$, and specific heat ratio, $\gamma$.

(3) Calculate the stagnation density of gas phase.

$$\rho_{01,g} = P_{01}/R_g\, T_{01,g}$$

(4) Assume a value for Mach number, $M_a$.

(5) Calculate the static density, and temperature of gas phase, as follows:

$$\rho_1 = \left[1 + (\gamma - 1)M_{a2}^2/2\right]^{-1/(\gamma-1)} \cdot \rho_{01,g}$$

$$T_{g1} = \left[1 + (\gamma - 1)M_{a2}^2/2\right]^{-1} T_{01,g}$$

(6) Calculate the acoustic speed in the gas phase, $a_{g1}$.

$$a_{g1} = (\gamma\, R_g\, T_{g1}\, G_c)^{0.5}$$

(7) Calculate the acoustic speed in the mixture, $a_1$, as shown in Appendix 3, Function WICASD.

(8) Calculate the density of the mixture.

$$\rho_m = \left(\frac{x_g}{\rho_g} + \frac{x_w}{\rho_w}\right)^{-1}$$

(9) Calculate the axial velocity.

$$V_{z1} = \dot{m}_m/\rho_m A$$

(10) Calculate the absolute velocity.

$$V_1 = V_{z1}/\cos\alpha_1$$

(11) Calculate the Mach number, $M_c$.

$$M_c = V_1/a_1$$

(12) Compare the assumed Mach number, $M_a$, with the calculated one, $M_c$. If $M_a$ agrees within prescribed limits with $M_c$, proceed to the next step. Otherwise steps (4) to (11) must be repeated.

(13) Calculate the components of velocity at rotor inlet as follows:

$$V_1 = V_{z1}/\cos\alpha_1$$

$$V_{\theta 1} = V_{z1}\tan\alpha_1$$

$$W_{\theta 1} = U_1 - V_{\theta 1}$$

$$W_1 = (V_{z1}^2 + W_{\theta 1}^2)^{1/2}$$

$$\beta_1 = \tan^{-1}(W_{\theta 1}/V_{z1})$$

(14) Calculate relative Mach number at rotor inlet.

$$M_{r1} = W_1/a_1$$

(15) Calculate static pressure at rotor inlet.

$$P_1 = \left[\left(T_{01,g}/T_g\right)\right]^{-\gamma/(\gamma-1)} \cdot P_{01}$$

(16) Calculate the total pressure at rotor inlet based on $M_r$.

$$P_{01,r} = \left[1 + (\gamma - 1)\, M_{r1}/2\right]^{\gamma/(\gamma-1)} \cdot P_1$$

(17) Assume $V_{z2}$ to calculate the total pressure loss due to gas phase, $\bar{\omega}_{g,R}$, and rotor outlet angle $\beta_2$, as shown in Appendix 3, Subroutine WICGSL.

(18) Calculate the total pressure loss coefficient due to the momentum gained by thick water film moving over the rotor blade surface $\bar{\omega}_{f,R}$, as shown in Appendix 3, Subroutine WICFML.

(19) Calculate the total pressure loss coefficient due to turbulent flow of mixture over the rough film surface of rotor blade, $\bar{\omega}_{r,R}$, as shown in Appendix 3, Subroutine WICRSL.

(20) Calcualte the total pressure loss coefficient due to the Stokesian drag of water droplets in rotor passage, $\bar{\omega}_{s,R}$, as shown in Appendix 3, Subroutine WICSTL.

(21) Calculate the components of velocity diagram at rotor outlets as follows:

$$W_{\theta 2} = V_{z2} \tan \beta_2$$

$$V_{\theta 2} = U_2 - W_{\theta 2}$$

$$W_2 = \left(V_{z2}^2 + W_{\theta 2}^2\right)^{0.5}$$

$$V_2 = \left(V_{z2}^2 + V_{\theta 2}^2\right)^{0.5}$$

$$\alpha_2 = \tan^{-1}(V_{\theta 2}/V_{z2})$$

(22) Calculate the work input.

$$\Delta H_0 = (U_2 V_{\theta 2} - U_1 V_{\theta 1})/g_c J$$

(23) Apportion the energy input in the mixture as described in item (15) of A.2.2.1, of Reference (4).

(24) Calculate static temperatrue of gas phase at rotor outlet.

$$T_{g2} = T_{02,g} - V_2^2/2c_{pg} g_c J$$

(25) Calculate the acoustic speed in gas phase.

$$a_{g2} = (\gamma\ R_g\ T_{g2}\ g_c)^{0.5}$$

(26) Assume $\rho_{g2} = \rho_{g1}$ and calculate the acoustic speed in the mixture $a_2$, as shown in Appendix 3, Function WICASD.

(27) Calculate absolute and relative Mach number at rotor outlet.

$$M_2 = V_2/a_2$$

$$M_{r2} = W_2/a_2$$

(28) Calculate total pressure loss factor across rotor.

$$\frac{P_{02,r}}{P_{01,r}} = \frac{P_{02,ri}}{P_{01,r}} - \left(\bar{\omega}_{g,R} + \bar{\omega}_{f,R} + \bar{\omega}_{r,R} + \bar{\omega}_{s,R}\right)\left(1 - \frac{P_1}{P_{01,r}}\right)$$

(29) Calculate total pressure ratio across rotor, and total static pressure at rotor outlet.

$$\frac{P_{02}}{P_{01}} = \left(\frac{T_{02,g}}{T_{01,g}}\right)^{\frac{\gamma}{\gamma-1}} \left(\frac{P_{02,r}}{P_{01,r}}\right) \left(\frac{P_{02,ri}}{P_{01,r}}\right)^{-1}$$

$$P_{02} = \left(\frac{P_{02}}{P_{01}}\right) P_{01}$$

$$p_2 = \left(1 + \frac{\gamma - 1}{2} M_2^2\right)^{\frac{-\gamma}{\gamma-1}} P_{02}$$

(30) Calculate static density at rotor outlet.

$$\rho_{g2} = p_2/R_g T_{g2}$$

(31) Compare the calculated $\rho_{g2}$ in (27) with the assumed $\rho_{g2}$ in (23). Iterate steps (23) to (27) until a desired accuracy is obtained.

(32) Calculate the density of mixture.

$$\rho_{m2} = \left(\frac{x_g}{g} + \frac{x_w}{w}\right)^{-1}$$

(33) Calculate the axial velocity at rotor outlet.

$$V_{z2} = \dot{m}_m/\rho_m A_2$$

(34) Compare the calculated $V_{z2}$ in (33) with the assumed $V_{z2}$ in (34). Iterate steps (17) to (33) until the desired accuracy is obtained.

(35) Calculate total pressure at rotor outlet.

$$P_{02} = \left[1 + (\gamma - 1) M_2^2/2\right]^{\gamma/(\gamma-1)} p_2$$

(36) Calculate the total pressure loss coefficient across stator due to gas phase, $\bar{\omega}_{g,S}$, and stator outlet angle, $\alpha_3$, as shown in Appendix 3, Subroutine WICGSL.

(37) Calculate the total pressure loss coefficient due to the momentum gained by thick water film on the stator blade surface, $\bar{\omega}_{f,S}$, as shown in Appendix 3, Subroutine WICFML.

(38) Calculate the total pressure loss coefficient due to turbulent friction over a rough film surface over the stator blade, $\bar{\omega}_{r,S}$, as shown in Appendix 3, Subroutine WICRSL.

(39) Obtain the total pressure loss across stator due to Stokesian drag of large water droplets in the free stream outside boundary layer, $\bar{\omega}_{s,S}$, as shown in Appendix 3, Subroutine WICSTL.

(40) Calculate total pressure loss factor across the stator.

$$\frac{P_{03}}{P_{02}} = 1 - \left(\bar{\omega}_{g,S} + \bar{\omega}_{f,S} + \bar{\omega}_{r,S} + \bar{\omega}_{s,S}\right)\left(1 - \frac{P_2}{P_{02}}\right)$$

(41) Calculate the total pressure ratio and gas phase total temperature ratio across stage.

$$PR = P_{03}/P_{01} = \left(\frac{T_{03,g}}{T_{01,g}}\right)^{\frac{\gamma}{\gamma-1}} \left(\frac{P_{02,r}}{P_{01,r}}\right)\left(\frac{P_{02,ri}}{P_{01,r}}\right)^{-1} \left(\frac{P_{03}}{P_{02}}\right)$$

$$TR = T_{03,g}/T_{01,g}$$

(42) Obtain total pressure and gas phase total temperature at stator outlet.

$$P_{03} = \left(\frac{P_{03}}{P_{02}}\right) P_{02}$$

$$T_{03,g} = T_{02,g}$$

(43) Calculate the average value of the specific heat ratio.

(44) Calculate the stage efficiency.

$$\eta = \frac{PR^{(\gamma-1)/\gamma} - 1}{TR - 1}$$

## APPENDIX 3

## DETAILED DESCRIPTION OF SUBROUTINES AND EXTERNAL FUNCTIONS

There are 22 subroutines and 13 external functions in this program. Brief descriptions of these subprograms are presented in Chapter III. A more detailed description of each subprogram is presented here. Each of the subroutines and external functions is presented as follows: (1) Description, (2) Input variables, (3) Output variables, and (4) Usage.

### SUBROUTINE WICSPB

(1) Description:

The subroutine WICSPB is used for the calculation of stage performance based on the analytical/correlation method for small droplet. A detailed description of calculation procedure is presented in Appendix 2.

(2) Input Variables:

| | |
|---|---|
| FAIO | initial flow coefficient |
| ISTAGE | stage at which performance calculation is carried out |
| MMASS | mass flow rate of mixture |
| ALFA1 | absolute flow angle at outlet of the previous stage stator |
| DAV | nominal diameter of small droplets |
| DELV | relative velocity between gas phase and large droplets |
| WMAS | mass flow rate of small droplets |
| N | station number |
| AK1 | constant in Eq. (A.3.6)' |

| | |
|---|---|
| AK2 | constant in Eq. (A.3.7)' and (A.3.8)' |
| AK3 | constant in Eq. (A.3.1)' and (A.3.2)' |

(3) Output Variables:

| | |
|---|---|
| OMEGA1 | total pressure loss coefficient due to single-phase (gas) flow profile loss in rotor |
| OMEGA2 | total pressure loss coefficient due to loss for small droplets on account of the change in momentum thickness of boundary layer due to the presence of such droplets in rotor |
| OMEGA3 | total pressure loss coefficient due to Stokesian drag of small droplets in the free stream of blade passage in rotor |
| OMEGA4 | total pressure loss coefficient due to single-phase (gas) flow profile loss in stator |
| OMEGA5 | total pressure loss coefficient due to loss for small droplets on account of the change in momentum thickness of boudnary layer due to the presence of such droplets in stator |
| OMEGA6 | total pressure loss coefficient due to Stokesian drag of small droplets in the free stream of blade passage in stator |
| OMEGAT | sum of total pressure loss coefficients |
| BETA1 | relative flow angle at rotor inlet |
| BETA2 | relative flow angle at rotor outlet |
| VZ | axial velocity |
| ALFA2 | absolute flow angle at stator inlet |
| ALFA3 | absolute flow angle at stator outlet |
| DELTG | rise in total temperature of gas phase across a stage |
| DELTW | rise in temperature of small droplet across a stage |
| W1 | relative velocity at rotor inlet |
| W2 | relative velocity at rotor outlet |
| V1 | absolute velocity at rotor inlet |

| | |
|---|---|
| V2 | absolute velocity at stator inlet |
| V3 | absolute velocity at stator outlet |

(4) Usage:

```
CALL WICSPB (FAIO, ISTAGE, MMASS, ALFA1, WKDONE, DAV, DELV,
             WMAS, N, OMEGA1, OMEGA2, OMEGA3, OMEGA4, OMEGA5,
             OMEGA6, OMEGAT, BETA1, BETA2, VZ, ALFA2, ALFA3,
             DELTG, DELTW, W1, W2, V1, V2, V3, AK1, AK2, AK3)
```

SUBROUTINE WICSPC

(1) Description:

The subroutine WICSPC is used for the calculation of stage performance based on the analytical/correlation method for large droplet. A detailed description of calculation procedure is presented in Appendix 2.

(2) Input Variables:

| | |
|---|---|
| FAIO | initial flow coefficient |
| ISTAGE | stage at which performance calculation is carried out |
| MMASS | mass flow rate of mixture |
| ALFA1 | absolute flow angle at outlet of the previous stage stator |
| WKDONE | work done factor |
| DAV | nominal diameter of large droplets |
| DELV | relative velocity between gas phase and large droplets |
| WWMAS | mass flow rate of large droplets |
| N | station number (Fig. 5.1) |
| REAVE | average Reynolds number |
| DELVU2 | relative velocity between gas phase and droplet |
| DELVL2 | relative velocity between gas phase and droplet |
| AK1 | constant in Eq. (A.3.6)' |
| AK2 | constant in Eq. (A.3.7)' and (A.3.8)' |
| AK3 | constant in Eq. (A.3.1)' and (A.3.2)' |

(3) Output Variables:

| | |
|---|---|
| OMEGA1 | total pressure loss coefficient due to the mixture boundary layer formed over rough film surface in rotor |
| OMEGA2 | total pressure loss coefficient due to film formed on rotor blade surface |
| OMEGA3 | total pressure loss coefficient due to Stokesian drag of large droplets in the free stream of blade passage in rotor |
| OMEGA4 | total pressure loss coefficient due to the mixture boundary layer formed over rough film surface in stator |
| OMEGA5 | total pressure loss coefficient due to film formed on stator blade surface |
| OMEGA6 | total pressure loss coefficient due to Stokesian drag of large droplets in the free stream of blade passage in stator |
| OMEGAT | sum of total pressure loss coefficient |
| BETA1 | relative flow angle at rotor inlet |
| BETA2 | relative flow angle at rotor outlet |
| VZ | axial velocity |
| ALFA2 | absolute flow angle at stator inlet |
| ALFA3 | absolute flow angle at stator outlet |
| DELTG | rise in total temperature of gas phase across a stage |
| DELTW | rise in temperature of small droplet across a stage |
| W1 | relative velocity at rotor inlet |
| W2 | relative velocity at rotor outlet |
| V1 | absolute velocity at rotor inlet |
| V2 | absolute velocity at stator inlet |
| V3 | absolute velocity at stator outlet |

(4) Usage:

```
CALL WICSPC (FAIO, ISTAGE, MMASS, ALFA1, WKDONE, DAV, DELV,
             WMAS, WWMAS, N, OMEGA1, OMEGA2, OMEGA3, OMEGA4,
```

OMEGA5, OMEGA6, OMEGAT, BETA1, BETA2, VZ, ALFA2, ALFA3, DELTG, DELTW, W1, W2, V1, V2, V3, REAVE, DELVU2, DELVL2, AK1, AK2, AK3)

SUBROUTINE WICSPD

(1) Description

The subroutine WICSPD is used for the calculation of design point performance. The properties obtained in this subroutine become reference properties for calculation of off-design performance.

(2) Input Variables

| | |
|---|---|
| AMASS | mass flow rate |
| ISTAGE | stage at which performance calculation is carried out |

(3) Output Variables:

none

(4) Usage:

CALL WICSPD (AMASS, ISTAGE)

SUBROUTINE WICGSL

(1) Description:

The subroutine WICGSL is used for the calculation of single-phase (gas) flow loss. In the current model, the concept of the equivalent diffusion ratio by Lieblein (Ref. 10) and Swan's correlation (Ref. 11) have been employed in order to estimate the blade outlet flow angle and loss due to turbulent flow of gaseous phase over the rigid blade surface. In the event that a different model is to be employed, for the estimation of the blade outlet angles of the gaseous phase, subroutine WICGSL, function WICED, and if needed subroutine WICSPD should be modified to incorporate the new correlation.

Lieblein has shown that the design point loading factor, the Diffusion Factor, does not represent a suitable criterion for loading at off-design conditions, except possibly at other

minimum loss points. This is due to the fact that the basic derivation of the Diffusion Factor has been based on a flow model which corresponds to operation at or near minimum loss. He has therefore suggested a generalized loading parameter. This parameter, the Equivalent Diffusion Ratio, is based on the ratio of the maximum suction surface velocity and trailing edge velocity for a given section cascade. Lieblein has deduced an expression which approximates this velocity ratio in terms of measured overall performance. The Equivalent Diffusion Ratio is suitable for correlation of low speed data. For the general case where the axial velocity ratio may be large, such as in a rotor or stator cascade, the Equivalent Diffusion Ratio, $D_{eq}$, has been defined as follows:

$$D_{eq} = \frac{\cos\beta_2 V_{z_1}}{\cos\beta_1 V_{z_2}} \left[ 1.12 + k(i-i^*)^{1.43} + 0.61 \frac{\cos^2\beta_1}{\sigma} \cdot \underline{K} \right] \qquad (A.3.1)$$

$$\text{where } K = \tan\beta_1 - \frac{r_2}{r_1} \frac{V_{z_2}}{V_{z_1}} \cdot \tan\beta_2 - \frac{\omega r_1}{V_{z_1}} \left( 1 - \frac{r_2^2}{r_1^2} \right)$$

and k = 0.0117 for the NACA 65 ($A_{10}$) blades and k = 0.007 for the $C_4$ circular-arc blades. The Equivalent Diffusion Ratio at minimum loss, $D_{eq}^*$, is obtained by dropping the term representing the incidence angle effects, that is as follows:

$$D_{eq}^* = \frac{\cos\beta_2 V_{z_1}}{\cos\beta_1 V_{z_2}} \left\{ 1.12 + 0.61 \frac{\cos^2\beta_1}{\sigma} \cdot K \right\} \qquad (A.3.2)$$

The wake momentum thickness can be expressed nondimensionally as follows:

$$\left(\frac{\theta}{c}\right) = \frac{\bar{\omega}\cos\beta_2}{2\sigma} \left(\frac{\cos\beta_2}{\cos\beta_1}\right)^2 \qquad (A.3.3)$$

where c is the chord length of the blades.

At minimum loss, Eq. (A.3.3) yields

$$\left(\frac{\theta}{c}\right)^* = \frac{\bar{\omega}^* \cos\beta_2}{2\sigma} \left(\frac{\cos\beta_2^*}{\cos\beta_1^*}\right)^2 \tag{A.3.4}$$

Also, form Eq. (A.3.3), the total pressure loss coefficient $\bar{\omega}$, can be expressed as follows:

$$\bar{\omega} = \left(\frac{\theta}{c}\right) \frac{2\sigma}{\cos\beta_2} \left(\frac{\cos\beta_1}{\cos\beta_2}\right)^2 \tag{A.3.5}$$

From the cascade test data, the deviation angle, $\delta$, and the non-dimensional wake momentum thickness, $(\frac{\theta}{c})$, are expressed in terms of the $D_{eq}$, $D_{eq}^*$, $(\frac{\theta}{c})^*$, and inlet Mach number, M, as follows (see Swan Ref. 11):

$$\delta = \delta^* + [6.40 - 9.45(M_1 - 0.60)]\,(D_{eq} - D_{eq}^*) \cdot AK1 \tag{A.3.6}$$

$$\left(\frac{\theta}{c}\right) = \left(\frac{\theta}{c}\right)^* + (0.827M_1 - 2.692M_1^2 - 2.675M_1^3)\,(D_{eq} - D_{eq}^*)^2 \cdot AK2 \tag{A.3.7}$$

for $D_{eq} > D_{eq}^*$

$$\left(\frac{\theta}{c}\right) = \left(\frac{\theta}{c}\right)^* + (2.89M_1 - 8.71M_1^2 + 9.36M_1^3)\,(D_{eq} - D_{eq}^*)^2 \cdot AK2 \tag{A.3.8}$$

for $D_{eq} < D_{eq}^*$

Using these empirical expressions, the air angle at blade outlet and total pressure loss coefficient at an off-design point can be determined as follows:

(i) Calculate the inlet angle, $\beta_1$, and the inlet Mach number, $M_1$.

(ii) Calculate the Equivalent Diffusion ratio at minimum loss, $D_{eq}^*$.

(iii) Calculate the nondimensional wake momentum thickness at minimum loss, $(\frac{\theta}{c})^*$.

(iv) Assume the fluid outlet angle, $(\beta_2)_a$.

(v) Calculate the incidence angle, i, $i=\beta_1 - \beta_1^* + i^*$.

(vi) Calculate the Equivalent Diffusion Ratio $D_{eq}$.

(vii) Calculate the deviation angle, $\delta$.

(vii) Calculate the fluid outlet angle, $(\beta_2)_c$, $(\beta_2)_c = \beta_2^* - \delta^* + \delta$.

(ix) Compare the assumed value of fluid outlet angle, $(\beta_2)_a$, with the calculated value of that, $(\beta_2)_c$ to check if $|(\beta_2)_a - (\beta_2)_c| < \varepsilon$ where $\varepsilon$ is the desired accuracy. Iterate step (iv) to step (ix) until satisfactory accuracy is obtained.

(x) Calculate the nondimensional wake momentum thickness, $(\frac{\theta}{c})$.

(xi) Calculate the total pressure loss coefficient $\bar{\omega}$.

Figure (A.3.1) shows the flow chart of the calculation procedure to predict the outlet angle and total pressure loss coefficient.

The program also includes a provision for modifying the equations given in Ref. 10 and 11. Equations (A.3.1), (A.3.2), (A.3.6), (A.3.7), and (A.3.8) can be modified by introducing constants AK1, AK2, and AK3 as follows.

$$D_{eq} = \frac{\cos\beta_2}{\cos\beta_1} \frac{V_{z_1}}{V_{z_2}} \left[1.12 + k(i-i^*)^{1.43} + 0.61 \frac{\cos^2\beta_1}{\sigma} K\right] \cdot AK3 \qquad (A.3.1)'$$

$$D_{eq}^* = \frac{\cos\beta_2}{\cos\beta_1} \frac{V_{z_1}}{V_{z_2}} \left[1.12 + 0.61 \frac{\cos^2\beta_1}{\sigma}\right] \cdot AK3 \qquad (A.3.2)'$$

$$\delta = \delta^* + \left[6.40 - 9.45\,(M_1 - 0.60)\right] (D_{eq} - D_{eq}^*) \cdot AK1 \qquad (A.3.6)'$$

$$(\frac{\theta}{c}) = (\frac{\theta}{c})^* + (0.827M_1 - 2.692M_1^2 - 2.675M_1^3)\,(D_{eq} - D_{eq}^*)^2 \cdot AK2 \qquad (A.3.7)'$$

for $D_{eq} > D_{eq}^*$

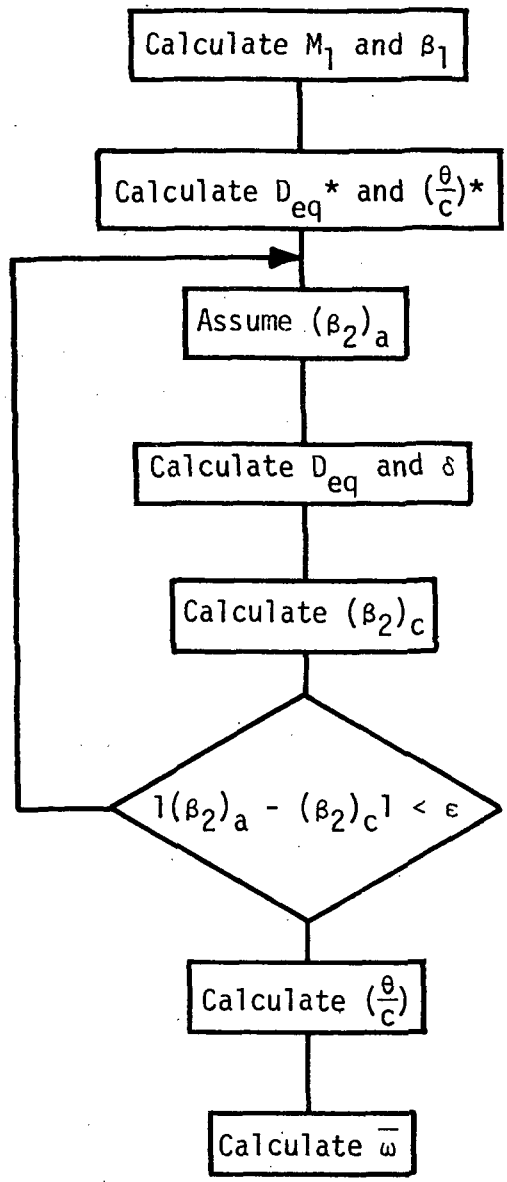


Fig. A.3.1 Procedure for Prediction of Total Pressure Loss Coefficient and Blade Outlet Flow Angle

$$\left(\frac{\theta}{c}\right) = \left(\frac{\theta}{c}\right)^* + (2.80M_1 - 8.71M_1^2 + 9.36M_1^3)\,(D_{eq} - D_{eq}^*)^2 \cdot AK2 \qquad (A.3.8)'$$

for $D_{eq} < D_{eq}^*$.

(2) Input Variables

| | |
|---|---|
| SIGUMA | solidity |
| BET1S | blade inlet flow angle at design point |
| BET2S | blade outlet flow angle at design point |
| AINCIS | incidence at desing point |
| ADEVIS | deviation at design point |
| AMACH1 | blade inlet Mach number |
| BET1 | blade inlet flow angle |
| DEQS | equivalent diffusion ratio at design point, $D_{eq}^*$ |
| SITACS | dimensionless momentum thickness at design point, $\left(\frac{\theta}{c}\right)^*$ |
| X | Mach number below which the effect of Mach number disappears in estimating deviation angle. The value of 0.6 is recommended by Swan (Ref. 11). |
| AK1 | constant in Eq. (A.3.6)' |
| AK2 | constant in Eq. (A.3.7)' and (A.3.8)' |
| AK3 | constant in Eq. (A.3.1)' and (A.3.2)' |
| VZ1 | axial velocity at blade inlet |
| VZ2 | axial velocity at blade outlet |
| UR1 | rotor blade speed at blade inlet |
| R1 | radius at blade inlet |
| R2 | radius at blade outlet |

(3) Output Variables:

| | |
|---|---|
| DEQN | equivalent diffusion ratio, $D_{eq}$ |
| SITACN | dimensionless momentum thickness, $\left(\frac{\theta}{c}\right)$ |
| BET2N | blade outlet angle |
| OMEGAN | total pressure loss coefficient |

(4) Usage:

```
CALL WICGSL (SIGUMA, BET1S, BET2S, AINCIS, ADEVIS, AMACH1,
             BET1, DEQS, DEQN, SITACS, SITACN, BET2N, OMEGAN,
             X, AK1, AK2, AK3, VZ1, VZ2, UR1, R1, R2)
```

SUBROUTINE WICSDL

(1) Description:

The subroutine WICSDL is used for the calculation of loss for small droplets on account of the change in momentum thickness of the boundary layer due to the presence of such droplets.

In order to estimate the loss pertaining to the increase of momentum thickness due to the existence of small droplets in the boundary layer, Soo's boundary layer analysis for a gas-solids suspension is introduced (Ref. 12). In an isothermal incompressible system, Soo has derived the following equation for suspended particles under the assumption that the number of collisions among particles is negligible when compared to that with the wall,

$$a = \left(\frac{a}{b}\right)\left(\frac{\delta}{x}\right) - \frac{4a^2}{3b^2}\left(\frac{\delta}{x}\right)^{3/4} + \frac{4a^3}{3b^3}\left(\frac{\delta}{x}\right)^{1/2} - \frac{4a^4}{b}\left(\frac{\delta}{x}\right)^{1/4} + \frac{4a^5}{b^5}\ln\left[1 + \frac{b}{a}\left(\frac{\delta}{x}\right)^{1/4}\right] \qquad (A.3.9)$$

where

$$a = \frac{0.0225\left(\frac{\bar{\mu}}{U\rho_0 x}\right)^{1/4}}{0.1402\left(\frac{\rho_{p_0}}{\rho_0}\right) + 0.0972}$$

$$b = \frac{\frac{1}{2\sqrt{\pi}} \frac{\rho_{p_0}}{\rho_0} \frac{U_{pw} \quad < U_{pw}^2 >}{U^2}}{0.1402 \left(\frac{\rho_{p_0}}{\rho}\right) + 0.0972}$$

Neglecting shear due to impact of solid particles, Soo derived the following equation.

$$\frac{\delta}{x} = 0.37 \left(\frac{Ux\rho_0}{\mu}\right)^{-1/5} / (1 + 1.442\rho_{p_0}/\rho_0)^{0.8} \qquad (A.3.10)$$

The boundary layer thickness, $\delta$, can be obtained from Eqs. (A.3.9) or (A.3.10). In the present model, Eq. (A.3.10) was used.

The momentum thickness, due to liquid phase, p, is given by

$$\frac{\theta_p}{\delta} = \left(\frac{U_p - U_{pw}}{U_p}\right)^2 \frac{m}{(1+m)\ (2+m)} - \left(\frac{\rho_{p_0} - \rho_{pw}}{\rho_{p_0}}\right) \cdot \frac{U_{pw}}{U_p} \cdot \frac{1}{\alpha + 1}$$

$$+ \left(\frac{\rho_{p_0} - \rho_{pw}}{\rho_{p_0}}\right) \left(\frac{U_p - U_{pw}}{U_p}\right)^2$$

$$\cdot \left[\frac{\Gamma(\frac{2}{m}+1) \cdot \Gamma(\alpha+1)}{\Gamma(\frac{2}{m}+\alpha+2)} - \frac{\Gamma(\frac{1}{m}+1) \cdot \Gamma(\alpha+1)}{\Gamma(\frac{1}{m}+\alpha+2)}\right] \qquad (A.3.10)$$

where $\alpha$ and m are constants associated with distribution of velocity and density of liquid phase in the boundary layer namely

$$u_p = U_{pw} + (U_p - U_{pw}) \left(\frac{y}{\delta}\right)^{1/m}$$

$$\rho_p = \rho_{pw} - (\rho_{p0} - \rho_{pw}) \left(1 - \frac{y}{\delta}\right)^{\alpha}$$

For the case of solid, spherical particles of 100 and 200 μm in diameter in air moving at room conditions with a velocity of 50 to 100 fps, Soo has obtained the following values for the various quantities.

$n = 7$, $m = 1.25$, $\alpha = 2.30$,

$$\frac{U_p - U_{pw}}{U_p} = 0.812, \quad \frac{\rho_{pw}}{\rho_{p_0}} = 1.451$$

Utilizing the above values, Eq. (A.3.10) becomes

$$\frac{\theta_p}{\delta} = 0.1402$$

Following the procedure of Lieblein, the total pressure loss coefficient due to the increase of momentum thickness, $\theta_{p,R}$, because of the existence of small droplets in the boundary layer over rotor blade surface, $\overline{\omega}_{\theta,R}$, can be expressed as follows:

$$\omega_{\theta,R} = \left(\frac{\theta_{p,r}}{c}\right) \frac{2\,\sigma}{\cos\beta_2} \left(\frac{\cos\beta_1}{\cos\beta_2}\right)^2$$

Similarly, the total pressure loss coefficient due to the increase of momentum thickness, $\theta_{p,s}$, because of the existence of small droplets in the boundary layer on stator blade surface $\overline{\omega}_{\theta,s}$, can be expressed as follows:

$$\omega_{\theta,s} = \left(\frac{\theta_{p,s}}{c}\right) \frac{2\,\sigma}{\cos\alpha_3} \left(\frac{\cos\alpha_2}{\cos\alpha_3}\right)^2$$

The stagnation pressure losses corresponding to $\bar{\omega}_{\theta,r}$ and $\bar{\omega}_{\theta,s}$ can be written as follows.

$$\Delta P_{\theta,R} = \frac{1}{2} \rho_1 W_1^2 \bar{\omega}_{\theta,R}$$

$$\Delta P_{\theta,s} = \frac{1}{2} \rho^2 V_2^2 \bar{\omega}_{\theta,s}$$

Thus, the total pressure loss across a stage due to the increase of momentum thickness because of the existence of small droplets in a boundary layer is given by

$$\Delta P_{\theta} = \Delta P_{\theta,R} + \Delta P_{\theta,s}$$

(2) Input Variables

| | |
|---|---|
| CHORD | chord length |
| SIGUMA | solidity |
| BETA1 | blade inlet flow angle |
| BETA2 | blade outlet flow angle |
| UG | average flow velocity |
| RHOG | density |
| AMASSW | mass flow rate |
| AREA | flow area |
| VZ | axial velocity |

(3) Output Variables:

| | |
|---|---|
| OMEGAP | total pressure loss coefficient |

(4) Usage:

```
CALL WICSDL (CHORD, SIGUMA, BETA1, BETA2, UG, RHOG, AMASSW,
             AREA, VZ, OMEGAP)
```

SUBROUTINE WICSTL

(1) Description:

The subroutine WICSTL is used for the calculation of loss

due to Stokesian drag of droplets in the free stream of blade passage.

In view of the assumption pertaining to motion of small droplets (with zero relative velocity with respect to gas phase), the total pressure loss due to Stokesian drag becomes zero for small droplets.

For large droplets, the model introduced is described below.

The large droplets move with substantial relative velocity with respect to the gas phase and have equal probability of motion in all directions. However, regarding the latter aspect, the droplets are divided into two subclasses with a direction of motion for each class, specified with respect to the gas phase velocity vector. The number of droplets impacting on the blade surface is then proportional to the blade surface area projection normal to the velocity vectors for the two subclasses of droplets.

Referring to Fig. A.3.2, the two subclasses are shown as (1) and (2) which have direction of motion given by $\gamma_1$, and $\gamma_2$ relative to the gas phase velocity vector. The total number of droplets in subclass (1) is proportional to angle $2\gamma_1$ and those in subclass (2) is proportional to angle $2\gamma_1$ $(180 - 2\gamma_1)$. The relative velocity between the gas phase and droplets of subclass (1) is given by the difference between $V_{g1}$ and the component of $V_{p1}$ (the velocity of droplets in subclass (1) in the direction of $V_{g1}$). Similarly the relative velocity between the gas phase and the droplets of subclass (2) is given by the difference between $V_{g1}$ and the component of $V_{p2}$ in the direction of $V_{g1}$. Thus for droplets of subclass (1) the relative velocity is given by the relation,

$$V_{g1} = V_{p1} \cos \gamma_1$$

and for droplets of subclass (2), the relative velocity is

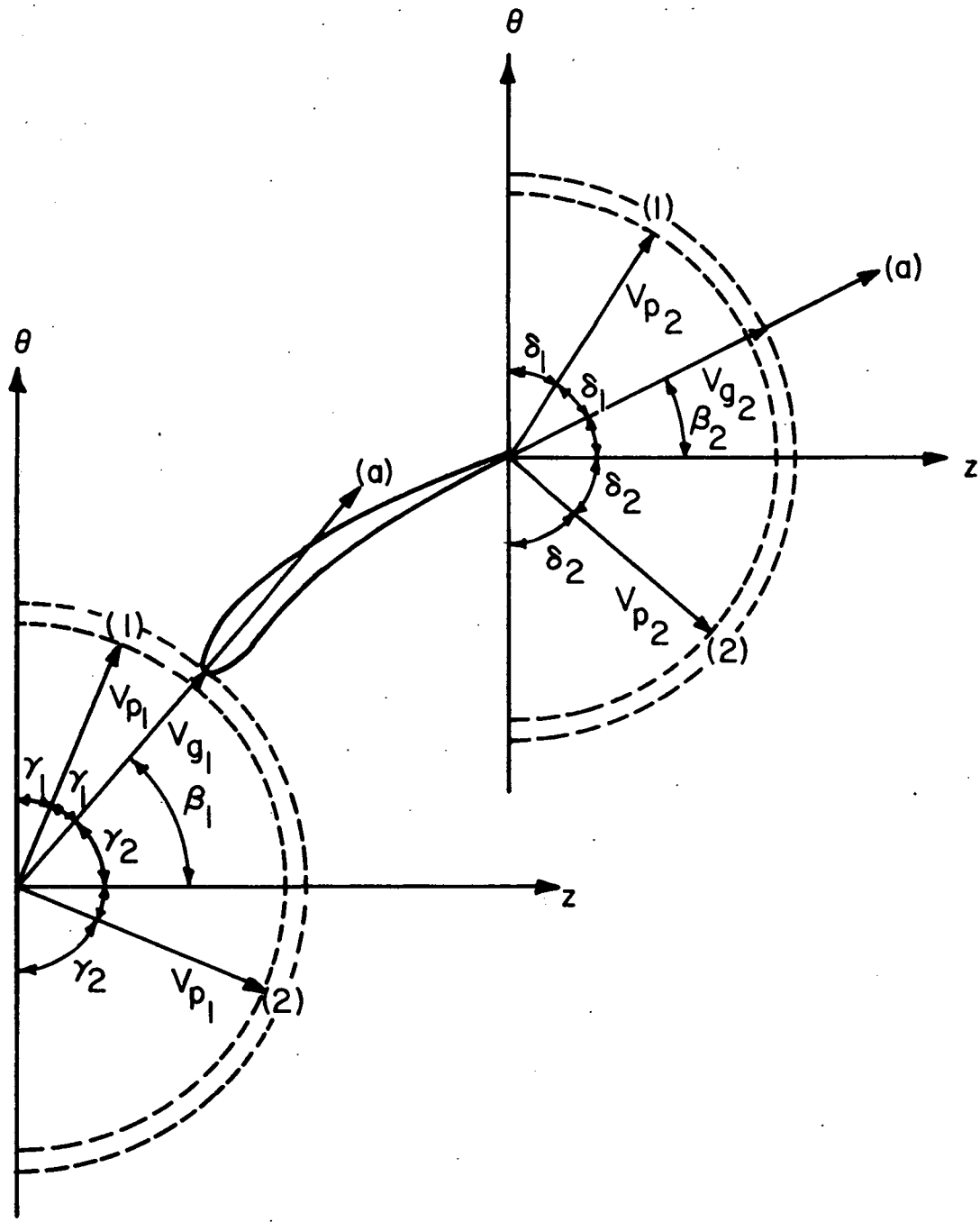


Fig. A.3.2 Model for Motion of Large Droplet

given by the relation,

$$V_{g1} = V_{p1} \cos \gamma_2$$

In Fig. A.3.2, the blade outlet conditions are also shown. As at the blade inlet section the relative velocities between the gas phase and droplets of subclasses (1) and (2) may be written as follows:

$V_{g2} - V_{p1} \cos \delta_1$ for subclass (1), and

$V_{g2} - V_{p2} \cos \delta_2$ for subclass (2).

where $\delta_1$ is the inclination of the mean velocity vector for subclass (1) and $\delta_2$, the inclination of the mean velocity vector at outlet, designated $V_{g2}$. Once again, at the outlet section, the number of droplets in subclass (1) is proportional to angle $2\delta_1$, and the number of droplets in subclass (2) is proportional to angle $2\delta_2$, or $(180 - 2\delta_1)$. It is clear that the total number of droplets is divided into two new subclasses at the outlet, based on the directions of motion of droplets relative to the gas phase velocity. The two subclasses at the outlet are the output from the blade row for the given initial and operating conditions. Based on the foregoing model of motion of large droplets the total pressure loss coefficient due to the Stokesian drag of large water droplets in a rotor passage, $\overline{\omega}_{s,R}$, can be estimated as follows:

The Stokesian drag of water droplets across a rotor blade is given by

$$D = c_D \frac{1}{2} \rho_{g1} (W_{g1} - W_{p1})^2 A_p N_{d,r}$$

where $W_{g1}$ and $W_{p1}$ are relative velocities of gaseous phase and droplets at rotor inlet, $A_p$, the project area of a droplet,

and $N_{d,r}$, the number of droplets that exist in rotor passage. Referring to Fig. A.3.3, the Stokesian drag, D, can also be written as

$$D = (P_{01,r} - P_{02,r})\ A_R$$

where $P_{01,r}$ and $P_{02,r}$ are total pressure at station (1) and (2) in rotor coordinate system, and $A_R$ is the average flow area in a rotor blade passage.

From the above equations, the total pressure loss across a rotor blade due to the Stokesian drag, $\Delta P_{s,r}$ becomes

$$P_{s,R} = c_D \frac{1}{2}\ \rho_{g1}\ (W_{g1} - W_{p1})^2\ A_p N_{d,R}/A_R = D/A_R$$

By definition, the total pressure loss coefficient across a rotor blade due to Stokesian drag, $\bar{\omega}_{s,R}$, can be obtained as follows:

$$\bar{\omega}_{s,R} = \frac{\Delta P_{s,R}}{1/2\rho_1 W_{g1}^2} = c_D(W_{g1} - W_{p1})^2\ A_p N_{d,R}/W_{g1}^2 A_R = \frac{D/A_R}{1/2\rho_1 W_{g1}^2}$$

Similarly, the total pressure loss across a stator blade due to Stokesian drag, $\Delta P_{s,S}$ becomes

$$\Delta P_{s,S} = c_D \frac{1}{2} \rho_{g2}\ (V_{g2}^2 - V_{p2}^2)\ A_p N_{d,S}/A_S$$

and the total pressure loss coefficient across a stator blade due to the Stokesian drag, $\bar{\omega}_{s,S}$, can be obtained as follows:

$$\bar{\omega}_{s,S} = \frac{\Delta P_{s,S}}{1/2\rho_2 V_2^2} = c_D\ (V_{g2}^2 - V_{p2}^2)\ A_p N_{d,S}/A_S$$

Thus, the total pressure loss across a stage due to Stokesian drag is given by

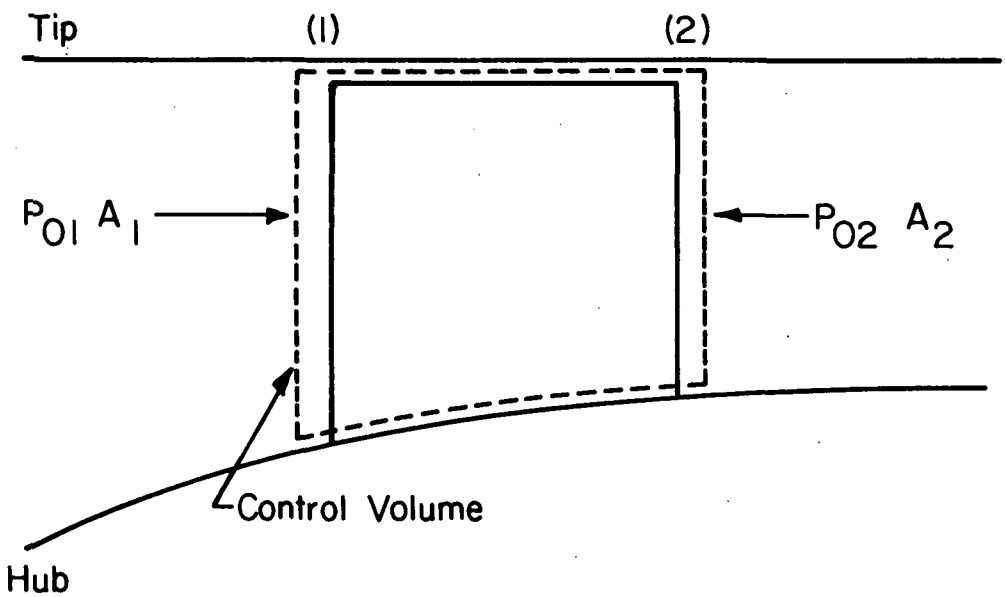


Fig. A.3.3 Control Volume across a Blade

$$\Delta P_s = \Delta P_{s,R} + \Delta P_{s,S}$$

(2) Input Variables:

| | |
|---|---|
| ISTAGE | stage at which performance calculation is carried out |
| IROTOR | index for rotor or stator |
| DAV | nominal droplet diameter |
| W1 | relative velocity at rotor inlet |
| W2 | relative velocity at rotor outlet |
| DELV | relative velocity between gas phase and droplet |
| V2 | absolute velocity at stator inlet |
| V3 | absolute velocity at stator outlet |
| WMASS | mass flow rate of droplet |
| VZ | axial velocity |
| N | station number (Fig. 5.1) |
| BETA1 | relative flow angle at rotor inlet |
| BETA2 | relative flow angle at rotor outlet |
| ALFA2 | absolute flow angle at stator inlet |
| ALFA3 | absolute flow angle at stator outlet |

(3) Output Variables:

| | |
|---|---|
| DELVU2 | relative velocity between gas phase and large droplet in subclass (1) at blade outlet |
| DELVL2 | relative velocity between gas phase and large droplet in subclass (2) at blade outlet |
| OMEGRU | total pressure loss coefficient across rotor due to Stokesian drag in subclass (1) |
| OMEGRL | total pressure loss coefficient across rotor due to Stokesian drag in subclass (2) |
| OMEGSU | total pressure loss coefficien across stator due to Stokesian drag in subclass (1) |
| OMEGSL | total pressure loss coefficient across stator due to Stokesian drag in subclass (2) |
| DRAGRU | drag force due to large droplet in subclass (1) |
| DRAGRL | drag force due to large droplet in subclass (2) |

| | |
|---|---|
| DRAGSU | drag force due to small droplet in subclass (1) |
| DRAGSL | drag force due to small droplet in subclass (2) |
| REAVE | average Reynolds number |

(4) Usage:

```
CALL WICSTL (ISTAGE, IROTOR, DAV, W1, W2, DELV, V2, V3, WMASS,
             VZ, N, BETA1, BETA2, ALFA2, ALFA3, DELVU2, DELVL2,
             OMEGRU, OMEGRL, OMEGSU, OMEGSL, DRAGRU, DRAGRL,
             DRAGSU, DRAGSL, REAVE)
```

SUBROUTINE WICFML

(1) Description:

The subroutine WICFML is used for the calculation of loss due to film formed on blade surface when large droplets are present either by themselves or along with small droplets.

The momentum gained by the thick water film on the rotor blade surface is given by $\dot{m}_{film} V_{film}$ per unit blade length, where $\dot{m}_{film}$ is the mass flow rate of water film on the rotor blade per unit blade length and $V_{film}$ is the mean velocity of water film.

Considering the difference in viscosity between the two phases, the velocity of water film can be estimated as follows:

$$V_{film} = \frac{1}{2} \overline{W}_g \frac{\mu_g}{\mu_l}$$

where $\overline{W}_g$ is the mean velocity of gaseous phase, and $\mu_g$ and $\mu_l$ are the viscosities of gaseous and liquid phases, respectively.

The foregoing momentum can be transformed into an equivalent drag coefficient as follows.

$$c_{D_f} = \dot{m}_{film} V_{film} / \frac{1}{2} \rho_{gl} \overline{W}_g^2 c$$

where $\rho_{gl}$ is blade inlet density of gaseous phase, and c is the chord length of the blade.

The drag coefficient can then be expressed in the form of a total pressure loss coefficient as follows:

$$c_{D_f} \frac{1}{2} \rho_{gl} \overline{W}_{gl}^2 c = \Delta P_f \cdot s \cdot \cos \beta_m$$

where s is the blade pitch and $\beta_m$ is mean flow angle. Noting that $V_z = \overline{W}_g \cos \beta_m$, one obtains the relation, namely

$$\Delta P_f / \frac{1}{2} \rho_{gl} V_z^2 = c_{D_f} \left(\frac{c}{s}\right) \frac{1}{\cos^3 \beta_m}$$

Since $\overline{W}_{gl} = V_z/\cos \beta_1$, the total pressure loss coefficient due to the momentum gained by the thick film on the rotor blade surface can be written as follows:

$$\overline{\omega}_f = \Delta P_f / \frac{1}{2} \rho_{gl} W_{gl}^2 = c_{D_f} \left(\frac{c}{s}\right) \frac{\cos^2 \beta_m}{\cos^3 \beta_m}$$

(2) Input Variables:

| | |
|---|---|
| WG1 | flow velocity at blade inlet |
| WG2 | flow velocity at blade outlet |
| FMASS | mass flow rate of water film on blade surface per unit blade length |
| RHOG1 | density |
| CHORD | chord length |
| SIGUMA | solidity |
| BETA1 | blade inlet flow angle |
| BETA2 | blade outlet flow angle |

(3) Output Variables:

| | |
|---|---|
| CDF | drag coefficient |
| OMEGAF | total pressure loss coefficient |

(4) Usage:

```
CALL WICFML (WG1, WG2, FMASS, RHOG1, CHORD, SIGUMA, BETA1,
             BETA2, CDF, OMEGAF)
```

SUBROUTINE WICRSL

(1) Description:

The subroutine WICRSL is used for the calculation of loss due to the rough surface when large droplets are presented either by themselves or along with small droplets.

Using the experimental results on pipes roughened with sand, L. Prandtl and H. Schlichting carried out a correlation to obtain the friction coefficient on a rough plate (Ref. 13). The correlation was based on the logarithmic velocity distribution law for rough pipes in the form, namely

$$\frac{u}{v^*} = 2.5 \ln\left(\frac{y}{k}\right) + B$$

where v* is friction velocity; k is roughness of surface, and B is a roughness function which depends on the roughness parameter, v*k/r.

In the completely rough regime, they obtained the following relation for the drag coefficient for a plate.

$$c_{Dr} = \left(1.81 + 1.62 \log_{10} \frac{x}{k}\right)^{-2.5}$$

In the present case, x is replaced by the chord length, c, and the surface roughness k is assumed to be the same as the order of mean diameter of large droplets.

Thus, the total pressure loss coefficient due to turbulent friction over a rough film surface on a rotor becomes the following.

$$\bar{\omega}_r = c_{Dr} \left(\frac{c}{s}\right) \frac{\cos^2 \beta_1}{\cos^3 \beta_m}$$

(2) Input Variables:

| | |
|---|---|
| SIGUMA | solidity |
| BETA1 | blade inlet flow angle |

| | |
|---|---|
| BETA2 | blade outlet flow angle |
| CHORD | chord length |
| DL | droplet diameter |

(3) Output Variables:

| | |
|---|---|
| CDR | drag coefficient |
| OMEGAR | total pressure loss coefficient |

(4) Usage:

CALL WICRSL (SIGUMA, BETA1, BETA2, CHORD, DL, CDR, OMEGAR)

SUBROUTINE WICCEN

(1) Description:

The subroutine WICCEN is used for the calculation of spanwise replacement of droplets due to centrifugal action.

Three forces act on a droplet moving through a fluid: (1) the external force consisting of gravitational and centrifugal forces; (2) the buoyancy force, which acts parallel to the esternal force, but in the opposite direction; and (3) the drag force, which appears whenever there is relative motion between the droplet and the fluid, and acts parallel to the direction of motion but in the opposite direction. In the present case, the direction of motion of a droplet relative to the fluid is not parallel to the direction of the external and buoyant forces, and therefore the drag force makes an angle with the other two forces. However, under the one-dimensional approximation, the lines of action of all forces acting on the droplet are co-linear and therefore the forces may be added in obtaining a balance of momentum, as follows:

$$\frac{m}{g_c}\frac{du}{dt} = F_e - F_b - F_D$$

where $F_e$, $F_b$ and $F_D$ are the external, buoyancy and drag forces respectively.

The external force can be expressed as the product of mass and acceleration, $a_e$, of the droplet due to this force, and therefore

$$F_e = \frac{m}{g_c} a_e$$

In the present case, because of the large rotor speeds, the centrifugal acceleration is far larger than the gravitational acceleration. Thus

$$a_e = r\omega^2$$

where r is the radius and $\omega$, the angular velocity. The acceleration can also be written as follows:

$$a_e = V_\theta^2/r$$

where $V_\theta$ is the circumferential velocity of the droplet. For droplets passing through a rotor blade passage, the circumferential component of the relative velocity, $W_\theta$, should be used in place of $V_\theta$. When there is a large change in whirl velocity between the inlet and outlet of a blade row, a mean value of velocity may be more applicable.

The buoyancy force is, by Archimedes' Principle, the product of the mass of the fluid displaced by the droplet and the acceleration from the external force. The mass of fluid displaced is $(m/\rho_w)\rho_g$, where $\rho_w$ is the density of water and $\rho_g$ is the density of the surrounding fluid. The buoyancy force is then given

$$F_b = m\rho_g a_e/\rho_w g_c$$

The drag force is expressed by the relation,

$$F_d = c_D \frac{\rho g u_2}{2\ g_c} A_p$$

where $c_D$ is the drag coefficient and $A_p$ is the projected area of the droplet measured in a plane perpendicular to the direction of motion of the droplet. The drag coefficient $c_D$ can be expressed in a general form as follows:

$$c_D = b_1/Re^n$$

where Re is the Reynolds number based on relative velocity between gas and droplet. The constants $b_1$ and n are as follows.

$b_1 = 24.0$, $n = 1.0$ when $Re < 1.9$
$b_1 = 18.5$, $n = 0.6$ when $1.9 < Re < 500$
$b_1 = 0.44$, $n =$ when $500 < Re < 200{,}000$.

The equation of droplet motion then becomes the following:

$$\frac{du}{dt} = A/r - B\ u^{2-n}$$

where

$$A = (W_\theta)^2_{ave} \cdot (1 - \rho_g/\rho_w),$$

$$B = 3\ u^n\ b_1\ \rho_g^{\ 1-n}/4\rho_w\ D^{1+n}, \text{ and}$$

D being the average droplet diameter. Over a small time interval, the equation of motion can be wirtten as follows:

$$\Delta u = (A/r - B\ u^{2-n})\ \Delta t$$

This equation can be used to determine the radial location of a droplet in a stage as follows:

(i) Select the initial values for $u_1$ and $r_1$.

(ii) Calculate the Reynolds number to determine the values of $b_1$ and n.

(iii) Calculate A and B.

(iv) Calculate the change of u during time interval $\Delta t$.

(v) Calculate the new velocity $u_2$.

$$u_2 = u_1 + \Delta u$$

(vi) Calculate the change in location of droplet in terms of $\Delta r$.

$$\Delta r = (u_1 + u_2) / 2.0 \cdot \Delta t$$

(vii) Calculate the new radial location.

$$r_2 = r_1 + \Delta r$$

(viii) Repeat the calculation for new value of $u_2$ and $r_2$ and progressively extend the calculation.

The time interval should be sufficiently small in order to obtain reasonable accuracy. As stated in Section 2.1.3 in Chapter II of Reference 3, the length between the leading and trailing edges of a blade is divided into ten steps. The time interval $\Delta t$ is then given by the relation, namely

$$\Delta t = \frac{\text{chord}}{V} \times \frac{1}{10}$$

where V is the velocity of mixture in the blade passage.

(2) Input Variables:

| | |
|---|---|
| RZERO | droplet spanwise location at rotor inlet |
| VZERO | droplet spanwise velocity at rotor inlet |
| DD | droplet diameter |
| VZ | axial velocity |
| DELZZ | axial length of a stage |
| ALFAAV | average flow angle |
| FN | rotor blade rotational speed |

| | |
|---|---|
| IRS | index for rotor or stator |
| RHOGAS | density |
| RHUB | radius at hub |
| XG | mass fraction of gas phase |
| XA | mass fraction of dry air |
| XVV | mass fraction of vapor |
| XCH4 | mass fraction of methane |
| RTIPIN | radius at blade tip |
| IPRINT | index for printout |

(3) Output Variables:

| | |
|---|---|
| R2 | droplet spanwise location blade outlet |
| U2 | droplet spanwise velocity at blade outlet |
| ITIP | index for droplet spanwise location |
| VZTIME | time in which flow pass through a stage |

(4) Usage:

```
CALL WICCEN (RZERO, VZERO, DD, VZ, DELZZ, ALFAAV, FN, IRS,
             RHOGAS, RHUB, R2, U2, ITIP, VZTIME, XG, XA,
             XVV, XCH4, RTIPIN, IPRINT)
```

SUBROUTINE WICDMS

(1) Description:

The subroutine WICDMS is used for the calcualtion of amount of small droplets which is centrifuged.

(2) Input Variables:

| | |
|---|---|
| IPRINT | index for printout |
| IRAD | index for spanwise location |
| AMASW1 | mass flow rate of water at rotor inlet |
| AMASWT | mass flow rate of droplet |
| AMASW | mass flow rate of droplet |
| R1 | droplet spanwise location rotor inlet |
| R2 | droplet spanwise location at rotor outlet |
| STAREA | streamtube area |
| RSTAVE | radius of streamtube at its center |
| RTIP | radius at blade tip |

(3) Output Variables:

| | |
|---|---|
| DMIN | amount of water that is centrifuged and enters into a streamtube |
| DMOUT | amount of water that is centrifuged and leaves from a streamtube |
| AMASW2 | mass fraction of water at rotor outlet after correction for centrifugal action |
| DELMAS | net amount of water that is centrifuged |

(4) Usage:

```
CALL WISDMS (IPRINT, IRAD, AMASW1, AMASWT, AMASW, R1, R2,
             STAREA, RSTAVE, RTIP, DMIN, DMOUT, AMASW2, DELMAS)
```

SUBROUTINE WICDML

(1) Description:

The subroutine WICDML is used for the calculation of amount of large droplets which is centrifuged.

(2) Input Variables:

| | |
|---|---|
| IPRINT | index for printout |
| IRAD | index for spanwise location |
| AMASW1 | mass flow rate of water at rotor inlet |
| AMASWT | mass flow rate of droplet |
| AMASW | mass flow rate of droplet |
| R1 | droplet spanwise location rotor inlet |
| R2 | droplet spanwise location at rotor outlet |
| STAREA | streamtube area |
| RSTAVE | radius of streamtube at its center |
| RTIP | radius at blade tip |

(3) Output Variables:

| | |
|---|---|
| DMIN | amount of water taht is centrifuged and enters into a streamtube |
| DMOUT | amount of water that is centrifuged and left from a streamtube |
| AMASW2 | mass fraction of water at rotor outlet after correction for centrifugal action |

| | |
|---|---|
| DELMAS | net amount of water that is centrifuged |

(4) CALL WICDML (IPRINT, IRAD, AMASW1, AMASWT, AMASW, R1, R2, STAREA, RSTAVE, RTIP, DMIN, DMOUT, AMASW2, DELMAS)

SUBROUTINE WICDRG

(1) Description:

The subroutine WICDRG is used for the calculation of drag force on droplet.

(2) Input Variables:

| | |
|---|---|
| D | droplet nominal diameter |
| DELV1 | relative velocity between droplet and gas phase at blade inlet |
| RHGAS1 | density of gas phase at blade inlet |
| RHGAS2 | density of gas phase at blade outlet |

(3) Output Variables:

| | |
|---|---|
| CD2 | drag coefficient |
| DEVL2 | relative velocity between droplet and gas phase at blade outlet |
| DRAG1 | drag force |
| RE | Reynolds number |

(4) Usage:

CALL WICDRG (D, DELV1, RHGAS1, RHGAS2, CD2, DELV2, DRAG1, RE)

SUBROUTINE WICMAC

(1) Description:

Subroutine WICMAC calculates the Mach number in the gas-water droplet mixture. First the acoustic speed in gaseous phase is determined by iteration as follows:

(i) Assume Mach number and calculate static temperature and density.

$$t = \left(1 + \frac{\gamma - 1}{2} M^2\right)^{-1} T_{01}$$

$$\rho = \left(1 = \frac{\gamma - 1}{2} M^2\right)^{-1/(\gamma-1)} P_{01}/RT_{01}$$

(ii) Calculate acoustic speed in gaseous phase

$$a_g = (\gamma\ Rtg_c)^{0.5}$$

(iii) Calculate the axial velocity

$$V_z = \dot{m}/\rho A$$

(iv) Calculate absolute velocity

$$V_1 = V_z/\cos\ \alpha_1$$

(v) Calculate Mach number

$$M_1 = V_1/a_g$$

Compare the calculated Mach number with the assumed value in (i). Iterate steps (i) to (v) until the desired accuracy is obtained. After determining the acoustic speed in gaseous phase, Function WICASD is called to determine the acoustic speed in droplet-laden gas flow.

(2) Input Variables:

| | |
|---|---|
| ISTAGE | stage number |
| AMASSM | mixture mass flow rate |
| TO1G | total temperature of gaseous phase |
| PRES | total pressure |
| XW1 | total water content |
| ALFA | stator outlet angle of the previous stage |
| RMIX | gas content of gaseous phase |
| CPMIX | specific heat at constant pressure for gaseous phase |
| AREA1 | streamtube area of IGV outlet |

(3) Output Variables:

| | |
|---|---|
| M | Mach number |

| | |
|---|---|
| VZ | axial velocity |
| C | acoustic speed in mixture |

(4) Usage:

CALL WICMAC (ISTAGE, AMASSM, TO1G, PRES, M, VZ, C, XW1, ALFA, RMIX, CPMIX, AREA1)

FUNCTION WICASD

(1) Description:

Function WICASD calculates the acoustic speed in droplet-laden gas flow. The following equation is used (Ref. 14).

$$a = \left[\left\{(1 - \sigma_v)\rho_g + \sigma_v \rho_w\right\}\left\{\frac{1-\sigma_v}{\rho_g a_g} + \frac{\sigma_v}{\rho_w a_w^2}\right\}\right]^{-1/2}$$

where

$a_g$ = acoustic speed in gaseous phase

$a_w$ = acoustic speed in water

$\rho_g$ = density of gaseous phase

$\rho_w$ = density of water

$\sigma_v$ = particulate liquid volume fraction

$x_w$ = particulate liquid mass fraction

$\sigma_v = x_w \rho_g \,/\, \left[\rho_w - x_w (\rho_w - \rho_g)\right]$

(2) Input Variables:

| | |
|---|---|
| XW | total water content |
| RHOG | density of gas phase |
| CG | acoustic speed of gaseous phase |

(3) Output Variable:

| | |
|---|---|
| WICASD | acoustic speed in gas-water droplet mixture |

(4) Usage:

WICASD (XW, RHOG, CG)

FUNCTION WICED

(1) Description:

Function WICED is called in Subroutine WICGSL. The equivalent diffusion ratio is obtained from the following equation.

$$D_{eq} = \frac{\cos\beta_2}{\cos\beta_1} \frac{V_{z_1}}{V_{z_2}} \left[ 1.12 + k\,(i - i^*)^{1.43} + 0.61 \frac{\cos\beta_1}{\sigma} K \right] \cdot AK3$$

where

$$K = \tan\beta_1 - \frac{r_2}{r_1} \frac{V_{z_2}}{V_{z_1}} \tan\beta_1 - \frac{\omega r_1}{V_{z_1}} \left[ 1 - \frac{r_2^2}{r_1^2} \right]$$

and where k = 0.0117 for NACA 65 ($A_{10}$) blades and k = 0.007 for the C4 airfoils.

(2) Input Variables:

| | |
|---|---|
| AK3 | constant, normally one |
| VZ1 | axial velocity at blade inlet |
| VZ2 | axial velocity at blade outlet |
| UR1 | rotor blade speed at rotor inlet |
| R1 | radius at blade inlet |
| R2 | radius at blade outlet |
| BET1 | blade inlet flow angle |
| BET2 | blade outlet flow angle |
| SIGUMA | solidity |
| AINCIS | incidence at design point |
| AINCI | incidence |

(3) Output Variable:

| | |
|---|---|
| WICED | equivalent diffusion ratio |

(4) Usage:

WICED (AK3, VZ1, VZ2, UR1, R1, R2, BET1, BET2, SIGUMA, AINCIS, AINCI)

FUNCTION WICMTK

(1) Description:

Function WICMTK is called in Subroutine WICGSL. The ratio of wake momentum thickness and chord are obtained from the following equations.

$$\left(\frac{\theta}{c}\right) = \left(\frac{\theta}{c}\right)^* + (0.827\ M_1 - 2.692\ M_1^2 + 2.675\ M^3)\ (D_{eq} - D_{eq}^*)^2 \cdot AK2$$

for $D_{eq} > D_{eq}^*$

$$\left(\frac{\theta}{c}\right) = \left(\frac{\theta}{c}\right)^* + (2.80\ M_1 - 8.71\ M_1^2 + 9.36\ M_1^3)\ (D_{eq} - D_{eq})^* \cdot AK2$$

for $D_{eq} < D_{eq}^*$

(2) Input Variables:

| | |
|---|---|
| AK2 | constant, normally one |
| SITACS | ratio or wake momentum thickness to chord at design point |
| AMACH1 | blade inlet Mach number |
| DELDEQ | difference between equivalent diffusion ratio and equivalent diffusion ratio at design point |

(3) Output Variables:

| | |
|---|---|
| WICMTK | ratio of wake momentum thickness to chord |

(4) Usage:

WICMTK (SITACS, AMACH1, DELDEQ, AK2)

FUNCTION WICLOS

(1) Description:

Function WICLOS is called in Subroutine WICGSL and calculates the total pressure loss coefficient from the following equation:

$$\bar{\omega} = \left(\frac{\theta}{c}\right) \frac{2\sigma}{\cos\beta_2} \left(\frac{\cos\beta_1}{\cos\beta_2}\right)^2$$

(2) Input Variables:

| | |
|---|---|
| BET1 | blade inlet flow angle |
| BET2 | blade outlet flow angle |
| SIGUMA | solidity |
| SITA | ratio of momentum thickness to chord |

(3) Output Variable:

| | |
|---|---|
| WICLOS | total pressure loss coefficient |

(4) Usage:

WICLOS (BET1, BET2, SIGUMA, SITA)

SUBROUTINE WICIRS

(1) Description:

Subroutine WICIRS is called at outlet of rotor and performs the calculation of droplet impingement and rebound in rotor passage for small droplet.

(2) Input Variables:

| | |
|---|---|
| ISTAGE | stage number |
| R | blade radius of streamline |
| XW1 | mass fraction of small droplet |
| XG | mass fraction of gaseous phase |
| RHOG1 | density of gaseous phase |
| BETA1 | rotor inlet relative flow angle |
| W1 | rotor inlet relative velocity |

(3) Output Variables:

| | |
|---|---|
| WW1 | amount of water that impacts stagnation |
| WW2 | amount of water that impact aft of blade |
| WW | total amount of water that impact blade |

(4) Usage:

```
CALL WICIRS (ISTAGE, R, XW1, XG, RHOG1, BETA1, W1, WW1, WW2,
             WW)
```

SUBROUTINE WICIRL

(1) Description:

Subroutine WICIRL is called at outlet of rotor and performs the calculation of droplet impingement and rebound in rotor passage for large droplet.

(2) Input Variables:

| | |
|---|---|
| ISTAGE | stage number |
| R | blade radius of streamline |
| XW1 | mass fraction of large droplet |
| RHOG1 | density of gaseous phase |
| BETA1 | rotor inlet relative flow angle |
| W1 | rotor inlet relative velocity |

(3) Output Variables:

| | |
|---|---|
| WW1 | amount of water that impacts upper surface of blade |
| WW2 | amount of water that impact lower surface of blade |
| WW | total amount of water that impact blade surface |

(4) Usage:

```
CALL WICIRL (ISTAGE, R, XW1, XG, RHOG1, BETA1, W1, WW1,
             WW2, WW)
```

SUBROUTINE WICISS

(1) Description:

Subroutine WICISS is claled outlet of stator and performs the calculation of droplet impingement and rebound in stator passage for small droplet.

(2) Input Variables:

| | |
|---|---|
| ISTAGE | stage number |
| R | blade radius at streamline |
| XW | mass fraction of small droplet |
| XG | mass fraction of gaseous phase |
| RHOG1 | density of gaseous phase |

| | |
|---|---|
| ALFA2 | stator inlet absolute flow angle |
| W1 | stator inlet absolute velocity |

(3) Output Variables:

| | |
|---|---|
| WW1 | amount of water that impact stagnation region of blade |
| WW2 | amount of water that impact off of blade |
| WW | total amount of water that impact the blade |

(4) Usage:

```
CALL WICISS (ISTAGE, R, XW, XG, RHOG1, ALFA2, W1, WW1, WW2,
             WW)
```

SUBROUTINE WICISL

(1) Description:

Subroutine WICISL is called at outlet of stator and performs the calculation of droplet impingement and rebound in stator passage for large droplet.

(2) Input Variables:

| | |
|---|---|
| ISTAGE | stage number |
| R | blade radius at streamline |
| XW | mass fraction of large droplet |
| XG | mass fraction of gaseous phase |
| RHOG1 | density of gaseous phase |
| ALFA2 | stator inlet absolute flow angle |
| W1 | stator inlet absolute velocity |

(3) Output Variables:

| | |
|---|---|
| WW1 | amount of water that impact upper surface of blade |
| WW2 | amount of water that impact lower surface of blade |
| WW | total amount of water that impact on blade surface |

(4) Usage:

CALL WICISL (ISTAGE, R, XW, XG, RHOG1, ALFA2, W1, WW1, WW2, WW)

SUBROUTINE WICWAK

(1) Description:

Subroutine WICWAK is called at rotor outlet and stator outlet, and calculates the droplet size of water that is re-entrained at trailing edge of rotor and stator blades.

The size of droplet which is re-entrained into the wake at the blade trailing edge is calculated as follows:

(i) Assume a value for a droplet diameter, d, that is re-entrained into wake.

(ii) Calculate the stability number, SN.

$$SN = \mu_f^2 / \rho_g \sigma d g_c$$

(iii) Calculate the critical Weber number

$$W_e = 12 \left[1 + (SN)^{0.36}\right]$$

(iv) Calculate the largest stable droplet diameter

$$d_{max} = \frac{W_e}{\rho_g} \frac{\sigma g_c}{V_g^2}$$

(v) Compare the assumed droplet diameter with the calculated one. Iterate entire steps until the satisfactory agreement is obtained.

(2) Input Variables:

| | |
|---|---|
| RHOG | density of gaseous phase |
| V | velocity of gaseous phase for small droplet or relative velocity between droplet and gaseous phase for large droplet |

(3) Output Variables:

| | |
|---|---|
| DWAKE | droplet size that re-entrained at trailing edge in ($ft^3$) |
| DWAKEM | droplet size that re-entrained at trailing edge in ($\mu m$) |

(4) Usage:

CALL WICWAK (RHOG, V, DWAKE, DWAKEM)

SUBROUTINE WICHET

(1) Description:

Subroutine WICHET is called at end of stage to perform the heat transfer calculation between water droplet and gaseous phase. The heat transfer rate can be determined from the following equation:

$$\frac{dh}{dt} = h_h A \, (T_g - T_w)$$

where $h_h$ is the heat transfer coefficient, A, the droplet surface area, $T_w$, the droplet surface temperature, and $T_g$, the temperature of the surrounding gas. The heat transfer coefficient can be expressed as follows:

$$h_h = \frac{k_a}{D_d} \cdot Nu$$

where $k_a$ is the thermal conductivity of air, and Nu, the Nusselt number. The Nusselt number can be expressed in terms of the dimensionless groups as follows (Ref. 16):

$$Nu = 2.0 + 0.6 \, (Re)^{0.50} \, (Pr)^{0.33}$$

where Re is the Reynolds number based on the relative velocity between the droplet and the surrounding air, and Pr is the Prandtl number.

After calculating the temperature rise of the water and gas phase due to the work done by the rotor, the heat transfer

calculation is carried out as follows:

(i) Calculate the average droplet diameter, $D_d$.

(ii) Calculate the number of droplets, $N_d$.

$$N_d = \frac{\dot{m}_w}{\rho_w \frac{4}{3} \pi (D_d/2)^3} \cdot \frac{\Delta z}{V_z}$$

where $\dot{m}_w$ is the mass flow rate of water phase, $\rho_w$, the density of water, $V_z$, the axial direction velocity, and $\Delta z$, the axial length of one stage.

(iii) Calculate the droplet surface area, A.

(iv) Calculate the Nusselt number, Nu.

(v) Calculate the heat transfer coefficient, $h_h$.

(vi) Calculate the stage outlet temperature for droplet and gas without heat transfer, that is

$$T_{g_2} = T_{g_1} + (\Delta T_g)_{wk}$$

$$T_{w_2} = T_{w_1} + (\Delta T_w)_{wk}$$

where $(\Delta T_g)_{wk}$ and $(\Delta T_w)_{wk}$ are the temperature rise of gas and water due to work done by rotor.

(vii) Calculate the amount of heat transferred from the gas to the droplet.

$$\Delta_H = h_h A (T_{g2} - T_{w2})$$

(viii) Calculate the temperatures rise of the droplet and the temperature drop of the surrounding gas.

$$(\Delta H_g)_{ht} = H/m_g C_s$$

$$(\Delta H_w)_{ht} = H/m_w C_w$$

where $C_w$ is the specific heat for water and $C_s$ is the humid heat for air-water mixture.

(ix) Calculate the stage outlet temperature for droplet and gas.

$$T_{g2} = T_{g1} + (\Delta T_g)_{wk} - (\Delta T_g)_{ht}$$

$$T_{w2} = T_{w1} + (\Delta T_w)_{wk} + (\Delta T_w)_{ht}$$

(x) Using the temperature calculated in step (ix), repeat the steps (vii) to (ix) until a desired accuracy is obtained.

(2) Input Variables:

| | |
|---|---|
| TG1 | temperature of gaseous phase at stage inlet |
| TG3 | temperature of gaseous phase at stage outlet |
| TW1 | temperature of droplet at stage inlet |
| TW3 | temperature of droplet at stage outlet |
| DAVEN2 | droplet nominal diameter at stage inlet |
| DAVEN | droplet nominal diameter at stage outlet |
| DELZI | length of stage |
| VZ | axial velocity |
| WMASS1 | mass flow rate of water |
| VMASS1 | mass flow rate of vapor |
| AMASS | mass flow rate of dry air |
| CHMASS | mass flow rate of methane |
| CPG | specific heat constant pressure to gaseous phase |
| CPW | specific heat of water |
| RE | Reynolds number based on relative velocity between droplet and gaseous phase |

(3) Output Variables:

| | |
|---|---|
| DELIGH | temperature drop in gaseous phase due to heat transfer between water droplet and gaseous phase |
| DELTWH | temperature rise in droplet due to heat transfer between water droplet and gaseous phase |

(4) Usage:

```
CALL WICHET (TG1, TG3, TW3, DAVEN2, DAVEN, DELZI, VZ, WMASS1,
             VMASS1, AMASS, CHMASS, CPG, CPW, DELIGH, DELTWH,
             RE)
```

SUBROUTINE WICMAS

(1) Description:

Subroutine WICMAS is called at end of stage to perform the mass transfer calculation between water droplet and gas phases.

The mass transfer rate can be calculated by the following equation:

$$\frac{dm}{dt} = h_m A \, (C_{wb} - C_w)$$

where $h_m$ is the mass transfer coefficient, A, the droplet surface area, $C_{wb}$, the water vapor concentration at droplet surface, and $C_w$, the water vapor concentration in fluid flow around droplet.

Since the density represents the mass concentration, and the vapor is almost a perfect gas, the mass transfer rate can be expressed in terms of vapor pressure as follows:

$$\frac{dm}{dt} = h_m \, A \, (\rho_{wb} - \rho_w)$$

or

$$\frac{dm}{dt} = h_m \, A \left( \frac{P_{wb}}{T_{wb}} - \frac{P_w}{T_w} \right) \cdot \frac{1}{R_v}$$

where $R_v$ is the gas constant for water vapor, $P_{wb}$, the vapor pressure at droplet surface, $P_w$, the vapor pressure in fluid flowing around droplet, $T_{wb}$, the vapor temperature at droplet surface, and $T_w$, the vapor temperature in fluid flowing around droplet.

The surface area, A, for the droplet cloud is given by the relation,

$$A = \pi D_d^2 N_d$$

where $D_d$ is the average droplet diameter, and $N_d$, the number of droplets.

The mass transfer coefficient, $h_m$ is expressed as follows:

$$h_m = \frac{D_v}{D_d} \cdot Sh$$

A semi-empirical equation for the diffusion coefficient in gases is given by the following (Ref. 15):

$$D_v = 435.7 \frac{T^{3/2}}{p(V_A^{1/3} + V_V^{1/3})^2} \left(\frac{1}{M_A} + \frac{1}{M_B}\right)^{1/2}$$

where $D_v$ is in square centimeters per second, T is in degree Kelvin, p is the total system pressure in Newtons per square meter, and $V_A$ and $V_B$ are the molecular volumes of constituents A and B as calculated from the atomic volumes. $M_A$ and $M_B$ are the molecular weights of constituents A and B. For water-air systems, the numerical values of $V_A$, $V_B$, $M_A$, and $M_B$ are given as follows:

$V_A = V_{air} = 29.9$ $\qquad$ $M_A = M_{air} = 28.9$

$V_B = M_{water} = 18.8$ $\qquad$ $M_B = M_{water} - 18.0$

When the relative velocity between a single droplet and the surrounding fluid approaches zero, the following relationship is used to determine the mass transfer rate: Sh = 2.0.

Mass transfer rates increase with increase in relative velocity between the droplet and the surrounding air due to the additional mass transfer caused by the convection in the boundary layer around the droplet. The mass transfer coefficient from a spherical droplet can be expressed in terms of dimensionless groups

as follows:

$$Sh = 2.0 + k\ (Re)^x\ (Sc)^y$$

where Re is the Reynolds number based on relative velocity, which expresses the ratio of inertial force to viscous force, and Sc is the Schmidt number, which expressed the ratio of kinetic viscosity to molecular diffusivity.

There is much discussion over the values of x, y, and k. The form most widely applied is the Ranz and Marshall equation (Ref. 16) which is:

$$Sh = 2.0 + 0.6\ (Re)^{0.50}\ (Sc)^{0.33}$$

The procedure for determining the mass transfer rate is as follows.

(i) Calculate the Sherwood number, Sh.

(ii) Calculate the diffusion coefficient, $D_v$.

(iii) Calculate the average droplet size, $D_d$.

(iv) Calculate the mass transfer coefficient, $h_m$.

(v) Calculate the total number of droplets, $N_d$.

(vi) Calculate the total surface area for all droplets.

(vii) Calculate the water vapor pressure at droplet surface, $P_{wb}$, based on the droplet surface temperature, $T_s$.

(viii) Assume the vapor pressure, $p_w$, and set $p_w = (p_w)_a$.

(ix) Calculate the mass transfer rate, $\frac{dm}{dt}$.

(x) Calculate the new value of water mass flow rate.

$$\dot{m}_w = \dot{m}_v = \frac{dm}{dt}$$

(xi) Calculate the new value of vapor mass flow rate.

$$\dot{m}_v = \dot{m}_v + \frac{dm}{dt}$$

(xii) Calculate the specific humidity, W.

$$W = \dot{m}_v/\dot{m}_a$$

where $\dot{m}_a$ is the air mass flow rate.

(xiii) Calculate the vapor pressure.

(xiv) Compare the calculated value, $(p_w)_c$, with the assumed value $(p_w)_a$. If $(p_w)_c$ agrees reasonably well with the assumed value $(p_w)_c$ proceed to step (xv). Otherwise, steps (viii) to (xiv) should be repeated.

(xv) Using the determined $p_w$, the mass transfer rate is calculated. Also, the specific humidity can be determined by the following equation:

$$W = 0.6219 \frac{P_w}{P - P_w}$$

(2) Input Variables:

| | |
|---|---|
| HW1 | specific humidity at stage inlet |
| TW1 | temperature of droplet at stage inlet |
| TW2 | temperature of droplet at stage outlet |
| PP1 | pressure of gaseous phase stage inlet |
| PP2 | pressure of gaseous phase at stage outlet |
| TG1 | temperature of gaseous phase at stage inlet |
| TG2 | temperature of gaseous phase at stage outlet |
| DZ | length of stage |
| VZ | axial velocity |
| DDAVE1 | droplet nominal diameter at stage inlet |
| DDAVE2 | droplet nominal diameter at stage outlet |
| AMASS | mass flow rate of air |
| RE | Reynolds number based on relative velocity between droplet and gaseous phase |
| VMASS1 | mass flow rate of water vapor at stage inlet |
| WMASS1 | mass flow rate of water droplet at stage outlet |

(3) Output Variables:

| | |
|---|---|
| HW2 | specific humidity at stage outlet |
| VMASS2 | mass flow rate of water vapor at stage outlet |
| WMASS2 | mass flow rate of water droplet at stage outlet |
| DMDTAV | average mass transfer rate across stage |

(4) Usage:

```
CALL WICMAS (HW1, TW1, TW2, PP1, PP2, TG1, TG2, DZ, PWB1,
             PWB2, PW1, PW2, VZ, DDAVE1, DDAVE2, HW2, VMASS1,
             VMASS2, WMASS1, WMASS2, DMDTAV, AMASS, RE)
```

FUNCTION WICMTR

(1) Description:

Function WICMTR is called in Subroutine WICMTR and calculates the mass transfer rate.

(2) Input Variables:

| | |
|---|---|
| TTG | temperature of gaseous phase |
| TTW | temperature of water droplet |
| PPP | pressure of gaseous phase |
| DAVW | droplet nominal diameter |
| VZ | axial velocity |
| DZ | length of stage |
| MMASS | mass flow rate of mixture |
| PW | vapor pressure |
| RE | Reynolds number based on relative velocity between droplet and gaseous phase |

(3) Output Variable:

| | |
|---|---|
| DMDT | mass transfer rate |

(4) Usage:

```
WICMTR (TTG, TTW, PPP, DAVE, VZ, DZ, MMASS, PW, RE)
```

FUNCTION WICPWB

(1) Description:

Function WICPWB calculates the saturation pressure for water vapor is a function at temperature as follows:

$$\log_{10} p_s = A - B/T$$

where units are ($Kg/cm^2$) for $p_s$ and (K) for T. The values of constant A and B are given as follows:

A = 5.97780, B = 2224.4 when 20° C < T < 100°C
A = 5.64850, B = 2101.1 when 100°C < T < 200°C
A = 5.45142, B = 2010.8 when 200°C < T < 350°C

(2) Input Variable:

| | |
|---|---|
| TWB | temperature of gaseous phase |

(3) Output Variable:

| | |
|---|---|
| WICPWB | saturation pressure for water vapor |

(4) Usage:

WICPWB (TWB)

FUNCTION WICNEW

(1) Description:

Function WICNEW is used to estimate the new trial value in the iteration procedure.

(2) Input Variables:

| | |
|---|---|
| X1 | first trial value |
| Y1 | calculated value corresponds to X1 |
| X2 | second trial value |
| Y2 | calculated value corresponds to X2 |

(3) Output Variable:

| | |
|---|---|
| WICNEW | new trial value |

(4) Usage:

WICNEW (X1, Y1, X2, Y2)

FUNCTION WICTAN

(1) Description:

Function WICTAN(X) is used to obtain the ratio of SINE(X) to COSINE(X), that is, TAN(X).

(2) Input VAriable:

| | |
|---|---|
| X | angle |

(3) Output Variable:

| | |
|---|---|
| WICTAN | value of TAN(X) |

(4) Usage:

WICTAN(X)

FUNCTION WICBPT

(1) Description:

Function WICBPT calculates the temperature at boiling point.

(2) Input Variables:

| | |
|---|---|
| TSTAG | temperature |
| PSTAG | pressure |

(3) Output Variable:

| | |
|---|---|
| WICBPT | temperature at boiling point |

(4) Usage:

WICBPT (TSTAG, PSTAG)

FUNCTION WICSH

(1) Description:

Function WICSH calculates the specific humidity.

(2) Input Variables:

| | |
|---|---|
| TSTAG | temperature |
| PSTAG | pressure |

(3) Output Variable:

| | |
|---|---|
| WICSH | specific humidity |

(4) Usage:

WICSH (TSTAG, PSTAG)

SUBROUTINE WICSIZ

(1) Description:

Subroutine WICSIZ is called at outlet of rotor and stator to determine the nominal droplet sizes. It is assumed that two kinds of droplets exist at inlet of compressor; namely, small droplet and large droplet. However, at trailing edge of each blade, the new droplets are re-entrained into blade wake. The droplets which are larger than DLIMIT are treated as large droplets and droplets which are smaller than DLIMIT are treated as small droplets. Each droplet size weighted based on its mass fraction in determining the nominal droplet size. Therefore, at outlet of each blade row, Subroutine WICSIZ gives two nominal diameters; one for small droplet and one for large droplet. It may be noted that only two classes of droplets are recognized in the model.

(2) Input Variables:

| | |
|---|---|
| WMASSL | mass flow rate of large droplet |
| WMASSS | mass flow rate of small droplet |
| AMING1 | amount of water which is to be re-entrained into wake, originally small droplet |
| AMING2 | amount of water which is to be re-entrained into wake, originally large droplet and upper part |
| AMING3 | amount of water which is to be re-entrained into wake, originally large droplet and lower part |
| DL | droplet nominal size for large droplet before impingement |
| DS | droplet nominal size for small droplet before impingement |
| D1 | droplet size associated with AMING1 |

| | |
|---|---|
| D2 | droplet size associated with AMING2 |
| D3 | droplet size associated with AMING3 |
| DLIMIT | largest droplet diameter which can be treated as small droplet |

(3) Output Variables:

| | |
|---|---|
| AMSLL | mass flow rate of small droplet after re-entrainment |
| AMLGE | mass flow rate of large droplet after re-entrainment |
| DSLL | droplet nominal size for small droplet |
| DLGE | droplet nominal size for large droplet |

(4) Usage:

```
CALL WICSIZ (WMASSL, WMASSS, AMING1, AMING2, AMING3, DL, DS,
             D1, D2,  D3, DLIMIT, AMSLL, AMLGE, DSLL, DLGE)
```

SUBROUTINE WICPRP

(1) Description:

Subroutine WICPRP determines the flow properties such as gas constant specific, heat ratio, and specific heat at constant pressure for the gaseous mixture. The working equations are as follows:

$$R_{mix} = x_a \cdot R_a + x_v \cdot R_v + x_c \cdot R_c$$

$$c_{pmix} = x_a \cdot c_{pa} + x_v \cdot c_{pv} + x_c \cdot c_{pc}$$

$$\gamma_{mix} = \left(1.0 - \frac{R_{mix}}{c_{pmix} J}\right)^{-1}$$

where

$x_a$ = mass fraction of air in gaseous mixture
$x_v$ = mass fraction of water vapor in gaseous mixture
$x_c$ = mass fraction of methane in gaseous mixture

$$x_a + x_v + x_c = 1$$

$R_a$ = gas constant of air
$R_v$ = gas constant of water vapor
$R_c$ = gas constant of methane
$R_{mix}$ = gas constant of mixture
$c_{pa}$ = specific heat constant pressure for air
$c_{pv}$ = specific heat constant pressure for water vapor
$c_{pc}$ = specific heat at constant pressure for methane
$c_{pmix}$ = specific heat at constant pressure for mixture
$r_{mix}$ = specific heat ratio for mixture

(2) Input Variables:

| | |
|---|---|
| XAIR | mass fraction of air in gaseous mixture |
| XH2O | mass fraction of water vapor in gaseous mixture |
| XCH4 | mass fraction of methane in gaseous mixture |
| T | temperature of gaseous mixture |

(3) Output Variables:

| | |
|---|---|
| RMIX | gas constant of gaseous mixture |
| CPMIX | specific heat constant pressure for gaseous mixture |
| GAMMA | specific heat ratio of gaseous mixture |
| G1 | value for GAMMA/(GAMMA - 1.0) |
| G2 | value for (GAMMA - 1.0)/2.0 |
| G3 | value for -1.0/(GAMMA - 1.0) |

(4) Usage:

```
CALL WICPRP (XAIR, XH2O, XCH4, T, RMIX, CPMIX, GAMMA, G1, G2,
             G3)
```

FUNCTION WICCPA

(1) Description:

Function WICCPA calculates the specific heat at constant pressure for air as a function of temperature as follows (Ref. 17):

$$c_p = (a + aT = cT^2 + dT^3 + eT^4)R$$

where units are (J/kg - K) for $c_p$, (K) for T, and (J/kg - K) for R. The values of coefficients a, b, c, d, and e are as follows:

$a = 3.65359$
$b = -1.33736 \times 10^{-3}$
$c = 3.29421 \times 10^{-6}$
$d = -1.91142 \times 10^{-9}$
$e = 0.275462 \times 10^{-12}$

(2) Input Variable:

| | |
|---|---|
| T | temperature |

(3) Output Variable:

| | |
|---|---|
| WICCPA | specific heat constant pressure |

(4) Usage:

WICCPA (T)

FUNCTION WICCPH

(1) Description:

Function WICCPH calculates the specific heat at constant pressure for water vapor as a function of temperature as follows (Ref. 17):

$$c_p = (a + bT + cT^2 + dT^3 + eT^4)R$$

where units are (J/kg - K) for $c_p$, (K) for T, and (J/kg - K) for R. The values of coefficients a, b, c, d, and e are as follows:

$a = 4.07013$
$b = -1.10845 \times 10^{-3}$
$c = 4.15212 \times 10^{-6}$
$d = -2.96374 \times 10^{-9}$
$e = 0.807021 \times 10^{-12}$

(2) Input Variable:

T temperature

(3) Output Variable:

WICCPH specific heat at constant pressure

(4) Usage:

WICCPH (T)

FUNCTION WICCPC

(1) Description:

Function WICCPC calculates the specific heat at constant pressure for methane as a function of temperature as follows (Ref. 17):

$$c_p = (a + bT + cT^2 + dT^3 + eT^4)R$$

where units are (J/kg - k) for $c_p$, (K) for T, and (J/kg - K) for R. The values of coefficients a, b, c, d, and e are as follows:

$a = 3.82619$
$b = -3.97946 \times 10^{-3}$
$c = 24.5583 \times 10^{-6}$
$d = -22.7329 \times 10^{-9}$
$e = 6.92760 \times 10^{-12}$

(2) Input Variable:

T temperature

(3) Output Variable:

WICCPC specific heat constant pressure

(4) Usage:

WICCPC (T)

# APPENDIX 4

# PROGRAM SOURCE LIST

```
                MNFFTN(E=3)

 1.   000000B        PROGRAM MAIN(INPUT,OUTPUT,TAPE5=INPUT,TAPE6=OUTPUT)
              C+++++++++++++++++++++++++++++++++++++++++++++++++++++++++++++++++++
              C PROGRAM PURDU-WINCOF
              C+++++++++++++++++++++++++++++++++++++++++++++++++++++++++++++++++++++
              C ABSTRACT:
              C THIS PROGRAM CODE HAS BEEN PRODUCED FOR THE STUDY OF AN AXIAL FLOW
              C FAN-COMPRESSOR PERFORMANCE DURING A GAS-WATER DROPLET MIXTURE FLOW.
              C THE MIXTURE MAY CONSIST OF TWO TYPES OF DROPLET SIZES AND THREE
              C KINDS OF GASEOUS PHASES.THIS PROGRAM CODE IS WRITTEN ESPECIALLY
              C FOR AIR+WATER-VAPOR+METHANE+SMALL DROPLET+LARGE DROPLET.
              C THIS FORTRAN COMPUTER CODE CAN PREDICT THE DESIGN AND OFF-DESIGN
              C PERFORMANCE UTILIZING A STAGE-BY-STAGE CALCULATION.
              C THIS COMPUTER PROGRAM CODE HAS BEEN DEVELOPED AT PURDUE UNIVERSITY,
              C THERMAL SCIENCE AND PROPULSION CENTER,WEST LAFAYETTE,INDIANA 47906.
              C THE AUTHOR OF THIS PROGRAM CODE IS TOSHIAKI TSUCHIYA,
              C PURDUE UNIVERSITY , DEPARTMENT OF AERONAUTICS AND ASTRONAUTICS,
              C GRADUATE INSTRUCTOR IN RESEARCH.
              C ++++++++++++++++++++++++++++++++++++++++++++++++++++++++++++++++++++
              C+++++++++++++++++++++++++++++++++++++++++++++++++++++++++++++++++++++
 2.   002131B        REAL ND,NU,KA,M,MMASS,MMASS1
 3.   002131B        REAL MMASSO
 4.   002131B        COMMON JPERFM,RHOG(3),RERUP,RERLOW,RESUP,RESLOW
                    ^,PREB,RRTIP(20),SRTIP(20),AAA1,AAA2,AAA3,SAREA(20),SAREAS(20)
                    ^,P(3),TG(3),XA,XV(3),XCH4,XW(3),XWW(3),XWT(3),TW(3),TWW(3)
                    ^,OMEGS(20),OMEGR(20),GAPR(20),GAPS(20)
                    ^,RRHUB(20) , RC(20) , RBLADE(20) , STAGER(20)
                    ^,SRHUB(20) , SC(20) , SBLADE(20),STAGES(20)
                    ^,SIGUMR(20) , BET1SR(20) , BET2SR(20) , AINCSR(20) , ADEVSR(20)
                    ^,SIGUMS(20) , BET1SS(20) , BET2SS(20) , AINCSS(20) , ADEVSS(20)
                    ^,UTIPG(20),UTIP(20),UTIPD(20),UOU(20),UMEAN(20),UHUB(20),U(20),FAI
                    ^,AREA(20),AREAS(20),UU2(20),UTIP2(20),UMEAN2(20),UHUB2(20),IPRINT
                    ^,ICENT,IICENT,FMR1(20),FMA2(20),IDESIN,FAID
                    ^,NS,NSF,NSLPC,BYPASS,NS1,RT(20),RM(20),RH(20),ST(20),SM(20),SH(20)
                    ^,DSMASS,AAREA(20),AAREAS(20),PR12D(20),PR13D(20),ETARD(20)
                    ^,DR(20),DS(20),DEQR(20),DEQS(20),BLOCK(20),BLOCKS(20)
                    ^,BET1MR(20),BET2MR(20),BET1MS(20),BET2MS(20),RADI1(20),RADI2(20)
                    ^,FAIRIN(20),FAIOUT(20),ETASG(20),PSID(20),TAUD(20),SITADR(20)
                    ^,SITADS(20),WWD(20),VVD(20)
 5.   002131B        DIMENSION D(20,3) , XD(20,3) , XXD(20,3),
                    ,WS(3),WMASS(3),VMASS(3),RHOA(3),RHOM(3),TB(3)
 6.   002131B        DIMENSION TD(20),DELZ(20),ETAA(20)
 7.   002131B        DIMENSION XXA(3),XXV(3),DAVE(20)
 8.   002131B        DIMENSION TDEW(3)
 9.   002131B        DIMENSION DDAVE(20),WWMASS(3),WTMASS(3)
10.   002131B        DIMENSION TMASS(3),GMASS(3),XAIR(3),XMETAN(3),XGAS(3),FAISTL(20)
11.   002131B        DIMENSION XBLEED(20)
12.   002131B        DIMENSION PRREF(20),TRREF(20),ETAREF(20)
              C ++++++++++++++++++++++++++++++++++++++++++++++++++++++++++++++++++++
              C INPUT DATA
              C NS           NUMBER OF STAGE (TOTAL)
              C NSF          NUMBER OF STAGE(FAN)
              C NSLPC        NUMBER OF STAGE ( LOW PRESSURE COMPRESSOR )
              C NSHPC        NUMBER OF STAGE ( HIGH PRESSURE COMPRESSOR )
              C RRHUB(I)     ROTOR INLET RUDIUS AT HUB FOR I-TH STAGE IN INCH
              C RC(I)       ROTOR CHORD FOR I-TH STAGE IN INCH
              C RBLADE(I)    NUMBER OF ROTOR BLADE FOR I-TH STAGE
```

```
C STAGER(I)    ROTOR STAGER ANGLE FOR I-TH STAGE IN DEGREE.
C SRHUB(I)     STATOR INLET RUDIUS AT HUB FOR I-TH STAGE IN INCH
C SC(I)        STATOR CHORD FOR I-TH STAGE IN INCH(I=NS+1,IGV)
C SBLADE(I)    NUMBER OF STATOR BLADE FOR I-TH STAGE (I=NS+1 FOR IGV)
C STAGES(I)    STATOR STAGER ANGLE FOR I-TH STAGE IN DEGREE (I=NS+1 FOR
C              IGV)
C SIGUMR(I)    SOLIDITY OF ROTOR FOR I-TH STAGE
C SIGUMS(I)    SOLIDITY OF STATOR FOR I-TH STAGE
C BET2SS(I)    STATOR OUTLET ABSOLUTE FLOW ANGLE AT DESIGN POINT FOR I-TH
C              STAGE IN DEGREE
C FNF          FRACTION OF DESIGN CORRECTED ROTOR SPEED FOR A PARTICULAR
C              SPEED
C XDIN         INITIAL WATER CONTENT (MASS FRACTION) OF SMALL DROPLET
C XDDIN        INITIAL WATER CONTENT (MASS FRACTION)  OF DARGE DROPLET
C ICENT        INDEX FOR CENTRIFUGAL CALCULATION (ICENT=1 WHEN XDIN=0
C              OTHERWISE ICENT=2)
C IICENT       SAME AS ICENT
C              ICENT=3,IICENT=3: NO HEAT AND MASS TRANSFER
C              ICENT=4,IICENT=4: NO CENTRIFUGAL ACTION
C              ICENT=5,IICENT=5: NO HEAT AND MASS TRANSFER;AND
C                                NO CENTRIFUGAL ACTION
C               ICENT=6,IICENT=6: NO MASS TRANSFER
C               ICENT=7,IICENT=7: NO MASS TRANSFER;AND
C                                 NO CENTRIFUGAL ACTION
C ICENTV       INDEX FOR CENTRIFUGAL ACTION OF VAPOR
C              ICENTV=0: VAPOR IS CENTRIFUGED
C              ICENTV=1: VAPOR IS NOT CENTRIFUGED
C TOG          TOTAL TEMPERATURE AT COMPRESSR INLET IN RANKIN
C TOW          WATER DROPLET TEMPERATURE AT COMPRESSOR INLET IN RANKIN
C PO           TOTAL PRESSURE AT COMPRESSOR INLET IN LB/FT**2
C DIN          INITIAL WATER DROPLET DIAMETER IN MICRON(SMALL DROLLET)
C DDIN         INITIAL WATER DROPLET DIAMETER IN MICRON(LARGE DROPLET)
C FND          ROTOR ROTATIONAL SPEED AT DESIGN SPEED IN RPM
C                  (FAN AND LOW PRESSURE COMPRESSOR )
C FNDLPC       ROTOR ROTATIONAL SPEED AT DESIGN SPEED IN RPM
C                  ( LOW PRESSURE COMPRESSOR )
C FNDHPC       ROTOR ROTATIONAL SPEED AT DESIGN SPEED IN RPM
C                  ( HIGH PRESSURE COMPRESSOR )
C T01D         DESIGN VALUE FOR COMPRESSOR INLET TOTAL TEMPERATURE
C P01D         DESIGN VALUE FOR COMPRESSOR INLET TOTAL PRESSURE
C XCH4         INITIAL METHANE CONTENT
C RHUMID       INITIAL RELATIVE HUMIDITY
C FMWA         MOLECOLAR WEIGHT OF AIR
C FMWV         MOLECULAR WEIGHT OF WATER VAPOR
C FMWC         MOLECULAR WEIGHT OF METHANE
C PREB         PERCENT OF WATER THAT REBOUND AFTER IMPINGEMENT
C DLIMIT       MAX. DIAMETER FOR SMALL DROPLET
C GAPR(I)      GAP BETWEEN I TH STAGE ROTOR AND I-1 TH STAGE STATOR
C GAPS(I)      GAP BETWEEN I TH STAGE STATOR AND I-1 TH STAGE ROTOR
C RRTIP(I)     ROTOR INLET TIP RADIUS FOR I-TH STAGE
C SRTIP(I)     STATOR INLET TIP RADIUS FOR I-TH STAGE
C IRAD         INDEX FOR RADIUS AT WHICH CALCULATION IS CARRIED OUT
C                IRAD=1: TIP
C                IRAD=2: MEAN
C                IRAD=3: HUB
C                IRAD=4: MEAN FOR FAN AND TIP FOR LPC,HPC
C RT(I)        ROTOR INLET RADIUS AT WHICH TIP PERFORMANCE CALCULATION
C              IS CARRIED OUT.
C RM(I)        ROTOR INLET RADIUS AT WHICH MEAN LINE PERFORMANCE
C              CALCULATION IS CARRIED OUT.
```

```
C RH(I)        ROTOR INLET RADIUS AT WHICH HUB PERFORMANCE CALCULATION
C              IS CARRIED OUT.
C ST(I)        STATOR INLET RADIUS AT WHICH TIP PERFORMANCE CALCULATION
C              IS CARRIED OUT.
C SM(I)        STATOR INLET RADIUS AT WHICH MEAN LINE PERFORMANCE
C              CALCULATION IS CARRIED OUT.
C SH(I)        STATOR INLET RADIUS AT WHICH HUB PERFORMANCE CALCULATION
C              IS CARRIED OUT.
C BLOCK(I)     BLOCKAGE FACTOR FOR I-TH STAGE ROTOR
C BLOCKS(I)    BLOCKAGE FACTOR FOR I-TH STAGE STATOR
C IDESIN       INDEX FOR OUTPUT
C                IDESIN=1: BOTH STAGE AND OVERALL PERFORMANCE MAY BE
C                          PRINTED OUT
C                IDESIN=2: ONLY OVERALL PERFORMANCE MAY BE PRINTED OUT
C JCENT        INDEX FOR CENTRIFUGAL CALCULATION OF LARGE DROPLET
C                JCENT=0: LARGE DROPLETS IN ROTOR FREE STREAM ARE NOT
C                         CENTRIFUGED.
C                JCENT=1: LARGE DROPLETS IN ROTOR FREE STREAM ARE
C                         CENTRIFUGED.
C BET1MR(I)    BLADE METAL ANGLE AT ROTOR INLET FOR I-TH STAGE
C BET2MR(I)    BLADE METAL ANGLE AT ROTOR OUTLET FOR I-TH STAGE
C BET1MS(I)    BLADE METAL ANGLE AT STATOR INLET FOR I-TH STAGE
C BET2MS(I)    BLADE METAL ANGLE AT STATOR OUTLET FOR I-TH STAGE
C DSMASS       DESIGN MASS FLOW RATE FOR FAN PART (STREAMTUBE)
C BYPASS       BYPASS RATIO
C PR12D(I)     DESIGN TOTAL PRESSURE RATIO FOR I-TH STAGE ROTOR
C PR13D(I)     DESIGN TOTAL PRESSURE RATIO FOR I-TH STAGE
C ETARD(I)     DESIGN ADIABATIC EFFICIENCY FOR I-TH STAGE ROTOR
C SAREA(I)     FLOW AREA AT I-TH STAGE ROTOR INLET (STREAMTUBE)
C SAREAS(I)    FLOW AREA AT I-TH STAGE STATOR INLET (STREAMTUBE)
C++++++++++++++++++++++++++++++++++++++++++++++++++++++++++++++++++++++++
002131B        READ(5,99) NS , NSF, NSLPC, NSHPC
003023B     99 FORMAT(4I2)
003023B        IF(NSF.EQ.0) NS1=NS+1
003026B        IF(NSF.GT.0) NS1=NSF+NSLPC+NSHPC+1
003032B        IF(NSF.GT.0) NS=NSF+NSLPC+NSHPC
003036B        READ(5,100) (RRHUB(I),I=1,NS)
003046B    100 FORMAT (16F5.3)
003046B        READ(5,111)(RC(I),I=1,NS)
003056B    111 FORMAT(16F5.3)
003056B        READ(5,112) (RBLADE(I),I=1,NS)
003066B    112 FORMAT(16F5.2)
003066B        READ(5,113)(STAGER(I) ,I=1,NS)
003076B    113 FORMAT(16F5.2)
003076B        READ(5,114)(SRHUB(I),I=1,NS1)
003106B    114 FORMAT(16F5.3)
003106B        READ(5,115) (SC(I),I=1,NS1)
003116B    115 FORMAT(16F5.3)
003116B        READ(5,116)(SBLADE(I),I=1,NS1)
003126B    116 FORMAT(16F5.2)
003126B        READ(5,140) (STAGES(I),I=1,NS1)
003136B    140 FORMAT(16F5.2)
003136B        READ(5,117)(SIGUMR(I),I=1,NS)
003146B    117 FORMAT(16F5.3)
003146B        READ(5,122)(SIGUMS(I) ,I=1,NS1)
003156B    122 FORMAT(16F5.3)
003156B        READ(5,124)(BET2SS(I),I=1,NS1)
003166B    124 FORMAT(16F5.2)
003166B        READ(5,127) FNF
003172B    127 FORMAT(F8.2)
```

```
 42.   003172B          READ(5,128) XDIN,ICENT,XDDIN,IICENT,ICENTU
 43.   003202B      128 FORMAT(F5.3,I1,F5.3,I1,I1)
 44.   003202B          READ(5,129) TOG,TOW,PO
 45.   003210B      129 FORMAT(3F7.2)
 46.   003210B          READ(5,130) DIN,DDIN
 47.   003215B      130 FORMAT(2F6.1)
 48.   003215B          READ(5,132) FND,T01D,P01D, FNDLPC, FNDHPC
 49.   003225B      132 FORMAT(F7.1,2F7.2, 2F7.1)
 50.   003225B          READ(5,133) XCH4,RHUMID
 51.   003232B      133 FORMAT(F5.3,F10.5)
 52.   003232B          READ(5,134) FMWA,FMWV,FMWC
 53.   003240B      134 FORMAT(3F7.3)
 54.   003240B          READ(5,135) PREB,DLIMIT
 55.   003245B      135 FORMAT(F5.1,F7.1)
 56.   003245B          READ(5,141) (GAPR(I),I=1,NS)
 57.   003255B      141 FORMAT(11F7.5)
 58.   003255B          READ(5,142) (GAPS(I),I=1,NS)
 59.   003265B      142 FORMAT(11F7.5)
 60.   003265B          READ(5,146) (RRTIP(I),I=1,NS)
 61.   003275B      146 FORMAT(13F6.3)
 62.   003275B          READ(5,147) (SRTIP(I),I=1,NS1)
 63.   003305B      147 FORMAT(13F6.3)
 64.   003305B          READ(5,1491) IRAD
 65.   003311B     1491 FORMAT(I1)
 66.   003311B          READ(5,1492) (RT(I),I=1,NS)
 67.   003321B     1492 FORMAT(16F5.3)
 68.   003321B          READ(5,1493) (RM(I),I=1,NS)
 69.   003331B     1493 FORMAT(16F5.3)
 70.   003331B          READ(5,1494) (RH(I),I=1,NS)
 71.   003341B     1494 FORMAT(16F5.3)
 72.   003341B          READ(5,1495) (ST(I),I=1,NS)
 73.   003351B     1495 FORMAT(16F5.3)
 74.   003351B          READ(5,1496) (SM(I),I=1,NS)
 75.   003361B     1496 FORMAT(16F5.3)
 76.   003361B          READ(5,1497) (SH(I),I=1,NS)
 77.   003371B     1497 FORMAT(16F5.3)
 78.   003371B          READ(5,1498) (BLOCK(I),I=1,NS)
 79.   003401B     1498 FORMAT(16F5.3)
 80.   003401B          READ(5,1499) (BLOCKS(I),I=1,NS1)
 81.   003411B     1499 FORMAT(16F5.3)
 82.   003411B          READ(5,1500) IDESIN,JCENT
 83.   003416B     1500 FORMAT(2I1)
 84.   003416B          READ(5,1502) (BET1MR(I),I=1,NS)
 85.   003426B     1502 FORMAT(16F5.2)
 86.   003426B          READ(5,1503) (BET2MR(I),I=1,NS)
 87.   003436B     1503 FORMAT(16F5.2)
 88.   003436B          READ(5,1504) (BET1MS(I),I=1,NS1)
 89.   003446B     1504 FORMAT(16F5.2)
 90.   003446B          READ(5,1505) (BET2MS(I),I=1,NS1)
 91.   003456B     1505 FORMAT(16F5.2)
 92.   003456B          READ(5,1506) DSMASS,  BYPASS
 93.   003463B     1506 FORMAT(2F10.6)
 94.   003463B          READ(5,1507) (PR12D(I),I=1,NS)
 95.   003473B     1507 FORMAT(16F5.3)
 96.   003473B          READ(5,1508) (PR13D(I),I=1,NS)
 97.   003503B     1508 FORMAT(16F5.3)
 98.   003503B          READ(5,1509) (ETARD(I),I=1,NS)
 99.   003513B     1509 FORMAT(16F5.3)
100.   003513B          READ(5,1511) (SAREA(I),I=1,NS)
101.   003523B     1511 FORMAT(8F10.7)
```

```
102.   003523B        READ(5,1512) (SAREAS(I),I=1,NS1)
103.   003533B   1512 FORMAT(8F10.7)
               C ++++++++++++++++++++++++++++++++++++++++++++++++++++++++++++++++++
               C OTHER INPUT DATA
104.   003533B        IF(RHUMID.LT.1.0E-5) RHUMID=1.0E-5
105.   003536B        IPRINT=1
106.   003536B        RU=1545.3
107.   003537B        RHOW=62.54
108.   003541B        CPW=1.000
109.   003542B        WKDONE=1.0
110.   003543B        AAAIGV=SAREAS(NS1)
111.   003545B        AK1=1.0
112.   003546B        AK2=1.0
113.   003547B        AK3=1.0
114.   003550B        DO 153 I=1,NS
115.   003552B        FMR1(I)=0.6
116.   003552B        FMA2(I)=0.6
117.   003553B    153 CONTINUE
118.   003555B        FNFN=FNF*100.0
119.   003556B        RA=RU/FMWA
120.   003560B        RV=RU/FMWV
121.   003561B        RCH=RU/FMWC
122.   003563B        DELV=0.0
123.   003564B        DELVU2=10.0
124.   003565B        DELVL2=10.0
125.   003565B        GC=32.0
126.   003567B        AJ=778.16
127.   003570B        PAI=3.1415926
128.   003572B        DO 150 I=1,NS
129.   003574B        AAREA(I)=PAI*((RRTIP(I)/12.0)**2-(RRHUB(I)/12.0)**2)*BLOCK(I)
130.   003601B        AAREAS(I)=PAI*(SRTIP(I)**2-SRHUB(I)**2)/144.0*BLOCKS(I)
131.   003606B        DELZ(I)=(RC(I)+SC(I))/12.0
132.   003611B    150 CONTINUE
133.   003613B        NS1=NS+1
134.   003614B        AAREAS(NS1)=PAI*(SRTIP(NS1)**2-SRHUB(NS1)**2)/144.0*BLOCKS(NS1)
135.   003621B        AAAR1T=AAREA(1)
136.   003623B         DO 152 I=1,NS
137.   003625B        AREA(I)=SAREA(I)
138.   003625B        AREAS(I)=SAREAS(I)
139.   003627B    152 CONTINUE
140.   003631B        AREAS(NS1)=SAREAS(NS1)
141.   003632B        FN=FND*FNF*SQRT(TOG/518.7)
142.   003641B        P01FAN=PO
143.   003642B        T01FAN=TOG
144.   003643B        OT01G=TOG
145.   003644B        OT01D=TOW
146.   003646B        OP01=PO
147.   003647B        CRPM=FNF*FND
148.   003650B        FNDFAN=FND
149.   003651B        DO 151 I=1,NS
150.   003653B        IF (I.GT.NSF.AND.I.LE.(NSF+NSLPC)) FND=FNDLPC
151.   003662B        IF (I.GT.(NSF+NSLPC)) FND=FNDHPC
152.   003666B        UTIP(I)=RT(I)/12.0*2.0*PAI*FND/60.0
153.   003671B        UTIPG(I)=RRTIP(I)/12.0*2.0*PAI*FND/60.0
154.   003675B        UTIP2(I)=ST(I)/12.0*2.0*PAI*FND/60.0
155.   003701B        UTIPD(I)=RT(I)/12.0*2.0*PAI*FND/60.0
156.   003705B        UOU(I)=(UTIP(I)/UTIPD(I))**2
157.   003707B        UMEAN(I)=RM(I)/12.0*2.0*PAI*FND/60.0
158.   003713B        UMEAN2(I)=SM(I)/12.0*2.0*PAI*FND/60.0
159.   003717B        UHUB(I)=RH(I)/12.0*2.0*PAI*FND/60.0
```

```
160.   003723B        UHUB2(I)=SH(I)/12.0*2.0*PAI*FND/60.0
161.   003727B        IF(IRAD.EQ.1) U(I)=UTIP(I)
162.   003734B        IF(IRAD.EQ.2) U(I)=UMEAN(I)
163.   003740B        IF(IRAD.EQ.3) U(I)=UHUB(I)
164.   003743B        IF(IRAD.EQ.4.AND.I.LE.NSF) U(I)=UMEAN(I)
165.   003750B        IF(IRAD.EQ.4.AND.I.GT.NSF) U(I)=UTIP(I)
166.   003756B        IF(IRAD.EQ.1) UU2(I)=UTIP2(I)
167.   003762B        IF(IRAD.EQ.2) UU2(I)=UMEAN2(I)
168.   003765B        IF(IRAD.EQ.3) UU2(I)=UHUB2(I)
169.   003770B        IF(IRAD.EQ.4.AND.I.LE.NSF) UU2(I)=UMEAN2(I)
170.   003775B        IF(IRAD.EQ.4.AND.I.GT.NSF) UU2(I)=UTIP2(I)
171.   004003B        IF(IRAD.EQ.1) RADI1(I)=RT(I)
172.   004006B        IF(IRAD.EQ.1) RADI2(I)=ST(I)
173.   004011B        IF(IRAD.EQ.2) RADI1(I)=RM(I)
174.   004014B        IF(IRAD.EQ.2) RADI2(I)=SM(I)
175.   004017B        IF(IRAD.EQ.3) RADI1(I)=RH(I)
176.   004022B        IF(IRAD.EQ.3) RADI2(I)=SH(I)
177.   004025B        IF(IRAD.EQ.4.AND.I.LE.NSF) RADI1(I)=RM(I)
178.   004032B        IF(IRAD.EQ.4.AND.I.LE.NSF) RADI2(I)=SM(I)
179.   004040B        IF(IRAD.EQ.4.AND.I.GT.NSF) RADI1(I)=RT(I)
180.   004045B        IF(IRAD.EQ.4.AND.I.GT.NSF) RADI2(I)=ST(I)
181.   004053B    151 CONTINUE
             C ++++++++++++++++++++++++++++++++++++++++++++++++++++++++++++++++++++++
182.   004055B        FND=FNDFAN
             C PRINT OUT OF INPUT DATA
183.   004056B        WRITE(6,1600)
184.   004062B   1600 FORMAT(1H1,5X,≠***************************** INPUT DATA **********
                     $***************************≠)
185.   004062B        WRITE(6,1610) NS
186.   004066B   1610 FORMAT(1H0,1X,≠NS(NUMBER OF STAGE)=≠,I2)
187.   004066B        IF(IRAD.EQ.1) WRITE(6,1604)
188.   004073B   1604 FORMAT(1H ,1X,≠PERFORMANCE AT TIP≠)
189.   004073B        IF(IRAD.EQ.2) WRITE(6,1605)
190.   004100B   1605 FORMAT(1H ,1X,≠PERFORMANCE AT MEAN≠)
191.   004100B        IF(IRAD.EQ.3) WRITE(6,1606)
192.   004105B   1606 FORMAT(1H ,1X,≠PERFORMANCE AT HUB≠)
193.   004105B        IF(IRAD.EQ.4) WRITE(6,1613)
194.   004112B   1613 FORMAT(1H ,1X,≠PERFORMANCE AT MEAN FOR FAN AND AT TIP FOR LPC,
                     ^HPC≠)
195.   004112B        IF(ICENT.EQ.3.AND.IICENT.EQ.3) WRITE(6,1607)
196.   004121B   1607 FORMAT(1H0,1X,≠NO CENTRIFUGAL ACTION≠)
197.   004121B        IF(ICENT.EQ.6.AND.IICENT.EQ.6) WRITE(6,1615)
198.   004130B   1615 FORMAT(1H0,1X,≠NO MASS TRANSFER≠)
199.   004130B        IF(ICENT.EQ.7.AND.IICENT.EQ.7) WRITE(6,1614)
200.   004137B   1614 FORMAT(1H0,1X,≠NO MASS TRANSFER AND NO CENTRIFUGAL ACTION≠)
201.   004137B        IF(ICENT.EQ.4.AND.IICENT.EQ.4) WRITE(6,1608)
202.   004146B   1608 FORMAT(1H0,1X,≠NO CENTRIFUGAL ACTION≠)
203.   004146B        IF(ICENT.EQ.5.AND.IICENT.EQ.5) WRITE(6,1609)
204.   004155B   1609 FORMAT(1H0,1X,≠NO HEAT AND MASS TRANCEFER;AND NO CENTRIFUGAL
                     $ ACTION≠)
205.   004155B        IF(JCENT.EQ.1) WRITE(6,1612)
206.   004162B   1612 FORMAT(1H0,1X,≠LARGE DROPLETS IN ROTOR FREE STREAM ARE CENTRIFUG
                     $ED≠)
207.   004162B        IF(JCENT.NE.1) WRITE(6,1611)
208.   004167B   1611 FORMAT(1H0,1X,≠LARGE DROPLETS IN ROTOR FREE STREAM ARE NOT CENTRIF
                     $UGED≠)
209.   004167B        WRITE(6,1620)
210.   004172B   1620 FORMAT(1H0,14X,≠1≠,5X,≠2≠,5X,≠3≠,5X,≠4≠,5X,≠5≠,5X,≠6≠,
                     $ 5X,≠7≠,5X,≠8≠,5X,≠9≠,5X,≠10≠,4X,≠11≠,4X,≠12≠,4X,≠13≠,
                     $ 4X,≠14≠,4X,≠15≠,4X,≠16≠)
```

```
004172B          WRITE(6,1630) (RRHUB(I),I=1,NS)
004202B    1630 FORMAT(1H ,1X,≠RRHUB(I)≠,3X,20(F5.3,1X))
004202B          WRITE(6,1640) (RC(I),I=1,NS)
004212B    1640 FORMAT(1H ,1X,≠RC(I)≠,6X,20(F5.3,1X))
004212B          WRITE(6,1650) (RBLADE(I),I=1,NS)
004222B    1650 FORMAT(1H ,1X,≠RBLADE(I)≠,2X,20(F5.2,1X))
004222B          WRITE(6,1660) (STAGER(I),I=1,NS)
004232B    1660 FORMAT(1H ,1X,≠STAGER(I)≠,2X,20(F5.2,1X))
004232B          WRITE(6,1661) (STAGES(I),I=1,NS)
004242B    1661 FORMAT(1H ,1X,≠STAGES(I)≠,2X,20(F5.2,1X))
004242B          WRITE(6,1670) (SRHUB(I),I=1,NS1)
004252B    1670 FORMAT(1H ,1X,≠SRHUB(I)≠,3X,20(F5.3,1X))
004252B          WRITE(6,1680) (SC(I),I=1,NS)
004262B    1680 FORMAT(1H ,1X,≠SC(I)≠,6X,20(F5.3,1X))
004262B          WRITE(6,1690) (SBLADE(I),I=1,NS)
004272B    1690 FORMAT(1H ,1X,≠SBLADE(I)≠,2X,20(F5.2,1X))
004272B          WRITE(6,1700) (SIGUMR(I),I=1,NS)
004302B    1700 FORMAT(1H ,1X,≠SIGUMR(I)≠,2X,20(F5.3,1X))
004302B          WRITE(6,1750) (SIGUMS(I),I=1,NS)
004312B    1750 FORMAT(1H ,1X,≠SIGUMS(I)≠,2X,20(F5.3,1X))
004312B          WRITE(6,1770) (BET2SS(I),I=1,NS1)
004322B    1770 FORMAT(1H ,1X,≠BET2SS(I)≠,2X,20(F5.2,1X))
004322B          WRITE(6,1795) (GAPR(I),I=1,NS)
004332B    1795 FORMAT(1H ,1X,≠GAPR(I)≠,4X,20(F5.3,1X))
004332B          WRITE(6,1796) (GAPS(I),I=1,NS)
004342B    1796 FORMAT(1H ,1X,≠GAPS(I)≠,4X,20(F5.3,1X))
004342B          WRITE(6,1798) (RRTIP(I),I=1,NS)
004352B    1798 FORMAT(1H ,1X,≠RRTIP(I)≠,3X,20(F5.2,1X))
004352B          WRITE(6,1799) (SRTIP(I),I=1,NS1)
004362B    1799 FORMAT(1H ,1X,≠SRTIP(I)≠,3X,20(F5.2,1X))
004362B          WRITE(6,1801) (RT(I),I=1,NS)
004372B    1801 FORMAT(1H ,1X,≠RT(I)≠,6X,20(F5.2,1X))
004372B          WRITE(6,1802) (RM(I),I=1,NS)
004402B    1802 FORMAT(1H ,1X,≠RM(I)≠,6X,20(F5.2,1X))
004402B          WRITE(6,1803) (RH(I),I=1,NS)
004412B    1803 FORMAT(1H ,1X,≠RH(I)≠,6X,20(F5.2,1X))
004412B          WRITE(6,1804) (ST(I),I=1,NS)
004422B    1804 FORMAT(1H ,1X,≠ST(I)≠,6X,20(F5.2,1X))
004422B          WRITE(6,1805) (SM(I),I=1,NS)
004432B    1805 FORMAT(1H ,1X,≠SM(I)≠,6X,20(F5.2,1X))
004432B          WRITE(6,1806) (SH(I),I=1,NS)
004442B    1806 FORMAT(1H ,1X,≠SH(I)≠,6X,20(F5.2,1X))
004442B          WRITE(6,1807) (BLOCK(I),I=1,NS)
004452B    1807 FORMAT(1H ,1X,≠BLOCK(I)≠,3X,20(F5.3,1X))
004452B          WRITE(6,1808) (BLOCKS(I),I=1,NS1)
004462B    1808 FORMAT(1H ,1X,≠BLOCKS(I)≠,2X,20(F5.3,1X))
004462B          WRITE(6,1811) (BET1MR(I),I=1,NS)
004472B    1811 FORMAT(1H ,1X,≠BET1MR(I)≠,2X,20(F5.2,1X))
004472B          WRITE(6,1812) (BET2MR(I),I=1,NS)
004502B    1812 FORMAT(1H ,1X,≠BET2MR(I)≠,2X,20(F5.2,1X))
004502B          WRITE(6,1813) (BET1MS(I),I=1,NS1)
004512B    1813 FORMAT(1H ,1X,≠BET1MS(I)≠,2X,20(F5.2,1X))
004512B          WRITE(6,1814) (BET2MS(I),I=1,NS1)
004522B    1814 FORMAT(1H ,1X,≠BET2MS(I)≠,2X,20(F5.2,1X))
004522B          WRITE(6,1815) (PR12D(I),I=1,NS)
004532B    1815 FORMAT(1H ,1X,≠PR12D(I)≠,3X,20(F5.3,1X))
004532B          WRITE(6,1816) (PR13D(I),I=1,NS)
004542B    1816 FORMAT(1H ,1X,≠PR13D(I)≠,3X,20(F5.3,1X))
004542B          WRITE(6,1817) (ETARD(I),I=1,NS)
004552B    1817 FORMAT(1H ,1X,≠ETARD(I)≠,3X,20(F5.3,1X))
```

```
271.   004552B        WRITE(6,1818)
272.   004555B   1818 FORMAT(1H1,5X,≠***************************** INPUT DATA **********
                     $********************≠)
273.   004555B        WRITE(6,1800) FNF
274.   004561B   1800 FORMAT(1H0,1X,≠FNF(FRACTION OF DESIGN CORRECTED SPEED)=≠,F5.3)
275.   004561B        WRITE(6,1810) XDIN,XDDIN,RHUMID,XCH4
276.   004570B   1810 FORMAT(1H0,1X,≠XDIN(INITIAL WATER CONTENT OF SMALL DROPLET)=≠,F5.3
                     $,/,2X,≠XDDIN(INITIAL WATER CONTENT OF LARGE DROPLET)=≠,F5.3,/,
                     $2X,≠RHUMID(INITIAL RELATIVE HUMIDITY)=≠,F6.2,1X,≠PER CENT≠,/,
                     $2X,≠XCH4(INITIAL METHANE CONTENT)=≠,F5.3)
277.   004570B        WRITE(6,1820) TOG,TOW,PO
278.   004576B   1820 FORMAT(1H0,1X,≠TOG(COMPRESSOR INLET TOTAL TEMPRATURE OF GAS)=≠,
                     $F7.2,/,2X,≠TOW(COMPRESSOR INLET TEMPERATURE OF DROPLRET)=≠,F7.2,/,
                     $2X,≠PO(COMPRESSOR INLET TOTAL PRESSURE)=≠,F7.2)
279.   004576B        WRITE(6,1830) DIN,DDIN
280.   004603B   1830 FORMAT(1H0,1X,≠DIN(INITIIL DROPLET DIAMETER OF SMALL DROPLET)=≠,
                     $F6.1,/,2X,≠DDIN(INITIAL DROPLET DIAMETER OF LARGE DROPLET)=≠,F6.1)
281.   004603B        WRITE(6,1850) FND
282.   004607B   1850 FORMAT(1H0,1X,≠FND(DESIGN ROTATIONAL SPEED)=≠,F7.1)
283.   004607B        WRITE(6,1851) DSMASS
284.   004613B   1851 FORMAT(1H0,1X,≠DSMASS(DESIGN MASS FLOW RATE)=≠,F10.4)
285.   004613B        WRITE(6,1852)BYPASS
286.   004617B   1852 FORMAT(1H0,1X,≠BYPASS RATIO = ≠,F10.4)
287.   004617B        WRITE(6,1860) TOG
288.   004623B   1860 FORMAT(1H0,1X,≠COMPRESSOR INLET TOTAL TEMPERATURE(GAS PHASE)≠ ,
                     $F7.2,1X,≠R≠)
289.   004623B        WRITE(6,1870) PO
290.   004627B   1870 FORMAT(1H0,1X,≠COMPRESSOR INLET TOTAL PRESSURE=≠,F7.2,1X,≠LB/FT**2
                     $≠)
291.   004627B        WRITE(6,1880) PREB
292.   004633B   1880 FORMAT(1H0,1X,≠PREB(PERCENT OF WATER THAT REBOUND AFTER IMPINGEMEN
                     $T)=≠,F5.1,1X,≠PERCENT≠)
293.   004633B        WRITE(6,1900) FN
294.   004637B   1900 FORMAT(1H0,1X,≠ROTOR SPEED=≠,F7.1,1X,≠RPM≠)
295.   004637B        WRITE(6,1910) CRPM,FNFN
296.   004644B   1910 FORMAT(1H0,1X,≠CORRECTED ROTOR SPEED= ≠,F7.1,1X,≠RPM≠,≠(≠,2X,F5.1,
                     $≠PER CENT OF DESIGN CORRECTED SPEED)≠)
297.   004644B        TG(1)=T01D
298.   004644B        P(1)=P01D
299.   004646B        CALL WICSPD(DSMASS,ISTAGE)
             C ++++++++++++++++++++++++++++++++++++++++++++++++++++++++++++++++++++
300.   004651B        DO 1533 I=1,NS
301.   004653B        IF (I.LE.NSF) FN=FNDFAN*FNF*SQRT(TOG/518.7)
302.   004665B        IF (I.GT.NSF.AND.I.LE.(NSF+NSLPC))
                     $   FN=FNDLPC*FNF*SQRT(TOG/518.7)
303.   004701B        IF(I.GT.(NSF+NSLPC)) FN=FNDHPC*FNF*SQRT(TOG/518.7)
304.   004713B        IF(I.LE.NSF) FND=FNDFAN
305.   004717B        IF(I.GT.NSF.AND.I.LE.(NSF+NSLPC)) FND=FNDLPC
306.   004725B        IF(I.GT.(NSF+NSLPC)) FND=FNDHPC
307.   004730B        UTIP(I)=RT(I)/12.0*2.0*PAI*FN/60.0
308.   004733B        UTIPG(I)=RRTIP(I)/12.0*2.0*PAI*FN/60.0
309.   004740B        UTIP2(I)=ST(I)/12.0*2.0*PAI*FN/60.0
310.   004745B        UTIPD(I)=RT(I)/12.0*2.0*PAI*FND/60.0
311.   004751B        UDU(I)=(UTIP(I)/UTIPD(I))**2
312.   004753B        UMEAN(I)=RM(I)/12.0*2.0*PAI*FN/60.0
313.   004757B        UMEAN2(I)=SM(I)/12.0*2.0*PAI*FN/60.0
314.   004764B        UHUB(I)=RH(I)/12.0*2.0*PAI*FN/60.0
315.   004771B        UHUB2(I)=SH(I)/12.0*2.0*PAI*FN/60.0
316.   004776B        IF(IRAD.EQ.1) U(I)=UTIP(I)
317.   005003B        IF(IRAD.EQ.2) U(I)=UMEAN(I)
```

```
318.   005007B          IF(IRAD.EQ.3) U(I)=UHUB(I)
319.   005013B          IF(IRAD.EQ.4.AND.I.LE.NSF) U(I)=UMEAN(I)
320.   005021B          IF(IRAD.EQ.4.AND.I.GT.NSF) U(I)=UTIP(I)
321.   005027B          IF(IRAD.EQ.1) UU2(I)=UTIP2(I)
322.   005033B          IF(IRAD.EQ.2) UU2(I)=UMEAN2(I)
323.   005037B          IF(IRAD.EQ.3) UU2(I)=UHUB2(I)
324.   005043B          IF(IRAD.EQ.4.AND.I.LE.NSF) UU2(I)=UMEAN2(I)
325.   005051B          IF(IRAD.EQ.4.AND.I.GT.NSF) UU2(I)=UTIP2(I)
326.   005060B          IF(IRAD.EQ.1) RADI1(I)=RT(I)
327.   005063B          IF(IRAD.EQ.1) RADI2(I)=ST(I)
328.   005066B          IF(IRAD.EQ.2) RADI1(I)=RM(I)
329.   005072B          IF(IRAD.EQ.2) RADI2(I)=SM(I)
330.   005076B          IF(IRAD.EQ.3) RADI1(I)=RH(I)
331.   005102B          IF(IRAD.EQ.3) RADI2(I)=SH(I)
332.   005106B          IF(IRAD.EQ.4.AND.I.LE.NSF) RADI1(I)=RM(I)
333.   005114B          IF(IRAD.EQ.4.AND.I.LE.NSF) RADI2(I)=SM(I)
334.   005123B          IF(IRAD.EQ.4.AND.I.GT.NSF) RADI1(I)=RT(I)
335.   005131B          IF(IRAD.EQ.4.AND.I.GT.NSF) RADI2(I)=ST(I)
336.   005140B     1533 CONTINUE
337.   005142B          UTIPG(NS+1)=UTIPG(NS)
                  C MASS FLOWRATE
338.   005143B          NNPHI = 1
339.   005144B      901 READ(5,200) FAI
340.   005151B      200 FORMAT(F7.5)
341.   005151B          ISTAGE=0
342.   005151B          N=1
343.   005152B          IF(FAI.GT.1.0) GO TO 998
344.   005155B          IF(IPRINT.EQ.2) WRITE(6,197) FAI
345.   005163B      197 FORMAT(1H1,2X,≠FAI=≠,F7.5)
346.   005163B          FAIO=FAI
347.   005163B          VZ=UTIPG(1)*FAI
348.   005165B          TG(1)=OT01G
349.   005166B          VZERO=0.0
350.   005167B          VVZERO=0.0
351.   005170B          VVZERO=0.0
352.   005171B          VRZERO=RRTIP(1)
353.   005172B          RZERO=RRHUB(1)
354.   005173B          RRZERO=RRHUB(1)
355.   005174B          ITIP=0
356.   005175B          IITIP=0
357.   005176B          DAVE(N)=0.0
358.   005177B          DDAVE(N)=0.0
359.   005200B          TW(1)=OT01D
360.   005201B          TWW(1)=OT01D
361.   005202B          IF(XDIN.GT.0.0) DAVE(N)=DIN
362.   005207B          IF(XDDIN.GT.0.0) DDAVE(N)=DDIN
363.   005213B          IF(XDIN.GT.0.0) TW(1)=OT01D
364.   005217B          IF(XDDIN.GT.0.0) TWW(1)=OT01D
365.   005223B          P(1)=OP01
366.   005223B          TB(1) = WICBPT(TG(1), P(1))
367.   005226B          WS(1) = WICSH(TG(1) , P(1) )*RHUMID/100.0
368.   005231B          PW=WS(1)*P(1)/(WS(1)+0.6219)
369.   005235B          TDEW(1)=WICBPT(TG(1),PW)
370.   005240B          XW(1)=XDIN
371.   005241B          XWW(1)=XDDIN
372.   005242B          XWT(1)=XW(1)+XWW(1)
373.   005244B          XWTO=XWT(1)
374.   005245B          XV(1)=WS(1)/(1.0+WS(1))*(1.0-XWT(1)-XCH4)
375.   005252B          XA=1.0-XWT(1)-XV(1)-XCH4
376.   005256B          XG=XA+XV(1)+XCH4
```

```
377.   005257B        XAIN=XA
378.   005260B        XCH4IN=XCH4
379.   005262B        ISTAGE=1
380.   005263B        CALL WICPRP(XA,XV(1),XCH4,TG(1),RMIX,CPMIX,GAMMA,G1,G2,G3)
381.   005266B        GAMMAI=GAMMA
382.   005266B        RHOG(1)=P(1)/RMIX/TG(1)
383.   005271B        RHOA(1)=P(1)/RA/TG(1)
384.   005273B        AMASSM=-1.0
                 C AAAIGV=STREAM TUBE AREA AT IGV OUTLET
385.   005274B        AAA2=AAAIGV
386.   005276B        AAA3=AAAIGV
387.   005277B        CALL WICMAC(ISTAGE,AMASSM,TG(1),P(1),M,VZ,C,XWT(1),BET2SS(NS1),
                     $RMIX,CPMIX,AAA3)
388.   005303B        RHOG(1)=(1.0+G2*M**2)**G3*RHOG(1)
389.   005311B        RHOM(1)=1.0/((1.0-XWT(1))/RHOG(1)+XWT(1)/RHOW)
390.   005316B        MMASS = RHOM(1)*FAI*UTIPG(1)*AAA3
391.   005321B        MMASSO=MMASS
392.   005322B        WMASSO=MMASSO*XDIN
393.   005323B        WWMASO=MMASSO*XDDIN
394.   005325B        IF(IPRINT.EQ.2) WRITE(6,5558) MMASSO,XDIN,WMASSO,MMASS
395.   005337B   5558 FORMAT(1H0,2X,4(F10.5,2X))
396.   005337B        DAMY=OT01G/518.7
397.   005340B        DAMY2=OP01/(14.7*144.0)
398.   005342B        CMASS=MMASS*SQRT(DAMY)/DAMY2
399.   005346B        AMASS = XA * MMASS
400.   005350B        WMASS(1)=XW(1)*MMASS
401.   005351B        WWMASS(1)=XWW(1)*MMASS
402.   005353B        WTMASS(1)=XWT(1)*MMASS
403.   005354B        VMASS(1)=XV(1)*MMASS
404.   005356B        CHMASS=XCH4*MMASS
405.   005357B        GMASS(1)=MMASS-WTMASS(1)
406.   005361B        CMASS2=GMASS(1)*SQRT(DAMY)/DAMY2
407.   005365B        AMO=AMASS
408.   005367B        VMO=VMASS(1)
409.   005370B        CMO=CHMASS
410.   005372B        GMO=GMASS(1)
411.   005373B        WMO=WMASS(1)
412.   005374B        WWMO=WWMASS(1)
413.   005375B        WTMO=WTMASS(1)
414.   005377B        TLMO=GMO+WTMO
415.   005401B        TWMAS=WMASSO*AAAR1T/AAAIGV
416.   005403B        TWWMAS=WWMASO*AAAR1T/AAAIGV
417.   005405B        WMASTL=TWMAS+TWWMAS
418.   005407B        VMASTL=VMO*AAAR1T/AAAIGV+WMASTL
419.   005411B        VMASTT=VMO*AAAR1T/AAAIGV
                 C INITIAL VALUES
420.   005413B        TG(3)=TG(1)
421.   005414B        TW(3)=TW(1)
422.   005415B        TWW(3)=TWW(1)
423.   005417B        P(3)=P(1)
424.   005420B        TB(3)=TB(1)
425.   005422B        WS(3)=WS(1)
426.   005423B        TDEW(3)=TDEW(1)
427.   005425B        XV(3)=XV(1)
428.   005426B        XG=XA+XV(3)+XCH4
429.   005431B        XW(3)=XW(1)
430.   005432B        XWW(3)=XWW(1)
431.   005434B        VMASS(3)=VMASS(1)
432.   005435B        WMASS(3)=WMASS(1)
433.   005436B        WWMASS(3)=WWMASS(1)
```

```
434.   005437B        WCENT=WMASSO
435.   005441B        WWCENT=WWMASO
436.   005442B        VCENT=0.0
437.   005443B        DMDTA1=0.0
438.   005444B        DMDTA2=0.0
               C ++++++++++++++++++++++++++++++++++++++++++++++++++++++++++++++++
               C IGV IMPINGEMENT
439.   005445B        CALL WICISS(7,RADI1(1), XW(1) , XG , RHOG(1),0.0,VZ,WW1,WW2,WW)
440.   005447B        AMIMPS=WW
441.   005447B        AMWAKS = AMIMPS * (1.0-PREB)
442.   005452B        AMREBS=AMIMPS*PREB
               C ++++++++++++++++++++++++++++++++++++++++++++++++++++++++++++++++
               C IGV WAKE
443.   005453B        N=2
444.   005454B        DAVE(2)=DAVE(1)
445.   005455B        DDAVE(2)=DDAVE(1)
446.   005457B        ALFA3=BET2SS(NS1)*(FAID/FAI)**(1.0/7.0)
447.   005465B        DWAKEM=0.0
448.   005466B        IF(XDIN.GT.0.0.OR.XDDIN.GT.0.0) GO TO 628
449.   005472B        GO TO 629
450.   005472B    628 CALL WICWAK(RHOG(1),VZ,DWAKE,DWAKEM)
451.   005475B    629 CONTINUE
               C ++++++++++++++++++++++++++++++++++++++++++++++++++++++++++++++
               C IGV OUTLET
452.   005475B        IF(IDESIN.EQ.2) GO TO 322
453.   005476B        WMASS(3) = WMASS(1)
454.   005477B        XW(3) = XW(1)
455.   005501B        PRATIO=1.0
456.   005502B        TRATIO=1.0
457.   005503B        EFF=1.0
458.   005504B        AMIMPR=0.0
459.   005504B        AMREBR=0.0
460.   005505B        AMWAKR=0.0
461.   005506B        DELTGW=0.0
462.   005506B        DELTDW=0.0
463.   005507B        DELTGH=0.0
464.   005507B        DELTDH=0.0
465.   005510B        DELT=0.0
466.   005510B        DELP=0.0
467.   005511B        DMDTAV=0.0
468.   005511B        XV(3)=XV(1)
469.   005512B        XW(3)=XW(1)
470.   005513B        XWW(3)=XWW(1)
471.   005515B        WMASS(3) = WMASS(1)
472.   005516B        WWMASS(3)=WWMASS(1)
473.   005520B        VMASS(3) = VMASS(1)
474.   005521B        WS(3) = WS(1)
475.   005523B        TDEW(3)=TDEW(1)
476.   005524B        RHOA(3) = RHOA(1)
477.   005526B        RHOM(3) = RHOM(1)
478.   005527B        RHOG(3) = RHOG(1)
479.   005531B        TG(3) = TG(1)
480.   005532B        TW(3) = TW(1)
481.   005534B        TWW(3)=TWW(1)
482.   005535B        P(3) = P(1)
483.   005537B        TB(3) = TB(1)
484.   005540B        XV(2)=0.0
485.   005541B        XW(2) = 0.0
486.   005542B        XWW(2)=0.0
487.   005543B        WMASS(2) = 0.0
```

```
488.   005543B        WWMASS(2)=0.0
489.   005544B        VMASS(2) = 0.0
490.   005544B        WS(2) = 0.0
491.   005545B        RHOA(2)=0.0
492.   005545B        RHOM(2) = 0.0
493.   005546B        RHOG(2)= 0.0
494.   005546B        TG(2)=0.0
495.   005547B        TW(2) =0.0
496.   005547B        TWW(2)=0.0
497.   005550B        P(2) = 0.0
498.   005550B        TB(2) = 0.0
499.   005551B        TDEW(2)=0.0
500.   005551B        GAMMAO=GAMMA
                C ++++++++++++++++++++++++++++++++++++++++++++++++++++++++++++++
                C IGV OUTLET
501.   005552B        IF(IPRINT.EQ.2) WRITE(6,300) ISTAGE
502.   005562B    300 FORMAT(1H0,5X,≠ISTAGE=≠,I1,2X,≠(IGV)≠)
503.   005562B        IF(IPRINT.EQ.2) WRITE(6,301) PRATIO,TRATIO,EFF
504.   005572B    301 FORMAT(1H0,5X,3(F12.5,5X))
505.   005572B        IF(IPRINT.EQ.2) WRITE(6,302) FAI, VZ, XA
506.   005602B    302 FORMAT(1H0,5X,3(F12.5,5X))
507.   005602B        IF(IPRINT.EQ.2) WRITE(6,303) MMASS, AMASS, AMIMPS, AMREBS, AMWAKS,
                     1AMIMPR, AMREBR, AMWAKR
508.   005617B    303 FORMAT(1H0,5X,8(F12.5,2X))
509.   005617B        IF(IPRINT.EQ.2) WRITE(6,304) DELTGW,DELTDW,DELTGH,DELTDH,DMDTAV,
                     $DELT,DELP
510.   005633B    304 FORMAT(1H0,5X,7(F12.5,2X))
511.   005633B        IF(IPRINT.EQ.2) WRITE(6,305) XV(1), XV(2), XV(3)
512.   005643B    305 FORMAT(1H0,5X,≠XV=≠,3(F20.10,5X))
513.   005643B        IF(IPRINT.EQ.2) WRITE(6,306) XW(1), XW(2) , XW(3)
514.   005653B    306 FORMAT(1H0,5X,≠XW=≠,3(F20.10,5X))
515.   005653B        IF(IPRINT.EQ.2) WRITE(6,307) WMASS(1), WMASS(2) , WMASS(3)
516.   005663B    307 FORMAT(1H0,5X,≠WMASS=≠,3(F20.10,5X))
517.   005663B        IF(IPRINT.EQ.2) WRITE(6,308) VMASS(1) , VMASS(2) , VMASS(3)
518.   005673B    308 FORMAT(1H0,5X,≠VMASS=≠,3(F20.10,5X))
519.   005673B        IF(IPRINT.EQ.2) WRITE(6,309) WS(1) , WS(2) , WS(3)
520.   005703B    309 FORMAT(1H0,5X,≠WS=≠,3(F20.10,5X))
521.   005703B        IF(IPRINT.EQ.2) WRITE(6,310) RHOA(1) , RHOA(2) , RHOA(3)
522.   005713B    310 FORMAT(1H0,5X,≠RHOA=≠,3(F20.10,5X))
523.   005713B        IF(IPRINT.EQ.2) WRITE(6,311) RHOM(1), RHOM(2),RHOM(3)
524.   005723B    311 FORMAT(1H0,5X,≠RHOM=≠,3(F20.10,5X))
525.   005723B        IF(IPRINT.EQ.2) WRITE(6,312) RHOG(1),RHOG(2),RHOG(3)
526.   005733B    312 FORMAT(1H0,5X,≠RHOG=≠,3(F20.10,5X))
527.   005733B        IF(IPRINT.EQ.2) WRITE(6,313) TG(1),TG(2),TG(3)
528.   005743B    313 FORMAT(1H0,5X,≠TG=≠,3(F20.10,5X))
529.   005743B        IF(IPRINT.EQ.2) WRITE(6,314) TW(1),TW(2),TW(3)
530.   005753B    314 FORMAT(1H0,5X,≠TW=≠,3(F20.10,5X))
531.   005753B        IF(IPRINT.EQ.2) WRITE(6,315) P(1),P(2),P(3)
532.   005763B    315 FORMAT(1H0,5X,≠P=≠,3(F20.10,5X))
533.   005763B        IF(IPRINT.EQ.2) WRITE(6,316) TB(1),TB(2),TB(3)
534.   005773B    316 FORMAT(1H0,5X,≠TB=≠,3(F20.10,5X))
535.   005773B        IF(IPRINT.EQ.2) WRITE(6,321) TDEW(1),TDEW(2),TDEW(3)
536.   006003B    321 FORMAT(1H0,5X,≠TDEW=≠,3(F20.10,5X))
537.   006003B    322 RHOG(2)=RHOG(1)
                C ++++++++++++++++++++++++++++++++++++++++++++++++++++++++++++++
                C ROTOR INLET
538.   006003B    900 ISTAGE=ISTAGE+1
539.   006006B        TG(1)=TG(3)
540.   006007B        TW(1)=TW(3)
541.   006010B        TWW(1)=TWW(3)
```

```
542.   006011B        P(1)=P(3)
543.   006013B        TB(1)=TB(3)
544.   006014B        RHOA(1)=P(1)/RA/TG(1)
545.   006017B        WS(1)=WS(3)
546.   006021B        TDEW(1)=TDEW(3)
547.   006022B        XV(1)=XV(3)
548.   006024B        XCH4=CHMASS/MMASS
549.   006026B        XA=AMASS/MMASS
550.   006027B        XG=XA+XV(1)+XCH4
551.   006032B        XAIR(1)=XA
552.   006033B        XMETAN(1)=XCH4
553.   006035B        XGAS(1)=XG
554.   006036B        XW(1)=XW(3)
555.   006040B        XWW(1)=XWW(3)
556.   006041B        XWT(1)=XW(1)+XWW(1)
557.   006043B        VMASS(1)=VMASS(3)
558.   006044B        WMASS(1)=WMASS(3)
559.   006046B        WWMASS(1)=WWMASS(3)
560.   006047B        NSF1=NSF+1
561.   006051B        IF(ISTAGE.EQ.NSF1) GO TO 948
562.   006053B        GO TO 949
563.   006054B    948 AMASS=AMASS/(1.0+BYPASS)
564.   006056B        CHMASS=CHMASS/(1.0+BYPASS)
565.   006057B        VMASS(1)=VMASS(1)/(1.0+BYPASS)
566.   006061B        WMASS(1)=WMASS(1)/(1.0+BYPASS)
567.   006063B        WWMASS(1)=WWMASS(1)/(1.0+BYPASS)
568.   006065B    949 CONTINUE
569.   006066B        WTMASS(1)=WMASS(1)+WWMASS(1)
570.   006067B        MMASS=AMASS+CHMASS+VMASS(1)+WTMASS(1)
571.   006073B        TMASS(1)=MMASS
572.   006073B        GMASS(1)=TMASS(1)-WTMASS(1)
573.   006075B        IF(ISTAGE.EQ.1)       AMFAN=GMASS(1)
574.   006101B        IF(ISTAGE.EQ.(NSF+1)) AMLPC=GMASS(1)
575.   006105B        IF(ISTAGE.EQ.(NSF+NSLPC+1)) AMHPC=GMASS(1)
576.   006112B        ALFA1=ALFA3
577.   006112B        CALL WICPRP(XA,XV(1),XCH4,TG(1),RMIX,CPMIX,GAMMA,G1,G2,G3)
578.   006115B        GAMMAS=GAMMA
579.   006115B        AAA1=AAA3
580.   006117B        IF(NSF.NE.0.AND.ISTAGE.EQ.(NSF+1)) AAA1=AREA(ISTAGE)
581.   006125B        IF(NSF.NE.0.AND.ISTAGE.EQ.(NSF+NSLPC+1)) AAA1=AREA(ISTAGE)
               C ++++++++++++++++++++++++++++++++++++++++++++++++++++++++++++++++++++
               C STAGE PERFORMANCE CALCULATION
582.   006133B        JPERFM=2
583.   006133B        DAMY=0.0
584.   006134B        IF(WTMASS(1).GT.1.0E-4)
                     $DAMY=WWMASS(1)/WTMASS(1)
585.   006140B        IF(DAMY.GT.0.20) JPERFM=3
586.   006143B        IF(JPERFM.EQ.2) GO TO 1301
587.   006144B        IF(JPERFM.EQ.3) GO TO 1302
588.   006146B   1301 CALL WICSPB(FAIO,ISTAGE,MMASS,ALFA1,WKDONE,DAVE(N),DELV,WMASS(1)
                     $,N,OMEGA1,
                     $OMRGA2,OMEGA3,OMEGA4,OMEGA5,OMEGA6,OMEGAT,BETA1,BETA2,VZ,ALFA2,
                     $ALFA3,DELTG,DELTW,W1,W2,V1,V2,V3,AK1,AK2,AK3)
589.   006152B        GO TO 1303
590.   006152B   1302 CALL WICSPC(FAIO,ISTAGE,MMASS,ALFA1,WKDONE,DDAVE(N),DELV,WMASS(
                     $1),WWMASS(1),N,OMEGA1
                     $,OMEGA2,OMEGA3,OMEGA4,OMEGA5,OMEGA6,OMEGAT,BETA1,BETA2,VZ,ALFA2,
                     $ALFA3,DELTG,DELTW,W1,W2,V1,V2,V3,REAVE,DELVV2,DELVL2,AK1,AK2,
                     $AK3)
591.   006156B   1303 CONTINUE
```

```
592.   006156B        DELTG1=DELTG
593.   006156B        DELTW1=DELTW
594.   006160B        IF(VZ.LT.0.0.OR.VZ.GT.1000.0) WRITE(6,1304) VZ
595.   006171B   1304 FORMAT(1H0,1X,≠AXIAL VELOCITY IS TOO HIGH OR TOO LOW≠,≠VZ=≠,
                     $F10.5)
596.   006171B        IF(VZ.LT.0.0.OR.VZ.GT.1000.0) GO TO 901
597.   006174B        AAA2=AREAS(ISTAGE)
598.   006175B        AAA3=AREA(ISTAGE+1)
599.   006177B        IF(ISTAGE.EQ.NS) AAA3=AAA2
                C ++++++++++++++++++++++++++++++++++++++++++++++++++++++++++++++++++++
                C ROTOR IMPINGEMENT(SMALL DROPLET)
600.   006203B        IF(IPRINT.EQ.2) WRITE(6,8010)
601.   006210B   8010 FORMAT(1H1,≠ ROTOR IMPINGEMENT(SMALL DROPLET)≠)
602.   006210B        CALL WICIRS(ISTAGE,RADI1(ISTAGE),XW(1),XG,RHOG(1),BETA1,W1,WW1,
                     $WW2,WW)
603.   006213B        AMIMPR=WW
604.   006213B        IF(AMIMPR.LT.0.0) AMIMPR=0.0
605.   006217B        IF(AMIMPR.GT.WMASS(1)) AMIMPR=WMASS(1)
606.   006222B        AMREBR=AMIMPR*PREB/100.0
607.   006223B        AMWAKR=AMIMPR*(1.0-PREB/100.0)
608.   006226B        AMNOIR=WMASS(1)-AMIMPR
609.   006230B        XWNOIR=AMNOIR/MMASS
610.   006231B        XWREBR=AMREBR/MMASS
611.   006232B        XWWAKR=AMWAKR/MMASS
612.   006234B        IF(IPRINT.EQ.2) WRITE(6,609) AMIMPR,AMREBR,AMWAKR,AMNOIR,
                     $XWNOIR,XWREBR,XWWAKR
613.   006251B    609 FORMAT(1H ,7(F12.5,1X))
                C ++++++++++++++++++++++++++++++++++++++++++++++++++++++++++++++++++++
                C ROTOR IMPINGEMENT(LARGE DROPLET)
614.   006251B        IF(IPRINT.EQ.2) WRITE(6,8020)
615.   006256B   8020 FORMAT(1H0,≠ ROTOR IMPINGEMENT(LARGE DROPLET)≠)
616.   006256B        CALL WICIRL(ISTAGE,RADI1(ISTAGE),XWW(1),XG,RHOG(1),BETA1,W1,WW1,WW
                     $2,WW)
617.   006261B        BMIMPR=WW
618.   006261B        IF(BMIMPR.LT.0.0) BMIMPR=0.0
619.   006265B        IF(BMIMPR.GT.WWMASS(1)) BMIMPR=WWMASS(1)
620.   006270B        BMREBR=BMIMPR*PREB/100.0
621.   006271B        BMWAKR=BMIMPR*(1.0-PREB/100.0)
622.   006274B        BMNOIR=WWMASS(1)-BMIMPR
623.   006276B        XWWB=0.0
624.   006276B        IF(WWMASS(1).GT.1.0E-6) XWWB=BMWAKR/WWMASS(1)
625.   006302B        XWWNOR=BMNOIR/MMASS
626.   006303B        XWWRER=BMREBR/MMASS
627.   006304B        XWWWAR=BMWAKR/MMASS
628.   006306B        IF(IPRINT.EQ.2) WRITE(6,6090) BMIMPR,BMREBR,BMWAKR,BMNOIR,XWWNOR,
                     $XWWRER,XWWWAR
629.   006323B   6090 FORMAT(1H ,7(F12.5,1X))
                C ++++++++++++++++++++++++++++++++++++++++++++++++++++++++++++++++++++
                C ROTOR WAKE
630.   006323B        IF(IPRINT.EQ.2) WRITE(6,8030)
631.   006330B   8030 FORMAT(1H0,≠ ROTOR WAKE≠)
632.   006330B        N=N+1
633.   006331B        ALFA=BETA2
634.   006332B        DWAKEM=0.0
635.   006332B        IF(AMWAKR.GT.0.0) GO TO 630
636.   006335B        GO TO 631
637.   006336B    630 CALL WICWAK(RHOG(1),W2,DWAKE,DWAKEM)
638.   006340B    631 D1=DWAKEM
639.   006340B        IF(D1.LT.0.0) D1=0.0
640.   006344B        IF(D1.GT.DIN) D1=DIN
```

```
641.   006347B        AMING1=AMWAKR
642.   006347B        ALFA=BETA2
643.   006351B        RDELV1=DELVU2
644.   006352B        DWAKEM=0.0
645.   006353B        IF(BMWAKR.GT.0.0) GO TO 6310
646.   006356B        GO TO 6311
647.   006357B   6310 CALL WICWAK(RHOG(1),RDELV1,DWAKE,DWAKEM)
648.   006361B   6311 D2=DWAKEM
649.   006361B        IF(D2.LT.0.0) D2=0.0
650.   006365B        IF(D2.GT.DDIN) D2=DDIN
651.   006370B        RUP2=(90.0-BETA2)/180.0
652.   006372B        AMING2=BMWAKR*RUP2
653.   006373B        RDELV2=DELVL2
654.   006375B        DWAKEM=0.0
655.   006376B        IF(BMWAKR.GT.0.0) GO TO 6312
656.   006400B        GO TO 6313
657.   006400B   6312 CALL WICWAK(RHOG(1),RDELV2,DWAKE,DWAKEM)
658.   006403B   6313 D3=DWAKEM
659.   006403B        IF(D3.LT.0.0) D3=0.0
660.   006407B        IF(D3.GT.DDIN) D3=DDIN
661.   006412B        RLOW2=(90.0+BETA2)/180.0
662.   006414B        AMING3=BMWAKR*RLOW2
663.   006415B        WMASSS=WMASS(1)-AMWAKR
664.   006420B        WMASSL=WWMASS(1)-BMWAKR
665.   006422B        CALL WICSIZ(WMASSL,WMASSS,AMING1,AMING2,AMING3,DDAVE(1
                     $),DAVE(1),D1,D2,D3,DLIMIT,AMSLL,AMLGE,DSLL,DLGE)
666.   006424B        WWMASS(2)=AMLGE
667.   006424B        WMASS(2)=AMSLL
668.   006426B        IF(WMASS(2).LT.0.0) WMASS(2)=0.0
669.   006431B        IF(WWMASS(2).LT.0.0) WWMASS(2)=0.0
670.   006433B        WTMASS(2)=WWMASS(2)+WMASS(2)
671.   006434B        VMASS(2)=VMASS(1)
672.   006435B        MMASS=AMASS+CHMASS+VMASS(2)+WTMASS(2)
673.   006441B        TMASS(2)=MMASS
674.   006442B        GMASS(2)=TMASS(2)-WTMASS(2)
675.   006443B        DAVE(N)=DSLL
676.   006444B        DDAVE(N)=DLGE
677.   006446B        XW(2)=WMASS(2)/MMASS
678.   006450B        XWW(2)=WWMASS(2)/MMASS
679.   006451B        XWT(2)=WTMASS(2)/MMASS
680.   006452B        XV(2)=XV(1)
681.   006453B        XCH4=CHMASS/MMASS
682.   006455B        XA=AMASS/MMASS
683.   006457B        XG=XA+XV(2)+XCH4
684.   006462B        XAIR(2)=XA
685.   006463B        XMETAN(2)=XCH4
686.   006464B        XGAS(2)=XG
687.   006465B        WS(2)=VMASS(2)/AMASS
688.   006467B        PW=WS(2)*P(2)/(WS(2)+0.6219)
689.   006473B        IF(PW.LT.1.0E-8) PW=1.0E-8
690.   006476B        TDEW(2)=WICBPT(TG(2),PW)
691.   006500B        RHOA(2)=P(2)/RA/TG(2)
692.   006502B        CALL WICPRP(XA,XV(2),XCH4,TG(2),RMIX,CPMIX,GAMMA,G1,G2,G3)
693.   006505B        RHOG(2)=P(2)/RMIX/TG(2)
694.   006507B        IF(JPERFM.NE.3) BMASS=MMASS
695.   006513B        IF(JPERFM.EQ.3) BMASS=GMASS(2)
696.   006516B        CALL WICMAC(ISTAGE,BMASS,TG(2),P(2),M,VZ,C,XWT(2),ALFA2,
                     $RMIX,CPMIX,AAA2)
697.   006520B        RHOG(2)=(1.0+G2*M**2)**G3*RHOG(2)
698.   006526B        RHOM(2)=1.0/((1.0-XWT(2))/RHOG(2)+XWT(2)/RHOW)
```

```
699.   006533B        RHOA(2)=(1.0+G2*M**2)**G3*RHOA(2)
700.   006542B        IF(IPRINT.EQ.2) WRITE(6,614) VZ,ALFA,D1,D2,D3,WWMASS(2),
                     $WMASS(2),VMASS(2),XW(2),XV(2)
701.   006562B    614 FORMAT(1H ,10(F12.5,1X))
702.   006562B        IF(IPRINT.EQ.2) WRITE(6,615)WS(2),DAVE(N),DDAVE(N),RHOM(2),RHOA
                     $(2),RHOM(2),RHOG(2)
703.   006600B    615 FORMAT(1H ,7(F12.5,1X))
704.   006600B        IF(VZ.LT.0.0.OR.VZ.GT.1500.0) WRITE(6,6150)
705.   006607B   6150 FORMAT(1H0,≠VZ IS TOO HIGH OR TOO LOW: VZ=≠,F10.4)
               C ++++++++++++++++++++++++++++++++++++++++++++++++++++++++++++
               C CENTRIFUGAL EFFECT IN (VAPOR)
706.   006607B        IF(IPRINT.EQ.2) WRITE(6,8041)
707.   006614B   8041 FORMAT(1H0,≠CENTRIFUGAL ACTION IN ROTOR (VAPOR)≠)
708.   006614B        DELMV=0.0
709.   006614B        DELMAS=0.0
710.   006614B        AMASV=VMASTT+DMDTA1+DMDTA2
711.   006620B        IF(ICENTV.NE.0) GO TO 8042
712.   006621B        DELZZ=RC(ISTAGE)/12.0
713.   006623B        ALFAAV=(BETA1+BETA2)/2.0
714.   006626B        IRS=3
715.   006627B        RHOGAS=RHOG(2)
716.   006630B        RHUB=RRHUB(ISTAGE)
717.   006632B        CALL WICCEN(VRZERO,VUZERO,10.0,VZ,DELZZ,ALFAAV,FN,IRS,RHOGAS,RHUB,
                     $R2,U2,ITIP,VZTIME,XG,XA,XV(2),XCH4,RRTIP(ISTAGE),IPRINT)
718.   006636B        IRADD=IRAD
719.   006636B        IF(IRAD.EQ.4.AND.ISTAGE.LE.NSF) IRAD=2
720.   006645B        IF(IRAD.EQ.4.AND.ISTAGE.GT.NSF) IRAD=1
721.   006652B        CALL WICDMV(IPRINT,IRAD,VMASS(1),VMASTL,VMASTL,VRZERO,R2,
                     $AAREA(ISTAGE),RADI1(ISTAGE),DELMAS)
722.   006656B        IRAD=IRADD
723.   006656B        VCENT=VCENT+ABS(DELMAS)
724.   006662B        VRZERO=R2
725.   006663B        VUZERO=0.0
726.   006663B   8042 DELMV=DELMAS
727.   006665B        VM=VMASS(2)
728.   006667B        VMASS(2)=VMASS(2)+DELMAS
729.   006670B        IF(VMASS(2).LT.1.0E-8) VMASS(2)=1.0E-8
730.   006673B        DELMAS=VMASS(2)-VM
731.   006674B        DELVUM=28.964/18.043*DELMAS
732.   006675B        AMASS=AMASS-DELVUM
733.   005677B        MMASS=MMASS-DELVUM+DELMAS
               C ++++++++++++++++++++++++++++++++++++++++++++++++++++++++++++++++++++
               C CENTRIFUGAL EFFECT IN ROTOR(SMALL DROPLET)
734.   006702B        IF(IPRINT.EQ.2) WRITE(6,8040)
735.   006710B   8040 FORMAT(1H0,≠CENTRIFUGAL ACTION IN ROTOR (SMALL DROPLET)≠)
736.   006710B        DELMW=0.0
737.   006710B        DELMAS=0.0
738.   006710B        RW=0.0
739.   006711B        RWW=0.0
740.   006712B        IF(WTMASS(1).GT.1.0E-6) RW=WMASS(1)/WTMASS(1)
741.   006716B        IF(WTMASS(1).GT.1.0E-6) RWW=WWMASS(1)/WTMASS(1)
742.   006721B        AMASW=(WMASTL-WCENT-WWCENT)*RW
743.   005724B        IF(JCENT.EQ.1) AMASW=(WMASTL-WCENT-WWCENT)*(RW+RWW*(1.0-XWWB))
744.   006736B        BMASW=(WMASTL-WCENT-WWCENT)*RWW*XWWB
745.   006741B        IF(ICENT.EQ.4.OR.ICENT.EQ.5) GO TO 996
746.   006745B        IF(ICENT.EQ.7)GO TO 996
747.   006747B        IF(DAVE(N-1).LT.1.0E-6) GO TO 996
748.   006752B        IF(WMASS(2).LT.1.0E-6) GO TO 996
749.   006754B        DD=DAVE(N-1)
750.   006755B        DELZZ=RC(ISTAGE)/12.0
```

```
751.   006760B        ALFAAV=(BETA1+BETA2)/2.0
752.   006763B        IRS=2
753.   006764B        RHOGAS=RHOG(2)
754.   006765B        RHUB=RRHUB(ISTAGE)
755.   006767B        CALL WICCEN(RZERO,UZERO,DD,VZ,DELZZ,ALFAAV ,FN,IRS,RHOGAS,
                     1RHUB,R2,U2,ITIP,VZTIME,XG,XA,XV(2),XCH4,RRTIP(ISTAGE),IPRINT)
756.   006773B        IRADD=IRAD
757.   006773B        IF(IRAD.EQ.4.AND.ISTAGE.LE.NSF) IRAD=2
758.   007002B        IF(IRAD.EQ.4.AND.ISTAGE.GT.NSF) IRAD=1
759.   007007B        CALL WICDMS(IPRINT,IRAD,WMASS(1),AMASW,AMASW,RZERO,R2,AAREA(ISTA
                     $GE),RADI1(ISTAGE),RRTIP(ISTAGE),DMIN,DMOUT,AMASW2,DELMAS)
760.   007014B        IRAD=IRADD
761.   007014B        WCENT=DELMAS
762.   007016B        RZERO=R2
763.   007017B        UZERO=U2
764.   007021B    996 DELMW=DELMAS
765.   007022B        RWRWW=RW+RWW*(1.0-XWWB)
766.   007027B        IF(JCENT.EQ.1) DELMW=0.0
767.   007033B        IF(JCENT.EQ.1.AND.RWRWW.GT.1.0E-6) DELMW=DELMAS*RW/RWRWW
768.   007040B        IF(JCENT.EQ.1) DELMWW=DELMAS-DELMW
                 C++++++++++++++++++++++++++++++++++++++++++++++++++++++++++++++++++++++
                 C CENTRIFUGAL EFFECT IN ROTOR(LARGE DROPLET)
769.   007044B        IF(IPRINT.EQ.2) WRITE(6,8050)
770.   007051B   8050 FORMAT(1H0,≠ CENTRIFUGAL ACTION IN ROTOR (LARGE DROPLET)≠)
771.   007051B        DELMAS=0.0
772.   007051B        DELMWW=0.0
773.   007051B        IF(IICENT.EQ.4.OR.IICENT.EQ.5) GO TO 9996
774.   007055B        IF(IICENT.EQ.7)GO TO 9996
775.   007057B        IF(DDAVE(N-1).LT.1.0E-6) GO TO 9996
776.   007062B        IF(WWMASS(2).LT.1.0E-6) GO TO 9996
777.   007064B        DD=DDAVE(N-1)
778.   007065B        DELZZ=RC(ISTAGE)/12.0
779.   007070B        ALFAAV=0.0
780.   007071B        IIRS=2
781.   007072B        RHOGAS=RHOG(2)
782.   007073B        RHUB=RRHUB(ISTAGE)
783.   007074B        CALL WICCEN(RRZERO,UUZERO,DD,VZ,DELZZ,ALFAAV ,FN,IIRS,RHOGAS,
                     1RHUB,R2,U2,IITIP,VZTIME,XG,XA,XV(2),XCH4,RRTIP(ISTAGE),IPRINT)
784.   007100B        IRADD=IRAD
785.   007100B        IF(IRAD.EQ.4.AND.ISTAGE.LE.NSF) IRAD=2
786.   007107B        IF(IRAD.EQ.4.AND.ISTAGE.GT.NSF) IRAD=1
787.   007114B        CALL WICDML(IPRINT,IRAD,WWMASS(1),BMASW,BMASW,RRZERO,R2,AAREA(IS
                     $TAGE),RADI1(ISTAGE),RRTIP(ISTAGE),DMIN,DMOUT,AMASW2,DELMAS)
788.   007121B        IRAD=IRADD
789.   007121B        RRZERO=R2
790.   007123B        UUZERO=U2
791.   007124B   9996 DELMWW=DELMAS
792.   007126B        IF(JCENT.EQ.1) DELMWW=DELMWW+DELMAS
793.   007133B        WM=WMASS(2)
794.   007133B        WWM=WWMASS(2)
795.   007135B        WMASS(2)=WMASS(2)+DELMW
796.   007137B        WWMASS(2)=WWMASS(2)+DELMWW
797.   007140B        WTMASS(2)=WMASS(2)+WWMASS(2)
798.   007141B        IF(WTMASS(2).GT.WMASTL) TT=WTMASS(2)/WMASTL
799.   007145B        IF(WTMASS(2).GT.WMASTL) WMASS(2)=WMASS(2)/TT
800.   007150B        IF(WTMASS(2).GT.WMASTL) WWMASS(2)=WWMASS(2)/TT
801.   007154B        DELMW=WMASS(2)-WM
802.   007155B        DELMWW=WWMASS(2)-WWM
803.   007157B        WTMASS(2)=WMASS(2)+WWMASS(2)
804.   007160B        DELMAS=WTMASS(2)-WTMASS(1)
```

```
805.   007162B        MMASS=MMASS+DELMAS
806.   007163B        XW(2)=WMASS(2)/MMASS
807.   007164B        XWW(2)=WWMASS(2)/MMASS
808.   007165B        XV(2)=VMASS(2)/MMASS
809.   007167B        XA=AMASS/MMASS
810.   007170B        XCH4=CHMASS/MMASS
811.   007172B        XG=XA+XV(2)+XCH4
812.   007174B        DELVUM=RHOG(2)/RHOW*DELMAS
813.   007177B        AMASS=AMASS-DELVUM*(AMASS/GMASS(2))
814.   007202B        VMASS(2)=VMASS(2)-DELVUM*(VMASS(2)/GMASS(2))
815.   007205B        CHMASS=CHMASS-DELVUM*(CHMASS/GMASS(2))
816.   007211B        MMASS=AMASS+VMASS(2)+CHMASS+WTMASS(2)
817.   007214B        WS(2)=VMASS(2)/MMASS
818.   007215B        WCENT=WCENT+DELMW
819.   007217B        WWCENT=WWCENT+DELMWW
820.   007221B        IF(WMASS(2).LT.1.0E-6) DAVE(N)=0.0
821.   007226B        IF(WWMASS(2).LT.1.0E-6) DDAVE(N)=0.0
                C ++++++++++++++++++++++++++++++++++++++++++++++++++++++++++++
                C STATOR IMPINGEMENT(SMALL DROPLET)
822.   007231B        IF(IPRINT.EQ.2) WRITE(6,8060)
823.   007236B   8060 FORMAT(1H0,≠ STATOR IMPINGEMENT (SMALL DROPLET)≠)
824.   007236B        CALL WICISS(ISTAGE,RADI2(ISTAGE),XW(2),XG,RHOG(2),ALFA2,V2,
                     $WW1,WW2,WW)
825.   007241B        AMIMPS=WW
826.   007241B        IF(AMIMPS.GT.WMASS(2)) AMIMPS=WMASS(2)
827.   007245B        IF(AMIMPS.LT.0.0) AMIMPS=0.0
828.   007250B        AMREBS=AMIMPS*PREB/100.0
829.   007251B        AMWAKS=AMIMPS*(1.0-PREB/100.0)
830.   007254B        IF(IPRINT.EQ.2) WRITE(6,617) XW(2),XG,RHOG(2),V2,WW,AMIMPS,AMRE
                     $BS,AMWAKS
831.   007272B    617 FORMAT(1H ,8(F12.5,1X))
                C++++++++++++++++++++++++++++++++++++++++++++++++++++++++++++++++++++
                C STATOR IMPINGEMENT(LARGE DROPLET)
832.   007272B        IF(IPRINT.EQ.2) WRITE(6,8070)
833.   007277B   8070 FORMAT(1H0,≠ STATOR IMPINGEMENT (LARGE DROPLET)≠)
834.   007277B        CALL WICISL(ISTAGE,RADI2(ISTAGE),XWW(2),XG,RHOG(2),ALFA2,V2,WW1
                     $,WW2,WW)
835.   007302B        BMIMPS=WW
836.   007302B        IF(BMIMPS.LT.0.0) BMIMPS=0.0
837.   007306B        IF(BMIMPS.GT.WWMASS(2)) BMIMPS=WWMASS(2)
838.   007311B        BMREBS=BMIMPS*PREB/100.0
839.   007312B        BMWAKS=BMIMPS*(1.0-PREB/100.0)
840.   007315B        IF(IPRINT.EQ.2) WRITE(6,6617) XWW(2),XA,RHOA(2),VZ,WW,BMIMPS,BM
                     $REBS,BMWAKS
841.   007334B   6617 FORMAT(1H ,8(F12.5,1X))
                C++++++++++++++++++++++++++++++++++++++++++++++++++++++++++++++++++++
                C STATOR WAKE
842.   007334B        IF(IPRINT.EQ.2) WRITE(6,8080)
843.   007341B   8080 FORMAT(1H0,≠ STATOR WAKE≠)
844.   007341B        N=N+1
845.   007342B        ALFA=ALFA3
846.   007343B        DWAKEM=0.0
847.   007343B        IF(AMWAKS.GT.0.0) GO TO 632
848.   007346B        GO TO 633
849.   007347B    632 CALL WICWAK(RHOG(2),V3,DWAKE,DWAKEM)
850.   007351B    633 D1=DWAKEM
851.   007351B        IF(D1.LT.0.0) D1=0.0
852.   007355B        IF(D1.GT.DIN) D1=DIN
853.   007360B        AMING1=AMWAKS
854.   007360B        ALFA=ALFA3
```

```
855.   007362B          SDELV1=DELVV2
856.   007363B          DWAKEM=0.0
857.   007364B          IF(BMWAKS.GT.0.0) GO TO 6330
858.   007367B          GO TO 6331
859.   007370B     6330 CALL WICWAK(RHOG(2),SDELV1,DWAKE,DWAKEM)
860.   007372B     6331 D2=DWAKEM
861.   007372B          IF(D2.LT.0.0) D2=0.0
862.   007376B          IF(D2.GT.DDIN) D2=DDIN
863.   007401B          SUP2=(90.0-ALFA3)/180.0
864.   007403B          AMING2=BMWAKS*SUP2
865.   007404B          SDELV2=DELVL2
866.   007406B          DWAKEM=0.0
867.   007407B          IF(BMWAKS.GT.0.0) GO TO 6332
868.   007411B          GO TO 6333
869.   007411B     6332 CALL WICWAK(RHOG(2),SDELV2,DWAKE,DWAKEM)
870.   007414B     6333 D3=DWAKEM
871.   007414B          IF(D3.LT.0.0) D3=0.0
872.   007420B          IF(D3.GT.DDIN) D3=DDIN
873.   007423B          SLOW2=(90.0+ALFA3)/180.0
874.   007425B          AMING3=BMWAKS*SLOW2
875.   007426B          WMASSS=WMASS(2)-AMWAKS
876.   007431B          WMASSL=WWMASS(2)-BMWAKS
877.   007433B          IF(WMASSS.LT.0.0) WMASSS=0.0
878.   007436B          IF(WMASSL.LT.0.0) WMASSL=0.0
879.   007440B          CALL WICSIZ(WMASSL,WMASSS,AMING1,AMING2,AMING3,DDAVE(2),DAVE(
                       $2),D1,D2,D3,DLIMIT,AMSLL,AMLGE,DSLL,DLGE)
880.   007442B          WWMASS(3)=AMLGE
881.   007442B          WMASS(3)=AMSLL
882.   007444B          IF(WMASS(3).LT.0.0) WMASS(3)=0.0
883.   007447B          IF(WWMASS(3).LT.0.0) WWMASS(3)=0.0
884.   007451B          WTMASS(3)=WWMASS(2)+WMASS(2)
885.   007452B          VMASS(3)=VMASS(2)
886.   007453B          MMASS=AMASS+CHMASS+VMASS(3)+WTMASS(3)
887.   007457B          TMASS(3)=MMASS
888.   007460B          GMASS(3)=TMASS(3)-WTMASS(3)
889.   007461B          DAVE(N)=DSLL
890.   007462B          DDAVE(N)=DLGE
891.   007464B          XW(3)=WMASS(3)/MMASS
892.   007466B          XWW(3)=WWMASS(3)/MMASS
893.   007467B          XWT(3)=WTMASS(3)/MMASS
894.   007470B          XV(3)=XV(2)
895.   007472B          XA=AMASS/MMASS
896.   007474B          XCH4=CHMASS/MMASS
897.   007475B          XG=XA+XV(3)+XCH4
898.   007500B          XAIR(3)=XA
899.   007500B          XMETAN(3)=XCH4
900.   007502B          XGAS(3)=XG
901.   007503B          IF(WMASSO.LT.1.0E-6) WMASSO=WMASS(3)
902.   007510B          IF(WWMASO.LT.1.0E-6) WWMASO=WWMASS(3)
903.   007513B          IF(WTMASS(3).GT.0.0) RW=WMASS(3)/WTMASS(3)
904.   007517B          IF(WTMASS(3).GT.0.0) RWW=WWMASS(3)/WTMASS(3)
905.   007522B          TG(3)=TG(2)
906.   007522B          TW(3)=TW(2)
907.   007524B          IF(IPRINT.EQ.2) WRITE(6,619) RHOA(2),VZ,ALFA,D1,D2,WWMASS(3)
                       $,WMASS(3),VMASS(3),XW(3),XV(3)
908.   007544B      619 FORMAT(1H ,10(F12.5,1X))
909.   007544B          IF(IPRINT.EQ.2) WRITE(6,620) DAVE(N),TG(3),TW(3)
910.   007555B      620 FORMAT(1H ,3(F12.5,1X))
911.   007555B          IF(WMASS(2).GT.0.0.AND.WWMASS(2).GT.0.0) GO TO 951
912.   007561B          IF(WMASS(2).GT.0.0) GO TO 951
```

```
913.   007563B        IF(WWMASS(2).GT.0.0) GO TO 951
914.   007565B        WS(3)=WS(2)
915.   007565B        TB(3)=TB(2)
916.   007567B        TDEW(3)=TDEW(2)
917.   007570B        DELTG2=0.0
918.   007571B        DELTG3=0.0
919.   007572B        DELTW2=0.0
920.   007573B        TRATIO=TG(3)/TG(1)
921.   007574B        DAVE(N)=0.0
922.   007575B        RHOA(3)=P(3)/RA/TG(3)
923.   007600B        CALL WICPRP(XA,XV(3),XCH4,TG(3),RMIX,CPMIX,GAMMA,G1,G2,G3)
924.   007603B        RHOG(3)=P(3)/RMIX/TG(3)
925.   007605B        IF(JPERFM.NE.3) BMASS=MMASS
926.   007611B        IF(JPERFM.EQ.3) BMASS=GMASS(3)
927.   007614B        CALL WICMAC(ISTAGE,BMASS,TG(3),P(3),M,VZ,C,XWT(3),ALFA3,
                     $RMIX,CPMIX,AAA3)
928.   007616B        RHOG(3)=(1.0+G2*M**2)**G3*RHOG(3)
929.   007624B        RHOM(3)=1.0/((1.0-XWT(3))/RHOG(3)+XWT(3)/RHOW)
930.   007631B        RHOA(3)=(1.0+G2*M**2)**G3*RHOA(3)
931.   007640B        GO TO 950
932.   007640B    951 CONTINUE
933.   007642B        WTMASS(3)=WMASS(3)+WWMASS(3)
                 C++++++++++++++++++++++++++++++++++++++++++++++++++++++++++++++++++++++
                 C HEAT-TRANSFER (SMALL DROPLET)
934.   007643B        IF(IPRINT.EQ.2) WRITE(6,8120)
935.   007651B   8120 FORMAT(1H0,≠ HEAT TRANSFER≠)
936.   007651B        DELTGH=0.0
937.   007651B        DELTWH=0.0
938.   007651B        IF(ICENT.EQ.3.OR.ICENT.EQ.5) GO TO 8122
939.   007655B        IF(DAVE(N-2).GT.0.0.AND.DAVE(N).GT.0.0) GO TO 8121
940.   007662B        GO TO 8122
941.   007662B   8121 RE=0.0
942.   007663B        XV1=(XV(1)+XV(3))/2.0
943.   007666B        XW1=(XW(1)+XW(3))/2.0
944.   007671B        WMASS1=(WMASS(1)+WMASS(3))/2.0
945.   007674B        VMASS1=(VMASS(1)+VMASS(3))/2.0
946.   007677B        CPG1=XA*WICCPA(TG(1))+XV(1)*WICCPH(TG(1))+XCH4*WICCPC(TG(1))
947.   007712B        CPG3=XA*WICCPA(TG(3))+XV(3)*WICCPH(TG(3))+XCH4*WICCPC(TG(3))
948.   007725B        CPG=(CPG1+CPG3)/2.0
949.   007730B        CALL WICHET(TG(1),TG(3),TW(1),TW(3),DAVE(N-2),DAVE(N)
                     $,DELZ(ISTAGE),VZ,WMASS1,VMASS1,AMASS,CHMASS,CPG,CPW,DELTGH
                     $,DELTWH,RE)
950.   007737B   8122 DELTG2=DELTGH
951.   007737B        DELTW2=DELTWH
                 C ++++++++++++++++++++++++++++++++++++++++++++++++++++++++++++++++++++
                 C HEAT TRANSFER(LARGE DROPLET)
952.   007741B        DELTGH=0.0
953.   007742B        DELTWH=0.0
954.   007742B        IF(IICENT.EQ.3.OR.IICENT.EQ.5) GO TO 8124
955.   007745B        IF(DDAVE(N-2).GT.0.0.AND.DAVE(N).GT.0.0) GO TO 8123
956.   007753B        GO TO 8124
957.   007753B   8123 RE=0.0
958.   007754B        IF(DDAVE(N-1).GT.0.0) RE=REAVE
959.   007761B        XV1=(XV(1)+XV(3))/2.0
960.   007763B        XW1=(XWW(1)+XWW(3))/2.0
961.   007766B        WMASS1=(WWMASS(1)+WWMASS(3))/2.0
962.   007771B        VMASS1=(VMASS(1)+VMASS(3))/2.0
963.   007774B        CPG1=XA*WICCPA(TG(1))+XV(1)*WICCPH(TG(1))+XCH4*WICCPC(TG(1))
964.   010007B        CPG3=XA*WICCPA(TG(1))+XV(3)*WICCPH(TG(3))+XCH4*WICCPC(TG(3))
965.   010022B        CPG=(CPG1+CPG3)/2.0
```

```
966.   010025B        CALL WICHET(TG(1),TG(3),TWW(1),TWW(3),DDAVE(N-2),DDAVE(N)
                    $,DELZ(ISTAGE),VZ,WMASS1,VMASS1,AMASS,CHMASS,CPG,CPW,DELTGH
                    $,DELTWH,RE)
967.   010034B   8124 DELTG3=DELTGH
968.   010034B        DELTW3=DELTWH
969.   010036B        TG(3)=TG(1)+DELTG1-DELTG2-DELTG3
970.   010042B        TW(3)=TW(1)+DELTW1+DELTW2
971.   010045B        TWW(3)=TWW(1)+DELTW3
972.   010047B        TRATIO=TG(3)/TG(1)
973.   010051B        IF(IPRINT.EQ.2) WRITE(6,627) DELTG2,DELTW2,DELTG3,DELTW3,TG(3),
                    $TW(3),TWW(3),TRATIO
974.   010067B    627 FORMAT(1H ,8(F15.6,1X))
                C ++++++++++++++++++++++++++++++++++++++++++++++++++++++++++++++++++++
                C MASS-TRANSFER
975.   010067B        IF(IPRINT.EQ.2) WRITE(6,8130)
976.   010074B   8130 FORMAT(1H0,≠ MASS TRANSFER≠)
977.   010074B        DAVEN2=DAVE(N-2)
978.   010075B        DAVEN=DAVE(N)
979.   010076B        DZ=DELZ(ISTAGE)
980.   010100B        RE=0.0
981.   010101B        DMDTAV=0.0
982.   010102B        IF(ICENT.EQ.3.OR.ICENT.EQ.5) GO TO 637
983.   010106B        IF(ICENT.EQ.6.OR.ICENT.EQ.7) GO TO 637
984.   010111B        IF(DAVE(N-2).GT.0.0.AND.DAVE(N).GT.0.0) GO TO 636
985.   010116B        GO TO 637
986.   010116B    636 CALL WICMAS(WS(1),TW(1),TW(3),P(1),P(3),TG(1),TG(3),DZ,PWB1,PWB2
                    $,PW1,PW2,VZ,DAVEN2,DAVEN,HW2,VMASS(1),VMASS2,WMASS(1),WMASS2,
                    $DMDTAV,AMASS,RE)
987.   010121B    637 DMDTA1=DMDTAV
988.   010121B        IF(DMDTA1.LT.0.0) DMDTA1=0.0
989.   010125B        DAVEN2=DDAVE(N-2)
990.   010126B        DAVEN=DDAVE(N)
991.   010127B        DZ=DELZ(ISTAGE)
992.   010131B        RE=0.0
993.   010132B        DMDTAV=0.0
994.   010133B        IF(IICENT.EQ.3.OR.IICENT.EQ.5) GO TO 6370
995.   010137B        IF(IICENT.EQ.6.OR.IICENT.EQ.7) GO TO 6370
996.   010142B        IF(DDAVE(N-1).GT.0.0.AND.DDAVE(N).GT.0.0) RE=REAVE
997.   010151B        IF(DDAVE(N-2).GT.0.0.AND.DDAVE(N).GT.0.0) GO TO 6360
998.   010154B        GO TO 6370
999.   010154B   6360 CALL WICMAS(WS(1),TWW(1),TWW(3),P(1),P(3),TG(1),TG(3),DZ,PWB1,PWB2
                    $,PW1,PW2,VZ,DAVEN2,DAVEN,HW2,VMASS(1),VMASS2,WWMASS(1),WMASS2,
                    $DMDTAV,AMASS,RE)
1000.  010157B   6370 DMDTA2=DMDTAV
1001.  010157B        IF(DMDTA2.LT.0.0) DMDTA2=0.0
1002.  010163B        WMASS(3)=WMASS(3)-DMDTA1
1003.  010164B        WWMASS(3)=WWMASS(3)-DMDTA2
1004.  010166B        WMASTL=WMASTL-(DMDTA1+DMDTA2)*AAREAS(ISTAGE)/AAA2
1005.  010172B        IF(WMASTL.LT.0.0) WMASTL=0.0
1006.  010175B        IF(WMASS(3).LT.0.0) WMASS(3)=0.0
1007.  010177B        IF(WWMASS(3).LT.0.0) WWMASS(3)=0.0
1008.  010201B        WTMASS(3)=WMASS(3)+WWMASS(3)
1009.  010202B        VMASS(3)=VMASS(3)+DMDTA1+DMDTA2
1010.  010205B        MMASS=AMASS+CHMASS+VMASS(3)+WTMASS(3)
1011.  010210B        TMASS(3)=MMASS
1012.  010211B        GMASS(3)=TMASS(3)-WTMASS(3)
1013.  010212B        XW(3)=WMASS(3)/MMASS
1014.  010213B        XWW(3)=WWMASS(3)/MMASS
1015.  010214B        XWT(3)=WTMASS(3)/MMASS
1016.  010216B        XV(3)=VMASS(3)/MMASS
```

```
1017.   010217B        XA=AMASS/MMASS
1018.   010221B        XCH4=CHMASS/MMASS
1019.   010222B        XG=XA+XV(3)+XCH4
1020.   010225B        XAIR(3)=XA
1021.   010225B        XMETAN(3)=XCH4
1022.   010227B        XGAS(3)=XG
1023.   010230B        WS(3)=VMASS(3)/AMASS
1024.   010232B        PW=WS(3)*P(3)/(WS(3)+0.6219)
1025.   010236B        IF(PW.LT.1.0E-8) PW=1.0E-8
1026.   010241B        TDEW(3)=WICBPT(TG(3),PW)
1027.   010243B        RHOA(3)=P(3)/RA/TG(3)
1028.   010245B        CALL WICPRP(XA,XV(3),XCH4,TG(3),RMIX,CPMIX,GAMMA,G1,G2,G3)
1029.   010250B        RHOG(3)=P(3)/RMIX/TG(3)
1030.   010252B        IF(JPERFM.NE.3) BMASS=MMASS
1031.   010256B        IF(JPERFM.EQ.3) BMASS=GMASS(3)
1032.   010261B        CALL WICMAC(ISTAGE,BMASS,TG(3),P(3),M,VZ,C,XWT(3),ALFA3,
                      $RMIX,CPMIX,AAA3)
1033.   010263B        RHOG(3)=(1.0+G2*M**2)**G3*RHOG(3)
1034.   010271B        RHOM(3)=1.0/((1.0-XWT(3))/RHOG(3)+XWT(3)/RHOW)
1035.   010276B        RHOA(3)=(1.0+G2*M**2)**G3*RHOG(3)
1036.   010305B        TB(3)=WICBPT(TG(3),P(3))
1037.   010310B        IF(IPRINT.EQ.2) WRITE(6,624) WWMASS(3),XWW(3),DDAVE(N),WMASS(3),
                      $VMASS(3),XW(3),XV(3),WS(3),DAVE(N)
1038.   010331B    624 FORMAT(1H ,9(F12.5,1X))
1039.   010331B        IF(IPRINT.EQ.2) WRITE(6,625) RHOA(3),RHOM(3),RHOG(3),DMDTA1,DMD
                      $TA2,PW2,TW(3),TG(3)
1040.   010346B    625 FORMAT(1H ,8(F12.5,1X))
1041.   010346B    950 DELTGW=DELTG1
1042.   010346B        DELTDW=DELTW1
1043.   010350B        DELTGH=-DELTG2-DELTG3
1044.   010353B        DELTDH=DELTW2
1045.   010354B        DELP=P(3)-P(1)
1046.   010356B        GAMMAO=GAMMA
1047.   010357B        TB(3)=WICBPT(TG(3),P(3))
                C++++++++++++++++++++++++++++++++++++++++++++++++++++++++++++++++++++++
                C OUTPUT(STAGE PERFORMANCE)
1048.   010362B        IF(IDESIN.EQ.2) GO TO 475
1049.   010364B        WRITE(6,400) FAIO,ISTAGE
1050.   010372B    400 FORMAT(1H1,1X,≠*******************  ≠,1X,
                      $≠INITIAL FLOW COEFFICIENT=≠,1X,F5.3,1X,≠(ISTAGE= ≠,I2,1X,
                      $≠)≠,2X,≠*********************≠)
1051.   010372B    475 CONTINUE
1052.   010372B        PRATIO=P(3)/P(1)
1053.   010373B        TRATIO=TG(3)/TG(1)
1054.   010375B        GAMMAV=(GAMMAS+GAMMAO)/2.0
1055.   010400B        G4=(GAMMAV-1.0)/GAMMAV
1056.   010402B        ETAA(ISTAGE)=(PRATIO**G4-1.0)/(TRATIO-1.0)
1057.   010410B        IF(IDESIN.EQ.2) GO TO 470
1058.   010413B        WRITE(6,402) JPERFM
1059.   010420B    402 FORMAT(1H0,5X,≠STAGE PERFORMANCE AFTER INTER-STAGE ADJUSTMENT≠,
                      $≠(JPERFM=≠,I1,≠)≠)
1060.   010420B        WRITE(6,401) PRATIO,TRATIO,ETAA(ISTAGE)
1061.   010427B    401 FORMAT(1H0,5X,≠STAGE TOTAL PRESSURE RATIO=≠,F12.5,/,
                      $6X,≠STAGE TOTAL TEMPERATURE RATIO=≠,F12.5,/,
                      $6X,≠STAGE ADIABATIC EFFICIENCY=≠,F12.5)
1062.   010427B        WRITE(6,4025)
1063.   010432B   4025 FORMAT(1H0,12X,≠**STAGE INLET**≠,4X,≠**STAGE OUTLET**≠,
                      $4X,≠**STAGE OUTLET**≠)
1064.   010432B        WRITE(6,4026)
1065.   010435B   4026 FORMAT(1H ,33X,≠(BEFORE INTER-≠,6X,≠(AFTER INTER-≠)
```

```
010435B          WRITE(6,4027)
010440B     4027 FORMAT(1H ,34X,≠STAGE ADJUST-≠,7X,≠STAGE ADJUST-≠)
010440B          WRITE(6,4028)
010443B     4028 FORMAT(1H ,34X,≠MENT)≠,15X,≠MENT)≠)
010443B          WRITE(6,405) XV(1), XV(1), XV(3)
010451B      405 FORMAT(1H ,5X,≠XV=≠,3(F15.5,5X))
010451B          WRITE(6,406) XW(1), XW(1) , XW(3)
010457B      406 FORMAT(1H ,5X,≠XW=≠,3(F15.5,5X))
010457B          WRITE(6,4060) XWW(1),XWW(1),XWW(3)
010465B     4060 FORMAT(1H ,5X,≠XWW=≠,3(F15.5,5X))
010465B          WRITE(6,4061) XWT(1),XWT(1),XWT(3)
010473B     4061 FORMAT(1H ,5X,≠XWT=≠,3(F15.5,5X))
010473B          WRITE(6,4062) XAIR(1),XAIR(1),XAIR(3)
010501B     4062 FORMAT(1H ,5X,≠XAIR=≠,3(F15.5,5X))
010501B          WRITE(6,4063) XMETAN(1),XMETAN(1),XMETAN(3)
010507B     4063 FORMAT(1H ,5X,≠XMETAN=≠,3(F15.5,5X))
010507B          WRITE(6,4064) XGAS(1),XGAS(1),XGAS(3)
010515B     4064 FORMAT(1H ,5X,≠XGAS=≠,3(F15.5,5X))
010515B          WRITE(6,407) WMASS(1), WMASS(1) , WMASS(3)
010523B      407 FORMAT(1H ,5X,≠WMASS=≠,3(F15.5,5X))
010523B          WRITE(6,4070) WWMASS(1),WWMASS(1),WWMASS(3)
010531B     4070 FORMAT(1H ,5X,≠WWMASS=≠,3(F15.5,5X))
010531B           WRITE(6,4071) WTMASS(1),WTMASS(1),WTMASS(3)
010537B     4071 FORMAT(1H ,5X,≠WTMASS=≠,3(F15.5,5X))
010537B           WRITE(6,4072) AMASS,AMASS,AMASS
010545B     4072 FORMAT(1H ,5X,≠AMASS=≠,3(F15.5,5X))
010545B          WRITE(6,4073) CHMASS,CHMASS,CHMASS
010553B     4073 FORMAT(1H ,5X,≠CHMASS=≠,3(F15.5,5X))
010553B          WRITE(6,408) VMASS(1) , VMASS(1) , VMASS(3)
010561B      408 FORMAT(1H ,5X,≠VMASS=≠,3(F15.5,5X))
010561B          WRITE(6,4080) GMASS(1),GMASS(1),GMASS(3)
010567B     4080 FORMAT(1H ,5X,≠GMASS=≠,3(F15.5,5X))
010567B          WRITE(6,4081) TMASS(1),TMASS(1),TMASS(3)
010575B     4081 FORMAT(1H ,5X,≠TMASS=≠,3(F15.5,5X))
010575B          WRITE(6,409) WS(1) , WS(1) , WS(3)
010603B      409 FORMAT(1H ,5X,≠WS=≠,3(F15.5,5X))
010603B          WRITE(6,410) RHOA(1) , RHOA(2) , RHOA(3)
010611B      410 FORMAT(1H ,5X,≠RHOA=≠,3(F15.5,5X))
010611B          WRITE(6,411) RHOM(1), RHOM(2),RHOM(3)
010617B      411 FORMAT(1H ,5X,≠RHOM=≠,3(F15.5,5X))
010617B          WRITE(6,412) RHOG(1),RHOG(2),RHOG(3)
010625B      412 FORMAT(1H ,5X,≠RHOG=≠,3(F15.5,5X))
010625B          WRITE(6,413) TG(1),TG(2),TG(3)
010633B      413 FORMAT(1H ,5X,≠TG=≠,3(F15.5,5X))
010633B          WRITE(6,414) TW(1),TW(2),TW(3)
010641B      414 FORMAT(1H ,5X,≠TW=≠,3(F15.5,5X))
010641B          WRITE(6,4140) TWW(1),TWW(2),TWW(3)
010647B     4140 FORMAT(1H ,5X,≠TWW=≠,3(F15.5,5X))
010647B          WRITE(6,415) P(1),P(2),P(3)
010655B      415 FORMAT(1H ,5X,≠P=≠,3(F15.5,5X))
010655B          WRITE(6,416) TB(1),TB(2),TB(3)
010663B      416 FORMAT(1H ,5X,≠TB=≠,3(F15.5,5X))
010663B          WRITE(6,422) TDEW(1),TDEW(2),TDEW(3)
010671B      422 FORMAT(1H ,5X,≠TDEW=≠,3(F15.5,5X))
010671B      470 CONTINUE
010671B          IF(IDESIN.EQ.2.AND.ISTAGE.EQ.1) WRITE(6,474)
010700B      474 FORMAT(1H1,≠ *************** STAGE PERFORMANCE **************≠)
010700B          IF(IDESIN.EQ.2.AND.ISTAGE.EQ.1) WRITE(6,471)
010707B      471 FORMAT(1H0,1X,≠FAIO≠,2X,≠STAGE≠,2X,≠PRATIO≠,1X,≠TRATIO≠,
                $3X,≠ETA≠,5X,≠XV≠,5X,≠XW≠,5X,≠XWW≠,4X,≠XWT≠,4X,≠TG≠,5X,≠TW≠)
```

```
1125.   010707B        IF(IDESIN.EQ.2) WRITE(6,472) FAIO,ISTAGE,PRATIO,TRATIO,
                     $ETAA(ISTAGE),XV(1),XW(1),XWW(1),XWT(1),TG(1),TW(1)
1126.   010730B    472  FORMAT(1H0,F6.3,2X,I2,3X,7F7.4,2X,F7.2,2X,F7.2)
                C++++++++++++++++++++++++++++++++++++++++++++++++++++++++++++++++++++++
                C REPEAT
1127.   010730B        IF(NSF.EQ.0) GO TO 457
1128.   010731B        IF(ISTAGE.EQ.NSF)  T02FAN=TG(3)
1129.   010735B        IF(ISTAGE.EQ.NSF)  P02FAN=P(3)
1130.   010740B        IF(ISTAGE.EQ.NSF) T01LPC=T02FAN
1131.   010743B        IF(ISTAGE.EQ.NSF) P01LPC=P02FAN
1132.   010746B        NSFLPC=NSF+NSLPC
1133.   010746B        IF(ISTAGE.EQ.NSFLPC) T02LPC=TG(3)
1134.   010752B        IF(ISTAGE.EQ.NSFLPC) P02LPC=P(3)
1135.   010755B        IF(ISTAGE.EQ.NSFLPC)  T01HPC=T02LPC
1136.   010760B        IF(ISTAGE.EQ.NSFLPC) P01HPC=P02LPC
1137.   010763B        IF(ISTAGE.EQ.NS) T02HPC=TG(3)
1138.   010767B        IF(ISTAGE.EQ.NS) P02HPC=P(3)
1139.   010772B    457 CONTINUE
1140.   010772B        IF(ISTAGE.EQ.NS) GO TO 902
1141.   010773B        GO TO 900
1142.   010774B    902 OVALPR=P(3)/OP01
1143.   010776B        OVALTR=TG(3)/OT01G
1144.   011000B        GAMMAV=(GAMMAI+GAMMAO)/2.0
1145.   011003B        G4=(GAMMAV-1.0)/GAMMAV
1146.   011005B        OVALEF=(OVALPR**G4-1.0)/(OVALTR-1.0)
1147.   011013B        ODELTG=TG(3)-OT01G
1148.   011016B        ODELTW=0.0
1149.   011016B        DELTWW=0.0
1150.   011017B        DELMT=0.0
1151.   011020B        DELMWT=0.0
1152.   011020B        DELMG=0.0
1153.   011021B        IF(XDIN.GT.0.0) ODELTW=TW(3)-OT01D
1154.   011026B        IF(XDDIN.GT.0.0) DELTWW=TWW(3)-OT01D
1155.   011032B        DELMT=(MMASS-TLMO)/TLMO
1156.   011033B        IF(WTMO.GT.0.0) DELMWT=(WTMASS(3)-WTMO)/WTMO
1157.   011041B        DELMG=(GMASS(3)-GMO)/GMO
1158.   011042B        IF(NSF.EQ.0) GO TO 458
1159.   011044B        PRFAN=P02FAN/P01FAN
1160.   011045B        TRFAN=T02FAN/T01FAN
1161.   011047B        PRLPC=P02LPC/P01LPC
1162.   011051B        TRLPC=T02LPC/T01LPC
1163.   011053B        PRHPC=P02HPC/P01HPC
1164.   011055B        TRHPC=T02HPC/T01HPC
1165.   011057B        PTREF=2116.80/SQRT(518.7)
1166.   011062B        CMFAN=AMFAN*SQRT(T01FAN)/P01FAN*PTREF
1167.   011067B        CMLPC=AMLPC*SQRT(T01LPC)/P01LPC*PTREF
1168.   011074B        CMHPC=AMHPC*SQRT(T01HPC)/P01HPC*PTREF
1169.   011101B        CMFANT=CMFAN*AAAR1T/AAAIGV
1170.   011104B        CMLPCT=CMLPC*AAAR1T/AAAIGV
1171.   011107B        CMHPCT=CMHPC*AAAR1T/AAAIGV
1172.   011110B        EFFAN=(PRFAN**G4-1.0)/(TRFAN-1.0)
1173.   011116B        EFLPC=(PRLPC**G4-1.0)/(TRLPC-1.0)
1174.   011124B        EFHPC=(PRHPC**G4-1.0)/(TRHPC-1.0)
1175.   011132B    458 CONTINUE
                C++++++++++++++++++++++++++++++++++++++++++++++++++++++++++++++++++++++
                C OUTPUT (OVERALL PERFORMANCE)
1176.   011134B        IF(IDESIN.NE.2) WRITE(6,421)
1177.   011141B    421 FORMAT(1H1,≠********** OVERALL PERFORMANCE **********≠)
1178.   011141B        IF(IDESIN.EQ.2) WRITE(6,473)
1179.   011146B    473 FORMAT(1H1,≠********** OVERALL PERFORMANCE *********≠)
```

```
1180.   011146B        WRITE(6,4220) FAIO
1181.   011152B   4220 FORMAT(1H0,1X,≠INITIAL FLOW COEFFICIENT=≠,F5.3)
1182.   011152B        WRITE(6,423) CRPM,FNF
1183.   011157B    423 FORMAT(1H0,1X,≠CORRECTED SPEED=≠,F7.1,5X,F5.3,1X,
                      $≠FRACTION OF DEIGN CORRECTED SPEED≠)
1184.   011157B        WRITE(6,424)XDIN,XDDIN,XWTO,RHUMID,XCH4IN
1185.   011167B    424 FORMAT(1H0,1X,≠INITIAL WATER CONTENT(SMALL DROPLET)=≠,F5.3,/,
                      $2X,≠INITIAL WATER CONTENT(LARGE DROPLET)=≠,F5.3,/,
                      $2X,≠INITIAL WATER CONTENT(TOTAL)=≠,F5.3,/,
                      $2X,≠INITIAL RELATIVE HUMIDITY=≠,F5.1,1X,≠PER CENT≠,/,
                      $2X,≠INITIAL METHANE CONTENT=≠,F5.3)
1186.   011167B        WRITE(6,425) TOG
1187.   011173B    425 FORMAT(1H0,1X,≠COMPRESSOR INLET TOTAL TEMPERATURE=≠,F8.2)
1188.   011173B        WRITE(6,426) PO
1189.   011177B    426 FORMAT(1H0,1X,≠COMPRESSOR INLET TOTAL PRESSURE=≠,F8.2)
1190.   011177B        CCMASS=CMASS*AAAR1T/AAAIGV
1191.   011201B        C2MASS=CMASS2*AAAR1T/AAAIGV
1192.   011202B        WRITE(6,427)  CCMASS
1193.   011207B    427 FORMAT(1H0,1X,≠CORRECTED MASS FLOW RATE OF MIXTURE=≠,F7.3)
1194.   011207B        WRITE(6,428)  C2MASS
1195.   011213B    428 FORMAT(1H0,1X,≠CORRECTED MASS FLOW RATE OF GAS PHASE ≠,F7.3)
1196.   011213B        WRITE(6,429) OVALPR
1197.   011217B    429 FORMAT(1H0,1X,≠OVERALL TOTAL PRESSURE RATIO=≠,F7.4)
1198.   011217B        WRITE(6,430) OVALTR
1199.   011223B    430 FORMAT(1H0,1X,≠OVERALL TOTAL TEMPERATURE RATIO=≠,F6.4)
1200.   011223B        WRITE(6,431) OVALEF
1201.   011227B    431 FORMAT(1H0,1X,≠OVERALL ADIABATIC EFFICIENCY=≠,F6.4)
1202.   011227B        IF(NSF.EQ.0)   GO TO 459
1203.   011230B        WRITE(6,445)
1204.   011233B    445 FORMAT(1H0,≠********** PERFORMANCE OF FAN,LPC,HPC **********≠)
1205.   011233B        WRITE(6,446)
1206.   011236B    446 FORMAT(1H0,7X,≠GAS PHASE  STAGNATION  STAGNATION   ADIABATIC≠)
1207.   011236B        WRITE(6,447)
1208.   011241B    447 FORMAT(1H0,7X,≠CORRECTED  PRESSURE    TEMPERATURE  EFFICIENCY≠)
1209.   011241B        WRITE(6,448)
1210.   011244B    448 FORMAT(1H0,7X,≠MASS FLOW    RATIO       RATIO≠)
1211.   011244B        WRITE(6,442)  CMFANT,PRFAN,TRFAN,EFFAN
1212.   011253B        WRITE(6,443)  CMLPCT,PRLPC,TRLPC,EFLPC
1213.   011262B        WRITE(6,444)  CMHPCT,PRHPC,TRHPC,EFHPC
1214.   011271B    442 FORMAT(1H0,1X,≠FAN≠,2X,4(F10.4,2X))
1215.   011271B    443 FORMAT(1H0,1X,≠LPC≠,2X,4(F10.4,2X))
1216.   011271B    444 FORMAT(1H0,1X,≠HPC≠,2X,4(F10.4,2X))
1217.   011271B    459 CONTINUE
1218.   011271B        GO TO 901
1219.   011271B    998 STOP
1220.   011273B        END
              C ++++++++++++++++++++++++++++++++++++++++++++++++++++++++++++++++++++++

   1.   000000B        SUBROUTINE WICSPB(FAIO,ISTAGE,MMASS,ALFA1,WKDONE,DAV,DELV,WMAS,N,
                      $OMEGA1,OMEGA2,OMEGA3,OMEGA4,OMEGA5,OMEGA6,OMEGAT,
                      $BETA1,BETA2,VZ,ALFA2,ALFA3,DELTG,DELTW,W1,W2,V1,V2,V3,AK1,AK2,
                      $AK3)
   2.   000000B        REAL M,MMASS
   3.   000000B        COMMON JPERFM,RHOG(3),RERUP,RERLOW,RESUP,RESLOW
                      ^,PREB,RRTIP(20),SRTIP(20),AAA1,AAA2,AAA3,SAREA(20),SAREAS(20)
                      ^,P(3),TG(3),XA,XV(3),XCH4,XW(3),XWW(3),XWT(3),TW(3),TWW(3)
                      ^,OMEGS(20),OMEGR(20),GAPR(20),GAPS(20)
                      ^,RRHUB(20) , RC(20) , RBLADE(20) , STAGER(20)
                      ^,SRHUB(20) , SC(20) , SBLADE(20),STAGES(20)
                      ^,SIGUMR(20) , BET1SR(20) , BET2SR(20) , AINCSR(20) , ADEVSR(20)
```

```
                  ^,SIGUMS(20) , BET1SS(20) , BET2SS(20) , AINCSS(20) , ADEVSS(20)
                  ^,UTIPG(20),UTIP(20),UTIPD(20),UOU(20),UMEAN(20),UHUB(20),U(20),FAI
                  ^,AREA(20),AREAS(20),UU2(20),UTIP2(20),UMEAN2(20),UHUB2(20),IPRINT
                  ^,ICENT,IICENT,FMR1(20),FMA2(20),IDESIN,FAID
                  ^,NS,NSF,NSLPC,BYPASS,NS1,RT(20),RM(20),RH(20),ST(20),SM(20),SH(20)
                  ^,DSMASS,AAREA(20),AAREAS(20),PR12D(20),PR13D(20),ETARD(20)
                  ^,DR(20),DS(20),DEQR(20),DEQS(20),BLOCK(20),BLOCKS(20)
                  ^,BET1MR(20),BET2MR(20),BET1MS(20),BET2MS(20),RADI1(20),RADI2(20)
                  ^,FAIRIN(20),FAIOUT(20),ETASG(20),PSID(20),TAUD(20),SITADR(20)
                  ^,SITADS(20),WWD(20),VVD(20)
 4.   000000B      DIMENSION RHOM(3),ETAA(20)
 5.   000000B      AJ=778.26
 6.   000030B      PAI=3.1415926
 7.   000032B      CPW=1.0
 8.   000033B      RHOW=62.3
 9.   000035B      GC=32.174
10.   000036B      CALL WICPRP(XA,XV(1),XCH4,TG(1),RMIX,CPMIX,GAMMA,G1,G2,G3)
11.   000041B      GAMMA1=GAMMA
12.   000041B      RHOG(1)=P(1)/RMIX/TG(1)
13.   000044B      BMASS=MMASS
14.   000046B      AAA2=AREAS(ISTAGE)
15.   000050B      AAA3=AREA(ISTAGE+1)
16.   000051B      IF(NSF.NE.0.AND.ISTAGE.EQ.NSF) AAA3=AAA2
17.   000056B      IF(NSF.NE.0.AND.ISTAGE.EQ.(NSF+NSLPC)) AAA3=AAA2
18.   000063B      IF(ISTAGE.EQ.NS) AAA3=AAA2
19.   000066B      CALL WICMAC(ISTAGE,BMASS,TG(1),P(1),M,VZ,C,XWT(1),ALFA1,
                  $RMIX,CPMIX,AAA1)
20.   000073B      ASPEED=C
21.   000073B      ASPED1=ASPEED
22.   000074B      RHOG(1)=(1.0+G2*M **2)**G3*RHOG(1)
23.   000103B      RHOM(1)=1.0/((1.0-XWT(1))/RHOG(1)+XWT(1)/RHOW)
24.   000110B      VZ1=VZ
25.   000111B      FAI1=VZ1/UTIPG(ISTAGE)
26.   000113B      ALFA1R = ALFA1 * PAI / 180.0
27.   000116B      V1 = VZ / COS ( ALFA1R )
28.   000121B      VS1 = VZ * TAN ( ALFA1R )
29.   000124B      WS1 = U(ISTAGE)- VS1
30.   000127B      T = WS1 / VZ
31.   000127B      BETA1R = ATAN ( T)
32.   000132B      BETA1 = BETA1R * 180.0 / PAI
33.   000134B      TT = VZ **2 + WS1 **2
34.   000136B      W1 = SQRT ( TT )
35.   000141B      AMACH1 = W1 / ASPEED
36.   000142B      AMAC1=V1/ASPEED
37.   000143B      TS1=TG(1)/(1.0+G2*AMAC1**2)
38.   000147B      PS1=(TG(1)/TS1)**(-G1)*P(1)
39.   000156B      PREL1=(1.0+G2*AMACH1**2)**G1*PS1
40.   000165B      TREL1=(1.0+G2*AMACH1**2)*TS1
41.   000171B      JJJ=1
42.   000173B 2000 VZ2AS=VZ
43.   000174B      CALL WICGSL(SIGUMR(ISTAGE),BET1SR(ISTAGE),BET2SR(IST
                  $AGE),AINCSR(ISTAGE),ADEVSR(ISTAGE),AMACH1,BETA1,
                  $DEQR(ISTAGE),DEQN,SITADR(ISTAGE),
                  $SITACN,BET2N,OMEGAN,FMR1(ISTAGE),AK1,AK2,AK3,VZ1,VZ2AS,
                  $U(ISTAGE),RADI1(ISTAGE),RADI2(ISTAGE))
44.   000217B      IF(IPRINT.EQ.2) WRITE(6,190) OMEGR(ISTAGE),SIGUMR(ISTAGE),
                  $BET1SR(ISTAGE),BET2SR(ISTAGE),AINCSR(ISTAGE),ADEVSR(ISTAGE),
                  $AMACH1,BETA1,DEQR(ISTAGE),DEQN,SITADR(ISTAGE),SITACN,BET2N,OMEGAN
45.   000252B  190 FORMAT(1H0,1X,14(F7.3,2X))
46.   000252B      DEQRR=DEQN
```

```
 47.   000252B        SITACR=SITACN
 48.   000254B        AINCIR=BETA1-BET1MR(ISTAGE)
 49.   000257B        ADEVIR=BET2N-BET2MR(ISTAGE)
 50.   000261B        IF(IPRINT.EQ.2) WRITE(6,191) AINCIR,AINCSR(ISTAGE),ADEVIR,
                     $ADEVSR(ISTAGE)
 51.   000275B    191 FORMAT(1H0,1X,4(F7.3,2X))
 52.   000275B        OMEGA1=OMEGAN
 53.   000275B        BETA2=BET2N
 54.   000277B        BETA2R=BETA2*PAI/180.0
 55.   000301B        W2=VZ/COS(BETA2R)
 56.   000304B        UG=(W1+W2)/2.0
 57.   000307B        OMEGAP=0.0
 58.   000310B        IF(XW(1).GT.0.0)
                     $CALL WICSDL(RC(ISTAGE),SIGUMR(ISTAGE),BETA1,BETA2,UG,RHOG(1),
                     $WMAS,AAA1,VZ,OMEGAP)
 59.   000323B        OMEGA2=OMEGAP
 60.   000323B        OMEGA3=0.0
 61.   000324B        DELP3=0.0
 62.   000325B        BETA2R = BETA2 * PAI / 180.0
 63.   000330B        JJ=1
 64.   000331B    200 VZAS=VZ
 65.   000332B        WS2 = VZ * TAN ( BETA2R )
 66.   000335B        VS2 = UU2(ISTAGE) - WS2
 67.   000340B        IF(VS2.LT.0.0) GO TO 999
 68.   000342B        TTT=VS2/VZ
 69.   000343B        ALFA2R = ATAN ( TTT )
 70.   000346B        ALFA2 = ALFA2R * 180.0 / PAI
 71.   000350B        TTTT = VZ ** 2 + WS2 ** 2
 72.   000352B        W2 = SQRT ( TTTT )
 73.   000355B        TTTTT = VZ ** 2 + VS2 ** 2
 74.   000357B        V2 = SQRT ( TTTTT )
 75.   000362B        DELH=WKDONE*(UU2(ISTAGE)*VS2-U(ISTAGE)*VS1)/GC/AJ
 76.   000370B        XG=1.0-XWT(1)
 77.   000372B        CALL WICIRS(ISTAGE,RRTIP(ISTAGE),XW(1),XG,RHOG(1),BETA1,W1,WW1,
                     $WW2,WW)
 78.   000401B        AMIMPR=WW
 79.   000401B        IF(AMIMPR.GT.WMAS) AMIMPR=WMAS
 80.   000405B        PREB=50.0
 81.   000405B        AMREBR=AMIMPR*PREB/100.0
 82.   000410B        AMWAKR=AMIMPR*(1.0-PREB/100.0)
 83.   000412B        AMNOIR=WMAS-AMIMPR
 84.   000413B        XWNOIR=AMNOIR/MMASS
 85.   000414B        XWREBR=AMREBR/MMASS
 86.   000416B        XWWAKR=AMWAKR/MMASS
 87.   000417B        XW1=0.0
 88.   000420B        XW2=0.0
 89.   000421B        XW3=0.0
 90.   000422B        IF(WMAS.GT.0.0) XW1=AMNOIR/WMAS
 91.   000426B        IF(WMAS.GT.0.0) XW2=AMWAKR/WMAS
 92.   000431B        IF(WMAS.GT.0.0) XW3=AMREBR/WMAS
 93.   000434B        DELTG=DELH/CPMIX
 94.   000435B        DELTW1=DELH/CPW
 95.   000436B        DELTW2=DELH/CPW
 96.   000437B        DELTW3=0.0
 97.   000440B        DELTW=XW1*DELTW1+XW2*DELTW2+XW3*DELTW3
 98.   000446B        TW(2)=TW(1)+DELTW
 99.   000450B        TG(2)=TG(1)+DELTG
100.   000452B        TS2=TG(2)-V2**2/(2.0*CPMIX*GC*AJ)
101.   000457B        AG2=(GAMMA*RMIX*TS2*GC)**0.5
102.   000465B        ASPEED=WICASD(XWT(1),RHOG(1),AG2)
```

```
103.   000467B          AMAC2=V2/ASPEED
104.   000470B          AMACH2=W2/ASPEED
105.   000471B          PP1=GAMMA*RMIX*TREL1*GC
106.   000475B          PP2=(UU2(ISTAGE)/U(ISTAGE))**2-1.0
107.   000501B          PP3=1.0+G2*U(ISTAGE)**2/PP1*PP2
108.   000505B          PP=PP3**G1
109.   000510B          PRREL=PP-(OMEGA1+OMEGA2+OMEGA3)*(1.0-PS1/PREL1)
110.   000517B          PR12=(TG(2)/TG(1))**G1*PRREL/PP
111.   000525B          P(2)=PR12*P(1)
112.   000527B          PS2=(1.0+G2*AMAC2**2)**(-G1)*P(2)
113.   000537B          RHOG2=PS2/RMIX/TS2
114.   000542B          RHOG(2)=RHOG2
115.   000542B          RHOM2=1.0/(XG/RHOG2+XWT(1)/RHOW)
116.   000547B          VZ=BMASS/RHOM2/AAA2
117.   000551B          VZ2=VZ
118.   000551B          EPS=1.0E-4
119.   000552B          IF(JJ.EQ.2) GO TO 201
120.   000555B          IF(JJ.GT.2) GO TO 202
121.   000557B          X1=VZAS
122.   000560B          Y1=VZ2
123.   000561B          VZ=VZ2
124.   000562B          JJ=JJ+1
125.   000564B          GO TO 200
126.   000565B      201 X2=VZAS
127.   000566B          Y2=VZ2
128.   000570B          VZ=WICNEW(X1,Y1,X2,Y2)
129.   000573B          IF(IPRINT.EQ.2) WRITE(6,203) JJ,VZ
130.   000603B      203 FORMAT(1H ,1X,I1,2X,≠VZ2=≠,F10.5)
131.   000603B          JJ=JJ+1
132.   000604B          IF(VZ.LT.0.0.OR.VZ.GT.ASPEED) GO TO 999
133.   000610B          GO TO 200
134.   000610B      202 IF(ABS((VZAS-VZ2)/VZAS).LT.EPS) GO TO 300
135.   000615B          X1=X2
136.   000615B          Y1=Y2
137.   000617B          X2=VZAS
138.   000620B          Y2=VZ2
139.   000622B          VZ=WICNEW(X1,Y1,X2,Y2)
140.   000624B          IF(IPRINT.EQ.2) WRITE(6,204) JJ,VZ
141.   000634B      204 FORMAT(1H0,1X,I1,2X,≠VZ2=≠,F10.5)
142.   000634B          JJ=JJ+1
143.   000635B          IF(VZ.LT.0.0.OR.VZ.GT.ASPEED) GO TO 999
144.   000641B          IF(JJ.EQ.20) GO TO 300
145.   000642B          GO TO 200
146.   000643B      300 VZ2CL=VZ
147.   000644B          IF(JJJ.EQ.2) GO TO 2010
148.   000647B          IF(JJJ.GT.2) GO TO 2020
149.   000651B          XX1=VZ2AS
150.   000652B          YY1=VZ2CL
151.   000653B          JJJ=JJJ+1
152.   000655B          GO TO 2000
153.   000656B     2010 XX2=VZ2AS
154.   000657B          YY2=VZ2CL
155.   000661B          VZ=WICNEW(XX1,YY1,XX2,YY2)
156.   000664B          IF(IPRINT.EQ.2) WRITE(6,2030) JJJ,VZ
157.   000674B     2030 FORMAT(1H ,1X,I2,≠VZ22=≠,F10.5)
158.   000674B          JJJ=JJJ+1
159.   000675B          GO TO 2000
160.   000675B     2020 IF(ABS((VZ2AS-VZ2CL)/VZ2AS).LT.EPS) GO TO 3000
161.   000702B          XX1=XX2
162.   000702B          YY1=YY2
```

```
163.   000704B          XX2=VZ2AS
164.   000705B          YY2=VZ2CL
165.   000707B          VZ=WICNEW(XX1,YY1,XX2,YY2)
166.   000711B          IF(IPRINT.EQ.2) WRITE(6,2040) JJJ,VZ
167.   000721B     2040 FORMAT(1H ,1X,I2,≠VZ22=≠,F10.5)
168.   000721B          JJJ=JJJ+1
169.   000722B          IF(JJJ.EQ.20) GO TO 3000
170.   000723B          GO TO 2000
171.   000724B     3000 VZ2=VZ2CL
172.   000724B          FAI2=VZ2/UTIPG(ISTAGE)
173.   000726B          P(2)=(1.0+G2*AMAC2**2)**G1*PS2
174.   000735B          JJJJ=1
175.   000737B     3001 VZ3AS=VZ
176.   000740B          IF(ISTAGE.EQ.NS) RADI1(ISTAGE+1)=RADI2(ISTAGE)
177.   000745B          CALL WICGSL(SIGUMS(ISTAGE),BET1SS(ISTAGE),
                       $BET2SS(ISTAGE),AINCSS(ISTAGE),ADEVSS(ISTAGE),AMAC2,ALFA2,
                       $DEQS(ISTAGE),DEQN,SITADS(ISTAGE),
                       $SITACN,BET2N,OMEGAN,FMA2(ISTAGE),AK1,AK2,AK3,
                       $VZ2,VZ3AS,0.0,RADI2(ISTAGE),RADI1(ISTAGE+1))
178.   000765B          ASPED2=ASPEED
179.   000765B          DEQSS=DEQN
180.   000767B          SITACS=SITACN
181.   000770B          DEQT=DEQRR+DEQSS
182.   000772B          SITACT=SITACR+SITACS
183.   000774B          AINCIS=ALFA2-BET1MS(ISTAGE)
184.   000777B          ADEVIS=BET2N-BET2MS(ISTAGE)
185.   001001B          IF(IPRINT.EQ.2) WRITE(6,302) AINCIS,AINCSS(ISTAGE),ADEVIS,
                       $ADEVSS(ISTAGE)
186.   001015B      302 FORMAT(1H0,1X,4(F7.3,2X))
187.   001015B          OMEGA4=OMEGAN
188.   001015B          ALFA3=BET2N
189.   001017B          ALFA3R=ALFA3*PAI/180.0
190.   001021B          V3=VZ/COS(ALFA3R)
191.   001024B          UG=(V2+V3)/2.0
192.   001027B          OMEGAP=0.0
193.   001030B          IF(XW(1).GT.0.0)
                       $CALL WICSDL(SC(ISTAGE),SIGUMS(ISTAGE),ALFA2,ALFA3,UG,RHOG(2)
                       $,WMAS,AAA2,VZ,OMEGAP)
194.   001043B          OMEGA5=OMEGAP
195.   001043B          OMEGA6=0.0
196.   001044B          PR23=1.0-(OMEGA4+OMEGA5+OMEGA6)*(1.0-PS2/P(2))
197.   001054B          PR13=(TG(2)/TG(1))**G1*PRREL*PR23/PP
198.   001063B          P(3)=PR13*P(1)
199.   001065B          TG(3)=TG(2)
200.   001066B          TS3=TG(3)-V3**2/(2.0*CPMIX*GC*AJ)
201.   001074B          AG3=(GAMMA*RMIX*TS3*GC)**0.5
202.   001102B          ASPEED=WICASD(XWT(1),RHOG(2),AG3)
203.   001104B          ASPED3=ASPEED
204.   001104B          AMAC3=V3/ASPEED
205.   001106B          PS3=(1.0+G2*AMAC3**2)**(-G1)*P(3)
206.   001116B          RHOG3=PS3/RMIX/TS3
207.   001121B          RHOG(3)=RHOG3
208.   001121B          RHOM3=1.0/(XG/RHOG3+XWT(1)/RHOW)
209.   001126B          VZ=BMASS/RHOM3/AAA3
210.   001130B          VZ3CL=VZ
211.   001130B          IF(JJJJ.EQ.2) GO TO 3010
212.   001132B          IF(JJJJ.GT.2) GO TO 3020
213.   001134B          XXX1=VZ3AS
214.   001135B          YYY1=VZ3CL
215.   001137B          JJJJ=JJJJ+1
```

```
001140B          GO TO 3001
001141B     3010 XXX2=VZ3AS
001142B          YYY2=VZ3CL
001144B          VZ=WICNEW(XXX1,YYY1,XXX2,YYY2)
001147B          IF(IPRINT.EQ.2) WRITE(6,3030) JJJJ,VZ
001157B     3030 FORMAT(1H ,1X,I2,2X,≠VZ33=≠,F10.5)
001157B          JJJJ=JJJJ+1
001160B          GO TO 3001
001160B     3020 IF(ABS((VZ3AS-VZ3CL)/VZ3AS).LT.EPS) GO TO 4000
001165B          XXX1=XXX2
001165B          YYY1=YYY2
001167B          XXX2=VZ3AS
001170B          YYY2=VZ3CL
001172B          VZ=WICNEW(XXX1,YYY1,XXX2,YYY2)
001174B          IF(IPRINT.EQ.2) WRITE(6,3040) JJJJ,VZ
001204B     3040 FORMAT(1H ,1X,I2,≠VZ33=≠,F10.5)
001204B          JJJJ=JJJJ+1
001205B          IF(JJJJ.EQ.20) GO TO 999
001206B          GO TO 3001
001207B     4000 VZ3=VZ3CL
001207B          FAI3=VZ3/UTIPG(ISTAGE+1)
001211B          TW(3)=TW(2)
001213B          OMEGTR=OMEGA1+OMEGA2+OMEGA3
001216B          OMEGTS=OMEGA4+OMEGA5+OMEGA6
001221B          PRATIO=P(3)/P(1)
001223B          TRATIO=TG(3)/TG(1)
001225B          CALL WICPRP(XA,XV(3),XCH4,TG(3),RMIX,CPMIX,GAMMA,G1,G2,G3)
001230B          GAMMA2=GAMMA
001230B          GAMMAV=(GAMMA1+GAMMA2)/2.0
001233B          G4=(GAMMAV-1.0)/GAMMAV
001235B          ETAA(ISTAGE)=(PRATIO**G4-1.0)/(TRATIO-1.0)
001243B          PSI=GC*AJ*CPMIX*ETAA(ISTAGE)*(TG(2)-TG(1))/(UTIPG(ISTAGE)**2)
001254B          IF(IDESIN.EQ.2) GO TO 999
001257B          WRITE(6,404) FAIO,ISTAGE
001265B      404 FORMAT(1H1,1X,≠********************  ≠,1X,
                $≠INITIAL FLOW COEFFICIENT=≠,1X,F5.3,1X,≠(STAGE=≠,I2,1X,
                $≠)≠,2X,≠********************≠)
001265B          WRITE(6,401) PRATIO,TRATIO,ETAA(ISTAGE)
001274B      401 FORMAT(1H0,5X,≠STAGE TOTAL PRESSURE RATIO=≠,F12.5,/,
                $6X,≠STAGE TOTAL TEMPERATURE RATIO=≠,F12.5,/,
                $6X,≠STAGE ADIABATIC EFFICIENCY=≠,F12.5)
001274B          WRITE(6,402) FAI1,VZ1,UTIPG(ISTAGE)
001303B      402 FORMAT(1H0,5X,≠STAGE FLOW COEFFICIENT=≠,F5.3,/,
                $6X,≠AXIAL VELOCITY=≠,F7.2,/,
                $6X,≠ROTOR SPEED=≠,F7.2,/)
001303B          WRITE(6,405)
001306B      405 FORMAT(1H0,24X,≠*ROTOR INLET* *ROTOR OUTLET* *STATOR OUTLET*≠)
001306B          WRITE(6,406) P(1),P(2),P(3)
001314B      406 FORMAT(1H ,1X,≠TOTAL PRESSURE≠,10X,3(F10.4,5X))
001314B          WRITE(6,407) PS1,PS2,PS3
001322B      407 FORMAT(1H ,1X,≠STATIC PRESSURE≠,9X,3(F10.4,5X))
001322B          WRITE(6,408) TG(1),TG(2),TG(3)
001330B      408 FORMAT(1H ,1X,≠TOTAL TEMPERATURE(GAS)≠,3X,3(F10.4,5X))
001330B          WRITE(6,409) TS1,TS2,TS3
001336B      409 FORMAT(1H ,1X,≠STATIC TEMPERATURE(GAS)≠,1X,3(F10.4,5X))
001336B          WRITE(6,410) RHOG(1),RHOG2,RHOG3
001344B      410 FORMAT(1H ,1X,≠STATIC DENSITY(GAS)≠,5X,3(F10.4,5X))
001344B          WRITE(6,411) RHOM(1),RHOM2,RHOM3
001352B      411 FORMAT(1H ,1X,≠STATIC DENSITY(MIXTURE)≠,1X,3(F10.4,5X))
001352B          WRITE(6,412) VZ1,VZ2,VZ3
```

```
270.   001360B    412 FORMAT(1H0,1X,≠AXIAL VELOCITY≠,10X,3(F10.4,5X))
271.   001360B        WRITE(6,413) V1,V2,V3
272.   001366B    413 FORMAT(1H ,1X,≠ABSOLUTE VELOCITY≠,7X,3(F10.4,5X))
273.   001366B        WRITE(6,414) W1,W2
274.   001373B    414 FORMAT(1H ,1X,≠RELATIVE VELOCITY≠,7X,2(F10.4,5X))
275.   001373B        WRITE(6,415) U(ISTAGE),UU2(ISTAGE),U(ISTAGE+1)
276.   001404B    415 FORMAT(1H ,1X,≠BLADE SPEED≠,13X,3(F10.4,5X))
277.   001404B        WRITE(6,416) VS1,VS2
278.   001411B    416 FORMAT(1H ,1X,≠TANG. COMP. OF ABS. VEL.≠,2(F10.4,5X))
279.   001411B        WRITE(6,417) WS1,WS2
280.   001416B    417 FORMAT(1H ,1X,≠TANG. COMP. OF REL. VEL.≠,2(F10.4,5X))
281.   001416B        WRITE(6,418) ASPED1,ASPED2,ASPED3
282.   001424B    418 FORMAT(1H ,1X,≠ACOUSTIC SPEED≠,10X,3(F10.4,5X))
283.   001424B        WRITE(6,419) AMAC1,AMAC2,AMAC3
284.   001432B    419 FORMAT(1H ,1X,≠ABSOLUTE MACH NUMBER≠,4X,3(F10.4,5X))
285.   001432B        WRITE(6,420) AMACH1,AMACH2
286.   001437B    420 FORMAT(1H ,1X,≠RELATIVE MACH NUMBER≠,4X,2(F10.4,5X))
287.   001437B        WRITE(6,421) FAI1,FAI2,FAI3
288.   001445B    421 FORMAT(1H0,1X,≠FLOW COEFFICIENT≠,8X,3(F10.4,5X))
289.   001445B        WRITE(6,422) AAA1,AAA2,AAA3
290.   001453B    422 FORMAT(1H ,1X,≠FLOW AREA≠,15X,3(F10.4,5X))
291.   001453B        WRITE(6,423) ALFA1,ALFA2,ALFA3
292.   001461B    423 FORMAT(1H0,1X,≠ABSOLUTE FLOW ANGLE≠,5X,3(F10.4,5X))
293.   001461B        WRITE(6,424) BETA1,BETA2
294.   001466B    424 FORMAT(1H ,1X,≠RELATIVE FLOW ANGLE≠,5X,3(F10.4,5X))
295.   001466B        WRITE(6,425) AINCIR,AINCIS
296.   001473B    425 FORMAT(1H ,1X,≠INCIDENCE≠,16X,2(F10.4,5X))
297.   001473B        WRITE(6,426) ADEVIR,ADEVIS
298.   001500B    426 FORMAT(1H ,1X,≠DEVIATION≠,31X,2(F10.4,5X))
299.   001500B        WRITE(6,430) DEQRR,DEQSS
300.   001505B    430 FORMAT(1H ,1X,≠DIFFUSION RATIO≠,25X,2(F10.4,5X))
301.   001505B        WRITE(6,427) SITACR,SITACS
302.   001512B    427 FORMAT(1H ,1X,≠MOMENTUM THICKNESS≠,21X,2(F10.4,5X))
303.   001512B        WRITE(6,428) OMEGA1,OMEGA4
304.   001517B    428 FORMAT(1H ,1X,≠OMEGA (GAS)≠,31X,2(F10.5,5X))
305.   001517B        WRITE(6,429) OMEGTR,OMEGTS
306.   001524B    429 FORMAT(1H ,1X,≠OMEGA (TOTAL)≠,30X,2(F10.5,5X))
307.   001524B    999 RETURN
308.   001526B        END
             C ++++++++++++++++++++++++++++++++++++++++++++++++++++++++++++++++++++++++
```

```
1.     000000B         SUBROUTINE WICSPC(FAID,ISTAGE,MMASS,ALFA1,WKDONE,DAV,DELV,WMAS,
                      $WWMAS,N,
                      $OMEGA1,OMEGA2,OMEGA3,OMEGA4,OMEGA5,OMEGA6,OMEGAT,
                      $BETA1,BETA2,VZ,ALFA2,ALFA3,DELTG,DELTW,W1,W2,V1,V2,V3,REAVE,
                      $DELVU2,DELVL2,AK1,AK2,AK3)
2.     000000B         REAL M,MMASS
3.     000000B         COMMON JPERFM,RHOG(3),RERUP,RERLOW,RESUP,RESLOW
                      ^,PREB,RRTIP(20),SRTIP(20),AAA1,AAA2,AAA3,SAREA(20),SAREAS(20)
                      ^,P(3),TG(3),XA,XV(3),XCH4,XW(3),XWW(3),XWT(3),TW(3),TWW(3)
                      ^,OMEGS(20),OMEGR(20),GAPR(20),GAPS(20)
                      ^,RRHUB(20) , RC(20) , RBLADE(20) , STAGER(20)
                      ^,SRHUB(20) , SC(20) , SBLADE(20),STAGES(20)
                      ^,SIGUMR(20) , BET1SR(20) , BET2SR(20) , AINCSR(20) , ADEVSR(20)
                      ^,SIGUMS(20) , BET1SS(20) , BET2SS(20) , AINCSS(20) , ADEVSS(20)
                      ^,UTIPG(20),UTIP(20),UTIPD(20),UOU(20),UMEAN(20),UHUB(20),U(20),FAI
                      ^,AREA(20),AREAS(20),UU2(20),UTIP2(20),UMEAN2(20),UHUB2(20),IPRINT
                      ^,ICENT,IICENT,FMR1(20),FMA2(20),IDESIN,FAID
                      ^,NS,NSF,NSLPC,BYPASS,NS1,RT(20),RM(20),RH(20),ST(20),SM(20),SH(20)
                      ^,DSMASS,AAREA(20),AAREAS(20),PR12D(20),PR13D(20),ETARD(20)
```

```
                    ^,DR(20),DS(20),DEQR(20),DEQS(20),BLOCK(20),BLOCKS(20)
                    ^,BET1MR(20),BET2MR(20),BET1MS(20),BET2MS(20),RADI1(20),RADI2(20)
                    ^,FAIRIN(20),FAIOUT(20),ETASG(20),PSID(20),TAUD(20),SITADR(20)
                    ^,SITADS(20),WWD(20),VVD(20)
 4.   000000B        DIMENSION RHOM(3),ETAA(20)
 5.   000000B        CPW=1.0
 6.   000030B        RHOW=62.3
 7.   000032B        GC=32.174
 8.   000033B        AJ=778.26
 9.   000035B        PAI=3.1415926
10.   000036B        CALL WICPRP(XA,XV(1),XCH4,TG(1),RMIX,CPMIX,GAMMA,G1,G2,G3)
11.   000041B        GAMMA1=GAMMA
12.   000041B        RHOG(1)=P(1)/RMIX/TG(1)
13.   000044B        BMASS=MMASS-WMAS-WWMAS
14.   000050B        AAA2=AREAS(ISTAGE)
15.   000051B        AAA3=AREA(ISTAGE+1)
16.   000053B        IF(NSF.NE.0.AND.ISTAGE.EQ.NSF) AAA3=AAA2
17.   000057B        IF(NSF.NE.0.AND.ISTAGE.EQ.(NSF+NSLPC)) AAA3=AAA2
18.   000064B        IF(ISTAGE.EQ.NS) AAA3=AAA2
19.   000067B        CALL WICMAC(ISTAGE,BMASS,TG(1),P(1),M,VZ,C,XWT(1),ALFA1,
                    $RMIX,CPMIX,AAA1)
20.   000074B        ASPEED=C
21.   000074B        ASPED1=ASPEED
22.   000075B        RHOG(1)=(1.0+G2*M **2)**G3*RHOG(1)
23.   000104B        RHOM(1)=1.0/((1.0-XWT(1))/RHOG(1)+XWT(1)/RHOW)
24.   000111B        VZ1=VZ
25.   000112B        VZZ=VZ
26.   000113B        FAI1=VZ1/UTIPG(ISTAGE)
27.   000115B        ALFA1R = ALFA1 * PAI / 180.0
28.   000120B        V1 = VZ / COS ( ALFA1R )
29.   000123B        VS1 = VZ * TAN ( ALFA1R )
30.   000126B        WS1 = U(ISTAGE)- VS1
31.   000131B        T = WS1 / VZ
32.   000131B        BETA1R = ATAN ( T)
33.   000134B        BETA1 = BETA1R * 180.0 / PAI
34.   000136B        TT = VZ **2 + WS1 **2
35.   000140B        W1 = SQRT ( TT )
36.   000143B        AMACH1 = W1 / ASPEED
37.   000144B        AMAC1=V1/ASPEED
38.   000145B        TS1=TG(1)/(1.0+G2*AMAC1**2)
39.   000151B        PS1=(TG(1)/TS1)**(-G1)*P(1)
40.   000160B        PREL1=(1.0+G2*AMACH1**2)**G1*PS1
41.   000167B        TREL1=(1.0+G2*AMACH1**2)*TS1
42.   000173B        TG(2)=TG(1)
43.   000175B        P(2)=P(1)
44.   000176B        ALFA2=BET1SS(ISTAGE)
45.   000200B        JJJ=1
46.   000202B   2000 VZ2AS=VZ
47.   000203B        CALL WICGSL(SIGUMR(ISTAGE),BET1SR(ISTAGE),BET2SR(
                    $ISTAGE),AINCSR(ISTAGE),ADEVSR(ISTAGE),AMACH1,BETA1,
                    $DEQR(ISTAGE),DEQN,SITADR(ISTAGE),
                    $SITACN,BET2N,OMEGAN,FMR1(ISTAGE),AK1,AK2,AK3,VZ1,
                    $VZ2AS,U(ISTAGE),RADI1(ISTAGE),RADI2(ISTAGE))
48.   000226B        DEQRR=DEQN
49.   000226B        SITACR=SITACN
50.   000230B        OMEGA7=OMEGAN
51.   000231B        BETA2=BET2N
52.   000233B        BETA1R=BETA1*PAI/180.0
53.   000236B        BETA2R=BETA2*PAI/180.0
54.   000237B        BETAVE=(BETA1R+BETA2R)/2.0
```

```
 55.   000241B          TANGT=WICTAN(BETA1R)-WICTAN(BETA2R)
 56.   000247B          CSAV=COS(BETAVE)
 57.   000251B          CS1=COS(BETA1R)
 58.   000253B          CL=2.0/SIGUMR(ISTAGE)*TANGT*CSAV
 59.   000256B          CDS=0.018*(CL**2)
 60.   000260B          OMEGSE=CDS*SIGUMR(ISTAGE)*(CS1**2)/(CSAV**3)
 61.   000265B          H=RRTIP(ISTAGE)-RRHUB(ISTAGE)
 62.   000270B          SHR=RC(ISTAGE)/H/SIGUMR(ISTAGE)
 63.   000271B          CDA=0.020*SHR
 64.   000273B          OMEGAN=CDA*SIGUMR(ISTAGE)*(CS1**2)/(CSAV**3)
 65.   000300B          IF(IPRINT.EQ.2) WRITE(6,2001) OMEGA1,OMEGSE,OMEGAN,OMEGA7,CDS,CDA
 66.   000315B    2001 FORMAT(1H0,6F10.6)
 67.   000315B          OMEA1=OMEGAN
 68.   000315B          AINCIR=BETA1-BET1MR(ISTAGE)
 69.   000320B          ADEVIR=BET2N-BET2MR(ISTAGE)
 70.   000323B          BETA2R=BETA2*PAI/180.0
 71.   000325B          W2=VZ/COS(BETA2R)
 72.   000330B          UG=(W1+W2)/2.0
 73.   000333B          CALL WICRSL(SIGUMR(ISTAGE),BETA1,BETA2,RC(ISTAGE),DAV,CDR,OMEGAR)
 74.   000343B          OMEGA1=OMEGAR
 75.   000343B          DELP1=OMEGA1*0.5*RHOG(1)/GC*(W1**2)
 76.   000351B          IF(IPRINT.EQ.2) WRITE(6,2002) OMEGA1,DELP1
 77.   000351B    2002 FORMAT(1H ,1X,≠OMEGA1=≠,2F10.5)
 78.   000361B          XG=1.0-XWT(1)
 79.   000362B          CALL WICIRL(ISTAGE,RRTIP(ISTAGE),XWW(1),XG,RHOG(1),BETA1,W1,WW1,WW
                       $2,WW)
 80.   000371B          BMIMPR=WW
 81.   000371B          IF(BMIMPR.GT.WWMAS) BMIMPR=WWMAS
 82.   000375B          BMREBR=BMIMPR*PREB/100.0
 83.   000377B          BMWAKR=BMIMPR*(1.0-PREB/100.0)
 84.   000401B          BMNOIR=WWMAS-BMIMPR
 85.   000402B          XWWNOR=BMNOIR/MMASS
 86.   000403B          XWWRER=BMREBR/MMASS
 87.   000405B          XWWWAR=BMWAKR/MMASS
 88.   000406B          IF(IPRINT.EQ.2) WRITE(6,6090) BMIMPR,BMREBR,BMWAKR,BMNOIR,XWWNOR,
                       $XWWRER,XWWWAR
 89.   000424B    6090 FORMAT(1H ,7(F12.5,1X))
 90.   000424B          RST1=RADI1(ISTAGE)**2-AAA1*144.0/2.0/PAI
 91.   000430B          RST1=SQRT(RST1)
 92.   000433B          RST2=2.0*RADI1(ISTAGE)**2-RST1**2
 93.   000435B          RST2=SQRT(RST2)
 94.   000440B          DELR=(RST2-RST1)/12.0
 95.   000442B          FMASSR=BMWAKR/DELR
 96.   000443B          CALL WICFML(W1,W2,FMASSR,RHOG(1),RC(ISTAGE),SIGUMR(ISTAGE),BETA1,
                       $BETA2,CDF,OMEGAF)
 97.   000455B          OMEGA2=OMEGAF
 98.   000455B          DELP2=OMEGA2*0.5*RHOG(1)/GC*(W1**2)
 99.   000463B          IF(IPRINT.EQ.2) WRITE(6,6091) OMEGA2,DELP2
100.   000473B    6091 FORMAT(1H ,1X,≠OMEGA2=≠,2F10.5)
101.   000473B          V2=0.0
102.   000473B          V3=0.0
103.   000473B          ALFA=0.0
104.   000474B          ALFA3=0.0
105.   000475B          CALL WICSTL(ISTAGE,1,DAV,W1,W2,DELV,V2,V3,WWMAS,VZ,N,BETA1,BETA2,
                       $ALFA2,ALFA3,DELVU2,DELVL2,OMEGRU,OMEGRL,OMEGSU,OMEGSL,
                       $DRAGRU,DRAGRL,DRAGSU,DRAGSL,REAVE)
106.   000520B          OMEGA3=OMEGRU+OMEGRL
107.   000521B          DELP3=OMEGA3*0.5*RHOG(1)/GC*(W1**2)
108.   000526B          IF(IPRINT.EQ.2) WRITE(6,6092) OMEGA3,DELP3
109.   000536B    6092 FORMAT(1H ,1X,≠OMEGA3=≠,2F10.5)
```

```
110.   000536B        REAVE1=REAVE
111.   000536B        BETA2R = BETA2 * PAI / 180.0
112.   000541B        JJ=1
113.   000543B    200 VZAS=VZ
114.   000544B        WS2 = VZ * TAN ( BETA2R )
115.   000547B        VS2 = UU2(ISTAGE) - WS2
116.   000552B        TTT=VS2/VZ
117.   000552B        ALFA2R = ATAN ( TTT )
118.   000555B        ALFA2 = ALFA2R * 180.0 / PAI
119.   000557B        TTTT = VZ ** 2 + WS2 ** 2
120.   000561B        W2 = SQRT ( TTTT )
121.   000564B        TTTTT = VZ ** 2 + VS2 ** 2
122.   000566B        V2 = SQRT ( TTTTT )
123.   000571B        DELH=WKDONE*(UU2(ISTAGE)*VS2-U(ISTAGE)*VS1)/GC/AJ
124.   000577B        CALL WICIRS(ISTAGE,RRTIP(ISTAGE),XW(1),XG,RHOG(1),BETA1,W1,WW1,
                     $WW2,WW)
125.   000606B        AMIMPR=WW
126.   000606B        IF(AMIMPR.GT.WMAS) AMIMPR=WMAS
127.   000612B        PREB=50.0
128.   000612B        AMREBR=AMIMPR*PREB/100.0
129.   000615B        AMWAKR=AMIMPR*(1.0-PREB/100.0)
130.   000617B        AMNOIR=WMAS-AMIMPR
131.   000620B        XW1=0.0
132.   000621B        XW2=0.0
133.   000621B        XW3=0.0
134.   000622B        IF(WMAS.GT.0.0) XW1=AMNOIR/WMAS
135.   000626B        IF(WMAS.GT.0.0) XW2=AMWAKR/WMAS
136.   000631B        IF(WMAS.GT.0.0) XW3=AMREBR/WMAS
137.   000634B        DELTG=DELH/CPMIX
138.   000635B        DELTW1=DELH/CPW
139.   000636B        DELTW2=DELH/CPW
140.   000637B        DELTW3=0.0
141.   000640B        DELTW=XW1*DELTW1+XW2*DELTW2+XW3*DELTW3
142.   000646B        DETWW1=0.0
143.   000647B        DETWW2=0.0
144.   000647B        DETWW3=0.0
145.   000650B        DELTWW=0.0
146.   000650B        TW(2)=TW(1)+DELTW
147.   000652B        TWW(2)=TWW(1)+DELTWW
148.   000654B        TG(2)=TG(1)+DELTG
149.   000656B        TS2=TG(2)-V2**2/(2.0*CPMIX*GC*AJ)
150.   000664B        AG2=(GAMMA*RMIX*TS2*GC)**0.5
151.   000672B        ASPEED=WICASD(XWT(1),RHOG(1),AG2)
152.   000674B        ASPED2=ASPEED
153.   000674B        AMAC2=V2/ASPEED
154.   000676B        AMACH2=W2/ASPEED
155.   000677B        PP1=GAMMA*RMIX*TREL1*GC
156.   000703B        PP2=(UU2(ISTAGE)/U(ISTAGE))**2-1.0
157.   000707B        PP3=1.0+G2*U(ISTAGE)**2/PP1*PP2
158.   000713B        PP=PP3**G1
159.   000716B        PRREL=PP-(OMEGA7+OMEGA1+OMEGA2+OMEGA3)*(1.0-PS1/PREL1)
160.   000726B        PR12=(TG(2)/TG(1))**G1*PRREL/PP
161.   000734B        ETAR=(PR12**(1.0/G1)-1.0)/(TG(2)/TG(1)-1.0)
162.   000745B        P(2)=PR12*P(1)
163.   000747B        PS2=(1.0+G2*AMAC2**2)**(-G1)*P(2)
164.   000760B        RHOG2=PS2/RMIX/TS2
165.   000763B        RHOG(2)=RHOG2
166.   000763B        RHOM2=1.0/(XG/RHOG2+XWT(1)/RHOW)
167.   000770B        VZ=BMASS/RHOG2/AAA2
168.   000772B        VZ2=VZ
```

```
000772B          EPS=1.0E-4
000773B          IF(JJ.EQ.2) GO TO 201
000776B          IF(JJ.GT.2) GO TO 202
001000B          X1=VZAS
001001B          Y1=VZ2
001002B          VZ=VZ2
001003B          JJ=JJ+1
001005B          IF(VZ.LT.0.0.OR.VZ.GT.ASPEED) GO TO 999
001011B          GO TO 200
001012B      201 X2=VZAS
001012B          Y2=VZ2
001014B          VZ=WICNEW(X1,Y1,X2,Y2)
001017B          IF(IPRINT.EQ.2) WRITE(6,203) JJ,VZ
001027B      203 FORMAT(1H ,1X,I1,2X,≠VZ2=≠,F10.5)
001027B          JJ=JJ+1
001030B          IF(VZ.LT.0.0.OR.VZ.GT.ASPEED) GO TO 999
001034B          GO TO 200
001034B      202 IF(ABS((VZAS-VZ2)/VZAS).LT.EPS) GO TO 300
001041B          X1=X2
001041B          Y1=Y2
001043B          X2=VZAS
001044B          Y2=VZ2
001046B          VZ=WICNEW(X1,Y1,X2,Y2)
001050B          IF(IPRINT.EQ.2) WRITE(6,204) JJ,VZ
001060B      204 FORMAT(1H0,1X,I1,2X,≠VZ2=≠,F10.5)
001060B          JJ=JJ+1
001061B          IF(VZ.LT.0.0.OR.VZ.GT.ASPEED) GO TO 999
001065B          IF(JJ.EQ.20) GO TO 999
001066B          GO TO 200
001067B      300 VZ2CL=VZ
001070B          IF(JJJ.EQ.2) GO TO 2010
001073B          IF(JJJ.GT.2) GO TO 2020
001075B          XX1=VZ2AS
001076B          YY1=VZ2CL
001077B          JJJ=JJJ+1
001101B          GO TO 2000
001102B     2010 XX2=VZ2AS
001103B          YY2=VZ2CL
001105B          VZ=WICNEW(XX1,YY1,XX2,YY2)
001110B          IF(IPRINT.EQ.2) WRITE(6,2030) JJJ,VZ
001120B     2030 FORMAT(1H ,1X,I2,≠VZ22=≠,F10.5)
001120B          JJJ=JJJ+1
001121B          GO TO 2000
001121B     2020 IF(ABS((VZ2AS-VZ2CL)/VZ2AS).LT.EPS) GO TO 3000
001126B          XX1=XX2
001126B          YY1=YY2
001130B          XX2=VZ2AS
001131B          YY2=VZ2CL
001133B          VZ=WICNEW(XX1,YY1,XX2,YY2)
001135B          IF(IPRINT.EQ.2) WRITE(6,2040) JJJ,VZ
001145B     2040 FORMAT(1H ,1X,I2,≠VZ22=≠,F10.5)
001145B          JJJ=JJJ+1
001146B          IF(JJJ.EQ.20) GO TO 3000
001147B          GO TO 2000
001150B     3000 VZ2=VZ2CL
001150B          FAI2=VZ2/UTIPG(ISTAGE)
001152B          P(2)=(1.0+G2*AMAC2**2)**G1*PS2
001161B          JJJJ=1
001163B     3001 VZ3AS=VZ
001164B          IF(ISTAGE.EQ.NS) RADI1(ISTAGE+1)=RADI2(ISTAGE)
```

```
229.   001171B        CALL WICGSL(SIGUMS(ISTAGE),BET1SS(ISTAGE),BET2SS
                     $(ISTAGE),AINCSS(ISTAGE),ADEVSS(ISTAGE),AMAC2,ALFA2,
                     $DEQS(ISTAGE),DEQN,SITADS(ISTAGE),
                     $SITACN,BET2N,OMEGAN,FMA2(ISTAGE),AK1,AK2,AK3,VZ2,
                     $VZ3AS,0.0,RADI2(ISTAGE),RADI1(ISTAGE+1))
230.   001211B        DEQSS=DEQN
231.   001211B        SITACS=SITACN
232.   001213B        DEQT=DEQRR+DEQSS
233.   001215B        SITACT=SITACR+SITACS
234.   001217B        OMEGA8=OMEGAN
235.   001220B        ALFA3=BET2N
236.   001221B        ALFA1R=ALFA2*PAI/180.0
237.   001224B        ALFA2R=ALFA3*PAI/180.0
238.   001226B        ALFAAV=(ALFA1R+ALFA2R)/2.0
239.   001230B        TANGT=WICTAN(ALFA1R)-WICTAN(ALFA2R)
240.   001236B        CSAV=COS(ALFAAV)
241.   001240B        CS1=COS(ALFA1R)
242.   001242B        CL=2.0/SIGUMS(ISTAGE)*TANGT*CSAV
243.   001245B        CDS=0.018*(CL**2)
244.   001247B        OMEGSE=CDS*SIGUMS(ISTAGE)*(CS1**2)/(CSAV**3)
245.   001254B        H=SRTIP(ISTAGE)-SRHUB(ISTAGE)
246.   001257B        SHR=SC(ISTAGE)/H/SIGUMR(ISTAGE)
247.   001261B        CDA=0.020*SHR
248.   001263B        OMEGAN=CDA*SIGUMS(ISTAGE)*(CS1**2)/(CSAV**3)
249.   001270B        IF(IPRINT.EQ.2) WRITE(6,3002)
                     $OMEGA4,OMEGSE,OMEGAN,OMEGA8,CDS,CDA
250.   001305B   3002 FORMAT(1H0,6F10.5)
251.   001305B        OMES2=OMEGSE
252.   001305B        OMEA2=OMEGAN
253.   001307B        AINCIS=ALFA2-BET1MS(ISTAGE)
254.   001312B        ADEVIS=BET2N-BET2MS(ISTAGE)
255.   001314B        ALFA3R=ALFA3*PAI/180.0
256.   001317B        V3=VZ/COS(ALFA3R)
257.   001321B        CALL WICRSL(SIGUMS(ISTAGE),ALFA2,ALFA3,SC(ISTAGE),DAV,CDR,OMEGAR)
258.   001332B        OMEGA4=OMEGAR
259.   001332B        DELP4=OMEGA4*0.5*RHOG(2)/GC*(V2**2)
260.   001340B        IF(IPRINT.EQ.2) WRITE(6,3003) OMEGA4,DELP4
261.   001350B   3003 FORMAT(1H ,1X,≠OMEGA4=≠,2F10.5)
262.   001350B        CALL WICISL(ISTAGE,SRTIP(ISTAGE),XWW(2),XG,RHOG(2),ALFA2,V2,WW1
                     $,WW2,WW)
263.   001356B        BMIMPS=WW
264.   001356B        IF(BMIMPS.GT.WWMAS) BMIMPS=WWMAS
265.   001362B        BMREBS=BMIMPS*PREB/100.0
266.   001364B        BMWAKS=BMIMPS*(1.0-PREB/100.0)
267.   001366B        IF(IPRINT.EQ.2) WRITE(6,6616)
268.   001374B   6616 FORMAT(1H ,1X,≠IMPINS≠)
269.   001374B        IF(IPRINT.EQ.2) WRITE(6,6617) XWW(2),XA,RHOG(2),VZ,WW,BMIMPS,BM
                     $REBS,BMWAKS
270.   001411B   6617 FORMAT(1H ,8(F12.5,1X))
271.   001411B        RST1=RADI2(ISTAGE)**2-AAA2*144.0/2.0/PAI
272.   001415B        RST1=SQRT(RST1)
273.   001420B        RST2=2.0*RADI2(ISTAGE)**2-RST1**2
274.   001422B        RST2=SQRT(RST2)
275.   001425B        DELR=(RST2-RST1)/12.0
276.   001427B        FMASSS=BMWAKS/DELR
277.   001430B        CALL WICFML(V2,V3,FMASSS,RHOG2,SC(ISTAGE),SIGUMS(ISTAGE),BETA1,
                     $BETA2,CDF,OMEGAF)
278.   001442B        OMEGA5=OMEGAF
279.   001442B        DELP5=OMEGA5*0.5*RHOG(2)/GC*(V2**2)
280.   001450B        IF(IPRINT.EQ.2) WRITE(6,6618) OMEGA5,DELP5
```

```
001460B   6618 FORMAT(1H ,1X,≠OMEGA5=≠,2F10.5)
001460B        CALL WICSTL(ISTAGE,2,DAV,W1,W2,DELV,V2,V3,WWMAS,VZ,N,BETA1,BETA2,
              $ALFA2,ALFA3,DELVU2,DELVL2,OMEGRU,OMEGRL,OMEGSU,OMEGSL,
              $DRAGRU,DRAGRL,DRAGSU,DRAGSL,REAVE)
001503B        OMEGA6=OMEGSU+OMEGSL
001504B        DELP6=OMEGA6*0.5*RHOG(2)/GC*(V2**2)
001511B        IF(IPRINT.EQ.2) WRITE(6,6619) OMEGA6,DELP6
001521B   6619 FORMAT(1H ,1X,≠OMEGA6=≠,2F10.5)
001521B        REAVE2=REAVE
001521B        REAVE=(REAVE1+REAVE2)*0.5
001524B        PR23=1.0-(OMEGA8+OMEGA4+OMEGA5+OMEGA6)*(1.0-PS2/P(2))
001534B        PR13=(TG(2)/TG(1))**G1*PRREL*PR23/PP
001543B        P(3)=PR13*P(1)
001545B        TG(3)=TG(2)
001546B        TS3=TG(3)-V3**2/(2.0*CPMIX*GC*AJ)
001554B        AG3=(GAMMA*RMIX*TS3*GC)**0.5
001562B        ASPEED=WICASD(XWT(1),RHOG(2),AG3)
001564B        ASPED3=ASPEED
001564B        AMAC3=V3/ASPEED
001566B        PS3=(1.0+G2*AMAC3**2)**(-G1)*P(3)
001576B        RHOG3=PS3/RMIX/TS3
001601B        RHOG(3)=RHOG3
001601B        RHOM3=1.0/(XG/RHOG3+XWT(1)/RHOW)
001606B        VZ=BMASS/RHOG3/AAA3
001610B        VZ3CL=VZ
001610B        IF(JJJJ.EQ.2) GO TO 3010
001612B        IF(JJJJ.GT.2) GO TO 3020
001614B        XXX1=VZ3AS
001615B        YYY1=VZ3CL
001617B        JJJJ=JJJJ+1
001620B        GO TO 3001
001621B   3010 XXX2=VZ3AS
001622B        YYY2=VZ3CL
001624B        VZ=WICNEW(XXX1,YYY1,XXX2,YYY2)
001627B        IF(IPRINT.EQ.2) WRITE(6,3030) JJJJ,VZ
001637B   3030 FORMAT(1H ,1X,I2,2X,≠VZ33=≠,F10.5)
001637B        JJJJ=JJJJ+1
001640B        GO TO 3001
001640B   3020 IF(ABS((VZ3AS-VZ3CL)/VZ3AS).LT.EPS) GO TO 4000
001645B        XXX1=XXX2
001645B        YYY1=YYY2
001647B        XXX2=VZ3AS
001650B        YYY2=VZ3CL
001652B        VZ=WICNEW(XXX1,YYY1,XXX2,YYY2)
001654B        IF(IPRINT.EQ.2) WRITE(6,3040) JJJJ,VZ
001664B   3040 FORMAT(1H ,1X,I2,≠VZ33=≠,F10.5)
001664B        JJJJ=JJJJ+1
001665B        IF(JJJJ.EQ.20) GO TO 4000
001666B        GO TO 3001
001667B   4000 VZ3=VZ3CL
001667B        FAI3=VZ3/UTIPG(ISTAGE+1)
001671B        TW(3)=TW(2)
001673B        TWW(3)=TW(2)
001674B        OMEGTR=OMEGA1+OMEGA2+OMEGA3+OMEGA7
001700B        OMEGTS=OMEGA4+OMEGA5+OMEGA6+OMEGA8
001704B        PRATIO=P(3)/P(1)
001706B        TRATIO=TG(3)/TG(1)
001710B        CALL WICPRP(XA,XV(3),XCH4,TG(3),RMIX,CPMIX,GAMMA,G1,G2,G3)
001713B        GAMMA2=GAMMA
001713B        GAMMAV=(GAMMA1+GAMMA2)/2.0
```

```
339.   001716B        G4=(GAMMAV-1.0)/GAMMAV
340.   001720B        ETAA(ISTAGE)=(PRATIO**G4-1.0)/(TRATIO-1.0)
341.   001726B        PSI=GC*AJ*CPMIX*ETAA(ISTAGE)*(TG(2)-TG(1))/(UTIPG(ISTAGE)**2)
342.   001737B        TAU=PSI/ETAA(ISTAGE)
343.   001740B        IF(IDESIN.EQ.2) GO TO 999
344.   001743B        WRITE(6,404) FAIO,ISTAGE
345.   001751B    404 FORMAT(1H1,1X,≠******************  ≠,1X,
                     $≠INITIAL FLOW COEFFICIENT-≠,1X,F5.3,1X,≠(STAGE=≠,I2,1X,
                     $≠)≠,2X,≠*******************≠)
346.   001751B        WRITE(6,401) PRATIO,TRATIO,ETAA(ISTAGE)
347.   001760B    401 FORMAT(1H0,5X,≠STAGE TOTAL PRESSURE RATIO=≠,F12.5,/,
                     $6X,≠STAGE TOTAL TEMPERATURE RATIO=≠,F12.5,/,
                     $6X,≠STAGE ADIABATIC EFFICIENCY=≠,F12.5)
348.   001760B        WRITE(6,402) FAI1,VZ1,UTIPG(ISTAGE)
349.   001767B    402 FORMAT(1H0,5X,≠STAGE FLOW COEFFICIENT=≠,F5.3,/,
                     $6X,≠AXIAL VELOCITY=≠,F7.2,/,
                     $6X,≠ROTOR SPEED=≠,F7.2,/)
350.   001767B        WRITE(6,405)
351.   001772B    405 FORMAT(1H0,24X,≠*ROTOR INLET* *ROTOR OUTLET* *STATOR OUTLET*≠)
352.   001772B        WRITE(6,406) P(1),P(2),P(3)
353.   002000B    406 FORMAT(1H ,1X,≠TOTAL PRESSURE≠,10X,3(F10.4,5X))
354.   002000B        WRITE(6,407) PS1,PS2,PS3
355.   002006B    407 FORMAT(1H ,1X,≠STATIC PRESSURE≠,9X,3(F10.4,5X))
356.   002006B        WRITE(6,408) TG(1),TG(2),TG(3)
357.   002014B    408 FORMAT(1H ,1X,≠TOTAL TEMPERATURE(GAS)≠,3X,3(F10.4,5X))
358.   002014B        WRITE(6,409) TS1,TS2,TS3
359.   002022B    409 FORMAT(1H ,1X,≠STATIC TEMPERATURE(GAS)≠,1X,3(F10.4,5X))
360.   002022B        WRITE(6,410) RHOG(1),RHOG2,RHOG3
361.   002030B    410 FORMAT(1H ,1X,≠STATIC DENSITY(GAS)≠,5X,3(F10.4,5X))
362.   002030B        WRITE(6,411) RHOM(1),RHOM2,RHOM3
363.   002036B    411 FORMAT(1H ,1X,≠STATIC DENSITY(MIXTURE)≠,1X,3(F10.4,5X))
364.   002036B        WRITE(6,412) VZ1,VZ2,VZ3
365.   002044B    412 FORMAT(1H0,1X,≠AXIAL VELOCITY≠,10X,3(F10.4,5X))
366.   002044B        WRITE(6,413) V1,V2,V3
367.   002052B    413 FORMAT(1H ,1X,≠ABSOLUTE VELOCITY≠,7X,3(F10.4,5X))
368.   002052B        WRITE(6,414) W1,W2
369.   002057B    414 FORMAT(1H ,1X,≠RELATIVE VELOCITY≠,7X,2(F10.4,5X))
370.   002057B        WRITE(6,415) U(ISTAGE),UU2(ISTAGE),U(ISTAGE+1)
371.   002070B    415 FORMAT(1H ,1X,≠BLADE SPEED≠,13X,3(F10.4,5X))
372.   002070B        WRITE(6,416) VS1,VS2
373.   002075B    416 FORMAT(1H ,1X,≠TANG. COMP. OF ABS. VEL.≠,2(F10.4,5X))
374.   002075B        WRITE(6,417) WS1,WS2
375.   002102B    417 FORMAT(1H ,1X,≠TANG. COMP. OF REL. VEL.≠,2(F10.4,5X))
376.   002102B        WRITE(6,418) ASPED1,ASPED2,ASPED3
377.   002110B    418 FORMAT(1H ,1X,≠ACOUSTIC SPEED≠,10X,3(F10.4,5X))
378.   002110B        WRITE(6,419) AMAC1,AMAC2,AMAC3
379.   002116B    419 FORMAT(1H ,1X,≠ABSOLUTE MACH NUMBER≠,4X,3(F10.4,5X))
380.   002116B        WRITE(6,420) AMACH1,AMACH2
381.   002123B    420 FORMAT(1H ,1X,≠RELATIVE MACH NUMBER≠,4X,2(F10.4,5X))
382.   002123B        WRITE(6,421) FAI1,FAI2,FAI3
383.   002131B    421 FORMAT(1H0,1X,≠FLOW COEFFICIENT≠,8X,3(F10.4,5X))
384.   002131B        WRITE(6,422) AAA1,AAA2,AAA3
385.   002137B    422 FORMAT(1H ,1X,≠FLOW AREA≠,15X,3(F10.4,5X))
386.   002137B        WRITE(6,423) ALFA1,ALFA2,ALFA3
387.   002145B    423 FORMAT(1H0,1X,≠ABSOLUTE FLOW ANGLE≠,5X,3(F10.4,5X))
388.   002145B        WRITE(6,424) BETA1,BETA2
389.   002152B    424 FORMAT(1H ,1X,≠RELATIVE FLOW ANGLE≠,5X,3(F10.4,5X))
390.   002152B        WRITE(6,425) AINCIR,AINCIS
391.   002157B    425 FORMAT(1H ,1X,≠INCIDENCE≠,16X,2(F10.4,5X))
392.   002157B        WRITE(6,426) ADEVIR,ADEVIS
```

```
393.   002164B    426 FORMAT(1H ,1X,≠DEVIATION≠,30X,2(F10.4,5X))
394.   002164B    999 RETURN
395.   002166B        END
             C++++++++++++++++++++++++++++++++++++++++++++++++++++++++++++++++++++++++

 1.    000000B        SUBROUTINE WICMAC(ISTAGE,AMASSM,T01G,PRES,M,VZ,C,XW1,ALFA,
                     $RMIX,CPMIX,AREA1)
 2.    000000B        REAL M ,MA1,MC1,MA2,MC2,MANEW,MCNEW
 3.    000000B        COMMON JPERFM,RHOG(3),RERUP,RERLOW,RESUP,RESLOW
                     ^,PREB,RRTIP(20),SRTIP(20),AAA1,AAA2,AAA3,SAREA(20),SAREAS(20)
                     ^,P(3),TG(3),XA,XV(3),XCH4,XW(3),XWW(3),XWT(3),TW(3),TWW(3)
                     ^,OMEGS(20),OMEGR(20),GAPR(20),GAPS(20)
                     ^,RRHUB(20) , RC(20) , RBLADE(20) , STAGER(20)
                     ^,SRHUB(20) , SC(20) , SBLADE(20),STAGES(20)
                     ^,SIGUMR(20) , BET1SR(20) , BET2SR(20) , AINCSR(20) , ADEVSR(20)
                     ^,SIGUMS(20) , BET1SS(20) , BET2SS(20) , AINCSS(20) , ADEVSS(20)
                     ^,UTIPG(20),UTIP(20),UTIPD(20),UOU(20),UMEAN(20),UHUB(20),U(20),FAI
                     ^,AREA(20),AREAS(20),UU2(20),UTIP2(20),UMEAN2(20),UHUB2(20),IPRINT
                     ^,ICENT,IICENT,FMR1(20),FMA2(20),IDESIN,FAID
                     ^,NS,NSF,NSLPC,BYPASS,NS1,RT(20),RM(20),RH(20),ST(20),SM(20),SH(20)
                     ^,DSMASS,AAREA(20),AAREAS(20),PR12D(20),PR13D(20),ETARD(20)
                     ^,DR(20),DS(20),DEQR(20),DEQS(20),BLOCK(20),BLOCKS(20)
                     ^,BET1MR(20),BET2MR(20),BET1MS(20),BET2MS(20),RADI1(20),RADI2(20)
                     ^,FAIRIN(20),FAIOUT(20),ETASG(20),PSID(20),TAUD(20),SITADR(20)
                     ^,SITADS(20),WWD(20),VVD(20)
 4.    000000B        GAMMA=1.0/(1.0-RMIX/CPMIX/778.0)
 5.    000011B        G2=(GAMMA-1.0)/2.0
 6.    000013B        G3=-1.0/(GAMMA-1.0)
 7.    000015B        MA1=0.5
 8.    000016B        RHOG1=PRES/RMIX/T01G
 9.    000020B        RHOGS=(1.0+G2*MA1**2)**G3*RHOG1
10.    000027B        RHOW=62.4
11.    000031B        RHOMS=1.0/((1.0-XW1)/RHOGS+XW1/RHOW)
12.    000036B        TS=T01G/(1.0+G2*MA1**2)
13.    000041B        A=SQRT(GAMMA*RMIX*TS*32.174)
14.    000047B        C=WICASD(XW1,RHOGS,A)
15.    000052B        IF(JPERFM.NE.3) VZ=AMASSM/RHOMS/AREA1
16.    000060B        IF(JPERFM.EQ.3) VZ=AMASSM/RHOGS/AREA1
17.    000064B        IF(AMASSM.LT.0.001) VZ=UTIPG(ISTAGE)*FAI
18.    000071B        ALFAR=ALFA*3.1415927/180.0
19.    000073B        MC1=VZ/C/COS(ALFAR)
20.    000076B        MA2=0.6
21.    000100B        RHOGS=(1.0+G2*MA2**2)**G3*RHOG1
22.    000106B        RHOMS=1.0/((1.0-XW1)/RHOGS+XW1/RHOW)
23.    000113B        TS=T01G/(1.0+G2*MA2**2)
24.    000117B        A=SQRT(GAMMA*RMIX*TS*32.174)
25.    000125B        C=WICASD(XW1,RHOGS,A)
26.    000130B        IF(JPERFM.NE.3) VZ=AMASSM/RHOMS/AREA1
27.    000136B        IF(JPERFM.EQ.3) VZ=AMASSM/RHOGS/AREA1
28.    000142B        IF(AMASSM.LT.0.001) VZ=UTIPG(ISTAGE)*FAI
29.    000147B        MC2=VZ/C/COS(ALFAR)
30.    000152B        J=1
31.    000154B    300 MANEW=WICNEW(MA1,MC1,MA2,MC2)
32.    000157B        RHOGS=(1.0+G2*MANEW**2)**G3*RHOG1
33.    000165B        RHOMS=1.0/((1.0-XW1)/RHOGS+XW1/RHOW)
34.    000172B        TS=T01G/(1.0+G2*MANEW**2)
35.    000176B        A=SQRT(GAMMA*RMIX*TS*32.174)
36.    000204B        C=WICASD(XW1,RHOGS,A)
37.    000207B        IF(JPERFM.NE.3) VZ=AMASSM/RHOMS/AREA1
38.    000215B        IF(JPERFM.EQ.3) VZ=AMASSM/RHOGS/AREA1
```

```
39.   000221B        IF(AMASSM.LT.0.001) VZ=UTIPG(ISTAGE)*FAI
40.   000226B        MCNEW=VZ/C/COS(ALFAR)
41.   000231B        ERROR=ABS(MANEW-MCNEW)
42.   000234B        ERROR=ERROR/MANEW
43.   000235B        EPS=1.0E-6
44.   000236B        IF(ERROR.LT.EPS) GO TO 200
45.   000237B        MA1=MA2
46.   000240B        MC1=MC2
47.   000242B        MA2=MANEW
48.   000243B        MC2=MCNEW
49.   000245B        J=J+1
50.   000246B        IF(J.LT.50) GO TO 300
51.   000247B        WRITE(6,403) ISTAGE
52.   000254B    403 FORMAT(1H0,≠MZ DOES NOT CONVERGE AT STAGE=≠,I1)
53.   000254B        GO TO 998
54.   000254B    200 M=MANEW
55.   000255B        IF(AMASSM.LT.0.001) ISTAGE=0
56.   000262B    998 RETURN
57.   000264B        END
            C++++++++++++++++++++++++++++++++++++++++++++++++++++++++++++++++++++

 1.   000000B        FUNCTION WICASD ( XW , RHOG , CG )
 2.   000000B        RHOW=62.2567
 3.   000001B        CW = 4956.04
 4.   000003B        SIGUMA = ( XW * RHOG ) / ( RHOW - XW * ( RHOW - RHOG ))
 5.   000007B        A1 = ( 1.0-SIGUMA ) * RHOG + SIGUMA * RHOW
 6.   000012B        A2 = ( 1.0- SIGUMA ) / ( RHOG * CG* CG )
 7.   000016B        A3 = SIGUMA / ( RHOW * CW* CW)
 8.   000017B        A4 = A1 * ( A2 + A3)
 9.   000021B        WICASD = 1.0/ SQRT ( A4 )
10.   000024B        RETURN
11.   000027B        END
            C++++++++++++++++++++++++++++++++++++++++++++++++++++++++++++++++++++
            C ++++++++++++++++++++++++++++++++++++++++++++++++++++++++++++++++++
            C ++++++++++++++++++++++++++++++++++++++++++++++++++++++++++++++++++

 1.   000000B        FUNCTION WICED(AK3,VZ1,VZ2,UR1,R1,R2,BET1,BET2,SIGUMA,AINCIS,
                    $AINCI)
 2.   000000B        C1=180.0/3.1415926
 3.   000001B        BET1R=BET1/C1
 4.   000003B        BET2R=BET2/C1
 5.   000004B        CSB1=COS(BET1R)
 6.   000007B        CSB2=COS(BET2R)
 7.   000011B        CSCS=CSB2/CSB1*(VZ1/VZ2)
 8.   000014B        TNB1=WICTAN(BET1R)
 9.   000017B        TNB2=WICTAN(BET2R)*(VZ2/VZ1)*(R2/R1)
10.   000026B        TNTN=TNB1-TNB2-(UR1/VZ1)*(1.0-(R2/R1)**2)
11.   000035B        DEQ1=0.0117*(ABS(AINCI-AINCIS))**1.43
12.   000044B        DEQ2=0.61*(CSB1**2 0)/SIGUMA*TNTN
13.   000051B        WICED=CSCS*AK3*(1.12+DEQ1+DEQ2)
14.   000056B        RETURN
15.   000060B        END
            C ++++++++++++++++++++++++++++++++++++++++++++++++++++++++++++++++++

 1.   000000B        FUNCTION WICMTK(SITACS,AMACH1,DELDEQ,AK2)
 2.   000000B        IF(DELDEQ.LT.0.0) GO TO 10
 3.   000003B        A1=0.827*AMACH1
 4.   000004B        A2=2.692*(AMACH1**2)
 5.   000005B        A3=2.675*(AMACH1**3)
 6.   000007B        A=A1-A2+A3
```

```
 7.   000012B        WICMTK=SITACS+A*(DELDEQ**2)*AK2
 8.   000016B        GO TO 11
 9.   000017B     10 B1=2.80*AMACH1
10.   000020B        B2=8.71*(AMACH1**2)
11.   000021B        B3=9.36*(AMACH1**3)
12.   000023B        B=B1-B2+B3
13.   000026B        WICMTK=SITACS+B*(DELDEQ**2)*AK2
14.   000032B     11 RETURN
15.   000036B        END
            C ++++++++++++++++++++++++++++++++++++++++++++++++++++++++++++++++

 1.   000000B        FUNCTION WICLOS(BET1,BET2,SIGUMA,SITA)
 2.   000000B        C1=180.0/3.1415926
 3.   000001B        BET1R=BET1/C1
 4.   000003B        BET2R=BET2/C1
 5.   000004B        CSB1=COS(BET1R)
 6.   000007B        CSB2=COS(BET2R)
 7.   000011B        CSCS=CSB1/CSB2
 8.   000012B        WICLOS=SITA*2.0*SIGUMA/CSB2*(CSCS**2)
 9.   000016B        RETURN
10.   000020B        END
            C ++++++++++++++++++++++++++++++++++++++++++++++++++++++++++++++++++++++

 1.   000000B        SUBROUTINE WICIRS(ISTAGE,R,XW1,XG,RHOG1,BETA1,W1,
                    1WW1 , WW2 , WW )
 2.   000000B        REAL LWC
 3.   000000B        COMMON JPERFM,RHOG(3),RERUP,RERLOW,RESUP,RESLOW
                    ^,PREB,RRTIP(20),SRTIP(20),AAA1,AAA2,AAA3,SAREA(20),SAREAS(20)
                    ^,P(3),TG(3),XA,XV(3),XCH4,XW(3),XWW(3),XWT(3),TW(3),TWW(3)
                    ^,OMEGS(20),OMEGR(20),GAPR(20),GAPS(20)
                    ^,RRHUB(20) , RC(20) , RBLADE(20) , STAGER(20)
                    ^,SRHUB(20) , SC(20) , SBLADE(20),STAGES(20)
                    ^,SIGUMR(20) , BET1SR(20) , BET2SR(20) , AINCSR(20) , ADEVSR(20)
                    ^,SIGUMS(20) , BET1SS(20) , BET2SS(20) , AINCSS(20) , ADEVSS(20)
                    ^,UTIPG(20),UTIP(20),UTIPD(20),UOU(20),UMEAN(20),UHUB(20),U(20),FAI
                    ^,AREA(20),AREAS(20),UU2(20),UTIP2(20),UMEAN2(20),UHUB2(20),IPRINT
                    ^,ICENT,IICENT,FMR1(20),FMA2(20),IDESIN,FAID
                    ^,NS,NSF,NSLPC,BYPASS,NS1,RT(20),RM(20),RH(20),ST(20),SM(20),SH(20)
                    ^,DSMASS,AAREA(20),AAREAS(20),PR12D(20),PR13D(20),ETARD(20)
                    ^,DR(20),DS(20),DEQR(20),DEQS(20),BLOCK(20),BLOCKS(20)
                    ^,BET1MR(20),BET2MR(20),BET1MS(20),BET2MS(20),RADI1(20),RADI2(20)
                    ^,FAIRIN(20),FAIOUT(20),ETASG(20),PSID(20),TAUD(20),SITADR(20)
                    ^,SITADS(20),WWD(20),VVD(20)
 4.   000000B        N = ISTAGE
 5.   000001B        PAI = 3.1415926
 6.   000003B        B1 = 1.0
 7.   000004B        B2R = ( 90.0 - BETA1 + STAGER ( N )) * PAI / 180.0
 8.   000012B        B2 = COS ( B2R )
 9.   000014B        LWC=XW1/XG*RHOG1
10.   000016B        DS1=0.07*RC(N)
11.   000021B        BETA1R = BETA1* PAI / 180.0
12.   000024B        DS2 = 2.0 * PAI * R / RBLADE(N) * COS (BETA1R) /
                    $COS(B2R)
13.   000034B        IF(DS2.GE.RC(N)) DS2=RC(N)
14.   000037B        H=(AAA1*144.0)/(2.0*PAI*R)
15.   000041B        A1=DS1*H*RBLADE(N)/144.0
16.   000044B        A2=DS2*H*RBLADE(N)/144.0
17.   000046B        WW1 = LWC * W1 * B1 * A1
18.   000052B        WW2 = LWC * W1 * B2 * A2
19.   000055B        WW = WW1 + WW2
```

```
20.   000057B        RETURN
21.   000061B        END
            C ++++++++++++++++++++++++++++++++++++++++++++++++++++++++++++++++++++++++

 1.   000000B        SUBROUTINE WICIRL(ISTAGE,R,XW1,XG,RHOG1,BETA1,W1,
                    1WW1 , WW2 , WW )
 2.   000000B        REAL LWC
 3.   000000B        COMMON JPERFM,RHOG(3),RERUP,RERLOW,RESUP,RESLOW
                    ^,PREB,RRTIP(20),SRTIP(20),AAA1,AAA2,AAA3,SAREA(20),SAREAS(20)
                    ^,P(3),TG(3),XA,XV(3),XCH4,XW(3),XWW(3),XWT(3),TW(3),TWW(3)
                    ^,OMEGS(20),OMEGR(20),GAPR(20),GAPS(20)
                    ^,RRHUB(20) , RC(20) , RBLADE(20) , STAGER(20)
                    ^,SRHUB(20) , SC(20) , SBLADE(20),STAGES(20)
                    ^,SIGUMR(20) , BET1SR(20) , BET2SR(20) , AINCSR(20) , ADEVSR(20)
                    ^,SIGUMS(20) , BET1SS(20) , BET2SS(20) , AINCSS(20) , ADEVSS(20)
                    ^,UTIPG(20),UTIP(20),UTIPD(20),UOU(20),UMEAN(20),UHUB(20),U(20),FAI
                    ^,AREA(20),AREAS(20),UU2(20),UTIP2(20),UMEAN2(20),UHUB2(20),IPRINT
                    ^,ICENT,IICENT,FMR1(20),FMA2(20),IDESIN,FAID
                    ^,NS,NSF,NSLPC,BYPASS,NS1,RT(20),RM(20),RH(20),ST(20),SM(20),SH(20)
                    ^,DSMASS,AAREA(20),AAREAS(20),PR12D(20),PR13D(20),ETARD(20)
                    ^,DR(20),DS(20),DEQR(20),DEQS(20),BLOCK(20),BLOCKS(20)
                    ^,BET1MR(20),BET2MR(20),BET1MS(20),BET2MS(20),RADI1(20),RADI2(20)
                    ^,FAIRIN(20),FAIOUT(20),ETASG(20),PSID(20),TAUD(20),SITADR(20)
                    ^,SITADS(20),WWD(20),VVD(20)
 4.   000000B        N = ISTAGE
 5.   000001B        PAI = 3.1415926
 6.   000003B        LWC=XW1/XG/RHOG1
 7.   000006B        ALFA=(90.0-BETA1)/2.0*PAI/180.0
 8.   000012B        BETA=(90.0+BETA1)/2.0*PAI/180.0
 9.   000016B        B1=SIN(ALFA)
10.   000021B        B2=SIN(BETA)
11.   000023B        V1=W1*COS(ALFA)
12.   000025B        V2=W1*COS(BETA)
13.   000030B        S=2.0*PAI*RRTIP(ISTAGE)/RBLADE(ISTAGE)/2.0
14.   000035B        GSI=BETA1+(90.0-BETA1)/2.0
15.   000040B        GSIR=GSI*PAI/180.0
16.   000042B        STAGR=STAGER(ISTAGE)*PAI/180.0
17.   000045B        Y2=GAPR(ISTAGE)/2.0*(WICTAN(STAGR)-WICTAN(GSIR))+S
18.   000056B        DAMY1=(90.0-GSI)*PAI/180.0
19.   000062B        Y1=Y2*SIN(DAMY1)
20.   000064B        DAMY2=(GSI-STAGER(ISTAGE))*PAI/180.0
21.   000071B        DS1=Y1/SIN(DAMY2)
22.   000073B        IF(DS1.GT.RC(ISTAGE)) DS1=RC(ISTAGE)
23.   000077B        DAMY3=(90.-(90.0+BETA1)/2.0)*PAI/180.0
24.   000103B        DAMY4=STAGER(ISTAGE)*PAI/180.0
25.   000106B        DAMY5=BETA1*PAI/180.0
26.   000110B        DAMY6=S-GAPR(ISTAGE)/2.0*(WICTAN(DAMY5)-WICTAN(DAMY3))
27.   000120B        DAMY7=COS(DAMY4)*WICTAN(DAMY3)+SIN(DAMY4)
28.   000131B        DS2=DAMY6/DAMY7
29.   000132B        IF(DS2.GT.RC(ISTAGE)) DS2=RC(ISTAGE)
30.   000136B        H=(AAA1*144.0)/(2.0*PAI*R)
31.   000142B        A1=DS1*H*RBLADE(N)/144.0
32.   000146B        A2=DS2*H*RBLADE(N)/144.0
33.   000150B        WW1 = LWC * V1 * B1 * A1
34.   000154B        WW2 = LWC * V2 * B2 * A2
35.   000160B        WW = WW1 + WW2
36.   000162B        RETURN
37.   000164B        END
            C ++++++++++++++++++++++++++++++++++++++++++++++++++++++++++++++++++++++++
```

```
 1.   000000B        SUBROUTINE WICISS( ISTAGE ,R ,XW1, XG , RHOGAS ,ALFA2,V1 ,
                    $WW1,WW2,WW)
 2.   000000B        REAL LWC
 3.   000000B        COMMON JPERFM,RHOG(3),RERUP,RERLOW,RESUP,RESLOW
                    ^,PREB,RRTIP(20),SRTIP(20),AAA1,AAA2,AAA3,SAREA(20),SAREAS(20)
                    ^,P(3),TG(3),XA,XV(3),XCH4,XW(3),XWW(3),XWT(3),TW(3),TWW(3)
                    ^,OMEGS(20),OMEGR(20),GAPR(20),GAPS(20)
                    ^,RRHUB(20) , RC(20) , RBLADE(20) , STAGER(20)
                    ^,SRHUB(20) , SC(20) , SBLADE(20),STAGES(20)
                    ^,SIGUMR(20) , BET1SR(20) , BET2SR(20) , AINCSR(20) , ADEVSR(20)
                    ^,SIGUMS(20) , BET1SS(20) , BET2SS(20) , AINCSS(20) , ADEVSS(20)
                    ^,UTIPG(20),UTIP(20),UTIPD(20),UOU(20),UMEAN(20),UHUB(20),U(20),FAI
                    ^,AREA(20),AREAS(20),UU2(20),UTIP2(20),UMEAN2(20),UHUB2(20),IPRINT
                    ^,ICENT,IICENT,FMR1(20),FMA2(20),IDESIN,FAID
                    ^,NS,NSF,NSLPC,BYPASS,NS1,RT(20),RM(20),RH(20),ST(20),SM(20),SH(20)
                    ^,DSMASS,AAREA(20),AAREAS(20),PR12D(20),PR13D(20),ETARD(20)
                    ^,DR(20),DS(20),DEQR(20),DEQS(20),BLOCK(20),BLOCKS(20)
                    ^,BET1MR(20),BET2MR(20),BET1MS(20),BET2MS(20),RADI1(20),RADI2(20)
                    ^,FAIRIN(20),FAIOUT(20),ETASG(20),PSID(20),TAUD(20),SITADR(20)
                    ^,SITADS(20),WWD(20),VVD(20)
 4.   000000B        LWC = XW1/ XG * RHOGAS
 5.   000003B        DS1=( 0.06 * SC ( ISTAGE ) ) / 12.0
 6.   000006B        PAI=3.1415926
 7.   000007B        B1=1.0
 8.   000010B        B2R=(90.0-ALFA2+STAGES(ISTAGE))*PAI/180.0
 9.   000015B        B2=COS(B2R)
10.   000020B        ALFA2R=ALFA2*PAI/180.0
11.   000022B        DS2=2.0*PAI*R/SBLADE(ISTAGE)*COS(ALFA2R)/COS(B2R)
12.   000033B        IF(DS2.GT.SC(ISTAGE)) DS2=SC(ISTAGE)
13.   000036B        H=(AAA2*144.0)/(2.0*PAI*R)
14.   000040B        A1=DS1*H*SBLADE(ISTAGE)/144.0
15.   000043B        A2=DS2*H*SBLADE(ISTAGE)/144.0
16.   000045B        WW1=LWC*V1*B1*A1
17.   000051B        WW2=LWC*V1*B2*A2
18.   000054B        WW=WW1+WW2
19.   000056B        RETURN
20.   000060B        END
            C ++++++++++++++++++++++++++++++++++++++++++++++++++++++++++++++++++++++++

 1.   000000B        SUBROUTINE WICISL(ISTAGE,R,XW1,XG,RHOG1,ALFA2,W1,WW1,WW2,WW)
 2.   000000B        REAL LWC
 3.   000000B        COMMON JPERFM,RHOG(3),RERUP,RERLOW,RESUP,RESLOW
                    ^,PREB,RRTIP(20),SRTIP(20),AAA1,AAA2,AAA3,SAREA(20),SAREAS(20)
                    ^,P(3),TG(3),XA,XV(3),XCH4,XW(3),XWW(3),XWT(3),TW(3),TWW(3)
                    ^,OMEGS(20),OMEGR(20),GAPR(20),GAPS(20)
                    ^,RRHUB(20) , RC(20) , RBLADE(20) , STAGER(20)
                    ^,SRHUB(20) , SC(20) , SBLADE(20),STAGES(20)
                    ^,SIGUMR(20) , BET1SR(20) , BET2SR(20) , AINCSR(20) , ADEVSR(20)
                    ^,SIGUMS(20) , BET1SS(20) , BET2SS(20) , AINCSS(20) , ADEVSS(20)
                    ^,UTIPG(20),UTIP(20),UTIPD(20),UOU(20),UMEAN(20),UHUB(20),U(20),FAI
                    ^,AREA(20),AREAS(20),UU2(20),UTIP2(20),UMEAN2(20),UHUB2(20),IPRINT
                    ^,ICENT,IICENT,FMR1(20),FMA2(20),IDESIN,FAID
                    ^,NS,NSF,NSLPC,BYPASS,NS1,RT(20),RM(20),RH(20),ST(20),SM(20),SH(20)
                    ^,DSMASS,AAREA(20),AAREAS(20),PR12D(20),PR13D(20),ETARD(20)
                    ^,DR(20),DS(20),DEQR(20),DEQS(20),BLOCK(20),BLOCKS(20)
                    ^,BET1MR(20),BET2MR(20),BET1MS(20),BET2MS(20),RADI1(20),RADI2(20)
                    ^,FAIRIN(20),FAIOUT(20),ETASG(20),PSID(20),TAUD(20),SITADR(20)
                    ^,SITADS(20),WWD(20),VVD(20)
 4.   000000B        PAI=3.1415926
 5.   000001B        LWC = XW1/ XG * RHOG1
```

```
000004B      ALFA=(90.0-ALFA2)/2.0*PAI/180.0
000011B      BETA=(90.0+ALFA2)/2.0*PAI/180.0
000015B      B1=SIN(ALFA)
000020B      B2=SIN(BETA)
000022B      V1=W1*COS(ALFA)
000024B      V2=W1*COS(BETA)
000027B      S=2.0*PAI*SRTIP(ISTAGE)/SBLADE(ISTAGE)/2.0
000034B      GSI=ALFA2+(90.0-ALFA2)/2.0
000037B      GSIR=GSI*PAI/180.0
000041B      STAGR=STAGES(ISTAGE)*PAI/180.0
000044B      Y2=GAPS(ISTAGE)/2.0*(WICTAN(STAGR)-WICTAN(GSIR))+S
000055B      DAMY1=(90.0-GSI)*PAI/180.0
000061B      Y1=Y2*SIN(DAMY1)
000063B      DAMY2=(GSI-STAGES(ISTAGE))*PAI/180.0
000070B      DS1=Y1/SIN(DAMY2)
000072B      IF(DS1.GT.SC(ISTAGE)) DS1=SC(ISTAGE)
000076B      DAMY3=(90.-(90.0+ALFA2)/2.0)*PAI/180.0
000102B      DAMY4=STAGES(ISTAGE)*PAI/180.0
000105B      DAMY5=ALFA2*PAI/180.0
000107B      DAMY6=S-GAPS(ISTAGE)/2.0*(WICTAN(DAMY5)-WICTAN(DAMY3))
000117B      DAMY7=COS(DAMY4)*WICTAN(DAMY3)+SIN(DAMY4)
000130B      DS2=DAMY6/DAMY7
000131B      IF(DS2.GT.SC(ISTAGE)) DS2=SC(ISTAGE)
000135B      H=(AAA2*144.0)/(2.0*PAI*R)
000141B      A1=DS1*H*SBLADE(ISTAGE)/144.0
000144B      A2=DS2*H*SBLADE(ISTAGE)/144.0
000147B      WW1=LWC*V1*B1*A1
000152B      WW2=LWC*V2*B2*A2
000156B      WW=WW1+WW2
000160B      RETURN
000162B      END
           C ++++++++++++++++++++++++++++++++++++++++++++++++++++++++++++++++++++++          +

000000B      SUBROUTINE WICWAK ( RHOG , V , DWAKE , DWAKEM )
000000B      VISCOF=1.20E-3
000000B      SIGUMA = 4.6534E-3
000002B      GC = 32.174
000003B      WE=21.0
000005B      DWAKE1 = ( WE * SIGUMA * GC ) / RHOG / V ** 2
000012B      SN=VISCOF**2/(RHOG*SIGUMA*DWAKE1*GC)
000015B      WELIMT=12.0*(1.0+SN**0.36)
000022B      D1=WELIMT*SIGUMA*GC/(RHOG*V**2)
000027B      WE=22.0
000030B      DWAKE2=(WE*SIGUMA*GC)/RHOG/V**2
000034B      SN=VISCOF**2/(RHOG*SIGUMA*DWAKE2*GC)
000037B      WELIMT=12.0*(1.0+SN**0.36)
000044B      D2=WELIMT*SIGUMA*GC/(RHOG*V**2)
000051B      XXXX=WICNEW(DWAKE1,D1,DWAKE2,D2)
000054B      SN=VISCOF**2/(RHOG*SIGUMA*XXXX*GC)
000060B      WELIMT=12.0*(1.0+SN**0.36)
000065B      DWAKE=WELIMT*SIGUMA*GC/(RHOG*V**2)
000072B      DWAKEM = DWAKE / 3.2802 * 1.0E6
000074B      RETURN
000077B      END
           C ++++++++++++++++++++++++++++++++++++++++++++++++++++++++++++++++++++++

000000B      SUBROUTINE WICHET(TG1,TG3,TW1,TW3,DAVEN2,DAVEN,
            $DELZI,VZ,WMASS1,VMASS1,AMASS,CHMASS,CPG,CPW,DELTGH,DELTWH,RE)
000000B      DIMENSION DELHET(51)
000000B      REAL ND , KA , NV , MMASS,NU
```

```
 4.   000000B        DELTGH=0.0
 5.   000070B        DELTWH=0.0
 6.   000070B        IF(WMASS1.LT.1.0E-6) GO TO 11
 7.   000073B        PAI = 3.1415927
 8.   000074B        DAVEAV=(DAVEN2+DAVEN)/2.0*1.0E-6*3.2802
 9.   000100B        IF(DAVEAV.LT.1.0E-6) GO TO 11
10.   000103B        RHOW = 62.54
11.   000103B        ND = WMASS1    / ( RHOW * 4.0 / 3.0 * PAI * ( DAVEAV / 2.0 ) ** 3)
12.   000112B        KA = 0.015 / 3600.0
13.   000113B        PR=0.7
14.   000115B        NU=2.0+0.6*SQRT(RE)*PR**0.33
15.   000127B        HCONVE = KA / DAVEAV * NU
16.   000131B        J = 1
17.   000132B     10 DELT=((TG1-TW1)+(TG3-TW3))/2.0
18.   000140B        DELHH = HCONVE * 4.0 * PAI * ( DAVEAV / 2 0 ) **2*DELT *
                     $ND*DELZI/VZ
19.   000150B        GMASS1=VMASS1+AMASS+CHMASS
20.   000154B        DELTGH=DELHH/(GMASS1*CPG)
21.   000156B        DELTWH=DELHH/(WMASS1*CPW)
22.   000160B        TG3=TG3-DELTGH
23.   000162B        TW3=TW3+DELTWH
24.   000164B        DELHET(J)=DELHH
25.   000165B        J=J+1
26.   000167B        IF(J.EQ.2) GO TO 10
27.   000170B        EROR=ABS(DELHET(J-1)-DELHET(J-2))
28.   000173B        EPS=0.0001
29.   000174B        IF(J.GT.50) GO TO 11
30.   000176B        IF(EROR.GT.EPS) GO TO 10
31.   000176B     11 RETURN
32.   000203B        END
            C ++++++++++++++++++++++++++++++++++++++++++++++++++++++++++++++++++++

 1.   000000B        SUBROUTINE  WICMAS( HW1 , TW1 , TW2 , PP1 , PP2 , TG1 , TG2 , DZ ,
                    1 PWB1 , PWB2 , PW1 , PW2 , VZ , DDAVE1 , DDAVE2 , HW2 , VMASS1 ,
                    1 VMASS2 , WMASS1 , WMASS2 , DMDTAV , AMASS ,RE)
 2.   000000B        PWB1 = WICPWB(TW1)*144.0
 3.   000003B        PWB2 = WICPWB( TW2 )*144.0
 4.   000007B        PW1 = ( HW1 * PP1 ) / ( HW1 + 0.6219 )
 5.   000013B        DMDT1 = WICMTR( TG1 , TW1 , PP1 , DDAVE1 , VZ , DZ , WMASS1 ,
                    1PW1 ,RE)
 6.   000027B        PW2AS1 = PW1
 7.   000030B        DMDT2 = WICMTR( TG 2 , TW 2 , PP2 , DDAVE2 , VZ , DZ , WMASS1 ,
                    1PW2AS1 ,RE)
 8.   000043B        DMDTAV = ( DMDT1 + DMDT2 ) / 2.0
 9.   000045B        IF(DMDTAV.LT.0.0) DMDTAV=0.0
10.   000050B        WMASS2 = WMASS1 - DMDTAV
11.   000051B        IF(WMASS2.LT.0.0) WMASS2=0.0
12.   000054B        DMDTAV=WMASS1-WMASS2
13.   000055B        VMASS2=VMASS1+DMDTAV
14.   000056B        HW2=VMASS2/AMASS
15.   000057B        PW2CL1 = ( HW2 * PP2 ) / ( HW2 + 0.6219 )
16.   000063B        PW2AS2 = PW1 * 1.05
17.   000065B        DMDT2 = WICMTR( TG2 , TW2 , PP2 , DDAVE2 , VZ , DZ , WMASS2 ,
                    1PW2AS2 ,RE)
18.   000100B        DMDTAV = ( DMDT1 + DMDT2 ) / 2.0
19.   000102B        IF(DMDTAV.LT.0.0) DMDTAV=0.0
20.   000105B        WMASS2 = WMASS1 - DMDTAV
21.   000106B        IF(WMASS2.LT.0.0) WMASS2=0.0
22.   000111B        DMDTAV=WMASS1-WMASS2
23.   000112B        VMASS2=VMASS1+DMDTAV
```

```
24.   000113B        HW2 = VMASS2 / AMASS
25.   000114B        PW2CL2 = ( HW2 * PP2 ) / ( HW2 + 0.6219 )
26.   000120B        J=0
27.   000121B      2 PW2ASN = WICNEW ( PW2AS1 , PW2CL1 , PW2AS2 , PW2CL2 )
28.   000125B        PW2AS1 = PW2AS2
29.   000126B        PW2CL1 = PW2CL2
30.   000127B        PW2AS2 = PW2ASN
31.   000131B        DMDT2 = WICMTR( TG2 , TW2 , PP2 , DDAVE2 , VZ , DZ , WMASS2 , PW
                    12AS2 ,RE)
32.   000143B        DMDTAV = ( DMDT1 + DMDT2 ) / 2.0
33.   000145B        IF(DMDTAV.LT.0.0) DMDTAV=0.0
34.   000150B        WMASS2 = WMASS1 - DMDTAV
35.   000151B        IF(WMASS2.LT.0.0) WMASS2=0.0
36.   000154B        DMDTAV=WMASS1-WMASS2
37.   000155B        VMASS2=VMASS1+DMDTAV
38.   000156B        HW2 = VMASS2 / AMASS
39.   000157B        PW2CL2 = ( HW2 * PP2 ) / ( HW2 + 0.6219 )
40.   000163B        ERROR = ABS ( PW2AS2 - PW2CL2 )/(PW2AS2+1.0)
41.   000170B        J=J+1
42.   000172B        IF(J.GT.10) GO TO 3
43.   000173B        EPS = 0.01
44.   000174B        IF ( ERROR . GT . EPS ) GO TO 2
45.   000176B      3 PW2 = PW2AS2
46.   000177B        RETURN
47.   000202B        END
            C ++++++++++++++++++++++++++++++++++++++++++++++++++++++++++++++++++++++

 1.   000000B        FUNCTION WICMTR(TTG,TTW,PPP,DAVE,VZ,DZ,MMASS,PW,RE)
 2.   000000B        REAL KG , ND , MMASS
 3.   000000B        IF(DAVE.LT.1.0E-6) WICMTR=0.0
 4.   000006B        IF(DAVE.LT.1.0E-6) GO TO 10
 5.   000007B        DD=DAVE*1.0E-6*3.2802
 6.   000011B        T = ( TTG + TTW ) / 2.0
 7.   000013B        PAI = 3.1415926
 8.   000015B        RHOW = 62.2567
 9.   000016B        RR = DD / 2.0
10.   000020B        TT = T * 5.0 / 9.0
11.   000023B        PP = PPP * 47.880258
12.   000025B        DV=4.24028E-3*(TT**1.5)/PP
13.   000031B        SCT=0.60
14.   000033B        SH=2.0+0.60*SQRT(RE)*SCT**0.33
15.   000045B        KG = DV / DD * SH
16.   000047B        HV=1115.3279-0.6840909*(TTW-460.0)
17.   000053B        PWBB=PW+29.0/18.0*0.45/HV*PPP*(TTG-TTW)
18.   000060B        R = 85.78
19.   000061B        ND = MMASS / ( RHOW * 4.0 / 3.0 * PAI * RR ** 3 )
20.   000070B        WICMTR = KG * 4.0 * PAI * RR ** 2 * ( PWBB / TTW - PW / TTG ) / R
                    1 * ND * DZ / VZ
21.   000102B     10 RETURN
22.   000107B        END
            C ++++++++++++++++++++++++++++++++++++++++++++++++++++++++++++++++++++++

 1.   000000B        FUNCTION WICPWB(TWB)
 2.   000000B        TSTAG=TWB
 3.   000001B        TSTAGC=(TSTAG-492.0)/1.8
 4.   000004B        IF(TSTAGC.LT.100.0) GO TO 40
 5.   000006B        IF(TSTAGC.GE.100.0.AND.TSTAGC.LT.200.0) GO TO 41
 6.   000012B        A=5.45142
 7.   000012B        B=2010.8
 8.   000014B        GO TO 42
```

```
 9.   000015B      40 A=5.9778
10.   000016B         B=2224.4
11.   000020B         GO TO 42
12.   000021B      41 A=5.6485
13.   000022B         B=2101.1
14.   000024B      42 AA=A-B/(TSTAGC+273.0)
15.   000030B         PS=10.0**AA
16.   000033B         PS=PS/4.88247E-4
17.   000034B         WICPWB=PS/144.0
18.   000035B         RETURN
19.   000040B         END
              C ++++++++++++++++++++++++++++++++++++++++++++++++++++++++++++++++++++

 1.   000000B         FUNCTION WICNEW(X1,Y1,X2,Y2)
 2.   000000B         T=ABS((X2-X1)/X1)
 3.   000003B         IF(T.LT.1.0E-6) WICNEW=(Y1+Y2)/2.0
 4.   000011B         IF(T.LT.1.0E-6) GO TO 100
 5.   000013B         WICNEW=X2-((Y2-X2)/(((Y2-X2)-(Y1-X1))/(X2-X1)))
 6.   000023B     100 RETURN
 7.   000027B         END
              C ++++++++++++++++++++++++++++++++++++++++++++++++++++++++++++++++++++

 1.   000000B         FUNCTION WICBPT(TSTAG,PSTAG)
 2.   000000B         TSTAGC=(TSTAG-492.0)/1.8
 3.   000003B         IF(TSTAGC.LT.100.0) GO TO 20
 4.   000005B         IF(TSTAGC.GE.100.0.AND.TSTAGC.LT.200.0) GO TO 21
 5.   000011B         A=5.45142
 6.   000011B         B=2010.8
 7.   000013B         GO TO 22
 8.   000014B      20 A=5.9778
 9.   000015B         B=2224.4
10.   000017B         GO TO 22
11.   000020B      21 A=5.6485
12.   000021B         B=2101.1
13.   000023B      22 PS=PSTAG*4.88247E-4
14.   000025B         TBOILK=B/(A-ALOG10(PS))
15.   000031B         WICBPT=TBOILK*1.8
16.   000033B         RETURN
17.   000036B         END
              C ++++++++++++++++++++++++++++++++++++++++++++++++++++++++++++++++++++

 1.   000000B         FUNCTION WICSH(TSTAG,PSTAG)
 2.   000000B         TSTAGC=(TSTAG-492.0)/1.8
 3.   000003B         IF(TSTAGC.LT.100.0) GO TO 40
 4.   000005B         IF(TSTAGC.GE.100.0.AND.TSTAGC.LT.200.0) GO TO 41
 5.   000011B         A=5.45142
 6.   000011B         B=2010.8
 7.   000013B         GO TO 42
 8.   000014B      40 A=5.9778
 9.   000015B         B=2224.4
10.   000017B         GO TO 42
11.   000020B      41 A=5.6485
12.   000021B         B=2101.1
13.   000023B      42 AA=A-B/(TSTAGC+273.0)
14.   000027B         PS=10.0**AA
15.   000032B         PS=PS/4.88247E-4
16.   000033B         WICSH=0.6218847*PS/(PSTAG-PS)
17.   000036B         RETURN
18.   000041B         END
              C ++++++++++++++++++++++++++++++++++++++++++++++++++++++++++++++++++++
```

```
 1.   000000B        FUNCTION WICTAN(X)
 2.   000000B        A=COS(X)
 3.   000004B        B=SIN(X)
 4.   000007B        WICTAN=B/A
 5.   000010B        RETURN
 6.   000013B        END
            C ++++++++++++++++++++++++++++++++++++++++++++++++++++++++++++++++++++++

 1.   000000B        SUBROUTINE WICCEN(RZERO,UZERO,DD,VZ,DELZZ,ALFAAV,FN,IRS,RHOGAS,
                    1RHUB,R2,U2,ITIP,VZTIME,XG,XA,XVV,XCH4,RTIPIN,IPRINT)
            C IRS=1:STATOR
            C IRS=2:ROTOR
            C IRS=3:CENTRIFUGAL ACTION FOR VAPOR
 2.   000000B        REAL N
 3.   000000B        PAI=3.1415926
 4.   000001B        ALFAAR=ALFAAV*PAI/180.0
 5.   000004B        IF(DD.LT.1.0E-6) GO TO 12
 6.   000006B        D=DD*1.0E-6*3.2802
 7.   000010B        RHOA=RHOGAS
 8.   000012B        RHOD=62.37
 9.   000013B        XXAA=XA/XG
10.   000015B        XXVV=XVV/XG
11.   000017B        XXCC=XCH4/XG
12.   000020B        VISCO=(XXAA*0.05715+XXVV*0.03293+XXCC*0.035)/3600.0
13.   000027B        ENDTIM=DELZZ/VZ
14.   000030B        JJ=10
15.   000032B        DELTIM=ENDTIM/FLOAT(JJ)
16.   000033B        R1=RZERO
17.   000035B        U1=UZERO
18.   000036B        TIME=0.0
19.   000037B        JJJ=1
20.   000041B     11 RE=D*U1/VISCO
21.   000044B        B1=0.44
22.   000045B        N=0.0
23.   000046B        IF(RE.LT.1.9) B1=24.0
24.   000052B        IF(RE.LT.1.9) N=1.0
25.   000055B        IF(RE.GT.1.9.AND.RE.LT.500.0) B1=18.5
26.   000062B        IF(RE.GT.1.9.AND.RE.LT.500.0) N=0.6
27.   000067B        B=((VISCO**N)*B1*PAI*(RHOA**(1.0-N))*6.0)/(8.0*RHOD*PAI)
28.   000105B        C=B/(D**(1.0+N))
29.   000113B        IF(IRS.EQ.3) C=0
30.   000117B        VW1=R1/12.0*2.0*PAI*FN/60.0
31.   000122B        IF(R1.GT.RTIPIN) VW1=RTIPIN/12.0*2.0*PAI*FN/60.0
32.   000130B        VW2=VZ*WICTAN(ALFAAR)
33.   000132B        IF(ALFAAV.LT.1.0) VW=VW1
34.   000137B        IF(ALFAAV.GT.1.0) VW=VW1/2.0
35.   000142B        IF(IRS.EQ.3) RHOA=23.964
36.   000146B        IF(IRS.EQ.3) RHOD=16.043
37.   000151B        A=VW*VW*(1.0-RHOA/RHOD)
38.   000155B        IF(IRS.EQ.3) DELU=A/R1*12.0*DELTIM
39.   000163B        IF(IRS.NE.3) DELU=(A/R1*12.0-C*U1**(2.0-N))*DELTIM
40.   000176B        IF(IRS.NE.3.AND.DELU.LT.0.0) DELU=0.0
41.   000203B        U11=U1
42.   000203B        U2=U1+DELU
43.   000205B        DELU=U2-U11
44.   000207B        UAVE=U1+DELU/2.0
45.   000210B        DELR=UAVE*DELTIM*12.0
46.   000212B        R2=R1+DELR
47.   000214B        TIME=TIME+DELTIM
```

```
48.   000216B        IF(IPRINT.EQ.2)
                    $WRITE(6,101) R1,VW,A,U1,DELU,U2,UAVE,DELR,R2,TIME
49.   000236B    101 FORMAT(1H ,7(F11.4,2X),E10.4,2X,F10.4,2X,E10.4)
50.   000236B        U1=U2
51.   000236B        R1=R2
52.   000240B        JJJ=JJJ+1
53.   000241B        VZTIME=VZ*TIME*12.0
54.   000244B        IF(TIME.GT.ENDTIM) GO TO 12
55.   000247B        IF(JJJ.EQ.JJ) GO TO 12
56.   000250B        GO TO 11
57.   000250B     12 RETURN
58.   000254B        END
            C ++++++++++++++++++++++++++++++++++++++++++++++++++++++++++++++++++++++

 1.   000000B        SUBROUTINE WICDMV(IPRINT,IRAD,AMASV1,AMASVT,AMASV,R1,R2,
                    $STAREA,RSTAVE,DELMAS)
 2.   000000B        PAI=3.1415926
 3.   000000B        RST1=RSTAVE
 4.   000002B        A1=STAREA
 5.   000003B        A2=PAI*(R1**2-R2**2)/144.0
 6.   000010B        A2=A2*0.5
 7.   000011B        DMCENT=A2/A1*AMASV
 8.   000013B        IF(DMCENT.LT.0.0) DMCENT=0.0
 9.   000016B        IF(DMCENT.GT.AMASV) DMCENT=AMASV
10.   000021B        IF(DMCENT.LT.0.0) DMCENT=0.0
11.   000024B        IF(IRAD.EQ.1) DMIN=0.0
12.   000027B        IF(IRAD.EQ.1) DMOUT=DMCENT
13.   000031B        IF(IRAD.EQ.2) DMIN=DMCENT
14.   000034B        IF(IRAD.EQ.2) DMOUT=DMCENT
15.   000037B        IF(IRAD.EQ.3) DMIN=DMCENT
16.   000042B        IF(IRAD.EQ.3) DMOUT=0.0
17.   000045B        AMASV2=AMASV1+DMIN-DMOUT
18.   000047B        IF(AMASV2.LT.0.0) AMASV2=0.0
19.   000052B        IF(AMASV2.GT.AMASVT) AMASV2=AMASVT
20.   000055B        DELMAS=AMASV2-AMASV1
21.   000056B        IF(IPRINT.EQ.2) WRITE(6,200) AMASV1,AMASV2,DMIN,DMOUT,DMCENT,
                    $AMASVT,AMASV,DELMAS
22.   000074B    200 FORMAT(1H0,8(F10.5,3X))
23.   000074B        RETURN
24.   000076B        END
            C ++++++++++++++++++++++++++++++++++++++++++++++++++++++++++++++++++++

 1.   000000B        SUBROUTINE WICDMS(IPRINT,IRAD,AMASW1,AMASWT,AMASW,R1,R2,STAREA,
                    $RSTAVE,RTIP,DMIN,DMOUT,AMASW2,DELMAS)
            C        AMASW1:MASS FLOW RATE OF WATER IN A STREAM TUBE IN INTEREST
            C        AMASWT:TOTAL MASS FLOW RATE OF WATER WHICH ENTER THE COMPRESSOR
            C        AMASW:TOTAL MASS FLOW RATE OF WATER WHICH IS SUBJECT TO
            C              CENTRIFUGAL FORCE
            C        IRAD=1:TIP
            C        IRAD=2:MEAN
            C        IRAD=3:HUB
 2.   000000B        PAI=3.1415926
 3.   000000B        RST1=RSTAVE
 4.   000002B        A1=STAREA
 5.   000003B        A2=PAI*(R2**2-R1**2)/144.0
 6.   000010B        A2=A2*0.5
 7.   000011B        DMCENT=A2/A1*AMASW
 8.   000013B        IF(DMCENT.LT.0.0) DMCENT=0.0
 9.   000016B        IF(DMCENT.GT.AMASWT) DMCENT=AMASWT
10.   000021B        IF(R1.GT.RST1) GO TO 110
```

```
                C     R1.LT.RST1
11.   000023B         DMIN=DMCENT
12.   000023B         DMOUT=DMCENT
13.   000024B         GO TO 100
14.   000024B     110 CONTINUE
                C     R1.GT.RST1
15.   000026B         DMIN=0.0
16.   000026B         DMOUT=DMCENT
17.   000027B     100 IF(IRAD.EQ.1) DMOUT=0.0
18.   000034B         IF(IRAD.EQ.3) DMIN=0.0
19.   000037B         AMASW2=AMASW1+DMIN-DMOUT
20.   000041B         IF(AMASW2.LT.0.0) AMASW2=0.0
21.   000044B         DELMAS=AMASW2-AMASW1
22.   000045B         IF(IPRINT.EQ.2) WRITE(6,200) AMASW2,AMASW1,DMIN,DMOUT,DMCENT,
                     $AMASWT,AMASW,DELMAS
23.   000063B     200 FORMAT(1H0,8(F10.5,3X))
24.   000063B         RETURN
25.   000065B         END
                C ++++++++++++++++++++++++++++++++++++++++++++++++++++++++++++++++++++

 1.   000000B         SUBROUTINE WICDML(IPRINT,IRAD,AMASW1,AMASWT,AMASW,R1,R2,STAREA,
                     $RSTAVE,RTIP,DMIN,DMOUT,AMASW2,DELMAS)
                C     AMASW1:MASS FLOW RATE OF WATER IN A STREAM TUBE IN INTEREST
                C     AMASWT:TOTAL MASS FLOW RATE OF WATER WHICH ENTER THE COMPRESSOR
                C     AMASW:TOTAL MASS FLOW RATE OF WATER WHICH IS SUBJECT TO
                C           CENTRIFUGAL FORCE
                C     IRAD=1:TIP
                C     IRAD=2:MEAN
                C     IRAD=3:HUB
 2.   000000B         PAI=3.1415926
 3.   000000B         RST1=RSTAVE
 4.   000002B         A1=STAREA
 5.   000003B         A2=PAI*(R2**2-R1**2)/144.0
 6.   000010B         A2=A2*0.5
 7.   000011B         DMCENT=A2/A1*AMASW
 8.   000013B         IF(DMCENT.LT.0.0) DMCENT=0.0
 9.   000016B         IF(DMCENT.GT.AMASWT) DMCENT=AMASWT
10.   000021B         IF(R1.GT.RST1) GO TO 110
11.   000023B         DMIN=DMCENT
12.   000023B         DMOUT=DMCENT
13.   000024B         GO TO 100
14.   000024B     110 CONTINUE
15.   000026B         DMIN=0.0
16.   000026B         DMOUT=DMCENT
17.   000027B     100 IF(IRAD.EQ.1) DMOUT=0.0
18.   000034B         IF(IRAD.EQ.3) DMIN=0.0
19.   000037B         AMASW2=AMASW1+DMIN-DMOUT
20.   000041B         IF(AMASW2.LT.0.0) AMASW2=0.0
21.   000044B         DELMAS=AMASW2-AMASW1
22.   000045B         IF(IPRINT.EQ.2) WRITE(6,200) AMASW2,AMASW1,DMIN,DMOUT,DMCENT,
                     $AMASWT,AMASW,DELMAS
23.   000063B     200 FORMAT(1H0,8(F10.5,3X))
24.   000063B         RETURN
25.   000065B         END
                C ++++++++++++++++++++++++++++++++++++++++++++++++++++++++++++++++++++

 1.   000000B         SUBROUTINE WICDRG(D,DELV1,RHGAS1,RHGAS2,CD2,DELV2,DRAG1,RE)
 2.   000000B         REAL N,N1
 3.   000000B         GC=32.174
 4.   000002B         IP=1
```

```
 5.   000004B        VISCOG=12.0E-6
 6.   000005B        PAI=3.1415927
 7.   000006B        IF(D.GT.0.0) GO TO 300
 8.   000011B        CD2=0.0
 9.   000011B        DELV2=0.0
10.   000012B        DRAG1=0.0
11.   000013B        RE=0.0
12.   000013B        GO TO 301
13.   000014B    300 RE1=(RHGAS1*D*DELV1)/VISCOG
14.   000017B        RE=RE1
15.   000020B        B11=0.44
16.   000021B        N1=0.0
17.   000022B        IF(RE.LT.1.9) B11=24.0
18.   000027B        IF(RE.LT.1.9) N1=1.0
19.   000032B        IF(RE.GT.1.9.AND.RE.LT.500.0) B11=18.5
20.   000037B        IF(RE.GT.1.9.AND.RE.LT.500.0) N1=0.6
21.   000044B        CD1=B11/(RE1**N1)
22.   000046B        DRAG1=0.5*RHGAS1*(DELV1**2)*(PAI*D**2)*CD1
                    $/GC
23.   000056B        DAMY=DRAG1*GC/(CD1*0.5*RHGAS2*(PAI*D**2))
24.   000065B        IF(IP.EQ.2) WRITE(6,200) D,DELV1,RHGAS1,RHGAS2,RE1,B11,N1,
                    $CD1,DRAG1,DAMY
25.   000105B    200 FORMAT(1H0,10(F10.5,2X))
26.   000105B        DELV2=SQRT(DAMY)
27.   000107B        RE2=RHGAS2*D*DELV2/VISCOG
28.   000111B        B1=0.44
29.   000113B        N=0.0
30.   000114B        IF(RE2.LT.1.9) B1=24.0
31.   000120B        IF(RE2.LT.1.9) N=1.0
32.   000123B        IF(RE2.GT.1.9.AND.RE2.LT.500.0) B1=18.5
33.   000130B        IF(RE2.GT.1.9.AND.RE2.LT.500.0) N=0.6
34.   000135B        CD2=B1/(RE2**N)
35.   000137B        IF(IP.EQ.2) WRITE(6,101) RE1,B11,N1,CD1,DELV1,RE2,B1,N,CD2,
                    $DELV2
36.   000160B    101 FORMAT(1H0,2X,10(F10.5,2X))
37.   000160B        RE=(RE1+RE2)/2.0
38.   000162B    301 RETURN
39.   000165B        END
            C  ++++++++++++++++++++++++++++++++++++++++++++++++++++++++++++++++++++

 1.   000000B        SUBROUTINE WICSIZ(WMASSL,WMASSS,AMING1,AMING2,AMING3,DL,DS,D1,D2,
                    $D3,DLIMIT,AMSLL,AMLGE,DSLL,DLGE)
 2.   000000B        TMASS1=WMASSL+WMASSS+AMING1+AMING2+AMING3
 3.   000004B        AML=0.0
 4.   000005B        AMS=0.0
 5.   000005B        IF(DL.GT.DLIMIT) AML=AML+WMASSL
 6.   000013B        IF(DL.LT.DLIMIT) AMS=AMS+WMASSL
 7.   000017B        IF(DS.GT.DLIMIT) AML=AML+WMASSS
 8.   000023B        IF(DS.LT.DLIMIT) AMS=AMS+WMASSS
 9.   000027B        IF(D1.GT.DLIMIT) AML=AML+AMING1
10.   000033B        IF(D1.LT.DLIMIT) AMS=AMS+AMING1
11.   000036B        IF(D2.GT.DLIMIT) AML=AML+AMING2
12.   000041B        IF(D2.LT.DLIMIT) AMS=AMS+AMING2
13.   000044B        IF(D3.GT.DLIMIT) AML=AML+AMING3
14.   000050B        IF(D3.LT.DLIMIT) AMS=AMS+AMING3
15.   000054B        TMASS2=AML+AMS
16.   000055B        ERROR=ABS(TMASS1-TMASS2)
17.   000057B        IF(ERROR.LT.1.0E-6) GO TO 100
18.   000062B        IF(TMASS2.LT.1.0E-6) GO TO 100
19.   000064B        TT=TMASS1/TMASS2
```

```
20.   000065B        IF(TT.LT.1.0) AML=AML/TT
21.   000071B        IF(TT.LT.1.0) AMS=AMS/TT
22.   000074B        IF(TT.GT.1.0) AML=AML*TT
23.   000077B        IF(TT.GT.1.0) AMS=AMS*TT
24.   000102B    100 AMLGE=AML
25.   000102B        AMSLL=AMS
26.   000104B        ADL=0.0
27.   000105B        ADS=0.0
28.   000105B        IF(DL.GT.DLIMIT.AND.AML.GT.0.0) ADL=ADL+DL*(WMASSL/AML)
29.   000114B        IF(DL.LT.DLIMIT.AND.AMS.GT.0.0) ADS=ADS+DL*(WMASSL/AMS)
30.   000122B        IF(DS.GT.DLIMIT.AND.AML.GT.0.0) ADL=ADL+DS*(WMASSS/AML)
31.   000131B        IF(DS.LT.DLIMIT.AND.AMS.GT.0.0) ADS=ADS+DS*(WMASSS/AMS)
32.   000140B        IF(D1.GT.DLIMIT.AND.AML.GT.0.0) ADL=ADL+D1*(AMING1/AML)
33.   000147B        IF(D1.LT.DLIMIT.AND.AMS.GT.0.0) ADS=ADS+D1*(AMING1/AMS)
34.   000156B        IF(D2.GT.DLIMIT.AND.AML.GT.0.0) ADL=ADL+D2*(AMING2/AML)
35.   000165B        IF(D2.LT.DLIMIT.AND.AMS.GT.0.0) ADS=ADS+D2*(AMING2/AMS)
36.   000174B        IF(D3.GT.DLIMIT.AND.AML.GT.0.0) ADL=ADL+D3*(AMING3/AML)
37.   000203B        IF(D3.LT.DLIMIT.AND.AMS.GT.0.0) ADS=ADS+D3*(AMING3/AMS)
38.   000212B        DLGE=ADL
39.   000212B        DSLL=ADS
40.   000214B        IF(DL.GT.0.0.AND.DLGE.GT.DL) DLGE=DL
41.   000221B        IF(DS.GT.0.0.AND.DSLL.GT.DS) DSLL=DS
42.   000225B        RETURN
43.   000227B        END
            C ++++++++++++++++++++++++++++++++++++++++++++++++++++++++++++++++++++++

 1.   000000B        SUBROUTINE WICPRP(XAIR,XH2O,XCH4,T,RMIX,CPMIX,GAMMA,G1,G2,G3)
            C T IN R
            C CPMIX IN BTU/LBM-R
            C RMIX IN LBF-FT/LBM-R
 2.   000000B        RAIR=1545.3/28.964
 3.   000000B        RH2O=1545.3/18.016
 4.   000002B        RCH4=1545.3/16.043
 5.   000003B        XXAIR=XAIR/(XAIR+XH2O+XCH4)
 6.   000007B        XXH2O=XH2O/(XAIR+XH2O+XCH4)
 7.   000011B        XXCH4=XCH4/(XAIR+XH2O+XCH4)
 8.   000012B        RMIX=XXAIR*RAIR+XXH2O*RH2O+XXCH4*RCH4
 9.   000020B        CPMIX=XXAIR*WICCPA(T)+XXH2O*WICCPH(T)+XXCH4*WICCPC(T)
10.   000036B        GAMMA=1.0/(1.0-RMIX/CPMIX/778.0)
11.   000042B        G1=GAMMA/(GAMMA-1.0)
12.   000043B        G2=(GAMMA-1.0)/2.0
13.   000046B        G3=-1.0/(GAMMA-1.0)
14.   000050B        RETURN
15.   000053B        END
            C++++++++++++++++++++++++++++++++++++++++++++++++++++++++++++++++++++++++

 1.   000000B        FUNCTION WICCPA(T)
            C T IN R
            C CPAIR IN BTU/LBM-R
 2.   000000B        TK=5.0/9.0*T
 3.   000002B        A=3.65359
 4.   000003B        B=-1.33736E-3
 5.   000005B        C=3.29421E-6
 6.   000006B        D=-1.91142E-9
 7.   000010B        E=0.275462E-12
 8.   000011B        R=8314.3/28.964
 9.   000013B        CP=(A+B*TK+C*TK**2+D*TK**3+E*TK**4)*R
10.   000023B        WICCPA=CP*2.3885E-4
11.   000025B        RETURN
12.   000030B        END
```

```
                C ++++++++++++++++++++++++++++++++++++++++++++++++++++++++++++++++++++++
 1.   000000B         FUNCTION WICCPH(T)
                C T IN R
                C CPH2O IN BTU/LBM-R
 2.   000000B         TK=5.0/9.0*T
 3.   000002B         A=4.07013
 4.   000003B         B=-1.10845E-3
 5.   000005B         C=4.15212E-6
 6.   000006B         D=-2.96374E-9
 7.   000010B         E=0.807021E-12
 8.   000011B         R=8314.3/18.016
 9.   000013B         CP=(A+B*TK+C*TK**2+D*TK**3+E*TK**4)*R
10.   000023B         WICCPH=CP*2.3885E-4
11.   000025B         RETURN
12.   000030B         END
                C ++++++++++++++++++++++++++++++++++++++++++++++++++++++++++++++++++++++

 1.   000000B         FUNCTION WICCPC(T)
                C T IN R
                C CPCH4 IN BTU/LBM-R
 2.   000000B         TK=5.0/9.0*T
 3.   000002B         A=3.82619
 4.   000003B         B=-3.97946E-3
 5.   000005B         C=24.5583E-6
 6.   000006B         D=-22.7329E-9
 7.   000010B         E=6.96270E-12
 8.   000011B         R=8314.3/16.043
 9.   000013B         CP=(A+B*TK+C*TK**2+D*TK**3+E*TK**4)*R
10.   000023B         WICCPC=CP*2.3885E-4
11.   000025B         RETURN
12.   000030B         END
                C ++++++++++++++++++++++++++++++++++++++++++++++++++++++++++++++++++++++

 1.   000000B         SUBROUTINE WICGSL(SIGUMA,BET1S,BET2S,AINCIS,ADEVIS,AMACH1,
                     1BET1,DEQS,DEQN,SITACS,SITACN,BET2N,OMEGAN,X,AK1,AK2,AK3
                     2,VZ1,VZ2,UR1,R1,R2)
 2.   000000B         AINCI=BET1-BET1S+AINCIS
 3.   000002B         BET2A=BET2S
 4.   000003B         X1=BET2A
 5.   000004B         DELDEQ=WICED(AK3,VZ1,VZ2,UR1,R1,R2,BET1,X1,SIGUMA,AINCIS,AINCI)
                     $-DEQS
 6.   000021B         ADEVI=ADEVIS+(6.40-9.45*AMACH1+9.45*X)*DELDEQ*AK1
 7.   000030B         IF(AMACH1.LT.X) ADEVI=ADEVIS+6.40*DELDEQ*AK1
 8.   000035B         BET2C=BET2S-ADEVIS+ADEVI
 9.   000037B         Y1=BET2C
10.   000040B         N=1
11.   000041B      12 IF(N.GT.1) GO TO 10
12.   000043B         BET2A=BET2S*1.1
13.   000045B      10 X2=BET2A
14.   000046B         DEQN=WICED(AK3,VZ1,VZ2,UR1,R1,R2,BET1,X2,SIGUMA,AINCIS,AINCI)
15.   000062B         DELDEQ=DEQN-DEQS
16.   000063B         ADEVI=ADEVIS+(6.40-9.45*AMACH1+9.45*X)*DELDEQ*AK1
17.   000072B         IF(AMACH1.LT.X) ADEVI=ADEVIS+6.40*DELDEQ*AK1
18.   000077B         BET2C=BET2S-ADEVIS+ADEVI
19.   000101B         Y2=BET2C
20.   000102B         DELBET=ABS((X2-Y2)/X2)
21.   000104B         EPS=1.0E-6
22.   000105B         IF(DELBET.LE.EPS) GO TO 11
23.   000107B         BET2A=WICNEW(X1,Y1,X2,Y2)
```

```
24.   000111B        X1=X2
25.   000112B        Y1=Y2
26.   000113B        N=N+1
27.   000115B        IF(N.GT.50) GO TO 13
28.   000117B        GO TO 12
29.   000120B     11 BET2N=X2
30.   000120B        GO TO 14
31.   000122B     13 WRITE(6,201)
32.   000125B    201 FORMAT(1H0,≠DO NOT CONVERGE≠)
33.   000125B        GO TO 15
34.   000125B     14 SITACN=WICMTK(SITACS,AMACH1,DELDEQ,AK2)
35.   000133B        OMEGAN=WICLOS(BET1,BET2N,SIGUMA,SITACN)
36.   000141B     15 RETURN
37.   000144B        END
            C++++++++++++++++++++++++++++++++++++++++++++++++++++++++++++++++++++++

 1.   000000B        SUBROUTINE WICSDL(CHORD,SIGUMA,BETA1,BETA2,UG,RHOG,
                    $AMASSW,AREA,VZ,OMEGAP)
 2.   000000B        PAI=3.1415926
 3.   000000B        RHOGO=RHOG
 4.   000002B        RHOPO=AMASSW/AREA/VZ
 5.   000005B        RR=RHOPO/RHOGO
 6.   000006B        VISCOG=0.128E-4
 7.   000007B        C=CHORD/12.0
 8.   000011B        RE=UG*C*RHOGO/VISCOG
 9.   000014B        DELC=0.37/(RE**0.2)/(1.0+1.442*RR)**0.8
10.   000027B        DELP=0.1402*DELC
11.   000031B        BETA1R=BETA1*PAI/180.0
12.   000034B        BETA2R=BETA2*PAI/180.0
13.   000036B        OMEGAP=DELP*2.0*SIGUMA/COS(BETA2R)*(COS(BETA1R)/COS(BETA2R))**2
14.   000045B        RETURN
15.   000050B        END
            C++++++++++++++++++++++++++++++++++++++++++++++++++++++++++++++++++++++

 1.   000000B        SUBROUTINE WICSTL(ISTAGE,IROTOR,DAV,W1,W2,DELV,V2,V3,WMASS,VZ,N
                    $,BETA1,BETA2,ALFA2,ALFA3,DELVU2,DELVL2,
                    $OMEGRU,OMEGRL,OMEGSU,OMEGSL,DRAGRU,DRAGRL,DRAGSU,DRAGSL,REAVE)
            C IROTOR=1 ROTOR
            C IROTOR=2 STATOR
 2.   000000B        REAL M,MMASS
 3.   000000B        COMMON JPERFM,RHOG(3),RERUP,RERLOW,RESUP,RESLOW
                    ^,PREB,RRTIP(20),SRTIP(20),AAA1,AAA2,AAA3,SAREA(20),SAREAS(20)
                    ^,P(3),TG(3),XA,XV(3),XCH4,XW(3),XWW(3),XWT(3),TW(3),TWW(3)
                    ^,OMEGS(20),OMEGR(20),GAPR(20),GAPS(20)
                    ^,RRHUB(20) , RC(20) , RBLADE(20) , STAGER(20)
                    ^,SRHUB(20) , SC(20) , SBLADE(20),STAGES(20)
                    ^,SIGUMR(20) , BET1SR(20) , BET2SR(20) , AINCSR(20) , ADEVSR(20)
                    ^,SIGUMS(20) , BET1SS(20) , BET2SS(20) , AINCSS(20) , ADEVSS(20)
                    ^,UTIPG(20),UTIP(20),UTIPD(20),UOU(20),UMEAN(20),UHUB(20),U(20),FAI
                    ^,AREA(20),AREAS(20),UU2(20),UTIP2(20),UMEAN2(20),UHUB2(20),IPRINT
                    ^,ICENT,IICENT,FMR1(20),FMA2(20),IDESIN,FAID
                    ^,NS,NSF,NSLPC,BYPASS,NS1,RT(20),RM(20),RH(20),ST(20),SM(20),SH(20)
                    ^,DSMASS,AAREA(20),AAREAS(20),PR12D(20),PR13D(20),ETARD(20)
                    ^,DR(20),DS(20),DEQR(20),DEQS(20),BLOCK(20),BLOCKS(20)
                    ^,BET1MR(20),BET2MR(20),BET1MS(20),BET2MS(20),RADI1(20),RADI2(20)
                    ^,FAIRIN(20),FAIOUT(20),ETASG(20),PSID(20),TAUD(20),SITADR(20)
                    ^,SITADS(20),WWD(20),VVD(20)
 4.   000000B        PAI=3.1415927
 5.   000002B        GC=32.174
 6.   000004B        RHOW=62.3
```

```
                C ++++++++++++++++++++++++++++++++++++++++++++++++++++++++++++++++++++++
000005B               IF(IROTOR.EQ.2) GO TO 100
                C DROPLET DRAG IN ROTOR
000010B               DD=DAV*1.0E-6*3.28
000012B               VG1=W1
000014B               VP1=VG1-DELV
000016B               A1=WMASS*RC(ISTAGE)/12.0/VZ
000022B               A2=RHOW*4.0/3.0*PAI*(DD/2.0)**3
000030B               TN=0.0
000031B               IF(WMASS.GT.0.0) GO TO 2000
000034B               GO TO 2001
000034B          2000 TN=A1/A2
000036B          2001 VAVE=(W1+W2)/2.0
000041B               GMU1=(90.0-BETA1)/2.0*PAI/180.0
000045B               DELVU1=VG1-VP1*COS(GMU1)
000052B               IF(N.GT.2) DELVU1=DELVU2
000056B               TNU=TN*(180.0-BETA1-BETA2)/360.0
000062B               XWW(2)=XWW(1)
000063B               XWT(2)=XWT(1)
000064B               XV(2)=XV(1)
000066B               CALL WICPRP(XA,XV(2),XCH4,TG(2),RMIX,CPMIX,GAMMA,G1,G2,G3)
000071B               IF(IPRINT.EQ.2) WRITE(6,4000)
000076B          4000 FORMAT(1H0,≠DROPLET DRAG IN ROTOR (UPPER PART)≠)
000076B               CALL WICDRG(DD,DELVU1,RHOG(1),RHOG(2),CD2,DELV2,DRAG1,RE)
000100B               DELVU2=DELV2
000100B               CDRU=CD2
000102B               RERUP=RE
000103B               DRAGRU=DRAG1*TNU
000105B               AREA1=PAI*(RRTIP(ISTAGE)**2-RRHUB(ISTAGE)**2)/144.0/10.0
000112B               DELPRU=DRAGRU/AREA1
000113B               OMEGRU=DELPRU/(0.5*RHOG(1)/GC*W1**2)
000120B               CDRUU=CDRU*DELVU2**2*PAI/4.0*DD**2*TNU/VAVE**2/RC(ISTAGE)*12.0
000131B               GML1=(90.0+BETA1)/2.0*PAI/180.0
000136B               DELVL1=VG1-VP1*COS(GML1)
000143B               IF(N.GT.2) DELVL1=DELVL2
000147B               TNL=TN*(180.0+BETA1+BETA2)/360.0
000153B               IF(IPRINT.EQ.2) WRITE(6,4001)
000160B          4001 FORMAT(1H0,≠DROPLET DRAG IN ROTOR (LOWER PART)≠)
000160B               CALL WICDRG(DD,DELVL1,RHOG(1),RHOG(2),CD2,DELV2,DRAG1,RE)
000162B               DELVL2=DELV2
000162B               CDRL=CD2
000164B               RERLOW=RE
000165B               DRAGRL=DRAG1*TNU
000167B               DELPRL=DRAGRL/AREA1
000171B               OMEGRL=DELPRL/(0.5*RHOG(1)/GC*W1**2)
000175B               CDRLL=CDRL*DELVL2**2*PAI/4.0*DD**2*TNL/VAVE**2/RC(ISTAGE)*12.0
000207B               IF(IPRINT.EQ.2) WRITE(6,2002)
000215B          2002 FORMAT(1H0,≠DROPLET DRAG SUMMARY≠)
000215B               IF(IPRINT.EQ.2) WRITE(6,720)DELVU1,DELVU2,DELVL1,DELVL2,CDRU,CD
                     $RUU,CDRL,CDRLL
                     $,DRAGRU,DRAGRL
000234B           720 FORMAT(1H0,10(F10.5,2X))
000234B               RUP1=(90.0-BETA1)/180.0
000236B               RLOW1=(90.0+BETA1)/180.0
000237B               RUP2=(90.0-BETA2)/180.0
000241B               RLOW2=(90.0+BETA2)/180.0
000242B               REAVE=RERUP*(RUP1+RUP2)*0.5+RERLOW*(RLOW1+RLOW2)*0.5
000252B               IF(IPRINT.EQ.2) WRITE(6,2010) RUP1,RUP2,RLOW1,RLOW2
000264B          2010 FORMAT(1H0,4(F10.5,2X))
000264B               GO TO 200
```

```
                C ++++++++++++++++++++++++++++++++++++++++++++++++++++++++++++++++++++
                C DROPLET DRAG IN STATOR
 63.   000264B    100 DD=DAV*1.0E-6*3.28
 64.   000267B        VG1=W1
 65.   000270B        VP1=VG1-DELV
 66.   000272B        A1=WMASS*SC(ISTAGE)/12.0/VZ
 67.   000276B        A2=RHOW*4.0/3.0*PAI*(DD/2.0)**3
 68.   000304B        TN=0.0
 69.   000305B        IF(WMASS.GT.0.0) GO TO 5002
 70.   000310B        GO TO 5003
 71.   000310B   5002 TN=A1/A2
 72.   000312B   5003 VAVE=(V3+V2)/2.0
 73.   000315B        DELVU1=DELVU2
 74.   000316B        TNU=TN*(180.0-ALFA2-ALFA3)/360.0
 75.   000323B        IF(IPRINT.EQ.2) WRITE(6,2005)
 76.   000332B   2005 FORMAT(1H0,≠DROPLET DRAG IN STATOR (UPPER PART)≠)
 77.   000332B        CALL WICDRG(DD,DELVU1,RHOG(2),RHOG(2),CD2,DELV2,DRAG1,RE)
 78.   000334B        DELVU2=DELV2
 79.   000334B        CDSU=CD2
 80.   000336B        RESUP=RE
 81.   000337B        DRAGSU=DRAG1*TNU
 82.   000341B        AREA2=PAI*(SRTIP(ISTAGE)**2-SRHUB(ISTAGE)**2)/144.0/10.0
 83.   000346B        DELPSU=DRAGSU/AREA2
 84.   000347B        OMEGSU=DELPSU/(0.5*RHOG(2)/GC*V2**2)
 85.   000354B        CDSUU=CDSU*DELVU2**2*PAI/4.0*DD**2*TNU/VAVE**2/SC(ISTAGE)*12.0
 86.   000365B        DELVL1=DELVL2
 87.   000367B        TNL=TN*(180.0+ALFA2+ALFA3)/360.0
 88.   000374B        IF(IPRINT.EQ.2) WRITE(6,2006)
 89.   000402B   2006 FORMAT(1H0,≠DROPLET DRAG IN STATOR (LOWER PART)≠)
 90.   000402B        CALL WICDRG(DD,DELVL1,RHOG(2),RHOG(2),CD2,DELV2,DRAG1,RE)
 91.   000404B        DELVL2=DELV2
 92.   000404B        CDSL=CD2
 93.   000406B        RESLOW=RE
 94.   000407B        DRAGSL=DRAG1*TNL
 95.   000411B        DELPSL=DRAGSL/AREA2
 96.   000413B        OMEGSL=DELPSL/(0.5*RHOG(2)/GC*V2**2)
 97.   000417B        CDSLL=CDSL*DELVL2**2*PAI/4.0*DD**2*TNL/VAVE**2/SC(ISTAGE)*12.0
 98.   000431B        IF(IPRINT.EQ.2) WRITE(6,2007)
 99.   000437B   2007 FORMAT(1H0,≠DROPLET DRAG IN STATOR (SUMMARY)≠)
100.   000437B        IF(IPRINT.EQ.2)WRITE(6,721) DELVU1,DELVU2,DELVL1,DELVL2,CDSU,CD
                    $SUU,CDSL,CDSLL
                    ^,DRAGSU,DRAGSL
101.   000456B    721 FORMAT(1H0,10(F10.5,2X))
102.   000456B        SUP1=(90.0-ALFA2)/180.0
103.   000460B        SLOW1=(90.0+ALFA2)/180.0
104.   000461B        SUP2=(90.0-ALFA3)/180.0
105.   000463B        SLOW2=(90.0+ALFA3)/180.0
106.   000464B        REAVE=RESUP*(SUP1+SUP2)*0.5+RESLOW*(SLOW1+SLOW2)*0.5
107.   000474B        IF(IPRINT.EQ.2) WRITE(6,2011) SUP1,SUP2,SLOW1,SLOW2
108.   000506B   2011 FORMAT(1H0,4(F10.5,2X))
109.   000506B    200 RETURN
110.   000510B        END
                C ++++++++++++++++++++++++++++++++++++++++++++++++++++++++++++++++++++

  1.   000000B        SUBROUTINE WICFML(WG1,WG2,FMASS,RHOG1,CHORD,SIGUMA,BETA1,BETA2,
                    $CDF,OMEGAF)
  2.   000000B        PAI=3.1415926
  3.   000000B        VISCOG=0.128E-4
  4.   000002B        VISCOL=6.500E-4
  5.   000003B        C=CHORD/12.0
```

```
 6.   000005B        WGAVE=0.5*(WG1+WG2)
 7.   000010B        VFILM=0.5*WGAVE*VISCOG/VISCOL
 8.   000013B        CDF=FMASS*VFILM/(0.5*RHOG1*WG1*WG1*C)
 9.   000021B        BETA1R=BETA1*PAI/180.0
10.   000024B        BETA2R=BETA2*PAI/180.0
11.   000026B        BETA3R=0.5*(BETA1R+BETA2R)
12.   000030B        CS1=COS(BETA1R)**2
13.   000032B        CS2=COS(BETA3R)**3
14.   000035B        OMEGAF=CDF*SIGUMA*CS1/CS2
15.   000041B        RETURN
16.   000043B        END
             C++++++++++++++++++++++++++++++++++++++++++++++++++++++++++++++++++++++++

 1.   000000B        SUBROUTINE WICRSL(SIGUMA,BETA1,BETA2,CHORD,DL,CDR,OMEGAR)
 2.   000000B        PAI=3.1415926
 3.   000000B        IF(DL.LT.1.0E-6) CDR=0.0
 4.   000005B        IF(DL.LT.1.0E-6) OMEGAR=0.0
 5.   000007B        IF(DL.LT.1.0E-6) GO TO 10
 6.   000010B        BETA1R=BETA1*PAI/180.0
 7.   000012B        BETA2R=BETA2*PAI/180.0
 8.   000013B        BETA3R=0.5*(BETA1R+BETA2R)
 9.   000015B        CS1=COS(BETA1R)**2
10.   000020B        CS2=COS(BETA3R)**3
11.   000023B        C=CHORD*2.54*0.01*1.0E6
12.   000027B        A=C/DL
13.   000031B        IF(A.LT.100.0) A=100.0
14.   000034B        CDR=1.89+1.62*ALOG10(A)
15.   000040B        CDR=1.0/CDR**2.5
16.   000044B        OMEGAR=CDR*SIGUMA*CS1/CS2
17.   000047B     10 RETURN
18.   000053B        END
             C++++++++++++++++++++++++++++++++++++++++++++++++++++++++++++++++++++++++
             C ++++++++++++++++++++++++++++++++++++++++++++++++++++++++++++++++++++++++

 1.   000000B        SUBROUTINE WICSPD(AMASS,ISTAGE)
 2.   000000B        REAL M,MIN,M1,M2,M1REL,M2REL
 3.   000000B        COMMON JPERFM,RHOG(3),RERUP,RERLOW,RESUP,RESLOW
                    ^,PREB,RRTIP(20),SRTIP(20),AAA1,AAA2,AAA3,SAREA(20),SAREAS(20)
                    ^,P(3),TG(3),XA,XV(3),XCH4,XW(3),XWW(3),XWT(3),TW(3),TWW(3)
                    ^,OMEGS(20),OMEGR(20),GAPR(20),GAPS(20)
                    ^,RRHUB(20) , RC(20) , RBLADE(20) , STAGER(20)
                    ^,SRHUB(20) , SC(20) , SBLADE(20),STAGES(20)
                    ^,SIGUMR(20) , BET1SR(20) , BET2SR(20) , AINCSR(20) , ADEVSR(20)
                    ^,SIGUMS(20) , BET1SS(20) , BET2SS(20) , AINCSS(20) , ADEVSS(20)
                    ^,UTIPG(20),UTIP(20),UTIPD(20),UOU(20),UMEAN(20),UHUB(20),U(20),FAI
                    ^,AREA(20),AREAS(20),UU2(20),UTIP2(20),UMEAN2(20),UHUB2(20),IPRINT
                    ^,ICENT,IICENT,FMR1(20),FMA2(20),IDESIN,FAID
                    ^,NS,NSF,NSLPC,BYPASS,NS1,RT(20),RM(20),RH(20),ST(20),SM(20),SH(20)
                    ^,DSMASS,AAREA(20),AAREAS(20),PR12D(20),PR13D(20),ETARD(20)
                    ^,DR(20),DS(20),DEQR(20),DEQS(20),BLOCK(20),BLOCKS(20)
                    ^,BET1MR(20),BET2MR(20),BET1MS(20),BET2MS(20),RADI1(20),RADI2(20)
                    ^,FAIRIN(20),FAIOUT(20),ETASG(20),PSID(20),TAUD(20),SITADR(20)
                    ^,SITADS(20),WWD(20),VVD(20)
 4.   000000B        DIMENSION TD(20)
 5.   000000B        AJ=778.26
 6.   000032B        AMASSS=AMASS
 7.   000034B        PAI=3.1415926
 8.   000035B        GC=32.174
 9.   000037B        TREF=518.70
10.   000040B        PREF=14.7*144.0
```

```
11.   000042B        AAAR1T=PAI*(RRTIP(1)**2-RRHUB(1)**2)/144.0*BLOCK(1)
12.   000047B        CMASS=AMASS*SQRT(TG(1)/TREF)/(P(1)/PREF)*AAAR1T/SAREA(1)
            C IGV INLET
13.   000061B        ISTAGE=NS1
14.   000063B        CALL WICPRP(1.0,0.0,0.0,TG(1),RMIX,CPMIX,GAMMA,G1,G2,G3)
15.   000066B        CALL WICMAC(ISTAGE,AMASS,TG(1),P(1),M,VZ,C,0.0,0.0,RMIX,CPMIX,
                    $AREAS(NS1))
16.   000073B        VZIN=VZ
17.   000073B        AIN=C
18.   000075B        MIN=M
19.   000076B        TOIN=TG(1)
20.   000100B        POIN=P(1)
21.   000101B        PSIN=P(1)/(1.0+G2*M**2)**G1
22.   000110B        TSIN=TG(1)/(1.0+G2*M**2)
23.   000114B        RHOGIN=PSIN/RMIX/TSIN
24.   000117B        FAIIN=VZIN/UTIPG(1)
25.   000120B        FAID=FAIIN
26.   000121B        GAMAIN=GAMMA
27.   000122B        TOIN=TG(1)
28.   000123B        POIN=P(1)
            C IGV INLET PRINTOUT
29.   000124B        IF(IDESIN.EQ.2) GO TO 99
30.   000127B        WRITE(6,1000)
31.   000133B   1000 FORMAT(1H1,≠*************** DESIGN POINT INFORMATION ************
                    $***≠)
32.   000133B        WRITE(6,1010)
33.   000136B   1010 FORMAT(1H0,1X,≠***** COMPRESSOR INLET *****≠)
34.   000136B        WRITE(6,1020) TOIN,POIN,TSIN,PSIN,RHOGIN
35.   000146B   1020 FORMAT(1H0,1X,≠TOTAL TEMPERATURE AT COMPRESSOR INLET=≠,F10.5,/,
                    $2X,≠TOTAL PRESSURE AT COMPRESSOR INLET=≠,F10.2,/,
                    $2X,≠STATIC TEMPERATURE AT COMPRESSOR INLET=≠,F10.5,/,
                    $2X,≠STATIC PRESSURE AT COMPRESSOR INLET=≠,F10.2,/,
                    $2X,≠STATIC DENSITY AT COMPRESSOR INLET=≠,F10.5)
36.   000146B        WRITE(6,1030) AIN,VZIN,MIN,AREAS(NS1),FAIIN
37.   000157B   1030 FORMAT(1H0,1X,≠ACOUSTIC SPEED AT COMPRESSOR INLET=≠,F10.5,/,
                    $2X,≠AXIAL VELOCITY AT COMPRESSOR INLET=≠,F10.5,/,
                    $2X,≠MACH NUMBER AT COMPRESSOR INLET=≠,F10.5,/,
                    $2X,≠STREAMTUBE AREA AT COMPRESSOR INLET=≠,F10.5,/,
                    $2X,≠FLOW COEFFICIENT AT COMPRESSOR INLET=≠,F10.5)
38.   000157B     99 CONTINUE
            C ROTOR INLET
39.   000157B        I=NS1
40.   000157B        ISTAGE=1
41.   000161B        ALFA1=BET2SS(I)
42.   000162B        ADEVSS(I)=ALFA1-BET2MS(I)
43.   000164B        IF(ADEVSS(I).LT.1.0E-6) ADEVSS(I)=0.01
44.   000170B        NSF1=NSF+1
45.   000171B    100 IF(ISTAGE.EQ.NSF1) AMASS=AMASS/(1.0+BYPASS)
46.   000177B        CALL WICMAC(ISTAGE,AMASS,TG(1),P(1),M,VZ,C,0.0,ALFA1,
                    $RMIX,CPMIX,AREA(ISTAGE))
47.   000204B        CPMIX1=CPMIX
48.   000204B        GAMMA1=GAMMA
49.   000206B        VZ1=VZ
50.   000207B        A1=C
51.   000211B        M1=M
52.   000212B        PS1=P(1)/(1.0+G2*M1**2)**G1
53.   000221B        TS1=TG(1)/(1.0+G2*M1**2)
54.   000225B        RHOGS1=PS1/RMIX/TS1
55.   000230B        IF(ISTAGE.NE.NS1) FAIRIN(ISTAGE)=VZ1/UTIPG(ISTAGE)
56.   000235B        IF(ISTAGE.EQ.NS1) FAIRIN(ISTAGE)=VZ1/UTIPG(ISTAGE-1)
```

```
 57.   000242B          ALFA1R=ALFA1*PAI/180.0
 58.   000244B          V1=VZ1/COS(ALFA1R)
 59.   000246B          VS1=VZ1*WICTAN(ALFA1R)
 60.   000251B          IF(ISTAGE.NE.NS1) WS1=U(ISTAGE)-VS1
 61.   000257B          IF(ISTAGE.EQ.NS1) WS1=U(ISTAGE-1)-VS1
 62.   000262B          WV=WS1/VZ1
 63.   000263B          BETA1R=ATAN(WV)
 64.   000266B          BETA1=BETA1R*180.0/PAI
 65.   000270B          IF(ISTAGE.EQ.NS1) GO TO 102
 66.   000272B          BET1SR(ISTAGE)=BETA1
 67.   000273B          AINCSR(ISTAGE)=BETA1-BET1MR(ISTAGE)
 68.   000275B      102 W1=VZ1/COS(BETA1R)
 69.   000301B          M1REL=W1/A1
 70.   000303B          TREL1=(1.0+G2*M1REL**2)*TS1
 71.   000306B          PREL1=(1.0+G2*M1REL**2)**G1*PS1
                  C ROTOR OUTLET
 72.   000314B          P(2)=PR12D(ISTAGE)*P(1)
 73.   000317B          TR12=(PR12D(ISTAGE)**(1.0/G1)-1.0)/ETARD(ISTAGE)+1.0
 74.   000326B          TG(2)=TR12*TG(1)
 75.   000330B          CALL WICPRP(1.0,0.0,0.0,TG(2),RMIX,CPMIX,GAMMA,G1,G2,G3)
 76.   000333B          GAMMA2=GAMMA
 77.   000333B          CPMIX2=CPMIX
 78.   000335B          GAMMAV=(GAMMA1+GAMMA2)/2.0
 79.   000337B          CPMIXV=(CPMIX1+CPMIX2)/2.0
 80.   000342B          G1AV=GAMMAV/(GAMMAV-1.0)
 81.   000344B          G2AV=(GAMMAV-1.0)/2.0
 82.   000346B          DELT=TG(2)-TG(1)
 83.   000350B          VS2=(U(ISTAGE)*VS1+DELT*CPMIXV*GC*AJ)/UU2(ISTAGE)
 84.   000356B          JJ=1
 85.   000357B          VZ2AS=VZ1
 86.   000360B      200 VS2VZ2=VS2/VZ2AS
 87.   000363B          ALFA2R=ATAN(VS2VZ2)
 88.   000366B          V2=VZ2AS/COS(ALFA2R)
 89.   000370B          TS2=TG(2)-V2**2/(2.0*CPMIX2*GC*AJ)
 90.   000376B          A2=SQRT(GAMMA2*RMIX*TS2*GC)
 91.   000403B          M2=V2/A2
 92.   000404B          PS2=P(2)/(1.0+G2*M2**2)**G1
 93.   000412B          RHOGS2=PS2/RMIX/TS2
 94.   000415B          VZ2CL=AMASS/(RHOGS2*AREAS(ISTAGE))
 95.   000417B          IF(JJ.EQ.2) GO TO 201
 96.   000422B          IF(JJ.GT.2) GO TO 202
 97.   000424B          X1=VZ2AS
 98.   000425B          Y1=VZ2CL
 99.   000426B          VZ2AS=VZ2CL
100.   000427B          JJ=JJ+1
101.   000431B          GO TO 200
102.   000432B      201 X2=VZ2AS
103.   000432B          Y2=VZ2CL
104.   000434B          VZ2AS=WICNEW(X1,Y1,X2,Y2)
105.   000437B          JJ=JJ+1
106.   000440B          GO TO 200
107.   000441B      202 IF((ABS(VZ2AS-VZ2CL)/VZ2AS).LT.1.0E-6) GO TO 300
108.   000446B          X1=X2
109.   000446B          Y1=Y2
110.   000450B          X2=VZ2AS
111.   000451B          Y2=VZ2CL
112.   000453B          VZ2AS=WICNEW(X1,Y1,X2,Y2)
113.   000455B          JJ=JJ+1
114.   000456B          GO TO 200
115.   000457B      300 VZ2=VZ2CL
```

```
116.   000460B        WS2=UU2(ISTAGE)-VS2
117.   000463B        WS2VZ2=WS2/VZ2AS
118.   000464B        BETA2R=ATAN(WS2VZ2)
119.   000467B        BETA2=BETA2R*180.0/PAI
120.   000471B        BET2SR(ISTAGE)=BETA2
121.   000471B        ADEVSR(ISTAGE)=BETA2-BET2MR(ISTAGE)
122.   000474B        W2=VZ2AS/COS(BETA2R)
123.   000477B        M2REL=W2/A2
124.   000501B        TREL2=(1.0+G2*M2REL**2.0)*TS2
125.   000504B        PREL2=(1.0+M2REL**2.0)**G1*PS2
126.   000512B        FAIOUT(ISTAGE)=VZ2/UTIPG(ISTAGE)
127.   000515B        DR(ISTAGE)=1.0-W2/W1+ABS(WS1-WS2)/2.0/SIGUMR(ISTAGE)/W1
128.   000525B        DEQR(ISTAGE)=COS(BETA2R)/COS(BETA1R)*
                     $(VZ1/VZ2)*
                     $(1.12+0.61*COS(BETA1R)**2/SIGUMR(ISTAGE)*
                     $(WICTAN(BETA1R)-(RADI2(ISTAGE)/RADI1(ISTAGE))*
                     $(VZ2/VZ1)*WICTAN(BETA2R))-U(ISTAGE)/VZ1*
                     $(1.0-(RADI2(ISTAGE)/RADI1(ISTAGE))**2))
129.   000563B        PRRELI=(1.0+G2AV*U(ISTAGE)**2/(GAMMAV*RMIX*TREL1*GC)
                     $*((UU2(ISTAGE)/U(ISTAGE))**2-1.0))**G1AV
130.   000601B        PLOSSR=PR12D(ISTAGE)/(TG(2)/TG(1))**G1AV*PRRELI
131.   000610B        IF(PRRELI.LT.PLOSSR) PRRELI=1.0
132.   000613B        OMEGR(ISTAGE)=(PRRELI-PLOSSR)/(1.0-PS1/PREL1)
133.   000620B        SITADR(ISTAGE)=OMEGR(ISTAGE)*COS(BETA2R)**3.0
                     $/(2.0*SIGUMR(ISTAGE)*COS(BETA1R)**2.0)
134.   000632B        ALFA2=ALFA2R*180.0/PAI
135.   000635B        BET1SS(ISTAGE)=ALFA2
136.   000635B        AINCSS(ISTAGE)=ALFA2-BET1MS(ISTAGE)
                 C STATOR OUTLET
137.   000637B        ADEVSS(ISTAGE)=0.1
138.   000641B        PLOSSS=PR13D(ISTAGE)/PR12D(ISTAGE)
139.   000642B        PR13=(TG(2)/TG(1))**G1AV*PLOSSR*PLOSSS/PRRELI
140.   000652B        OMEGS(ISTAGE)=(1.0-PLOSSS)/(1.0-PS2/P(2))
141.   000660B        ETASG(ISTAGE)=(PR13**(1.0/G1AV)-1.0)/(TR12-1.0)
142.   000670B        P(3)=PR13*P(1)
143.   000673B        TG(3)=TG(2)
144.   000674B        TD(ISTAGE)=TG(1)
145.   000676B        PSID(ISTAGE)=GC*AJ*CPMIXV*ETASG(ISTAGE)*(TG(2)-TG(1))/
                     $(UTIPG(ISTAGE)**2)
146.   000705B        TAUD(ISTAGE)=PSID(ISTAGE)/ETASG(ISTAGE)
147.   000706B        ALFA3=BET2MS(ISTAGE)+ADEVSS(ISTAGE)
148.   000711B        ALFA3R=ALFA3*PAI/180.0
149.   000713B        CALL WICPRP(1.0,0.0,0.0,TG(3),RMIX,CPMIX,GAMA,G1,G2,G3)
150.   000715B        JJ=1
151.   000715B        VZ3AS=VZ2
152.   000716B    350 V3=VZ3AS/COS(ALFA3R)
153.   000722B        TS3=TG(3)-V3**2.0/(2.0*CPMIX*GC*AJ)
154.   000730B        A3=SQRT(GAMA*RMIX*TS3*GC)
155.   000735B        M3=V3/A3
156.   000736B        PS3=P(3)/((1.0+G2*M3**2.0)**G1)
157.   000747B        RHOGS3=PS3/RMIX/TS3
158.   000752B        IF(ISTAGE.EQ.NS)AREA(ISTAGE+1)=AREAS(ISTAGE)
159.   000756B        VZ3CL=AMASS/(RHOGS3*AREA(ISTAGE+1))
160.   000760B        IF(JJ.EQ.2)GO TO 351
161.   000762B        IF(JJ.GT.2)GO TO 352
162.   000764B        X1=VZ3AS
163.   000765B        Y1=VZ3CL
164.   000766B        VZ3AS=VZ3CL
165.   000767B        JJ=JJ+1
166.   000771B        GO TO 350
```

```
000772B     351 X2=VZ3AS
000772B         Y2=VZ3CL
000774B         VZ3AS=WICNEW(X1,Y1,X2,Y2)
000777B         JJ=JJ+1
001000B         GO TO 350
001001B     352 IF((ABS(VZ3AS-VZ3CL)/VZ3CL).LT.1.0E-6)GO TO 400
001006B         X1=X2
001006B         Y1=Y2
001010B         X2=VZ3AS
001011B         Y2=VZ3CL
001013B         VZ3AS=WICNEW(X1,Y1,X2,Y2)
001015B         JJ=JJ+1
001016B         GO TO 350
001017B     400 VZ3=VZ3CL
001020B         IF(ISTAGE.EQ.NS)RADI1(ISTAGE+1)=RADI2(ISTAGE)
001025B         DEQS(ISTAGE)=COS(ALFA3R)/COS(ALFA2R)*(VZ2/VZ3)*
               $(1.12+0.61*COS(ALFA2R)**2.0/SIGUMS(ISTAGE)*
               $(WICTAN(ALFA2R)-WICTAN(ALFA3R)*(RADI1(ISTAGE+1)/RADI2(ISTAGE))*
               $(VZ3/VZ2)))
001054B         SITADS(ISTAGE)=OMEGS(ISTAGE)*COS(ALFA3R)/(2.0*SIGUMS(ISTAGE))*
               $(COS(ALFA3R)/COS(ALFA2R))**2.0
001067B         VS3=VZ2*WICTAN(ALFA3R)
001072B         DS(ISTAGE)=1.0-V2/V3+ABS(VS2-VS3)/2.0/SIGUMS(ISTAGE)/V2
001102B         WWD(ISTAGE)=W1/W2
            C PRINTOUT OF STAGE PERFORMANCE
001105B         IF(IDESIN.EQ.2) GO TO 1231
001107B         WRITE(6,1000)
001113B         WRITE(6,1100) ISTAGE
001117B    1100 FORMAT(1H0,1X,≠***** STAGE=≠,I2,≠ ******≠)
001117B         WRITE(6,1101)
001122B    1101 FORMAT(1H0,16X,≠TOTAL≠,8X,≠TOTAL≠,7X,≠STATIC≠,7X,≠STATIC≠,7X,
               $≠STATIC≠,/,17X,≠TEMP≠,7X,≠PRESSURE≠,7X,≠TEMP≠,7X,≠PRESSURE≠,6X,
               $≠DENSITY≠)
001122B         WRITE(6,1110) TG(1),P(1),TS1,PS1,RHOGS1
001132B    1110 FORMAT(1H0,1X,≠ROTOR INLET≠,1X,5(F10.3,3X))
001132B         WRITE(6,1120) TG(2),P(2),TS2,PS2,RHOGS2
001142B    1120 FORMAT(1H ,1X,≠ROTOR OUTLET≠,5(F10.3,3X))
001142B         WRITE(6,1111)
001145B    1111 FORMAT(1H0,16X,≠AXIAL≠,6X,≠ABSOLUTE≠,5X,≠RELATIVE≠,5X,≠TAN COMP≠,
               $5X,≠TAN COMP≠,/,15X,≠VELOCITY≠,5X,≠VELOCITY≠,5X,≠VELOCITY≠,4X,
               $≠OF ABS VEL≠,3X,≠OF REL VEL≠)
001145B         WRITE(6,1130) VZ1,V1,W1,VS1,WS1
001155B    1130 FORMAT(1H0,1X,≠ROTOR INLET≠,1X,5(F10.5,3X))
001155B         WRITE(6,1140) VZ2,V2,W2,VS2,WS2
001165B    1140 FORMAT(1H ,1X,≠ROTOR OUTLET≠,5(F10.5,3X))
001165B         WRITE(6,1141)
001170B    1141 FORMAT(1H0,15X,≠ROTOR≠,7X,≠ABS MACH≠,5X,≠REL MACH≠,5X,≠REL TOTAL≠,
               $4X,≠REL TOTAL≠,/,16X,≠SPEED≠,8X,≠NUMBER≠,7X,≠NUMBER≠,7X,≠TEMP≠,8X,
               $≠PRESSURE≠)
001170B         WRITE(6,1150) U(ISTAGE),M1,M1REL,TREL1,PREL1
001201B    1150 FORMAT(1H0,1X,≠ROTOR INLET≠,1X,5(F10.3,3X))
001201B         WRITE(6,1160) UU2(ISTAGE),M2,M2REL,TREL2,PREL2
001212B    1160 FORMAT(1H ,1X,≠ROTOR OUTLET≠,5(F10.3,3X))
001212B         I=ISTAGE
001212B         IF(ISTAGE.EQ.1) I=NS1+1
001217B         WRITE(6,1161)
001222B    1161 FORMAT(1H0,14X,≠ABS FLOW≠,5X,≠REL FLOW≠,4X,≠STREAMTUBE≠,18X,
               $≠FLOW≠,/,16X,≠ANGLE≠,8X,≠ANGLE≠,8X,≠AREA≠,9X,≠RADIUS≠,5X,
               $≠COEFFICIENT≠)
001222B         WRITE(6,1170) BET2SS(I-1),BET1SR(ISTAGE),AREA(ISTAGE),
```

```
                    $RADI1(ISTAGE),FAIRIN(ISTAGE)
214.   001237B   1170 FORMAT(1H0,1X,≠ROTOR INLET≠,1X,5(F10.5,3X))
215.   001237B        WRITE(6,1180) BET1SS(ISTAGE),BET2SR(ISTAGE),AREAS(ISTAGE),
                    $RADI2(ISTAGE),FAIOUT(ISTAGE)
216.   001254B   1180 FORMAT(1H ,1X,≠ROTOR OUTLET≠,5(F10.5,3X))
217.   001254B        WRITE(6,1190) PR13,ETASG(ISTAGE),PR12D(ISTAGE),ETARD(ISTAGE),TR12
218.   001267B   1190 FORMAT(1H0,1X,≠STAGE TOTAL PRESSURE RATIO AT DESIGN POINT=≠,F10.5,
                    $/,2X,≠STAGE ADIABATIC EFFICIENCY AT DESIGN POINT=≠,F10.5,/,2X,
                    $≠ROTOR TOTAL PRESSURE RATIO AT DESIGN POINT=≠,F10.5,/,2X,
                    $≠ROTOR ADIABATIC EFFICIENCY AT DESIGN POINT=≠,F10.5,/,2X,
                    $≠ROTOR TOTAL TEMPERATURE RATIO AT DESIGN POINT=≠,F10.5)
219.   001267B   1231 CONTINUE
                C REPEAT
220.   001267B        TG(1)=TG(3)
221.   001267B        P(1)=P(3)
222.   001271B        ALFA1=BET2MS(ISTAGE)+ADEVSS(ISTAGE)
223.   001274B        ISTAGE=ISTAGE+1
224.   001275B        IF(ISTAGE.LE.NS)GO TO 100
                C OVERALL PERFORMANCE AT DESIGN POINT
225.   001277B        OVALPR=P(3)/POIN
226.   001300B        OVALTR=TG(3)/TOIN
227.   001302B        GAMMAV=(GAMAIN+GAMMA)/2.0
228.   001305B        G1AV=GAMMAV/(GAMMAV-1.0)
229.   001310B        OVALEF=(OVALPR**(1.0/G1AV)-1.0)/(OVALTR-1.0)
230.   001317B        OVALDT=TG(3)-TOIN
                C PRINTOUT OF OVERALL PERFORMANCE AT DESIGN POINT
231.   001322B        IF(IDESIN.EQ.2) GO TO 433
232.   001324B        WRITE(6,1000)
233.   001330B        WRITE(6,421)
234.   001333B    421 FORMAT(1H0,≠********** OVERALL PERFORMANCE AT DESIGN POINT ****
                    $*******≠)
235.   001333B        WRITE(6,425) TOIN
236.   001337B    425 FORMAT(1H0,1X,≠COMPRESSOR INLET TOTAL TEMPERATURE=≠,F8.2)
237.   001337B        WRITE(6,426) POIN
238.   001343B    426 FORMAT(1H0,1X,≠COMPRESSOR INLET TOTAL PRESSURE=≠,F10.2)
239.   001343B        WRITE(6,427) CMASS
240.   001347B    427 FORMAT(1H0,1X,≠CORRECTED MASS FLOW RATE=≠,F8.3)
241.   001347B        WRITE(6,429) OVALPR
242.   001353B    429 FORMAT(1H0,1X,≠OVERALL TOTAL PRESSURE RATIO=≠,F8.4)
243.   001353B        WRITE(6,430) OVALTR
244.   001357B    430 FORMAT(1H0,1X,≠OVERALL TOTAL TEMPERATURE RATIO=≠,F6.4)
245.   001357B        WRITE(6,431) OVALEF
246.   001363B    431 FORMAT(1H0,1X,≠OVERALL ADIABATIC EFFICIENCY=≠,F6.4)
247.   001363B        WRITE(6,432) OVALDT
248.   001367B    432 FORMAT(1H0,1X,≠OVERALL TEMPERATURE RISE=≠,F8.3)
249.   001367B        WRITE(6,1621)
250.   001372B   1621 FORMAT(1H0,14X,≠1≠,5X,≠2≠,5X,≠3≠,5X,≠4≠,5X,≠5≠,5X,≠6≠,5X,
                    $≠7≠,5X,≠8≠,5X,≠9≠,4X,≠10≠,4X,≠11≠,4X,≠12≠,4X,≠13≠,4X,≠14≠,
                    $4X,≠15≠,4X,≠16≠)
251.   001372B        WRITE(6,1710) (BET1SR(I),I=1,NS)
252.   001402B   1710 FORMAT(1H ,1X,≠BET1SR(I)≠,2X,17(F5.2,1X))
253.   001402B        WRITE(6,1720) (BET2SR(I),I=1,NS)
254.   001412B   1720 FORMAT(1H ,1X,≠BET2SR(I)≠,2X,17(F5.2,1X))
255.   001412B        WRITE(6,1730) (AINCSR(I),I=1,NS)
256.   001422B   1730 FORMAT(1H ,1X,≠AINCSR(I)≠,2X,17(F5.2,1X))
257.   001422B        WRITE(6,1740) (ADEVSR(I),I=1,NS)
258.   001432B   1740 FORMAT(1H ,1X,≠ADEVSR(I)≠,2X,17(F5.2,1X))
259.   001432B        WRITE(6,1760) (BET1SS(I),I=1,NS)
260.   001442B   1760 FORMAT(1H ,1X,≠BET1SS(I)≠,2X,17(F5.2,1X))
261.   001442B        WRITE(6,1770) (BET2SS(I),I=1,NS1)
```

```
262.   001452B   1770 FORMAT(1H ,1X,≠BET2SS(I)≠,2X,17(F5.2,1X))
263.   001452B        WRITE(6,1780) (AINCSS(I),I=1,NS)
264.   001462B   1780 FORMAT(1H ,1X,≠AINCSS(I)≠,2X,17(F6.2))
265.   001462B        WRITE(6,1790) (ADEVSS(I),I=1,NS)
266.   001472B   1790 FORMAT(1H ,1X,≠ADEVSS(I)≠,2X,17(F5.2,1X))
267.   001472B        WRITE(6,1791) (TD(I),I=1,NS)
268.   001502B   1791 FORMAT(1H ,1X,≠TD(I)≠,6X,17(F5.0,1X))
269.   001502B        WRITE(6,1793) (OMEGR(I),I=1,NS)
270.   001512B   1793 FORMAT(1H ,1X,≠OMEGR(I)≠,3X,17(F5.3,1X))
271.   001512B        WRITE(6,1794) (OMEGS(I),I=1,NS)
272.   001522B   1794 FORMAT(1H ,1X,≠OMEGS(I)≠,3X,17(F5.3,1X))
273.   001522B        WRITE(6,1795) (SITADR(I),I=1,NS)
274.   001532B   1795 FORMAT(1H ,1X,≠SITADR(I)≠,3X,17(F5.4,1X))
275.   001532B        WRITE(6,1796) (SITADS(I),I=1,NS)
276.   001542B   1796 FORMAT(1H ,1X,≠SITADS(I)≠,3X,17(F5.4,1X))
277.   001542B        WRITE(6,1797) (DEQR(I),I=1,NS)
278.   001552B   1797 FORMAT(1H ,1X,≠DEQR(I)≠,5X,17(F5.3,1X))
279.   001552B        WRITE(6,1798) (DEQS(I),I=1,NS)
280.   001562B   1798 FORMAT(1H ,1X,≠DEQS(I)≠,5X,17(F5.3,1X))
281.   001562B    433 CONTINUE
282.   001562B        AMASS=AMASSS
283.   001562B        RETURN
284.   001565B        END
```

# APPENDIX 5

# TEST CASE

Page Intentionally Left Blank

TEST CASE NO. 1

(Air Only)

********** INPUT DATA **********

NS(NUMBER OF STAGE)=16
PERFORMANCE AT MEAN

LARGE DROPLETS IN ROTOR FREE STREAM ARE NOT CENTRIFUGED

| | 1 | 2 | 3 | 4 | 5 | 6 | 7 | 8 | 9 | 10 | 11 | 12 | 13 | 14 | 15 | 16 | |
|---|---|---|---|---|---|---|---|---|---|---|---|---|---|---|---|---|---|
| RRHUB(I) | 6.300 | 6.830 | 7.020 | 7.025 | 7.017 | 7.037 | 7.025 | 7.025 | 7.025 | 7.308 | 7.553 | 7.757 | 7.956 | 8.123 | 8.258 | 8.351 | |
| RC(I) | 3.708 | 2.786 | 2.360 | 1.199 | 1.084 | 1.339 | 1.530 | 1.483 | 1.419 | 1.627 | 1.389 | 1.338 | 1.292 | 1.211 | 1.289 | 1.481 | |
| RBLADE(I) | 60.00 | 60.00 | 60.00 | 60.00 | 60.00 | 60.00 | 60.00 | 60.00 | 60.00 | 60.00 | 60.00 | 60.00 | 60.00 | 60.00 | 60.00 | 60.00 | |
| STAGER(I) | 46.64 | 48.99 | 46.90 | 37.82 | 33.35 | 34.67 | 33.87 | 28.74 | 25.60 | 43.72 | 40.81 | 41.12 | 42.09 | 43.47 | 49.63 | 50.91 | |
| STAGES(I) | 21.64 | 17.46 | 13.78 | 17.82 | 13.90 | 19.62 | 16.83 | 26.97 | 26.66 | 29.60 | 32.95 | 34.21 | 32.94 | 32.47 | 27.86 | 21.72 | |
| SRHUB(I) | 6.650 | 6.965 | 7.025 | 7.025 | 7.025 | 7.025 | 7.025 | 7.025 | 7.130 | 7.449 | 7.674 | 7.873 | 8.053 | 8.201 | 8.311 | 8.378 | 6.220 |
| SC(I) | 1.920 | 1.813 | 1.560 | 1.378 | .814 | 1.115 | .961 | .976 | 2.663 | 1.015 | .962 | .877 | .937 | .895 | .880 | 1.211 | |
| SBLADE(I) | 60.00 | 60.00 | 60.00 | 60.00 | 60.00 | 60.00 | 60.00 | 60.00 | 60.00 | 60.00 | 60.00 | 60.00 | 60.00 | 60.00 | 60.00 | 60.00 | |
| SIGUMR(I) | 1.357 | 1.357 | 1.401 | 1.078 | 1.128 | 1.179 | 1.398 | 1.387 | 1.457 | 1.162 | 1.120 | 1.098 | 1.152 | 1.129 | 1.087 | 1.009 | |
| SIGUMS(I) | 1.299 | 1.274 | 1.456 | 1.405 | 1.427 | 1.504 | 1.544 | 1.389 | 1.489 | 1.185 | 1.284 | 1.322 | 1.372 | 1.434 | 1.527 | 2.197 | |
| BET2SS(I) | 6.21 | -1.49 | .38 | 8.86 | 1.41 | 6.55 | 5.24 | 16.23 | 16.50 | 22.78 | 24.28 | 25.79 | 23.93 | 20.90 | 16.87 | 3.03 | 6.69 |
| GAPR(I) | .637 | .612 | .607 | .453 | .373 | .339 | .300 | .300 | .300 | .300 | .300 | .300 | .300 | .300 | .300 | .300 | |
| GAPS(I) | .900 | .760 | 2.395 | .641 | .390 | .300 | .300 | .300 | .300 | .300 | .300 | .300 | .300 | .300 | .300 | .300 | |
| RRTIP(I) | 18.29 | 17.09 | 16.32 | 11.11 | 10.70 | 10.44 | 10.23 | 9.94 | 9.69 | 9.56 | 9.55 | 9.55 | 9.55 | 9.55 | 9.55 | 9.55 | |
| SRTIP(I) | 17.53 | 16.70 | 16.32 | 10.88 | 10.56 | 10.33 | 10.06 | 9.80 | 9.65 | 9.55 | 9.55 | 9.55 | 9.55 | 9.55 | 9.55 | 9.55 | 18.33 |
| RT(I) | 18.29 | 17.09 | 16.32 | 11.11 | 10.70 | 10.70 | 10.44 | 10.23 | 9.94 | 9.69 | 9.56 | 9.55 | 9.55 | 9.55 | 9.55 | 9.55 | |
| RM(I) | 10.60 | 10.51 | 10.17 | 9.31 | 9.03 | 8.93 | 8.79 | 8.62 | 8.46 | 8.47 | 8.64 | 8.74 | 8.80 | 8.89 | 8.96 | 8.99 | |
| RH(I) | 6.30 | 6.83 | 7.02 | 7.03 | 7.02 | 7.04 | 7.03 | 7.03 | 7.03 | 7.31 | 7.55 | 7.76 | 7.96 | 8.12 | 8.26 | 8.35 | |
| ST(I) | 17.53 | 16.70 | 16.32 | 10.88 | 10.56 | 10.33 | 10.07 | 9.80 | 9.65 | 9.55 | 9.55 | 9.55 | 9.55 | 9.55 | 9.55 | 9.55 | |
| SM(I) | 10.51 | 10.39 | 9.58 | 9.15 | 8.94 | 8.85 | 8.67 | 8.49 | 8.48 | 8.54 | 8.68 | 8.76 | 8.84 | 8.92 | 8.97 | 9.00 | |
| SH(I) | 6.65 | 6.97 | 7.03 | 7.03 | 7.03 | 7.03 | 7.03 | 7.03 | 7.13 | 7.45 | 7.67 | 7.87 | 8.05 | 8.20 | 8.31 | 8.38 | |
| BLOCK(I) | 1.000 | 1.000 | 1.000 | 1.000 | 1.000 | 1.000 | 1.000 | 1.000 | 1.000 | 1.000 | 1.000 | 1.000 | 1.000 | 1.000 | 1.000 | 1.000 | |
| BLOCKS(I) | 1.000 | 1.000 | 1.000 | 1.000 | 1.000 | 1.000 | 1.000 | 1.000 | 1.000 | 1.000 | 1.000 | 1.000 | 1.000 | 1.000 | 1.000 | 1.000 | 1.000 |
| BET1MR(I) | 52.88 | 55.61 | 56.07 | 48.92 | 39.94 | 45.69 | 43.01 | 42.23 | 45.14 | 49.52 | 48.02 | 48.34 | 47.78 | 50.02 | 54.16 | 56.34 | |
| BET2MR(I) | 40.40 | 42.36 | 37.73 | 29.71 | 26.76 | 26.64 | 24.73 | 15.25 | 16.06 | 37.92 | 33.59 | 33.90 | 36.39 | 36.92 | 45.10 | 45.40 | |
| BET1MS(I) | 37.07 | 36.40 | 37.17 | 26.78 | 30.38 | 32.68 | 28.41 | 37.70 | 36.82 | 36.41 | 41.62 | 42.63 | 41.94 | 44.03 | 38.84 | 40.40 | 0 |
| BET2MS(I) | 6.21 | -1.49 | .38 | 8.86 | 1.41 | 6.55 | 5.24 | 16.23 | 16.50 | 22.78 | 24.28 | 25.79 | 23.93 | 20.90 | 16.87 | 3.03 | 6.69 |
| PR12D(I) | 1.343 | 1.300 | 1.305 | 1.227 | 1.201 | 1.174 | 1.163 | 1.209 | 1.141 | 1.199 | 1.207 | 1.191 | 1.157 | 1.180 | 1.134 | 1.166 | |
| PR13D(I) | 1.335 | 1.293 | 1.301 | 1.223 | 1.194 | 1.161 | 1.152 | 1.177 | 1.134 | 1.192 | 1.197 | 1.180 | 1.145 | 1.173 | 1.129 | 1.159 | |
| ETARD(I) | .933 | .933 | .991 | .885 | .939 | .879 | .950 | .867 | .950 | .910 | .934 | .924 | .937 | .928 | .929 | .934 | |

```
***************************** INPUT DATA *****************************

FNF(FRACTION OF DESIGN CORRECTED SPEED)=1.000

XDIN(INITIAL WATER CONTENT OF SMALL DROPLET)=     0
XDDIN(INITIAL WATER CONTENT OF LARGE DROPLET)=     0
RHUMID(INITIAL RELATIVE HUMIDITY)=    .00 PER CENT
XCH4(INITIAL METHANE CONTENT)=     0

TOG(COMPRESSOR INLET TOTAL TEMPRATURE OF GAS)= 518.70
TOW(COMPRESSOR INLET TEMPERATURE OF DROPLRET)= 513.70
PO(COMPRESSOR INLET TOTAL PRESSURE)=2116.80

DIN(INITIIL DROPLET DIAMETER OF SMALL DROPLET)=  20.0
DDIN(INITIAL DROPLET DIAMETER OF LARGE DROPLET)= 600.0

FND(DESIGN ROTATIONAL SPEED)= 9492.1

DSMASS(DESIGN MASS FLOW RATE)=   25.5000

BYPASS RATIO =      1.0050

COMPRESSOR INLET TOTAL TEMPERATURE(GAS PHASE) 518.70 R

COMPRESSOR INLET TOTAL PRESSURE=2116.80 LB/FT**2

PREB(FERCENT OF WATER THAT REBOUND AFTER IMPINGEMENT)= 50.0 PERCENT

ROTOR SPEED= 9492.1 RPM

CORRECTED ROTOR SPEED=  9492.1 RPM(  100.0PER CENT OF DESIGN CORRECTED SPEED)
```

```
*************** DESIGN POINT INFORMATION ************ ***

 ***** COMPRESSOR INLET *****

 TOTAL TEMPERATURE AT COMPRESSOR INLET= 518.70000
 TOTAL PRESSURE AT COMPRESSOR INLET=   2116.80
 STATIC TEMPERATURE AT COMPRESSOR INLET= 489.23241
 STATIC PRESSURE AT COMPRESSOR INLET=   1725.23
 STATIC DENSITY AT COMPRESSOR INLET=    .06610

 ACOUSTIC SPEED AT COMPRESSOR INLET=1084.47473
 AXIAL VELOCITY AT COMPRESSOR INLET= 594.81337
 MACH NUMBER AT COMPRESSOR INLET=    .54848
 STREAMTUBE AREA AT COMPRESSOR INLET=    .64861
 FLOW COEFFICIENT AT COMPRESSOR INLET=    .39261
```

********** DESIGN POINT INFORMATION ********** ***

***** STAGE= 1 *****

| | TOTAL TEMP | TOTAL PRESSURE | STATIC TEMP | STATIC PRESSURE | STATIC DENSITY |
|---|---|---|---|---|---|
| ROTOR INLET | 518.700 | 2116.800 | 487.912 | 1709.001 | .066 |
| ROTOR OUTLET | 567.614 | 2842.862 | 526.582 | 2185.821 | .078 |

| | AXIAL VELOCITY | ABSOLUTE VELOCITY | RELATIVE VELOCITY | TAN COMP OF ABS VEL | TAN COMP OF REL VEL |
|---|---|---|---|---|---|
| ROTOR INLET | 603.84985 | 607.98966 | 1008.08131 | 70.82921 | 807.21328 |
| ROTOR OUTLET | 571.04901 | 702.43644 | 734.24570 | 409.04717 | 461.54024 |

| | ROTOR SPEED | ABS MACH NUMBER | REL MACH NUMBER | REL TOTAL TEMP | REL TOTAL PRESSURE |
|---|---|---|---|---|---|
| ROTOR INLET | 878.042 | .561 | .931 | 572.552 | 2990.253 |
| ROTOR OUTLET | 870.587 | .624 | .653 | 571.429 | 7574.884 |

| | ABS FLOW ANGLE | REL FLOW ANGLE | STREAMTUBE AREA | RADIUS | FLOW COEFFICIENT |
|---|---|---|---|---|---|
| ROTOR INLET | 6.69000 | 53.20104 | .64323 | 10.60000 | .39857 |
| ROTOR OUTLET | 35.61433 | 38.94625 | .57395 | 10.51000 | .37692 |

STAGE TOTAL PRESSURE RATIO AT DESIGN POINT= 1.33500
STAGE ADIABATIC EFFICIENCY AT DESIGN POINT= .91272
ROTOR TOTAL PRESSURE RATIO AT DESIGN POINT= 1.34300
ROTOR ADIABATIC EFFICIENCY AT DESIGN POINT= .93300
ROTOR TOTAL TEMPERATURE RATIO AT DESIGN POINT= 1.09430

********** DESIGN POINT INFORMATION ********** ***

***** STAGE= 2 *****

| | TOTAL TEMP | TOTAL PRESSURE | STATIC TEMP | STATIC PRESSURE | STATIC DENSITY |
|---|---|---|---|---|---|
| ROTOR INLET | 567.614 | 2825.928 | 539.274 | 2361.973 | .082 |
| ROTOR OUTLET | 614.949 | 3673.706 | 578.855 | 2971.117 | .096 |

| | AXIAL VELOCITY | ABSOLUTE VELOCITY | RELATIVE VELOCITY | TAN COMP OF ABS VEL | TAN COMP OF REL VEL |
|---|---|---|---|---|---|
| ROTOR INLET | 580.14010 | 583.67613 | 993.42989 | 64.15055 | 806.43686 |
| ROTOR OUTLET | 527.36892 | 659.43115 | 702.93351 | 395.89255 | 464.75477 |

| | ROTOR SPEED | ABS MACH NUMBER | REL MACH NUMBER | REL TOTAL TEMP | REL TOTAL PRESSURE |
|---|---|---|---|---|---|
| ROTOR INLET | 870.587 | .513 | .873 | 621.370 | 3879.399 |
| ROTOR OUTLET | 860.647 | .559 | .596 | 619.882 | 8636.952 |

| | ABS FLOW ANGLE | REL FLOW ANGLE | STREAMTUBE AREA | RADIUS | FLOW COEFFICIENT |
|---|---|---|---|---|---|
| ROTOR INLET | 6.21000 | 54.26926 | .53542 | 10.51000 | .40981 |
| ROTOR OUTLET | 36.89530 | 41.38875 | .50261 | 10.39000 | .37253 |

STAGE TOTAL PRESSURE RATIO AT DESIGN POINT= 1.29300
STAGE ADIABATIC EFFICIENCY AT DESIGN POINT= .91221
ROTOR TOTAL PRESSURE RATIO AT DESIGN POINT= 1.30000
ROTOR ADIABATIC EFFICIENCY AT DESIGN POINT= .93300
ROTOR TOTAL TEMPERATURE RATIO AT DESIGN POINT= 1.08339

********** DESIGN POINT INFORMATION ********** ***

***** STAGE= 3 *****

| | TOTAL TEMP | TOTAL PRESSURE | STATIC TEMP | STATIC PRESSURE | STATIC DENSITY |
|---|---|---|---|---|---|
| ROTOR INLET | 614.949 | 3653.925 | 591.261 | 3183.551 | .101 |
| ROTOR OUTLET | 663.870 | 4768.372 | 636.907 | 4121.153 | .121 |

| | AXIAL VELOCITY | ABSOLUTE VELOCITY | RELATIVE VELOCITY | TAN COMP OF ABS VEL | TAN COMP OF REL VEL |
|---|---|---|---|---|---|
| ROTOR INLET | 533.97030 | 534.12747 | 1008.36504 | -12.95670 | 855.38049 |
| ROTOR OUTLET | 444.47534 | 570.67312 | 622.59028 | 357.92386 | 435.95909 |

| | ROTOR SPEED | ABS MACH NUMBER | REL MACH NUMBER | REL TOTAL TEMP | REL TOTAL PRESSURE |
|---|---|---|---|---|---|
| ROTOR INLET | 842.424 | .448 | .846 | 675.687 | 5084.668 |
| ROTOR OUTLET | 793.883 | .462 | .504 | 669.010 | 9128.642 |

| | ABS FLOW ANGLE | REL FLOW ANGLE | STREAMTUBE AREA | RADIUS | FLOW COEFFICIENT |
|---|---|---|---|---|---|
| ROTOR INLET | -1.49000 | 58.02558 | .47320 | 10.17000 | .39511 |
| ROTOR OUTLET | 38.84355 | 44.44581 | .47305 | 9.58400 | .32889 |

STAGE TOTAL PRESSURE RATIO AT DESIGN POINT= 1.30100
STAGE ADIABATIC EFFICIENCY AT DESIGN POINT= .97785
ROTOR TOTAL PRESSURE RATIO AT DESIGN POINT= 1.30500
ROTOR ADIABATIC EFFICIENCY AT DESIGN POINT= .99100
ROTOR TOTAL TEMPERATURE RATIO AT DESIGN POINT= 1.07955

********** DESIGN POINT INFORMATION ********** ***

***** STAGE= 4 *****

| | TOTAL TEMP | TOTAL PRESSURE | STATIC TEMP | STATIC PRESSURE | STATIC DENSITY |
|---|---|---|---|---|---|
| ROTOR INLET | 663.870 | 4753.756 | 625.256 | 3850.416 | .115 |
| ROTOR OUTLET | 708.797 | 5832.859 | 663.054 | 4809.573 | .130 |

| | AXIAL VELOCITY | ABSOLUTE VELOCITY | RELATIVE VELOCITY | TAN COMP OF ABS VEL | TAN COMP OF REL VEL |
|---|---|---|---|---|---|
| ROTOR INLET | 682.78673 | 682.81069 | 1025.73688 | 5.72023 | 765.46614 |
| ROTOR OUTLET | 649.18309 | 744.35839 | 759.38906 | 364.18568 | 393.99573 |

| | ROTOR SPEED | ABS MACH NUMBER | REL MACH NUMBER | REL TOTAL TEMP | REL TOTAL PRESSURE |
|---|---|---|---|---|---|
| ROTOR INLET | 771.186 | .558 | .838 | 712.395 | 6092.426 |
| ROTOR OUTLET | 758.181 | .591 | .603 | 710.679 | 13741.777 |

| | ABS FLOW ANGLE | REL FLOW ANGLE | STREAMTUBE AREA | RADIUS | FLOW COEFFICIENT |
|---|---|---|---|---|---|
| ROTOR INLET | .38000 | 48.26742 | .16138 | 9.31000 | .74226 |
| ROTOR OUTLET | 29.29201 | 31.25397 | .15035 | 9.15300 | .70573 |

STAGE TOTAL PRESSURE RATIO AT DESIGN POINT= 1.22300
STAGE ADIABATIC EFFICIENCY AT DESIGN POINT= .88919
ROTOR TOTAL PRESSURE RATIO AT DESIGN POINT= 1.22700
ROTOR ADIABATIC EFFICIENCY AT DESIGN POINT= .88500
ROTOR TOTAL TEMPERATURE RATIO AT DESIGN POINT= 1.06767

********** DESIGN POINT INFORMATION ********** ***

***** STAGE= 5 *****

| | TOTAL TEMP | TOTAL PRESSURE | STATIC TEMP | STATIC PRESSURE | STATIC DENSITY |
|---|---|---|---|---|---|
| ROTOR INLET | 708.797 | 5813.844 | 671.028 | 4792.730 | .134 |
| ROTOR OUTLET | 746.614 | 6982.427 | 699.441 | 5542.742 | .149 |

| | AXIAL VELOCITY | ABSOLUTE VELOCITY | RELATIVE VELOCITY | TAN COMP OF ABS VEL | TAN COMP OF REL VEL |
|---|---|---|---|---|---|
| ROTOR INLET | 668.00784 | 676.26003 | 926.96150 | 105.32404 | 642.66876 |
| ROTOR OUTLET | 632.44913 | 756.94816 | 711.05048 | 415.90662 | 324.55245 |

| | ROTOR SPEED | ABS MACH NUMBER | REL MACH NUMBER | REL TOTAL TEMP | REL TOTAL PRESSURE |
|---|---|---|---|---|---|
| ROTOR INLET | 747.993 | .533 | .731 | 741.990 | 6832.319 |
| ROTOR OUTLET | 740.869 | .585 | .550 | 741.081 | 14096.645 |

| | ABS FLOW ANGLE | REL FLOW ANGLE | STREAMTUBE AREA | RADIUS | FLOW COEFFICIENT |
|---|---|---|---|---|---|
| ROTOR INLET | 8.86000 | 43.89245 | .14222 | 9.03000 | .75389 |
| ROTOR OUTLET | 33.32942 | 27.19481 | .13539 | 8.94400 | .71376 |

STAGE TOTAL PRESSURE RATIO AT DESIGN POINT= 1.19400
STAGE ADIABATIC EFFICIENCY AT DESIGN POINT= .96495
ROTOR TOTAL PRESSURE RATIO AT DESIGN POINT= 1.20100
ROTOR ADIABATIC EFFICIENCY AT DESIGN POINT= .99900
ROTOR TOTAL TEMPERATURE RATIO AT DESIGN POINT= 1.05335

********** DESIGN POINT INFORMATION ********** ***

***** STAGE= 6 *****

| | TOTAL TEMP | TOTAL PRESSURE | STATIC TEMP | STATIC PRESSURE | STATIC DENSITY |
|---|---|---|---|---|---|
| ROTOR INLET | 746.614 | 6941.730 | 713.972 | 5926.540 | .156 |
| ROTOR OUTLET | 786.028 | 8149.591 | 747.285 | 6811.243 | .171 |

| | AXIAL VELOCITY | ABSOLUTE VELOCITY | RELATIVE VELOCITY | TAN COMP OF ABS VEL | TAN COMP OF REL VEL |
|---|---|---|---|---|---|
| ROTOR INLET | 629.34161 | 629.56023 | 958.38077 | 16.58981 | 722.78824 |
| ROTOR OUTLET | 594.91699 | 687.07378 | 711.05095 | 343.72086 | 389.44462 |

| | ROTOR SPEED | ABS MACH NUMBER | REL MACH NUMBER | REL TOTAL TEMP | REL TOTAL PRESSURE |
|---|---|---|---|---|---|
| ROTOR INLET | 739.378 | .482 | .733 | 789.618 | 8462.191 |
| ROTOR OUTLET | 733.165 | .514 | .532 | 788.793 | 16491.997 |

| | ABS FLOW ANGLE | REL FLOW ANGLE | STREAMTUBE AREA | RADIUS | FLOW COEFFICIENT |
|---|---|---|---|---|---|
| ROTOR INLET | 1.41000 | 48.95347 | .12989 | 8.92600 | .72753 |
| ROTOR OUTLET | 30.01772 | 33.20956 | .12514 | 8.85100 | .68774 |

STAGE TOTAL PRESSURE RATIO AT DESIGN POINT= 1.16100
STAGE ADIABATIC EFFICIENCY AT DESIGN POINT= .81537
ROTOR TOTAL PRESSURE RATIO AT DESIGN POINT= 1.17400
ROTOR ADIABATIC EFFICIENCY AT DESIGN POINT= .87900
ROTOR TOTAL TEMPERATURE RATIO AT DESIGN POINT= 1.05279

********** DESIGN POINT INFORMATION ********** ***

***** STAGE= 7 *****

| | TOTAL TEMP | TOTAL PRESSURE | STATIC TEMP | STATIC PRESSURE | STATIC DENSITY |
|---|---|---|---|---|---|
| ROTOR INLET | 786.028 | 8059.348 | 755.219 | 6993.435 | .174 |
| ROTOR OUTLET | 822.002 | 9373.022 | 781.033 | 7813.181 | .188 |

| | AXIAL VELOCITY | ABSOLUTE VELOCITY | RELATIVE VELOCITY | TAN COMP OF ABS VEL | TAN COMP OF REL VEL |
|---|---|---|---|---|---|
| ROTOR INLET | 608.46583 | 612.58727 | 895.72552 | 70.94005 | 657.33822 |
| ROTOR OUTLET | 598.43691 | 707.65127 | 688.43869 | 377.68185 | 340.32497 |

| | ROTOR SPEED | ABS MACH NUMBER | REL MACH NUMBER | REL TOTAL TEMP | REL TOTAL PRESSURE |
|---|---|---|---|---|---|
| ROTOR INLET | 728.278 | .456 | .667 | 821.089 | 9408.952 |
| ROTOR OUTLET | 718.007 | .518 | .504 | 819.821 | 17494.804 |

| | ABS FLOW ANGLE | REL FLOW ANGLE | STREAMTUBE AREA | RADIUS | FLOW COEFFICIENT |
|---|---|---|---|---|---|
| ROTOR INLET | 6.55000 | 47.21108 | .12043 | 8.79200 | .71839 |
| ROTOR OUTLET | 32.25659 | 29.62645 | .11335 | 8.66800 | .70655 |

STAGE TOTAL PRESSURE RATIO AT DESIGN POINT= 1.15200
STAGE ADIABATIC EFFICIENCY AT DESIGN POINT= .88759
ROTOR TOTAL PRESSURE RATIO AT DESIGN POINT= 1.16300
ROTOR ADIABATIC EFFICIENCY AT DESIGN POINT= .95000
ROTOR TOTAL TEMPERATURE RATIO AT DESIGN POINT= 1.04577

********** DESIGN POINT INFORMATION ********** ***

***** STAGE= 8 *****

| | TOTAL TEMP | TOTAL PRESSURE | STATIC TEMP | STATIC PRESSURE | STATIC DENSITY |
|---|---|---|---|---|---|
| ROTOR INLET | 822.002 | 9284.369 | 790.955 | 8095.411 | .192 |
| ROTOR OUTLET | 873.933 | 11224.802 | 822.825 | 9047.821 | .206 |

| | AXIAL VELOCITY | ABSOLUTE VELOCITY | RELATIVE VELOCITY | TAN COMP OF ABS VEL | TAN COMP OF REL VEL |
|---|---|---|---|---|---|
| ROTOR INLET | 613.25442 | 615.92757 | 898.46478 | 57.32174 | 656.62621 |
| ROTOR OUTLET | 605.81241 | 792.32318 | 635.68878 | 510.65385 | 192.52565 |

| | ROTOR SPEED | ABS MACH NUMBER | REL MACH NUMBER | REL TOTAL TEMP | REL TOTAL PRESSURE |
|---|---|---|---|---|---|
| ROTOR INLET | 713.948 | .448 | .654 | 857.020 | 10770.488 |
| ROTOR OUTLET | 703.180 | .566 | .454 | 855.732 | 17685.797 |

| | ABS FLOW ANGLE | REL FLOW ANGLE | STREAMTUBE AREA | RADIUS | FLOW COEFFICIENT |
|---|---|---|---|---|---|
| ROTOR INLET | 5.24000 | 46.95613 | .10811 | 8.61900 | .74443 |
| ROTOR OUTLET | 40.12835 | 17.63013 | .10186 | 8.48900 | .73540 |

STAGE TOTAL PRESSURE RATIO AT DESIGN POINT= 1.17700
STAGE ADIABATIC EFFICIENCY AT DESIGN POINT= .73978
ROTOR TOTAL PRESSURE RATIO AT DESIGN POINT= 1.20900
ROTOR ADIABATIC EFFICIENCY AT DESIGN POINT= .86700
ROTOR TOTAL TEMPERATURE RATIO AT DESIGN POINT= 1.06318

********** DESIGN POINT INFORMATION ********** ***

***** STAGE= 9 *****

| | TOTAL TEMP | TOTAL PRESSURE | STATIC TEMP | STATIC PRESSURE | STATIC DENSITY |
|---|---|---|---|---|---|
| ROTOR INLET | 873.933 | 10927.702 | 839.963 | 9482.936 | .212 |
| ROTOR OUTLET | 908.493 | 12468.508 | 858.171 | 10161.577 | .222 |

| | AXIAL VELOCITY | ABSOLUTE VELOCITY | RELATIVE VELOCITY | TAN COMP OF ABS VEL | TAN COMP OF REL VEL |
|---|---|---|---|---|---|
| ROTOR INLET | 619.79666 | 645.85147 | 808.72977 | 181.59355 | 519.51509 |
| ROTOR OUTLET | 621.17319 | 787.58012 | 658.29178 | 484.17601 | 217.92665 |

| | ROTOR SPEED | ABS MACH NUMBER | REL MACH NUMBER | REL TOTAL TEMP | REL TOTAL PRESSURE |
|---|---|---|---|---|---|
| ROTOR INLET | 701.109 | .457 | .572 | 893.227 | 11815.435 |
| ROTOR OUTLET | 702.103 | .551 | .461 | 893.339 | 20274.187 |

| | ABS FLOW ANGLE | REL FLOW ANGLE | STREAMTUBE AREA | RADIUS | FLOW COEFFICIENT |
|---|---|---|---|---|---|
| ROTOR INLET | 16.23000 | 39.96982 | .09697 | 8.46400 | .77257 |
| ROTOR OUTLET | 37.93478 | 19.33244 | .09225 | 8.47600 | .77429 |

STAGE TOTAL PRESSURE RATIO AT DESIGN POINT= 1.13400
STAGE ADIABATIC EFFICIENCY AT DESIGN POINT= .90329
ROTOR TOTAL PRESSURE RATIO AT DESIGN POINT= 1.14100
ROTOR ADIABATIC EFFICIENCY AT DESIGN POINT= .95000
ROTOR TOTAL TEMPERATURE RATIO AT DESIGN POINT= 1.03954

********** DESIGN POINT INFORMATION ********** ***

***** STAGE=10 *****

| | TOTAL TEMP | TOTAL PRESSURE | STATIC TEMP | STATIC PRESSURE | STATIC DENSITY |
|---|---|---|---|---|---|
| ROTOR INLET | 908.493 | 12392.015 | 868.068 | 10524.261 | .227 |
| ROTOR OUTLET | 960.272 | 14858.025 | 904.614 | 11976.885 | .248 |

| | AXIAL VELOCITY | ABSOLUTE VELOCITY | RELATIVE VELOCITY | TAN COMP OF ABS VEL | TAN COMP OF REL VEL |
|---|---|---|---|---|---|
| ROTOR INLET | 676.36161 | 705.77656 | 1078.73177 | 201.63215 | 840.35541 |
| ROTOR OUTLET | 659.51612 | 830.57551 | 855.63381 | 504.87043 | 545.11255 |

| | ROTOR SPEED | ABS MACH NUMBER | REL MACH NUMBER | REL TOTAL TEMP | REL TOTAL PRESSURE |
|---|---|---|---|---|---|
| ROTOR INLET | 1041.988 | .491 | .751 | 962.504 | 15246.275 |
| ROTOR OUTLET | 1049.983 | .567 | .584 | 963.701 | 34518.645 |

| | ABS FLOW ANGLE | REL FLOW ANGLE | STREAMTUBE AREA | RADIUS | FLOW COEFFICIENT |
|---|---|---|---|---|---|
| ROTOR INLET | 16.50000 | 51.17109 | .08275 | 8.47100 | .57535 |
| ROTOR OUTLET | 37.43465 | 39.57489 | .07771 | 8.53600 | .56102 |

STAGE TOTAL PRESSURE RATIO AT DESIGN POINT= 1.19200
STAGE ADIABATIC EFFICIENCY AT DESIGN POINT= .87744
ROTOR TOTAL PRESSURE RATIO AT DESIGN POINT= 1.19900
ROTOR ADIABATIC EFFICIENCY AT DESIGN POINT= .91000
ROTOR TOTAL TEMPERATURE RATIO AT DESIGN POINT= 1.05699

********** DESIGN POINT INFORMATION ********** ***

***** STAGE=11 *****

| | TOTAL TEMP | TOTAL PRESSURE | STATIC TEMP | STATIC PRESSURE | STATIC DENSITY |
|---|---|---|---|---|---|
| ROTOR INLET | 960.272 | 14771.281 | 917.855 | 12548.939 | .256 |
| ROTOR OUTLET | 1015.289 | 17828.937 | 952.427 | 14134.824 | .278 |

| | AXIAL VELOCITY | ABSOLUTE VELOCITY | RELATIVE VELOCITY | TAN COMP OF ABS VEL | TAN COMP OF REL VEL |
|---|---|---|---|---|---|
| ROTOR INLET | 667.92072 | 724.95970 | 1027.77536 | 281.86605 | 781.15561 |
| ROTOR OUTLET | 650.50780 | 885.42704 | 801.07480 | 600.68346 | 467.50446 |

| | ROTOR SPEED | ABS MACH NUMBER | REL MACH NUMBER | REL TOTAL TEMP | REL TOTAL PRESSURE |
|---|---|---|---|---|---|
| ROTOR INLET | 1063.022 | .491 | .696 | 1003.108 | 17291.099 |
| ROTOR OUTLET | 1068.188 | .589 | .533 | 1003.899 | 35080.785 |

| | ABS FLOW ANGLE | REL FLOW ANGLE | STREAMTUBE AREA | RADIUS | FLOW COEFFICIENT |
|---|---|---|---|---|---|
| ROTOR INLET | 22.78000 | 49.46817 | .07431 | 8.64200 | .56888 |
| ROTOR OUTLET | 42.71960 | 35.70390 | .07029 | 8.68400 | .55405 |

STAGE TOTAL PRESSURE RATIO AT DESIGN POINT= 1.19700
STAGE ADIABATIC EFFICIENCY AT DESIGN POINT= .88885
ROTOR TOTAL PRESSURE RATIO AT DESIGN POINT= 1.20700
ROTOR ADIABATIC EFFICIENCY AT DESIGN POINT= .93400
ROTOR TOTAL TEMPERATURE RATIO AT DESIGN POINT= 1.05729

********** DESIGN POINT INFORMATION ********** ***

***** STAGE=12 *****

| | TOTAL TEMP | TOTAL PRESSURE | STATIC TEMP | STATIC PRESSURE | STATIC DENSITY |
|---|---|---|---|---|---|
| ROTOR INLET | 1015.289 | 17681.224 | 975.525 | 15293.334 | .294 |
| ROTOR OUTLET | 1069.470 | 21058.337 | 1008.283 | 16977.947 | .316 |

| | AXIAL VELOCITY | ABSOLUTE VELOCITY | RELATIVE VELOCITY | TAN COMP OF ABS VEL | TAN COMP OF REL VEL |
|---|---|---|---|---|---|
| ROTOR INLET | 641.30607 | 704.09145 | 1013.41041 | 290.63945 | 784.68285 |
| ROTOR OUTLET | 634.24236 | 876.33443 | 790.93392 | 604.73025 | 472.56016 |

| | ROTOR SPEED | ABS MACH NUMBER | REL MACH NUMBER | REL TOTAL TEMP | REL TOTAL PRESSURE |
|---|---|---|---|---|---|
| ROTOR INLET | 1075.322 | .463 | .667 | 1057.900 | 20528.324 |
| ROTOR OUTLET | 1077.290 | .568 | .512 | 1058.142 | 39801.685 |

| | ABS FLOW ANGLE | REL FLOW ANGLE | STREAMTUBE AREA | RADIUS | FLOW COEFFICIENT |
|---|---|---|---|---|---|
| ROTOR INLET | 24.28000 | 50.74154 | .06749 | 8.74200 | .54621 |
| ROTOR OUTLET | 43.63548 | 36.68899 | .06354 | 8.75800 | .54020 |

STAGE TOTAL PRESSURE RATIO AT DESIGN POINT= 1.18000
STAGE ADIABATIC EFFICIENCY AT DESIGN POINT= .87100
ROTOR TOTAL PRESSURE RATIO AT DESIGN POINT= 1.19100
ROTOR ADIABATIC EFFICIENCY AT DESIGN POINT= .92400
ROTOR TOTAL TEMPERATURE RATIO AT DESIGN POINT= 1.05337

********** DESIGN POINT INFORMATION ********** ***

***** STAGE=13 *****

| | TOTAL TEMP | TOTAL PRESSURE | STATIC TEMP | STATIC PRESSURE | STATIC DENSITY |
|---|---|---|---|---|---|
| ROTOR INLET | 1069.470 | 20863.844 | 1029.939 | 18180.869 | .331 |
| ROTOR OUTLET | 1115.935 | 24139.468 | 1058.174 | 19855.060 | .352 |

| | AXIAL VELOCITY | ABSOLUTE VELOCITY | RELATIVE VELOCITY | TAN COMP OF ABS VEL | TAN COMP OF REL VEL |
|---|---|---|---|---|---|
| ROTOR INLET | 633.58192 | 704.26631 | 1000.50439 | 307.51420 | 774.32744 |
| ROTOR OUTLET | 631.31546 | 853.83022 | 813.16051 | 574.86258 | 512.51435 |

| | ROTOR SPEED | ABS MACH NUMBER | REL MACH NUMBER | REL TOTAL TEMP | REL TOTAL PRESSURE |
|---|---|---|---|---|---|
| ROTOR INLET | 1081.842 | .451 | .641 | 1109.721 | 23879.938 |
| ROTOR OUTLET | 1087.377 | .541 | .515 | 1110.581 | 47102.224 |

| | ABS FLOW ANGLE | REL FLOW ANGLE | STREAMTUBE AREA | RADIUS | FLOW COEFFICIENT |
|---|---|---|---|---|---|
| ROTOR INLET | 25.79000 | 50.70876 | .06067 | 8.79500 | .53963 |
| ROTOR OUTLET | 42.32034 | 39.07038 | .05728 | 8.84000 | .53770 |

STAGE TOTAL PRESSURE RATIO AT DESIGN POINT= 1.14500
STAGE ADIABATIC EFFICIENCY AT DESIGN POINT= .86629
ROTOR TOTAL PRESSURE RATIO AT DESIGN POINT= 1.15700
ROTOR ADIABATIC EFFICIENCY AT DESIGN POINT= .93700
ROTOR TOTAL TEMPERATURE RATIO AT DESIGN POINT= 1.04345

********** DESIGN POINT INFORMATION ********** ***

***** STAGE=14 *****

| | TOTAL TEMP | TOTAL PRESSURE | STATIC TEMP | STATIC PRESSURE | STATIC DENSITY |
|---|---|---|---|---|---|
| ROTOR INLET | 1115.935 | 23889.101 | 1077.633 | 21011.397 | .365 |
| ROTOR OUTLET | 1171.330 | 28189.140 | 1112.238 | 23273.804 | .392 |

| | AXIAL VELOCITY | ABSOLUTE VELOCITY | RELATIVE VELOCITY | TAN COMP OF ABS VEL | TAN COMP OF REL VEL |
|---|---|---|---|---|---|
| ROTOR INLET | 634.92439 | 695.17343 | 1030.02084 | 283.08439 | 811.05730 |
| ROTOR OUTLET | 623.19394 | 856.55711 | 795.76814 | 602.12170 | 494.84973 |

| | ROTOR SPEED | ABS MACH NUMBER | REL MACH NUMBER | REL TOTAL TEMP | REL TOTAL PRESSURE |
|---|---|---|---|---|---|
| ROTOR INLET | 1094.142 | .436 | .646 | 1161.720 | 27693.438 |
| ROTOR OUTLET | 1096.971 | .536 | .492 | 1162.086 | 51903.412 |

| | ABS FLOW ANGLE | REL FLOW ANGLE | STREAMTUBE AREA | RADIUS | FLOW COEFFICIENT |
|---|---|---|---|---|---|
| ROTOR INLET | 23.93000 | 51.94490 | .05481 | 8.89500 | .54078 |
| ROTOR OUTLET | 44.01476 | 38.45148 | .05203 | 8.91800 | .53079 |

STAGE TOTAL PRESSURE RATIO AT DESIGN POINT= 1.17300
STAGE ADIABATIC EFFICIENCY AT DESIGN POINT= .89082
ROTOR TOTAL PRESSURE RATIO AT DESIGN POINT= 1.18000
ROTOR ADIABATIC EFFICIENCY AT DESIGN POINT= .92800
ROTOR TOTAL TEMPERATURE RATIO AT DESIGN POINT= 1.04964

********** DESIGN POINT INFORMATION ********** ***

***** STAGE=15 *****

| | TOTAL TEMP | TOTAL PRESSURE | STATIC TEMP | STATIC PRESSURE | STATIC DENSITY |
|---|---|---|---|---|---|
| ROTOR INLET | 1171.330 | 28021.916 | 1137.219 | 25119.100 | .414 |
| ROTOR OUTLET | 1214.915 | 31776.853 | 1168.097 | 27453.245 | .441 |

| | AXIAL VELOCITY | ABSOLUTE VELOCITY | RELATIVE VELOCITY | TAN COMP OF ABS VEL | TAN COMP OF REL VEL |
|---|---|---|---|---|---|
| ROTOR INLET | 614.55554 | 658.27809 | 1061.68927 | 235.90577 | 865.73991 |
| ROTOR OUTLET | 600.59056 | 773.42782 | 860.18593 | 487.32081 | 615.80095 |

| | ROTOR SPEED | ABS MACH NUMBER | REL MACH NUMBER | REL TOTAL TEMP | REL TOTAL PRESSURE |
|---|---|---|---|---|---|
| ROTOR INLET | 1101.646 | .402 | .649 | 1225.949 | 33169.434 |
| ROTOR OUTLET | 1103.122 | .467 | .519 | 1226.027 | 66767.670 |

| | ABS FLOW ANGLE | REL FLOW ANGLE | STREAMTUBE AREA | RADIUS | FLOW COEFFICIENT |
|---|---|---|---|---|---|
| ROTOR INLET | 20.90000 | 54.63052 | .04999 | 8.95600 | .52343 |
| ROTOR OUTLET | 39.05597 | 45.71642 | .04807 | 8.96800 | .51153 |

STAGE TOTAL PRESSURE RATIO AT DESIGN POINT= 1.12900
STAGE ADIABATIC EFFICIENCY AT DESIGN POINT= .89336
ROTOR TOTAL PRESSURE RATIO AT DESIGN POINT= 1.13400
ROTOR ADIABATIC EFFICIENCY AT DESIGN POINT= .92900
ROTOR TOTAL TEMPERATURE RATIO AT DESIGN POINT= 1.03721

********** DESIGN POINT INFORMATION ********** ***

***** STAGE=16 *****

| | TOTAL TEMP | TOTAL PRESSURE | STATIC TEMP | STATIC PRESSURE | STATIC DENSITY |
|---|---|---|---|---|---|
| ROTOR INLET | 1214.915 | 31636.743 | 1184.174 | 28759.551 | .455 |
| ROTOR OUTLET | 1269.735 | 36888.442 | 1225.530 | 32301.589 | .494 |

| | AXIAL VELOCITY | ABSOLUTE VELOCITY | RELATIVE VELOCITY | TAN COMP OF ABS VEL | TAN COMP OF REL VEL |
|---|---|---|---|---|---|
| ROTOR INLET | 599.32926 | 626.61344 | 1100.66508 | 182.89025 | 923.18366 |
| ROTOR OUTLET | 564.18324 | 754.11217 | 828.10710 | 500.38227 | 606.18366 |

| | ROTOR SPEED | ABS MACH NUMBER | REL MACH NUMBER | REL TOTAL TEMP | REL TOTAL PRESSURE |
|---|---|---|---|---|---|
| ROTOR INLET | 1106.074 | .376 | .660 | 1279.023 | 38306.884 |
| ROTOR OUTLET | 1106.566 | .445 | .489 | 1278.854 | 72079.393 |

| | ABS FLOW ANGLE | REL FLOW ANGLE | STREAMTUBE AREA | RADIUS | FLOW COEFFICIENT |
|---|---|---|---|---|---|
| ROTOR INLET | 16.87000 | 57.00844 | .04662 | 8.99200 | .51046 |
| ROTOR OUTLET | 41.57028 | 47.05527 | .04563 | 8.99600 | .48053 |

STAGE TOTAL PRESSURE RATIO AT DESIGN POINT= 1.15900
STAGE ADIABATIC EFFICIENCY AT DESIGN POINT= .89353
ROTOR TOTAL PRESSURE RATIO AT DESIGN POINT= 1.16600
ROTOR ADIABATIC EFFICIENCY AT DESIGN POINT= .93400
ROTOR TOTAL TEMPERATURE RATIO AT DESIGN POINT= 1.04512

********** DESIGN POINT INFORMATION ********** ***

********** OVERALL PERFORMANCE AT DESIGN POINT **** ******

COMPRESSOR INLET TOTAL TEMPERATURE= 518.70

COMPRESSOR INLET TOTAL PRESSURE= 2116.80

CORRECTED MASS FLOW RATE= 255.000

OVERALL TOTAL PRESSURE RATIO= 17.3219

OVERALL TOTAL TEMPERATURE RATIO=2.4479

OVERALL ADIABATIC EFFICIENCY= .8293

OVERALL TEMPERATURE RISE= 751.035

| | 1 | 2 | 3 | 4 | 5 | 6 | 7 | 8 | 9 | 10 | 11 | 12 | 13 | 14 | 15 | 16 |
|---|---|---|---|---|---|---|---|---|---|---|---|---|---|---|---|---|
| BET1SR(I) | 53.20 | 54.27 | 58.03 | 48.27 | 43.89 | 48.95 | 47.21 | 46.96 | 39.97 | 51.17 | 49.47 | 50.74 | 50.71 | 51.94 | 54.63 | 57.01 |
| BET2SR(I) | 38.95 | 41.39 | 44.45 | 31.25 | 27.19 | 33.21 | 29.63 | 17.63 | 19.33 | 39.57 | 35.70 | 36.69 | 39.07 | 38.45 | 45.72 | 47.08 |
| AINCSR(I) | .32 | -1.34 | 1.96 | -.65 | 3.95 | 3.26 | 4.20 | 4.73 | -5.17 | 1.65 | 1.45 | 2.40 | 2.93 | 1.92 | .47 | .67 |
| ADEVSR(I) | -1.45 | -.97 | 6.72 | 1.54 | .43 | 6.57 | 4.90 | 2.38 | 3.27 | 1.65 | 2.11 | 2.79 | 2.68 | 1.53 | .62 | 1.68 |
| BET1SS(I) | 35.61 | 36.90 | 38.84 | 29.29 | 33.33 | 30.02 | 32.26 | 40.13 | 37.93 | 37.43 | 42.72 | 43.64 | 42.32 | 44.01 | 39.06 | 41.57 |
| BET2SS(I) | 6.21 | -1.49 | .38 | 8.86 | 1.41 | 6.55 | 5.24 | 16.23 | 16.50 | 22.78 | 24.28 | 25.79 | 23.93 | 20.90 | 16.87 | 3.03 |
| AINCSS(I) | -1.46 | .50 | 1.67 | 2.51 | 2.95 | -2.66 | 3.85 | 2.43 | 1.11 | 1.02 | 1.10 | 1.01 | .38 | -.02 | .22 | 1.[illegible] |
| ADEVSS(I) | .10 | .10 | .10 | .10 | .10 | .10 | .10 | .10 | .10 | .10 | .10 | .10 | .10 | .10 | .10 | .10 |
| TD(I) | 519. | 568. | 615. | 664. | 709. | 747. | 786. | 822. | 874. | 908. | 960. | 1015. | 1069. | 1116. | 1171. | 1215. |
| OMEGR(I) | .047 | .046 | .007 | .069 | .001 | .072 | .031 | .114 | .036 | .058 | .049 | .057 | .042 | .054 | .040 | .045 |
| OMEGS(I) | .026 | .028 | .023 | .016 | .028 | .067 | .057 | .136 | .033 | .030 | .040 | .048 | .058 | .034 | .032 | .048 |
| SITADR(I) | .0227 | .0211 | .0032 | .0453 | .0009 | .0413 | .0158 | .0761 | .0175 | .0250 | .0279 | .0334 | .0213 | .0303 | .0188 | .023 |
| SITADS(I) | .0147 | .0173 | .0128 | .0070 | .0142 | .0293 | .0254 | .0743 | .0158 | .0158 | .0218 | .0251 | .0297 | .0187 | .0154 | .019 |
| DEQR(I) | 1.632 | 1.664 | 1.693 | 1.649 | 1.608 | 1.644 | 1.552 | 1.754 | 1.527 | 1.554 | 1.594 | 1.581 | 1.506 | 1.593 | 1.482 | 1.61 |
| DEQS(I) | 1.863 | 1.905 | .736 | 1.656 | 1.823 | 1.619 | 1.665 | 1.778 | 1.620 | 1.663 | 1.809 | 1.765 | 1.724 | 1.836 | 1.688 | 1.85 |

********** INITIAL FLOW COEFFICIENT= .350 (STAGE= 1 ) **********

STAGE TOTAL PRESSURE RATIO= 1.39545
STAGE TOTAL TEMPERATURE RATIO= 1.11005
STAGE ADIABATIC EFFICIENCY= .90768

STAGE FLOW COEFFICIENT= .350
AXIAL VELOCITY= 530.30
ROTOR SPEED=1515.04

| | *ROTOR INLET* | *ROTOR OUTLET* | *STATOR OUTLET* |
|---|---|---|---|
| TOTAL PRESSURE | 2116.8000 | 2972.3039 | 2953.8901 |
| STATIC PRESSURE | 1796.7061 | 2336.4786 | 2595.6467 |
| TOTAL TEMPERATURE(GAS) | 518.7000 | 575.7813 | 575.7813 |
| STATIC TEMPERATURE(GAS) | 494.9447 | 537.4990 | 554.8911 |
| STATIC DENSITY(GAS) | .0680 | .0815 | .0877 |
| STATIC DENSITY(MIXTURE) | .0680 | .0815 | .0877 |
| AXIAL VELOCITY | 530.3012 | 500.4600 | 498.5308 |
| ABSOLUTE VELOCITY | 534.0588 | 678.0785 | 500.9018 |
| RELATIVE VELOCITY | 972.1732 | 648.9066 | |
| BLADE SPEED | 878.0425 | 870.5874 | 870.5874 |
| TANG. COMP. OF ABS. VEL. | 63.2411 | 457.5262 | |
| TANG. COMP. OF REL. VEL. | 814.8014 | 413.0612 | |
| ACOUSTIC SPEED | 1090.7875 | 1154.9161 | 1154.9567 |
| ABSOLUTE MACH NUMBER | .4896 | .5965 | .4337 |
| RELATIVE MACH NUMBER | .8913 | .5709 | |
| FLOW COEFFICIENT | .3500 | .3303 | .3522 |
| FLOW AREA | .6486 | .5739 | .5354 |
| ABSOLUTE FLOW ANGLE | 6.8007 | 42.4339 | 5.5782 |
| RELATIVE FLOW ANGLE | 56.9425 | 39.5350 | |
| INCIDENCE | 4.0625 | 5.3639 | |
| DEVIATION | | -.8650 | -.6318 |
| DIFFUSION RATIO | | 1.7936 | 1.7640 |
| MOMENTUM THICKNESS | | .0355 | .0202 |
| OMEGA (GAS) | | .06249 | .02896 |
| OMEGA (TOTAL) | | .06249 | .02896 |

```
********************   INITIAL FLOW COEFFICIENT=  .350 (ISTAGE=  1 )  ********************

STAGE PERFORMANCE AFTER INTER-STAGE ADJUSTMENT(JPERFM=2)

STAGE TOTAL PRESSURE RATIO=      1.39545
STAGE TOTAL TEMPERATURE RATIO=     1.11005
STAGE ADIABATIC EFFICIENCY=       .90768

        **STAGE INLET**     **STAGE OUTLET**     **STAGE OUTLET**
                              (BEFORE INTER-       (AFTER INTER-
                               STAGE ADJUST-        STAGE ADJUST-
                               MENT)                MENT)
XV=          .00000              .00000               .00000
XW=               0                   0                    0
XWW=              0                   0                    0
XWT=              0                   0                    0
XAIR=        1.00000             1.00000              1.00000
XMETAN=               0                   0                    0
XGAS         1.00000             1.00000              1.00000
WMASS=               0                   0                    0
WWMASS=              0                   0                    0
WTMASS=              0                   0                    0
AMASS=       23.40301            23.40301             23.40301
CHMASS=              0                   0                    0
VMASS=          .00000              .00000               .00000
GMASS=       23.40301            23.40301             23.40301
TMASS=       23.40301            23.40301             23.40301
WS=          .00000              .00000               .00000
RHOA=         .07649              .08147               .08767
RHOM=         .06805              .08147               .08767
RHOG=         .06804              .08147               .08767
TG=      518.70000           575.78131            575.78131
TW=      513.70000           513.70000            513.70000
TWW=      513.70000                   0             513.70000
P=      2116.80000          2972.30393           2953.89015
TB=      671.40656                   0            688.10465
TDEW=      271.99506           274.74640            274.74640
```

********** INITIAL FLOW COEFFICIENT= .350 (STAGE= 2 ) **********

STAGE TOTAL PRESSURE RATIO= 1.34535
STAGE TOTAL TEMPERATURE RATIO= 1.09898
STAGE ADIABATIC EFFICIENCY= .89189

STAGE FLOW COEFFICIENT= .352
AXIAL VELOCITY= 498.56
ROTOR SPEED=1415.64

| | *ROTOR INLET* | *ROTOR OUTLET* | *STATOR OUTLET* |
|---|---|---|---|
| TOTAL PRESSURE | 2953.8901 | 3989.4603 | 3974.0164 |
| STATIC PRESSURE | 2595.6148 | 3295.0394 | 3616.3800 |
| TOTAL TEMPERATURE(GAS) | 575.7813 | 632.7695 | 632.7695 |
| STATIC TEMPERATURE(GAS) | 554.9133 | 599.1572 | 615.9652 |
| STATIC DENSITY(GAS) | .0877 | .1031 | .1100 |
| STATIC DENSITY(MIXTURE) | .0877 | .1031 | .1100 |
| AXIAL VELOCITY | 498.5569 | 451.7273 | 449.4317 |
| ABSOLUTE VELOCITY | 500.9291 | 635.8535 | 449.5905 |
| RELATIVE VELOCITY | 961.2856 | 612.1701 | |
| BLADE SPEED | 870.5874 | 860.6473 | 842.4238 |
| TANG. COMP. OF ABS. VEL. | 48.6927 | 447.4953 | |
| TANG. COMP. OF REL. VEL. | 821.8948 | 413.1520 | |
| ACOUSTIC SPEED | 1154.6320 | 1216.4674 | 1216.4916 |
| ABSOLUTE MACH NUMBER | .4338 | .5300 | .3696 |
| RELATIVE MACH NUMBER | .8325 | .5102 | |
| FLOW COEFFICIENT | .3522 | .3191 | .3326 |
| FLOW AREA | .5354 | .5026 | .4732 |
| ABSOLUTE FLOW ANGLE | 5.5782 | 44.7303 | -1.5264 |
| RELATIVE FLOW ANGLE | 58.7592 | 42.4462 | |
| INCIDENCE | 3.1492 | 8.3303 | |
| DEVIATION | | .0862 | -.0364 |
| DIFFUSION RATIO | | 1.9159 | 1.8989 |
| MOMENTUM THICKNESS | | .0442 | .0173 |
| OMEGA (GAS) | | .08039 | .02224 |
| OMEGA (TOTAL) | | .08039 | .02224 |

```
********************   INITIAL FLOW COEFFICIENT=  .350 (ISTAGE=  2 )  ********************

   STAGE PERFORMANCE AFTER INTER-STAGE ADJUSTMENT(JPERFM=2)

   STAGE TOTAL PRESSURE RATIO=      1.34535
   STAGE TOTAL TEMPERATURE RATIO=     1.09898
   STAGE ADIABATIC EFFICIENCY=       .89189

          **STAGE INLET**     **STAGE OUTLET**     **STAGE OUTLET**
                                (BEFORE INTER-       (AFTER INTER-
                                 STAGE ADJUST-        STAGE ADJUST-
                                 MENT)                MENT)
   XU=          .00000              .00000               .00000
   XW=               0                   0                    0
   XWW=              0                   0                    0
   XWT=              0                   0                    0
   XAIR=        1.00000             1.00000              1.00000
   XMETAN=             0                   0                    0
   XGAS         1.00000             1.00000              1.00000
   WMASS=              0                   0                    0
   WWMASS=             0                   0                    0
   WTMASS=             0                   0                    0
   AMASS=       23.40301            23.40301             23.40301
   CHMASS=             0                   0                    0
   UMASS=         .00000              .00000               .00000
   GMASS=       23.40301            23.40301             23.40301
   TMASS=       23.40301            23.40301             23.40301
   WS=          .00000              .00000               .00000
   RHOA=         .09616              .10306               .11004
   RHOM=         .06805              .10306               .11004
   RHOG=         .08767              .10306               .11004
   TG=      575.78131           632.76945            632.76945
   TW=      513.70000           513.70000            513.70000
   TWW=      513.70000                  0             513.70000
   P=      2953.89015          3989.46031           3974.01641
   TB=      688.10465                  0             703.68519
   TDEW=      274.74640         277.17752              277.17752
```

********** INITIAL FLOW COEFFICIENT= .350 (STAGE= 3 ) **********

STAGE TOTAL PRESSURE RATIO= 1.26049
STAGE TOTAL TEMPERATURE RATIO= 1.08331
STAGE ADIABATIC EFFICIENCY= .81684

STAGE FLOW COEFFICIENT= .333
AXIAL VELOCITY= 449.46
ROTOR SPEED=1351.44

| | *ROTOR INLET* | *ROTOR OUTLET* | *STATOR OUTLET* |
|---|---|---|---|
| TOTAL PRESSURE | 3974.0164 | 5101.3211 | 5009.2002 |
| STATIC PRESSURE | 3616.3429 | 4476.3401 | 4707.2567 |
| TOTAL TEMPERATURE(GAS) | 632.7695 | 685.4855 | 685.4855 |
| STATIC TEMPERATURE(GAS) | 615.9983 | 660.4465 | 673.4583 |
| STATIC DENSITY(GAS) | .1100 | .1270 | .1310 |
| STATIC DENSITY(MIXTURE) | .1100 | .1270 | .1310 |
| AXIAL VELOCITY | 449.4604 | 389.4365 | 377.6287 |
| ABSOLUTE VELOCITY | 449.6199 | 549.4712 | 380.8195 |
| RELATIVE VELOCITY | 965.4080 | 562.7624 | |
| BLADE SPEED | 842.4238 | 793.8829 | 771.1864 |
| TANG. COMP. OF ABS. VEL. | -11.9766 | 387.6310 | |
| TANG. COMP. OF REL. VEL. | 854.4004 | 406.2519 | |
| ACOUSTIC SPEED | 1215.9342 | 1271.3542 | 1271.3809 |
| ABSOLUTE MACH NUMBER | .3698 | .4364 | .2995 |
| RELATIVE MACH NUMBER | .7940 | .4470 | |
| FLOW COEFFICIENT | .3326 | .2882 | .4105 |
| FLOW AREA | .4732 | .4730 | .4730 |
| ABSOLUTE FLOW ANGLE | -1.5264 | 44.8669 | 7.4246 |
| RELATIVE FLOW ANGLE | 62.2532 | 46.2107 | |
| INCIDENCE | 6.1832 | 7.6969 | |
| DEVIATION | | 8.4807 | 7.0446 |
| DIFFUSION RATIO | | 2.0791 | 1.8366 |
| MOMENTUM THICKNESS | | .0478 | .0983 |
| OMEGA (GAS) | | .08753 | .14740 |
| OMEGA (TOTAL) | | .08753 | .14740 |

```
********************   INITIAL FLOW COEFFICIENT=  .350 (ISTAGE=  3 )  ********************

    STAGE PERFORMANCE AFTER INTER-STAGE ADJUSTMENT(JPERFM=2)

    STAGE TOTAL PRESSURE RATIO=      1.26049
    STAGE TOTAL TEMPERATURE RATIO=     1.08331
    STAGE ADIABATIC EFFICIENCY=       .81684

           **STAGE INLET**     **STAGE OUTLET**     **STAGE OUTLET**
                                (BEFORE INTER-       (AFTER INTER-
                                 STAGE ADJUST-        STAGE ADJUST-
                                 MENT)                MENT)
    XV=          .00000              .00000               .00000
    XW=               0                   0                    0
    XWW=              0                   0                    0
    XWT=              0                   0                    0
    XAIR=        1.00000             1.00000              1.00000
    XMETAN=           0                   0                    0
    XGAS         1.00000             1.00000              1.00000
    WMASS=            0                   0                    0
    WWMASS=           0                   0                    0
    WTMASS=           0                   0                    0
    AMASS=       23.40301            23.40301             23.40301
    CHMASS=           0                   0                    0
    VMASS=        .00000              .00000               .00000
    GMASS=       23.40301            23.40301             23.40301
    TMASS=       23.40301            23.40301             23.40301
    WS=          .00000              .00000               .00000
    RHOA=         .11771              .12702               .10097
    RHOM=         .06805              .12702               .10097
    RHOG=         .11004              .12702               .10097
    TG=      632.76945           685.48553            685.48553
    TW=      513.70000           513.70000            513.70000
    TWW=      513.70000                0            513.70000
    P=     3974.01641          5101.32106           5009.20024
    TB=      703.68519                0            718.99503
    TDEW=      277.17752         269.96289            269.96289
```

```
*******************   INITIAL FLOW COEFFICIENT=  .350 (STAGE= 4 )  ******************

    STAGE TOTAL PRESSURE RATIO=      1.19662
    STAGE TOTAL TEMPERATURE RATIO=     1.06136
    STAGE ADIABATIC EFFICIENCY=       .85105

    STAGE FLOW COEFFICIENT= .641
    AXIAL VELOCITY= 589.39
    ROTOR SPEED= 919.87
```

| | *ROTOR INLET* | *ROTOR OUTLET* | *STATOR OUTLET* |
|---|---|---|---|
| TOTAL PRESSURE | 5009.2002 | 6024.8334 | 5994.1247 |
| STATIC PRESSURE | 4296.7782 | 4884.1440 | 5185.4606 |
| TOTAL TEMPERATURE(GAS) | 685.4855 | 727.5442 | 727.5442 |
| STATIC TEMPERATURE(GAS) | 656.2649 | 685.4610 | 698.2213 |
| STATIC DENSITY(GAS) | .1227 | .1336 | .1392 |
| STATIC DENSITY(MIXTURE) | .1227 | .1336 | .1392 |
| AXIAL VELOCITY | 589.3897 | 581.3061 | 589.6111 |
| ABSOLUTE VELOCITY | 594.3731 | 713.4135 | 595.5118 |
| RELATIVE VELOCITY | 910.7935 | 675.7753 | |
| BLADE SPEED | 771.1864 | 758.1814 | 747.9928 |
| TANG. COMP. OF ABS. VEL. | 76.8057 | 413.5722 | |
| TANG. COMP. OF REL. VEL. | 694.3807 | 344.6092 | |
| ACOUSTIC SPEED | 1254.2993 | 1293.9674 | 1293.7731 |
| ABSOLUTE MACH NUMBER | .4739 | .5565 | .4603 |
| RELATIVE MACH NUMBER | .7261 | .5272 | |
| FLOW COEFFICIENT | .6407 | .6319 | .6654 |
| FLOW AREA | .1614 | .1503 | .1422 |
| ABSOLUTE FLOW ANGLE | 7.4246 | 35.4301 | 8.0825 |
| RELATIVE FLOW ANGLE | 49.6754 | 30.6603 | |
| INCIDENCE | .7554 | 8.6501 | |
| DEVIATION | | .9503 | -.7775 |
| DIFFUSION RATIO | | 1.5354 | 1.5344 |
| MOMENTUM THICKNESS | | .0587 | .0140 |
| OMEGA (GAS) | | .08319 | .02692 |
| OMEGA (TOTAL) | | .08319 | .02692 |

```
********************   INITIAL FLOW COEFFICIENT=  .350 (ISTAGE=  4 )  ********************

    STAGE PERFORMANCE AFTER INTER-STAGE ADJUSTMENT(JPERFM=2)

    STAGE TOTAL PRESSURE RATIO=      1.19662
    STAGE TOTAL TEMPERATURE RATIO=     1.06136
    STAGE ADIABATIC EFFICIENCY=      .85105

           **STAGE INLET**     **STAGE OUTLET**     **STAGE OUTLET**
                                (BEFORE INTER-       (AFTER INTER-
                                 STAGE ADJUST-        STAGE ADJUST-
                                 MENT)                MENT)
    XV=          .00000              .00000               .00000
    XW=               0                   0                    0
    XWW=              0                   0                    0
    XWT=              0                   0                    0
    XAIR=        1.00000             1.00000              1.00000
    XMETAN=             0                   0                    0
    XGAS         1.00000             1.00000              1.00000
    WMASS=              0                   0                    0
    WWMASS=             0                   0                    0
    WTMASS=             0                   0                    0
    AMASS=       11.67233            11.67233             11.67233
    CHMASS=             0                   0                    0
    VMASS=          .00000              .00000               .00000
    GMASS=       11.67233            11.67233             11.67233
    TMASS=       11.67233            11.67233             11.67233
    WS=          .00000              .00000               .00000
    RHOA=          .13697              .13353               .13918
    RHOM=          .06805              .13353               .13918
    RHOG=          .12272              .13353               .13918
    TG=      685.48553           727.54417            727.54417
    TW=      513.70000           513.70000            513.70000
    TWW=      513.70000                  0             513.70000
    P=     5009.20024          6024.83343           5994.12468
    TB=      718.99503                  0            729.81122
    TDEW=      269.96289           271.36263            271.36263
```

********** INITIAL FLOW COEFFICIENT= .350 (STAGE= 5 ) **********

STAGE TOTAL PRESSURE RATIO= 1.21939
STAGE TOTAL TEMPERATURE RATIO= 1.06099
STAGE ADIABATIC EFFICIENCY= .94550

STAGE FLOW COEFFICIENT= .666
AXIAL VELOCITY= 589.69
ROTOR SPEED= 886.08

| | *ROTOR INLET* | *ROTOR OUTLET* | *STATOR OUTLET* |
|---|---|---|---|
| TOTAL PRESSURE | 5994.1247 | 7378.6209 | 7309.1765 |
| STATIC PRESSURE | 5185.2528 | 6059.6616 | 6507.5573 |
| TOTAL TEMPERATURE(GAS) | 727.5442 | 771.9195 | 771.9195 |
| STATIC TEMPERATURE(GAS) | 698.2860 | 730.0673 | 746.9501 |
| STATIC DENSITY(GAS) | .1392 | .1556 | .1633 |
| STATIC DENSITY(MIXTURE) | .1392 | .1556 | .1633 |
| AXIAL VELOCITY | 589.6894 | 554.1730 | 550.3157 |
| ABSOLUTE VELOCITY | 595.6058 | 712.4715 | 550.3157 |
| RELATIVE VELOCITY | 898.2358 | 626.9037 | |
| BLADE SPEED | 747.9929 | 740.8691 | 739.3780 |
| TANG. COMP. OF ABS. VEL. | 83.7419 | 447.7811 | |
| TANG. COMP. OF REL. VEL. | 664.2509 | 293.0880 | |
| ACOUSTIC SPEED | 1293.1012 | 1337.3196 | 1337.4010 |
| ABSOLUTE MACH NUMBER | .4606 | .5389 | .4115 |
| RELATIVE MACH NUMBER | .6869 | .4741 | |
| FLOW COEFFICIENT | .6655 | .6254 | .6362 |
| FLOW AREA | .1422 | .1354 | .1299 |
| ABSOLUTE FLOW ANGLE | 8.0825 | 38.9388 | .1833 |
| RELATIVE FLOW ANGLE | 48.4029 | 27.8732 | |
| INCIDENCE | 8.4629 | 8.5588 | |
| DEVIATION | | 1.1132 | -1.2267 |
| DIFFUSION RATIO | | 1.7298 | 1.6313 |
| MOMENTUM THICKNESS | | .0033 | .0305 |
| OMEGA (GAS) | | .00475 | .05265 |
| OMEGA (TOTAL) | | .00475 | .05265 |

```
*******************   INITIAL FLOW COEFFICIENT=  .350 (ISTAGE=  5 )  *******************

    STAGE PERFORMANCE AFTER INTER-STAGE ADJUSTMENT(JPERFM=2)

    STAGE TOTAL PRESSURE RATIO=      1.21939
    STAGE TOTAL TEMPERATURE RATIO=     1.06099
    STAGE ADIABATIC EFFICIENCY=       .94550

          **STAGE INLET**     **STAGE OUTLET**     **STAGE OUTLET**
                                (BEFORE INTER-       (AFTER INTER-
                                 STAGE ADJUST-        STAGE ADJUST-
                                 MENT)                MENT)
    XV=          .00000              .00000               .00000
    XW=               0                   0                    0
    XWW=              0                   0                    0
    XWT=              0                   0                    0
    XAIR=        1.00000             1.00000              1.00000
    XMETAN=               0                   0                    0
    XGAS         1.00000             1.00000              1.00000
    WMASS=               0                   0                    0
    WWMASS=              0                   0                    0
    WTMASS=              0                   0                    0
    AMASS=       11.67233            11.67233             11.67233
    CHMASS=              0                   0                    0
    VMASS=         .00000              .00000               .00000
    GMASS=       11.67233            11.67233             11.67233
    TMASS=       11.67233            11.67233             11.67233
    WS=          .00000              .00000               .00000
    RHOA=         .15442              .15554               .16328
    RHOM=         .06805              .15554               .16328
    RHOG=         .13918              .15554               .16328
    TG=      727.54417           771.91951            771.91951
    TW=      513.70000           513.70000            513.70000
    TWW=      513.70000                   0            513.70000
    P=     5994.12468          7378.62087           7309.17654
    TB=      729.81122                   0            742.14795
    TDEW=      271.36263           273.08753            273.08753
```

```
*******************   INITIAL FLOW COEFFICIENT=  .350 (STAGE= 6 )  ******************

    STAGE TOTAL PRESSURE RATIO=      1.19654
    STAGE TOTAL TEMPERATURE RATIO=     1.05585
    STAGE ADIABATIC EFFICIENCY=      .86607

    STAGE FLOW COEFFICIENT= .636
    AXIAL VELOCITY= 550.38
    ROTOR SPEED= 865.04
```

| | *ROTOR INLET* | *ROTOR OUTLET* | *STATOR OUTLET* |
|---|---|---|---|
| TOTAL PRESSURE | 7309.1765 | 8816.6235 | 8745.7076 |
| STATIC PRESSURE | 6507.4014 | 7587.3587 | 7924.8089 |
| TOTAL TEMPERATURE(GAS) | 771.9195 | 818.1164 | 818.1164 |
| STATIC TEMPERATURE(GAS) | 747.0210 | 784.1867 | 795.6827 |
| STATIC DENSITY(GAS) | .1633 | .1813 | .1867 |
| STATIC DENSITY(MIXTURE) | .1633 | .1813 | .1867 |
| AXIAL VELOCITY | 550.3811 | 514.3482 | 519.2021 |
| ABSOLUTE VELOCITY | 550.3839 | 642.6013 | 522.5194 |
| RELATIVE VELOCITY | 920.3250 | 620.9920 | |
| BLADE SPEED | 739.3780 | 733.1655 | 728.2783 |
| TANG. COMP. OF ABS. VEL. | 1.7611 | 385.2043 | |
| TANG. COMP. OF REL. VEL. | 737.6170 | 347.9612 | |
| ACOUSTIC SPEED | 1336.5625 | 1379.4584 | 1379.4083 |
| ABSOLUTE MACH NUMBER | .4118 | .4693 | .3788 |
| RELATIVE MACH NUMBER | .6886 | .4535 | |
| FLOW COEFFICIENT | .6363 | .5946 | .6130 |
| FLOW AREA | .1293 | .1251 | .1204 |
| ABSOLUTE FLOW ANGLE | .1833 | 36.8302 | 6.4617 |
| RELATIVE FLOW ANGLE | 53.2711 | 34.0787 | |
| INCIDENCE | 7.5811 | 4.1502 | |
| DEVIATION | | 7.4387 | -.0883 |
| DIFFUSION RATIO | | 1.8002 | 1.6048 |
| MOMENTUM THICKNESS | | .0454 | .0294 |
| OMEGA (GAS) | | .06738 | .05769 |
| OMEGA (TOTAL) | | .06738 | .05769 |

```
********************   INITIAL FLOW COEFFICIENT=  .350 (ISTAGE=  6 )  ********************

STAGE PERFORMANCE AFTER INTER-STAGE ADJUSTMENT(JPERFM=2)

STAGE TOTAL PRESSURE RATIO=      1.19654
STAGE TOTAL TEMPERATURE RATIO=     1.05985
STAGE ADIABATIC EFFICIENCY=       .86607

        **STAGE INLET**     **STAGE OUTLET**     **STAGE OUTLET**
                              (BEFORE INTER-       (AFTER INTER-
                               STAGE ADJUST-        STAGE ADJUST-
                               MENT)                MENT)
XV=          .00000              .00000               .00000
XW=               0                   0                    0
XWW=              0                   0                    0
XWT=              0                   0                    0
XAIR=        1.00000             1.00000              1.00000
XMETAN=              0                   0                    0
XGAS         1.00000             1.00000              1.00000
WMASS=               0                   0                    0
WWMASS=              0                   0                    0
WTMASS=              0                   0                    0
AMASS=       11.67233            11.67233             11.67233
CHMASS=              0                   0                    0
VMASS=         .00000              .00000               .00000
GMASS=       11.67233            11.67233             11.67233
TMASS=       11.67233            11.67233             11.67233
WS=          .00000              .00000               .00000
RHOA=         .17748              .18132               .18666
RHOM=         .06805              .18132               .18666
RHOG=         .16328              .18132               .18666
TG=      771.91951           818.11642            818.11642
TW=      513.70000           513.70000            513.70000
TWW=      513.70000                  0             513.70000
P=      7309.17654          8816.62355           8745.70762
TB=      742.14795                  0             753.67291
TDEW=      273.08753           274.62091            274.62091
```

********** INITIAL FLOW COEFFICIENT= .350 (STAGE= 7 ) **********

STAGE TOTAL PRESSURE RATIO= 1.17549
STAGE TOTAL TEMPERATURE RATIO= 1.05078
STAGE ADIABATIC EFFICIENCY= .91379

STAGE FLOW COEFFICIENT= .613
AXIAL VELOCITY= 519.26
ROTOR SPEED= 846.98

| | *ROTOR INLET* | *ROTOR OUTLET* | *STATOR OUTLET* |
|---|---|---|---|
| TOTAL PRESSURE | 8745.7076 | 10348.6746 | 10280.4694 |
| STATIC PRESSURE | 7924.6568 | 8923.0614 | 9380.7059 |
| TOTAL TEMPERATURE(GAS) | 818.1164 | 859.6583 | 859.6583 |
| STATIC TEMPERATURE(GAS) | 795.7587 | 824.5923 | 837.8175 |
| STATIC DENSITY(GAS) | .1867 | .2028 | .2099 |
| STATIC DENSITY(MIXTURE) | .1867 | .2028 | .2099 |
| AXIAL VELOCITY | 519.2616 | 507.7313 | 514.4858 |
| ABSOLUTE VELOCITY | 522.5814 | 654.5692 | 516.5907 |
| RELATIVE VELOCITY | 847.2421 | 592.2380 | |
| BLADE SPEED | 728.2783 | 718.0068 | 713.9479 |
| TANG. COMP. OF ABS. VEL. | 58.8109 | 413.1220 | |
| TANG. COMP. OF REL. VEL. | 669.4674 | 304.8848 | |
| ACOUSTIC SPEED | 1378.4024 | 1414.4220 | 1414.3603 |
| ABSOLUTE MACH NUMBER | .3791 | .4665 | .3652 |
| RELATIVE MACH NUMBER | .6147 | .4221 | |
| FLOW COEFFICIENT | .6131 | .5995 | .6245 |
| FLOW AREA | .1204 | .1133 | .1081 |
| ABSOLUTE FLOW ANGLE | 6.4617 | 39.1340 | 5.1777 |
| RELATIVE FLOW ANGLE | 52.2016 | 30.9842 | |
| INCIDENCE | 9.1916 | 10.7240 | |
| DEVIATION | | 6.2542 | -.0623 |
| DIFFUSION RATIO | | 1.7690 | 1.6550 |
| MOMENTUM THICKNESS | | .0210 | .0254 |
| OMEGA (GAS) | | .03508 | .04784 |
| OMEGA (TOTAL) | | .03508 | .04784 |

```
********************   INITIAL FLOW COEFFICIENT=  .350 (ISTAGE=  7 )  ********************

    STAGE PERFORMANCE AFTER INTER-STAGE ADJUSTMENT(JPERFM=2)

    STAGE TOTAL PRESSURE RATIO=      1.17549
    STAGE TOTAL TEMPERATURE RATIO=      1.05078
    STAGE ADIABATIC EFFICIENCY=       .91379

           **STAGE INLET**     **STAGE OUTLET**     **STAGE OUTLET**
                                (BEFORE INTER-       (AFTER INTER-
                                 STAGE ADJUST-        STAGE ADJUST-
                                 MENT)                MENT)
    XV=          .00000              .00000               .00000
    XW=               0                   0                    0
    XWW=              0                   0                    0
    XWT=              0                   0                    0
    XAIR=        1.00000             1.00000              1.00000
    XMETAN=             0                   0                    0
    XGAS         1.00000             1.00000              1.00000
    WMASS=              0                   0                    0
    WWMASS=             0                   0                    0
    WTMASS=             0                   0                    0
    AMASS=       11.67233            11.67233             11.67233
    CHMASS=             0                   0                    0
    VMASS=         .00000              .00000               .00000
    GMASS=       11.67233            11.67233             11.67233
    TMASS=       11.67233            11.67233             11.67233
    WS=          .00000              .00000               .00000
    RHOA=          .20037              .20279               .20984
    RHOM=          .06805              .20279               .20984
    RHOG=          .18665              .20279               .20984
    TG=      818.11642           859.65826            859.65826
    TW=      513.70000           513.70000            513.70000
    TWW=      513.70000                 0             513.70000
    P=      8745.70762         10348.67456          10280.46937
    TB=      753.67291                  0             761.86427
    TDEW=      274.62091          268.00787            268.00787
```

```
********************   INITIAL FLOW COEFFICIENT=  .350 (STAGE= 8 )  ******************

    STAGE TOTAL PRESSURE RATIO=      1.20089
    STAGE TOTAL TEMPERATURE RATIO=     1.06425
    STAGE ADIABATIC EFFICIENCY=       .81624

    STAGE FLOW COEFFICIENT= .625
    AXIAL VELOCITY= 514.54
    ROTOR SPEED= 823.79
```

| | *ROTOR INLET* | *ROTOR OUTLET* | *STATOR OUTLET* |
|---|---|---|---|
| TOTAL PRESSURE | 10280.4694 | 12568.8515 | 12345.6935 |
| STATIC PRESSURE | 9380.5524 | 10557.9338 | 11281.4781 |
| TOTAL TEMPERATURE(GAS) | 859.6583 | 914.8877 | 914.8877 |
| STATIC TEMPERATURE(GAS) | 837.8900 | 871.3159 | 892.0935 |
| STATIC DENSITY(GAS) | .2098 | .2271 | .2370 |
| STATIC DENSITY(MIXTURE) | .2098 | .2271 | .2370 |
| AXIAL VELOCITY | 514.5387 | 504.5486 | 507.8209 |
| ABSOLUTE VELOCITY | 516.6469 | 731.0673 | 528.7699 |
| RELATIVE VELOCITY | 842.6568 | 533.7524 | |
| BLADE SPEED | 713.9479 | 703.1795 | 701.1086 |
| TANG. COMP. OF ABS. VEL. | 46.6247 | 529.0464 | |
| TANG. COMP. OF REL. VEL. | 667.3233 | 174.1331 | |
| ACOUSTIC SPEED | 1413.3527 | 1458.3792 | 1458.3516 |
| ABSOLUTE MACH NUMBER | .3655 | .5072 | .3626 |
| RELATIVE MACH NUMBER | .5962 | .3703 | |
| FLOW COEFFICIENT | .6246 | .6125 | .6330 |
| FLOW AREA | .1081 | .1019 | .0970 |
| ABSOLUTE FLOW ANGLE | 5.1777 | 46.3577 | 16.1822 |
| RELATIVE FLOW ANGLE | 52.3660 | 19.0409 | |
| INCIDENCE | 10.1360 | 8.6577 | |
| DEVIATION | | 3.7909 | -.0478 |
| DIFFUSION RATIO | | 1.9747 | 1.7700 |
| MOMENTUM THICKNESS | | .0811 | .0743 |
| OMEGA (GAS) | | .09931 | .11097 |
| OMEGA (TOTAL) | | .09931 | .11097 |

```
******************   INITIAL FLOW COEFFICIENT=  .350 (ISTAGE=  8 )  ******************

    STAGE PERFORMANCE AFTER INTER-STAGE ADJUSTMENT(JPERFM=2)

    STAGE TOTAL PRESSURE RATIO=      1.20089
    STAGE TOTAL TEMPERATURE RATIO=     1.06425
    STAGE ADIABATIC EFFICIENCY=       .81624

           **STAGE INLET**     **STAGE OUTLET**     **STAGE OUTLET**
                                (BEFORE INTER-       (AFTER INTER-
                                 STAGE ADJUST-        STAGE ADJUST-
                                 MENT)                MENT)
    XV=          .00000              .00000               .00000
    XW=               0                   0                    0
    XWW=              0                   0                    0
    XWT=              0                   0                    0
    XAIR=        1.00000             1.00000              1.00000
    XMETAN=            0                   0                    0
    XGAS         1.00000             1.00000              1.00000
    WMASS=             0                   0                    0
    WWMASS=            0                   0                    0
    WTMASS=            0                   0                    0
    AMASS=       11.67233            11.67233             11.67233
    CHMASS=            0                   0                    0
    VMASS=         .00000              .00000               .00000
    GMASS=       11.67233            11.67233             11.67233
    TMASS=       11.67233            11.67233             11.67233
    WS=          .00000              .00000               .00000
    RHOA=         .22415              .22704               .23699
    RHOM=         .06805              .22704               .23699
    RHOG=         .20984              .22704               .23699
    TG=      859.65826           914.88771            914.88771
    TW=      513.70000           513.70000            513.70000
    TWW=      513.70000                 0             513.70000
    P=    10280.46937         12568.85149          12345.69354
    TR=      761.86427                 0             774.83081
    TDEW=      268.00787         269.69355            269.69355
```

********** INITIAL FLOW COEFFICIENT= .350 (STAGE= 9 ) **********

STAGE TOTAL PRESSURE RATIO= 1.15536
STAGE TOTAL TEMPERATURE RATIO= 1.04450
STAGE ADIABATIC EFFICIENCY= .91990

STAGE FLOW COEFFICIENT= .633
AXIAL VELOCITY= 507.90
ROTOR SPEED= 802.25

| | *ROTOR INLET* | *ROTOR OUTLET* | *STATOR OUTLET* |
|---|---|---|---|
| TOTAL PRESSURE | 12345.6935 | 14336.6902 | 14263.7226 |
| STATIC PRESSURE | 11281.2350 | 12232.4808 | 13193.2043 |
| TOTAL TEMPERATURE(GAS) | 914.8877 | 955.6015 | 955.6015 |
| STATIC TEMPERATURE(GAS) | 892.2055 | 914.3024 | 935.0742 |
| STATIC DENSITY(GAS) | .2370 | .2508 | .2645 |
| STATIC DENSITY(MIXTURE) | .2370 | .2508 | .2645 |
| AXIAL VELOCITY | 507.8956 | 504.5532 | 478.4400 |
| ABSOLUTE VELOCITY | 528.8486 | 713.7256 | 503.1838 |
| RELATIVE VELOCITY | 751.3761 | 541.7559 | |
| BLADE SPEED | 701.1086 | 702.1027 | 1041.9876 |
| TANG. COMP. OF ABS. VEL. | 147.3867 | 504.8072 | |
| TANG. COMP. OF REL. VEL. | 553.7220 | 197.2955 | |
| ACOUSTIC SPEED | 1456.8748 | 1491.3003 | 1491.4642 |
| ABSOLUTE MACH NUMBER | .3630 | .4839 | .3374 |
| RELATIVE MACH NUMBER | .5157 | .3673 | |
| FLOW COEFFICIENT | .6331 | .6289 | .4070 |
| FLOW AREA | .0970 | .0923 | .0923 |
| ABSOLUTE FLOW ANGLE | 16.1822 | 45.0144 | 18.0493 |
| RELATIVE FLOW ANGLE | 47.4717 | 21.3570 | |
| INCIDENCE | 2.3317 | 8.1944 | |
| DEVIATION | | 5.2970 | 1.5493 |
| DIFFUSION RATIO | | 1.8431 | 1.8616 |
| MOMENTUM THICKNESS | | .0252 | .0200 |
| OMEGA (GAS) | | .04159 | .03468 |
| OMEGA (TOTAL) | | .04159 | .03468 |

```
*******************   INITIAL FLOW COEFFICIENT=  .350 (ISTAGE=  9 )  *******************

    STAGE PERFORMANCE AFTER INTER-STAGE ADJUSTMENT(JPERFM=2)

    STAGE TOTAL PRESSURE RATIO=      1.15536
    STAGE TOTAL TEMPERATURE RATIO=     1.04450
    STAGE ADIABATIC EFFICIENCY=       .91990

          **STAGE INLET**     **STAGE OUTLET**     **STAGE OUTLET**
                                (BEFORE INTER-       (AFTER INTER-
                                 STAGE ADJUST-        STAGE ADJUST-
                                 MENT)                MENT)
    XV=          .00000              .00000               .00000
    XW=               0                   0                    0
    XWW=              0                   0                    0
    XWT=              0                   0                    0
    XAIR=        1.00000             1.00000              1.00000
    XMETAN=             0                   0                    0
    XGAS         1.00000             1.00000              1.00000
    WMASS=              0                   0                    0
    WWMASS=             0                   0                    0
    WTMASS=             0                   0                    0
    AMASS=       11.67233            11.67233             11.67233
    CHMASS=             0                   0                    0
    VMASS=         .00000              .00000               .00000
    GMASS=       11.67233            11.67233             11.67233
    TMASS=       11.67233            11.67233             11.67233
    WS=          .00000              .00000               .00000
    RHOA=         .25293              .25071               .26017
    RHOM=         .06805              .25071               .26017
    RHOG=         .23699              .25071               .26017
    TG=      914.88771           955.60152            955.60152
    TW=      513.70000           513.70000            513.70000
    TWW=      513.70000                  0            513.70000
    P=    12345.69354         14336.69023          14263.72260
    TB=      774.83081                  0            785.37543
    TDEW=      269.69355           270.84699            270.84699
```

********** INITIAL FLOW COEFFICIENT= .350 (STAGE=10 ) **********

STAGE TOTAL PRESSURE RATIO= 1.25604
STAGE TOTAL TEMPERATURE RATIO= 1.07347
STAGE ADIABATIC EFFICIENCY= .88429

STAGE FLOW COEFFICIENT= .461
AXIAL VELOCITY= 542.18
ROTOR SPEED=1175.57

| | *ROTOR INLET* | *ROTOR OUTLET* | *STATOR OUTLET* |
|---|---|---|---|
| TOTAL PRESSURE | 14253.7226 | 18032.6041 | 17915.7526 |
| STATIC PRESSURE | 12899.8540 | 15068.4044 | 16329.5258 |
| TOTAL TEMPERATURE(GAS) | 955.6015 | 1025.8110 | 1025.8110 |
| STATIC TEMPERATURE(GAS) | 929.3445 | 976.0088 | 999.7922 |
| STATIC DENSITY(GAS) | .2602 | .2894 | .3061 |
| STATIC DENSITY(MIXTURE) | .2602 | .2894 | .3061 |
| AXIAL VELOCITY | 542.1761 | 519.0677 | 513.1280 |
| ABSOLUTE VELOCITY | 570.2372 | 785.4702 | 567.7388 |
| RELATIVE VELOCITY | 1021.1334 | 693.8723 | |
| BLADE SPEED | 1041.9876 | 1049.9830 | 1063.0217 |
| TANG. COMP. OF ABS. VEL. | 176.6793 | 589.5185 | |
| TANG. COMP. OF REL. VEL. | 865.3083 | 460.4645 | |
| ACOUSTIC SPEED | 1485.6443 | 1540.8844 | 1540.9245 |
| ABSOLUTE MACH NUMBER | .3838 | .5159 | .3684 |
| RELATIVE MACH NUMBER | .6873 | .4557 | |
| FLOW COEFFICIENT | .4612 | .4415 | .4370 |
| FLOW AREA | .0827 | .0777 | .0743 |
| ABSOLUTE FLOW ANGLE | 18.0493 | 48.6363 | 25.3368 |
| RELATIVE FLOW ANGLE | 57.9300 | 41.5762 | |
| INCIDENCE | 8.4100 | 12.2263 | |
| DEVIATION | | 3.6562 | 2.5568 |
| DIFFUSION RATIO | | 1.9129 | 2.0621 |
| MOMENTUM THICKNESS | | .0503 | .0281 |
| OMEGA (GAS) | | .07877 | .03942 |
| OMEGA (TOTAL) | | .07877 | .03942 |

```
*******************   INITIAL FLOW COEFFICIENT=  .350 (ISTAGE= 10 )  *******************

    STAGE PERFORMANCE AFTER INTER-STAGE ADJUSTMENT(JPERFM=2)

    STAGE TOTAL PRESSURE RATIO=      1.25604
    STAGE TOTAL TEMPERATURE RATIO=     1.07347
    STAGE ADIABATIC EFFICIENCY=       .88429

           **STAGE INLET**     **STAGE OUTLET**     **STAGE OUTLET**
                                (BEFORE INTER-       (AFTER INTER-
                                 STAGE ADJUST-        STAGE ADJUST-
                                 MENT)                MENT)
    XV=          .00000              .00000               .00000
    XW=               0                   0                    0
    XWW=              0                   0                    0
    XWT=              0                   0                    0
    XAIR=        1.00000             1.00000              1.00000
    XMETAN=             0                   0                    0
    XGAS         1.00000             1.00000              1.00000
    WMASS=              0                   0                    0
    WWMASS=             0                   0                    0
    WTMASS=             0                   0                    0
    AMASS=       11.67233            11.67233             11.67233
    CHMASS=             0                   0                    0
    VMASS=         .00000              .00000               .00000
    GMASS=              0                   0             11.67233
    TMASS=       11.67233            11.67233             11.67233
    WS=          .00000              .00000               .00000
    RHOA=         .27977              .28923               .30607
    RHOM=         .06805              .28923               .30607
    RHOG=         .26017              .28923               .30607
    TG=      955.60152           1025.81100           1025.81100
    TW=      513.70000            513.70000            513.70000
    TWW=      513.70000                   0            513.70000
    P=     14263.72260          18032.60411          17915.75259
    TB=      785.37543                   0            802.61749
    TDEW=      270.84699           272.88102            272.88102
```

********** INITIAL FLOW COEFFICIENT= .350 (STAGE=11 ) **********

STAGE TOTAL PRESSURE RATIO= 1.25237
STAGE TOTAL TEMPERATURE RATIO= 1.07175
STAGE ADIABATIC EFFICIENCY= .88590

STAGE FLOW COEFFICIENT= .437
AXIAL VELOCITY= 513.24
ROTOR SPEED=1174.10

| | *ROTOR INLET* | *ROTOR OUTLET* | *STATOR OUTLET* |
|---|---|---|---|
| TOTAL PRESSURE | 17915.7526 | 22640.3524 | 22437.1803 |
| STATIC PRESSURE | 16328.9933 | 18741.6775 | 20760.1544 |
| TOTAL TEMPERATURE(GAS) | 1025.8110 | 1099.4133 | 1099.4133 |
| STATIC TEMPERATURE(GAS) | 999.9774 | 1043.7464 | 1076.1803 |
| STATIC DENSITY(GAS) | .3061 | .3366 | .3616 |
| STATIC DENSITY(MIXTURE) | .3061 | .3366 | .3616 |
| AXIAL VELOCITY | 513.2398 | 493.4343 | 478.3162 |
| ABSOLUTE VELOCITY | 567.8636 | 833.7243 | 538.6128 |
| RELATIVE VELOCITY | 967.3850 | 632.7889 | |
| BLADE SPEED | 1063.0217 | 1068.1879 | 1075.3223 |
| TANG. COMP. OF ABS. VEL. | 243.0102 | 672.0259 | |
| TANG. COMP. OF REL. VEL. | 820.0114 | 396.1620 | |
| ACOUSTIC SPEED | 1538.7427 | 1596.2306 | 1596.2960 |
| ABSOLUTE MACH NUMBER | .3690 | .5303 | .3374 |
| RELATIVE MACH NUMBER | .6287 | .4025 | |
| FLOW COEFFICIENT | .4371 | .4203 | .4074 |
| FLOW AREA | .0743 | .0703 | .0675 |
| ABSOLUTE FLOW ANGLE | 25.3368 | 53.7121 | 27.3717 |
| RELATIVE FLOW ANGLE | 57.9578 | 38.7598 | |
| INCIDENCE | 9.9378 | 12.0921 | |
| DEVIATION | | 5.1698 | 3.0917 |
| DIFFUSION RATIO | | 2.0930 | 2.2918 |
| MOMENTUM THICKNESS | | .0579 | .0406 |
| OMEGA (GAS) | | .07694 | .05211 |
| OMEGA (TOTAL) | | .07694 | .05211 |

```
********************   INITIAL FLOW COEFFICIENT=  .350 (ISTAGE= 11 )  ********************

   STAGE PERFORMANCE AFTER INTER-STAGE ADJUSTMENT(JPERFM=2)

   STAGE TOTAL PRESSURE RATIO=      1.25237
   STAGE TOTAL TEMPERATURE RATIO=     1.07175
   STAGE ADIABATIC EFFICIENCY=       .88590

          **STAGE INLET**     **STAGE OUTLET**     **STAGE OUTLET**
                                (BEFORE INTER-       (AFTER INTER-
                                 STAGE ADJUST-        STAGE ADJUST-
                                 MENT)                MENT)
   XV=          .00000              .00000               .00000
   XW=               0                   0                    0
   XWW=              0                   0                    0
   XWT=              0                   0                    0
   XAIR=             0                   0              1.00000
   XMETAN=           0                   0                    0
   XGAS         1.00000             1.00000              1.00000
   WMASS=            0                   0                    0
   WWMASS=           0                   0                    0
   WTMASS=           0                   0                    0
   AMASS=       11.67233            11.67233             11.67233
   CHMASS=           0                   0                    0
   VMASS=        .00000              .00000               .00000
   GMASS=       11.67233            11.67233             11.67233
   TMASS=       11.67233            11.67233             11.67233
   WS=          .00000              .00000               .00000
   RHOA=         .32735              .33637               .36150
   RHOM=         .06805              .33637               .36150
   RHOG=         .30607              .33637               .36150
   TG=      1025.81100          1099.41328           1099.41328
   TW=       513.70000           513.70000            513.70000
   TWW=      513.70000                   0            513.70000
   P=     17915.75259         22640.35240          22437.18026
   TB=       802.61749                   0            820.39758
   TDEW=             0           274.92943            274.92943
```

```
********************   INITIAL FLOW COEFFICIENT=  .350 (STAGE=12 )  ******************

    STAGE TOTAL PRESSURE RATIO=      1.23130
    STAGE TOTAL TEMPERATURE RATIO=      1.06707
    STAGE ADIABATIC EFFICIENCY=       .86622

    STAGE FLOW COEFFICIENT= .407
    AXIAL VELOCITY= 478.41
    ROTOR SPEED=1174.10
```

| | *ROTOR INLET* | *ROTOR OUTLET* | *STATOR OUTLET* |
|---|---|---|---|
| TOTAL PRESSURE | 22437.1803 | 27930.5652 | 27626.9676 |
| STATIC PRESSURE | 20759.6128 | 23509.9181 | 25763.5860 |
| TOTAL TEMPERATURE(GAS) | 1099.4133 | 1173.1539 | 1173.1539 |
| STATIC TEMPERATURE(GAS) | 1076.3649 | 1119.3351 | 1151.0370 |
| STATIC DENSITY(GAS) | .3615 | .3937 | .4195 |
| STATIC DENSITY(MIXTURE) | .3615 | .3937 | .4195 |
| AXIAL VELOCITY | 478.4108 | 466.6581 | 458.5859 |
| ABSOLUTE VELOCITY | 538.7252 | 823.3543 | 527.8149 |
| RELATIVE VELOCITY | 955.9602 | 613.9485 | |
| BLADE SPEED | 1075.3223 | 1077.2904 | 1081.8416 |
| TANG. COMP. OF ABS. VEL. | 247.6853 | 678.3381 | |
| TANG. COMP. OF REL. VEL. | 827.6370 | 398.9523 | |
| ACOUSTIC SPEED | 1593.8072 | 1648.1415 | 1648.1650 |
| ABSOLUTE MACH NUMBER | .3380 | .5066 | .3202 |
| RELATIVE MACH NUMBER | .5998 | .3777 | |
| FLOW COEFFICIENT | .4075 | .3975 | .3906 |
| FLOW AREA | .0675 | .0635 | .0607 |
| ABSOLUTE FLOW ANGLE | 27.3717 | 55.4742 | 29.6763 |
| RELATIVE FLOW ANGLE | 59.9702 | 40.5276 | |
| INCIDENCE | 11.6302 | 12.8442 | |
| DEVIATION | | 6.6276 | 3.8863 |
| DIFFUSION RATIO | | 2.1810 | 2.3725 |
| MOMENTUM THICKNESS | | .0711 | .0530 |
| OMEGA (GAS) | | .06902 | .06868 |
| OMEGA (TOTAL) | | .03902 | .06868 |

```
********************   INITIAL FLOW COEFFICIENT=  .350 (ISTAGE= 12 )  ********************

    STAGE PERFORMANCE AFTER INTER-STAGE ADJUSTMENT(JPERFM=2)

    STAGE TOTAL PRESSURE RATIO=      1.23130
    STAGE TOTAL TEMPERATURE RATIO=      1.06707
    STAGE ADIABATIC EFFICIENCY=       .86622

           **STAGE INLET**     **STAGE OUTLET**     **STAGE OUTLET**
                                (BEFORE INTER-       (AFTER INTER-
                                 STAGE ADJUST-        STAGE ADJUST-
                                 MENT)                MENT)
    XV=          .00000              .00000               .00000
    XW=               0                   0                    0
    XWW=              0                   0                    0
    XWT=              0                   0                    0
    XAIR=        1.00000             1.00000              1.00000
    XMETAN=               0                   0                    0
    XGAS         1.00000             1.00000              1.00000
    WMASS=                0                   0                    0
    WWMASS=               0                   0                    0
    WTMASS=               0                   0                    0
    AMASS=       11.67233            11.67233             11.67233
    CHMASS=               0                   0                    0
    VMASS=          .00000              .00000               .00000
    GMASS=       11.67233            11.67233             11.67233
    TMASS=       11.67233            11.67233             11.67233
    WS=          .00000              .00000               .00000
    RHOA=         .38252              .39347               .41945
    RHOM=         .06805              .39347               .41945
    RHOG=         .36150              .39347               .41945
    TG=     1099.41328          1173.15394           1173.15394
    TW=      513.70000           513.70000            513.70000
    TWW=      513.70000                   0            513.70000
    P=    22437.18026         27930.56525          27626.96760
    TB=      820.39758                   0            837.55275
    TDEW=     274.92943                   0                    0
```

********** INITIAL FLOW COEFFICIENT= .350 (STAGE=13 ) **********

STAGE TOTAL PRESSURE RATIO= 1.19601
STAGE TOTAL TEMPERATURE RATIO= 1.05853
STAGE ADIABATIC EFFICIENCY= .84287

STAGE FLOW COEFFICIENT= .391
AXIAL VELOCITY= 458.67
ROTOR SPEED=1174.10

| | *ROTOR INLET* | *ROTOR OUTLET* | *STATOR OUTLET* |
|---|---|---|---|
| TOTAL PRESSURE | 27626.9676 | 33500.3482 | 33042.2239 |
| STATIC PRESSURE | 25763.0679 | 28736.5816 | 31067.9866 |
| TOTAL TEMPERATURE(GAS) | 1173.1539 | 1241.8209 | 1241.8209 |
| STATIC TEMPERATURE(GAS) | 1151.2208 | 1191.4240 | 1221.3274 |
| STATIC DENSITY(GAS) | .4195 | .4521 | .4768 |
| STATIC DENSITY(MIXTURE) | .4195 | .4521 | .4768 |
| AXIAL VELOCITY | 458.6683 | 450.7370 | 446.6390 |
| ABSOLUTE VELOCITY | 527.9110 | 800.3580 | 510.3760 |
| RELATIVE VELOCITY | 939.9750 | 620.1988 | |
| BLADE SPEED | 1081.8416 | 1087.3769 | 1094.1423 |
| TANG. COMP. OF ABS. VEL. | 261.3683 | 661.3691 | |
| TANG. COMP. OF REL. VEL. | 820.4733 | 426.0078 | |
| ACOUSTIC SPEED | 1645.5231 | 1694.8805 | 1694.8869 |
| ABSOLUTE MACH NUMBER | .3208 | .4781 | .3011 |
| RELATIVE MACH NUMBER | .5712 | .3705 | |
| FLOW COEFFICIENT | .3907 | .3839 | .3804 |
| FLOW AREA | .0607 | .0573 | .0548 |
| ABSOLUTE FLOW ANGLE | 29.6763 | 55.7247 | 28.9412 |
| RELATIVE FLOW ANGLE | 60.7935 | 43.3844 | |
| INCIDENCE | 13.0135 | 13.7847 | |
| DEVIATION | | 6.9944 | 5.0112 |
| DIFFUSION RATIO | | 2.1805 | 2.5072 |
| MOMENTUM THICKNESS | | .0633 | .0741 |
| OMEGA (GAS) | | .09051 | .09617 |
| OMEGA (TOTAL) | | .09051 | .09617 |

```
********************   INITIAL FLOW COEFFICIENT=  .350 (ISTAGE= 13 )  ********************

    STAGE PERFORMANCE AFTER INTER-STAGE ADJUSTMENT(JPERFM=2)

    STAGE TOTAL PRESSURE RATIO=      1.19601
    STAGE TOTAL TEMPERATURE RATIO=     1.05853
    STAGE ADIABATIC EFFICIENCY=       .84287

            **STAGE INLET**     **STAGE OUTLET**     **STAGE OUTLET**
                                  (BEFORE INTER-       (AFTER INTER-
                                   STAGE ADJUST-        STAGE ADJUST-
                                   MENT)                MENT)
    XV=          .00000              .00000               .00000
    XW=               0                   0                    0
    XWW=              0                   0                    0
    XWT=              0                   0                    0
    XAIR=        1.00000             1.00000              1.00000
    XMETAN=               0                   0                    0
    XGAS         1.00000             1.00000              1.00000
    WMASS=                0                   0                    0
    WWMASS=               0                   0                    0
    WTMASS=               0                   0                    0
    AMASS=       11.67233            11.67233             11.67233
    CHMASS=               0                   0                    0
    VMASS=          .00000              .00000               .00000
    GMASS=       11.67233            11.67233             11.67233
    TMASS=       11.67233            11.67233             11.67233
    WS=          .00000              .00000               .00000
    RHOA=          .44139              .45189               .47672
    RHOM=          .06805              .45189               .47672
    RHOG=          .41945              .45189               .47672
    TG=     1173.15394          1241.82085           1241.82085
    TW=      513.70000           513.70000            513.70000
    TWW=      513.70000                   0            513.70000
    P=    27626.96760         33500.34820          33042.22392
    TB=      837.55275                   0            852.89500
    TDEW=             0           278.52962            278.52962
```

********** INITIAL FLOW COEFFICIENT= .350 (STAGE=14 ) **********

STAGE TOTAL PRESSURE RATIO= 1.20835
STAGE TOTAL TEMPERATURE RATIO= 1.06105
STAGE ADIABATIC EFFICIENCY= .84769

STAGE FLOW COEFFICIENT= .380
AXIAL VELOCITY= 446.70
ROTOR SPEED=1174.10

| | *ROTOR INLET* | *ROTOR OUTLET* | *STATOR OUTLET* |
|---|---|---|---|
| TOTAL PRESSURE | 33042.2239 | 40440.0863 | 39926.4297 |
| STATIC PRESSURE | 31067.5444 | 34810.6428 | 37946.7124 |
| TOTAL TEMPERATURE(GAS) | 1241.8209 | 1317.6382 | 1317.6382 |
| STATIC TEMPERATURE(GAS) | 1221.4893 | 1265.7922 | 1299.8148 |
| STATIC DENSITY(GAS) | .4767 | .5155 | .5472 |
| STATIC DENSITY(MIXTURE) | .4767 | .5155 | .5472 |
| AXIAL VELOCITY | 446.7045 | 435.1859 | 426.7369 |
| ABSOLUTE VELOCITY | 510.4511 | 815.2649 | 478.0087 |
| RELATIVE VELOCITY | 957.6915 | 596.2404 | |
| BLADE SPEED | 1094.1423 | 1096.9714 | 1101.6457 |
| TANG. COMP. OF ABS. VEL. | 247.0130 | 689.3984 | |
| TANG. COMP. OF REL. VEL. | 847.1293 | 407.5731 | |
| ACOUSTIC SPEED | 1692.3317 | 1745.7425 | 1745.7474 |
| ABSOLUTE MACH NUMBER | .3016 | .4732 | .2738 |
| RELATIVE MACH NUMBER | .5659 | .3461 | |
| FLOW COEFFICIENT | .3805 | .3707 | .3635 |
| FLOW AREA | .0548 | .0520 | .0500 |
| ABSOLUTE FLOW ANGLE | 28.9412 | 57.7376 | 26.7806 |
| RELATIVE FLOW ANGLE | 62.1966 | 43.1234 | |
| INCIDENCE | 12.1766 | 13.7076 | |
| DEVIATION | | 6.2034 | 5.8806 |
| DIFFUSION RATIO | | 2.3230 | 2.7547 |
| MOMENTUM THICKNESS | | .0787 | .0794 |
| OMEGA (GAS) | | .09938 | .09124 |
| OMEGA (TOTAL) | | .09938 | .09124 |

```
********************   INITIAL FLOW COEFFICIENT=  .350 (ISTAGE= 14 )  ********************

    STAGE PERFORMANCE AFTER INTER-STAGE ADJUSTMENT(JPERFM=2)

    STAGE TOTAL PRESSURE RATIO=      1.20835
    STAGE TOTAL TEMPERATURE RATIO=     1.06105
    STAGE ADIABATIC EFFICIENCY=       .84769

           **STAGE INLET**     **STAGE OUTLET**     **STAGE OUTLET**
                                (BEFORE INTER-       (AFTER INTER-
                                 STAGE ADJUST-        STAGE ADJUST-
                                 MENT)                MENT)
    XV=          .00000              .00000               .00000
    XW=               0                   0                    0
    XWW=              0                   0                    0
    XWT=              0                   0                    0
    XAIR=        1.00000             1.00000              1.00000
    XMETAN=               0                   0                    0
    XGAS              0                   0              1.00000
    WMASS=              0                   0                    0
    WWMASS=               0                   0                    0
    WTMASS=               0                   0                    0
    AMASS=       11.67233            11.67233             11.67233
    CHMASS=               0                   0                    0
    VMASS=         .00000              .00000               .00000
    GMASS=       11.67233            11.67233             11.67233
    TMASS=       11.67233            11.67233             11.67233
    WS=          .00000              .00000               .00000
    RHOA=         .49872              .51523               .54712
    RHOM=         .06805              .51523               .54712
    RHOG=         .47672              .51523               .54712
    TG=     1241.82085          1317.63819           1317.63819
    TW=      513.70000           513.70000            513.70000
    TWW=      513.70000                   0            513.70000
    P=    33042.22392         40440.08626          39926.42968
    TB=      852.89500                   0            869.73992
    TDEW=      278.52962           280.29321            280.29321
```

********** INITIAL FLOW COEFFICIENT= .350 (STAGE=15 ) **********

STAGE TOTAL PRESSURE RATIO= 1.16446
STAGE TOTAL TEMPERATURE RATIO= 1.05096
STAGE ADIABATIC EFFICIENCY= .80561

STAGE FLOW COEFFICIENT= .364
AXIAL VELOCITY= 426.79
ROTOR SPEED=1174.10

| | *ROTOR INLET* | *ROTOR OUTLET* | *STATOR OUTLET* |
|---|---|---|---|
| TOTAL PRESSURE | 39926.4297 | 47283.7933 | 46492.7712 |
| STATIC PRESSURE | 37946.3135 | 42119.2447 | 44527.4672 |
| TOTAL TEMPERATURE(GAS) | 1317.6382 | 1384.7899 | 1384.7899 |
| STATIC TEMPERATURE(GAS) | 1289.9723 | 1342.9465 | 1369.0145 |
| STATIC DENSITY(GAS) | .5471 | .5879 | .6096 |
| STATIC DENSITY(MIXTURE) | .5471 | .5879 | .6096 |
| AXIAL VELOCITY | 426.7931 | 413.0504 | 410.7180 |
| ABSOLUTE VELOCITY | 478.0720 | 735.8883 | 451.8444 |
| RELATIVE VELOCITY | 983.6514 | 643.9989 | |
| BLADE SPEED | 1101.6457 | 1103.1218 | 1106.0739 |
| TANG. COMP. OF ABS. VEL. | 215.4077 | 609.0327 | |
| TANG. COMP. OF REL. VEL. | 886.2380 | 494.0890 | |
| ACOUSTIC SPEED | 1742.8492 | 1788.5335 | 1788.5323 |
| ABSOLUTE MACH NUMBER | .2743 | .4154 | .2526 |
| RELATIVE MACH NUMBER | .5644 | .3635 | |
| FLOW COEFFICIENT | .3635 | .3518 | .3498 |
| FLOW AREA | .0500 | .0481 | .0466 |
| ABSOLUTE FLOW ANGLE | 26.7806 | 55.8546 | 24.6351 |
| RELATIVE FLOW ANGLE | 64.2855 | 50.1049 | |
| INCIDENCE | 10.1255 | 17.0146 | |
| DEVIATION | | 5.0049 | 7.7651 |
| DIFFUSION RATIO | | 2.1681 | 2.9009 |
| MOMENTUM THICKNESS | | .0612 | .1196 |
| OMEGA (GAS) | | .09491 | .15316 |
| OMEGA (TOTAL) | | .09491 | .15316 |

```
********************   INITIAL FLOW COEFFICIENT=  .350 (ISTAGE= 15 )  ********************

    STAGE PERFORMANCE AFTER INTER-STAGE ADJUSTMENT(JPERFM=2)

    STAGE TOTAL PRESSURE RATIO=      1.16446
    STAGE TOTAL TEMPERATURE RATIO=     1.05096
    STAGE ADIABATIC EFFICIENCY=       .80561

           **STAGE INLET**     **STAGE OUTLET**     **STAGE OUTLET**
                                (BEFORE INTER-       (AFTER INTER-
                                 STAGE ADJUST-        STAGE ADJUST-
                                 MENT)                MENT)
    XV=          .00000              .00000               .00000
    XW=               0                   0                    0
    XWW=              0                   0                    0
    XWT=              0                   0                    0
    XAIR=        1.00000             1.00000              1.00000
    XMETAN=             0                   0                    0
    XGAS         1.00000             1.00000              1.00000
    WMASS=              0                   0                    0
    WWMASS=             0                   0                    0
    WTMASS=             0                   0                    0
    AMASS=       11.67233            11.67233             11.67233
    CHMASS=             0                   0                    0
    VMASS=         .00000              .00000               .00000
    GMASS=       11.67233            11.67233             11.67233
    TMASS=       11.67233            11.67233             11.67233
    WS=          .00000              .00000               .00000
    RHOA=         .56795              .58769               .60957
    RHOM=         .06805              .58769               .60957
    RHOG=         .54712              .58769               .60957
    TG=     1317.63819          1384.78992           1384.78992
    TW=      513.70000           513.70000            513.70000
    TWW=      513.70000                 0            513.70000
    P=    33926.42968         47283.79333          46492.77117
    TB=      869.73992                 0            883.78289
    TDEW=      280.29321          281.77485            281.77485
```

********** INITIAL FLOW COEFFICIENT= .350 (STAGE=16 ) **********

STAGE TOTAL PRESSURE RATIO= 1.16948
STAGE TOTAL TEMPERATURE RATIO= 1.05362
STAGE ADIABATIC EFFICIENCY= .78082

STAGE FLOW COEFFICIENT= .350
AXIAL VELOCITY= 410.76
ROTOR SPEED=1174.10

| | *ROTOR INLET* | *ROTOR OUTLET* | *STATOR OUTLET* |
|---|---|---|---|
| TOTAL PRESSURE | 46492.7712 | 55815.5588 | 54372.1431 |
| STATIC PRESSURE | 44527.1812 | 50016.5613 | 52788.5105 |
| TOTAL TEMPERATURE(GAS) | 1384.7899 | 1459.0445 | 1459.0445 |
| STATIC TEMPERATURE(GAS) | 1369.1368 | 1417.5392 | 1447.7427 |
| STATIC DENSITY(GAS) | .6096 | .6613 | .6834 |
| STATIC DENSITY(MIXTURE) | .6096 | .6613 | .6834 |
| AXIAL VELOCITY | 410.7573 | 386.7880 | 374.2861 |
| ABSOLUTE VELOCITY | 451.8876 | 735.9604 | 384.0394 |
| RELATIVE VELOCITY | 1005.4420 | 616.7886 | |
| BLADE SPEED | 1106.0739 | 1106.5659 | I |
| TANG. COMP. OF ABS. VEL. | 188.3636 | 626.1252 | |
| TANG. COMP. OF REL. VEL. | 917.7103 | 480.4407 | |
| ACOUSTIC SPEED | 1785.9457 | 1836.5226 | 1836.4983 |
| ABSOLUTE MACH NUMBER | .2530 | .4050 | .2091 |
| RELATIVE MACH NUMBER | .5630 | .3394 | |
| FLOW COEFFICIENT | .3498 | .3294 | .3188 |
| FLOW AREA | .0466 | .0456 | .0456 |
| ABSOLUTE FLOW ANGLE | 24.6351 | 58.2944 | 12.9369 |
| RELATIVE FLOW ANGLE | 65.8872 | 51.1635 | |
| INCIDENCE | 9.5472 | 17.8944 | |
| DEVIATION | | 5.7635 | 9.9069 |
| DIFFUSION RATIO | | 2.2586 | 3.4054 |
| MOMENTUM THICKNESS | | .0605 | .1899 |
| OMEGA (GAS) | | .08267 | .24891 |
| OMEGA (TOTAL) | | .08267 | .24891 |

```
*******************   INITIAL FLOW COEFFICIENT=  .350 (ISTAGE= 16 )  *******************

    STAGE PERFORMANCE AFTER INTER-STAGE ADJUSTMENT(JPERFM=2)

    STAGE TOTAL PRESSURE RATIO=      1.16948
    STAGE TOTAL TEMPERATURE RATIO=     1.05362
    STAGE ADIABATIC EFFICIENCY=       .78082

           **STAGE INLET**     **STAGE OUTLET**     **STAGE OUTLET**
                                (BEFORE INTER-       (AFTER INTER-
                                 STAGE ADJUST-        STAGE ADJUST-
                                 MENT)                MENT)
    XU=          .00000              .00000               .00000
    XW=               0                   0                    0
    XWW=              0                   0                    0
    XWT=              0                   0                    0
    XAIR=        1.00000             1.00000              1.00000
    XMETAN=             0                   0                    0
    XGAS         1.00000             1.00000              1.00000
    WMASS=              0                   0                    0
    WWMASS=             0                   0                    0
    WTMASS=             0                   0                    0
    AMASS=       11.67233            11.67233             11.67233
    CHMASS=             0                   0                    0
    UMASS=         .00000              .00000               .00000
    GMASS=       11.67233            11.67233             11.67233
    TMASS=              0                   0             11.67233
    WS=          .00000              .00000               .00000
    RHOA=         .62928              .66115               .68338
    RHOM=         .06805              .66115               .68338
    RHOG=         .60957              .66115               .68338
    TG=      1384.78992          1459.04452           1459.04452
    TW=       513.70000           513.70000            513.70000
    TWW=      513.70000                   0            513.70000
    P=     46492.77117         55815.55880          54372.14309
    TB=       883.78289                   0            898.70299
    TDEW=     281.77485           283.36412            283.36412
```

********** OVERALL PERFORMANCE *********

INITIAL FLOW COEFFICIENT= .350

CORRECTED SPEED= 9492.1 1.000 FRACTION OF DEIGN CORRECTED SPEED

INITIAL WATER CONTENT(SMALL DROPLET)= 0
INITIAL WATER CONTENT(LARGE DROPLET)= 0
INITIAL WATER CONTENT(TOTAL)= 0
INITIAL RELATIVE HUMIDITY= .0 PER CENT
INITIAL METHANE CONTENT= 0

COMPRESSOR INLET TOTAL TEMPERATURE= 518.70

COMPRESSOR INLET TOTAL PRESSURE= 2116.80

CORRECTED MASS FLOW RATE OF MIXTURE=232.089

CORRECTED MASS FLOW RATE OF GAS PHASE 232.089

OVERALL TOTAL PRESSURE RATIO=25.6860

OVERALL TOTAL TEMPERATURE RATIO=2.8129

OVERALL ADIABATIC EFFICIENCY= .7890

********** PERFORMANCE OF FAN,LPC,HPC **********

| | GAS PHASE CORRECTED MASS FLOW | STAGNATION PRESSURE RATIO | STAGNATION TEMPERATURE RATIO | ADIABATIC EFFICIENCY |
|---|---|---|---|---|
| FAN | 232.0886 | 2.3664 | 1.3215 | .8265 |
| LPC | 56.2331 | 2.8475 | 1.3941 | .8412 |
| HPC | 23.3167 | 3.8119 | 1.5268 | .8392 |

TEST CASE NO. 2

(1.0% Small Droplet Ingestion, Detail Printout)

********** INPUT DATA **********

NS(NUMBER OF STAGE)=16
PERFORMANCE AT MEAN

LARGE DROPLETS IN ROTOR FREE STREAM ARE NOT CENTRIFUGED

| | 1 | 2 | 3 | 4 | 5 | 6 | 7 | 8 | 9 | 10 | 11 | 12 | 13 | 14 | 15 | 16 | |
|---|---|---|---|---|---|---|---|---|---|---|---|---|---|---|---|---|---|
| RRHUB(I) | 6.300 | 6.830 | 7.020 | 7.025 | 7.017 | 7.037 | 7.025 | 7.025 | 7.025 | 7.308 | 7.553 | 7.757 | 7.956 | 8.123 | 8.258 | 8.351 | |
| RC(I) | 3.708 | 2.786 | 2.360 | 1.189 | 1.084 | 1.339 | 1.530 | 1.483 | 1.419 | 1.627 | 1.389 | 1.338 | 1.292 | 1.211 | 1.289 | 1.481 | |
| RBLADE(I) | 60.00 | 60.00 | 60.00 | 60.00 | 60.00 | 60.00 | 60.00 | 60.00 | 60.00 | 60.00 | 60.00 | 60.00 | 60.00 | 60.00 | 60.00 | 60.00 | |
| STAGER(I) | 46.64 | 48.99 | 46.90 | 37.82 | 33.35 | 34.67 | 33.67 | 28.74 | 25.60 | 43.72 | 40.81 | 41.12 | 42.09 | 43.47 | 49.63 | 50.91 | |
| STAGES(I) | 21.64 | 17.46 | 13.78 | 17.82 | 13.90 | 19.62 | 16.63 | 26.97 | 26.66 | 29.60 | 32.95 | 34.21 | 32.94 | 32.47 | 27.86 | 21.72 | |
| SRHUB(I) | 6.650 | 6.965 | 7.025 | 7.025 | 7.025 | 7.025 | 7.025 | 7.025 | 7.130 | 7.449 | 7.674 | 7.873 | 8.053 | 8.201 | 8.311 | 8.378 | 6.220 |
| SC(I) | 1.920 | 1.813 | 1.560 | 1.378 | .814 | 1.115 | .981 | .976 | 2.663 | 1.015 | .962 | .877 | .937 | .895 | .880 | 1.211 | |
| SBLADE(I) | 60.00 | 60.00 | 60.00 | 60.00 | 60.00 | 60.00 | 60.00 | 60.00 | 60.00 | 60.00 | 60.00 | 60.00 | 60.00 | 60.00 | 60.00 | 60.00 | |
| SIGUMR(I) | 1.357 | 1.357 | 1.401 | 1.078 | 1.128 | 1.179 | 1.398 | 1.387 | 1.457 | 1.162 | 1.120 | 1.098 | 1.152 | 1.129 | 1.087 | 1.009 | |
| SIGUMS(I) | 1.299 | 1.274 | 1.456 | 1.405 | 1.427 | 1.504 | 1.544 | 1.389 | 1.489 | 1.185 | 1.284 | 1.322 | 1.372 | 1.434 | 1.527 | 2.197 | |
| BET2SS(I) | 6.21 | -1.49 | .38 | 8.86 | 1.41 | 6.55 | 5.24 | 16.23 | 16.50 | 22.78 | 24.28 | 25.79 | 23.93 | 20.90 | 16.87 | 3.03 | 6.69 |
| GAPR(I) | .637 | .612 | .607 | .453 | .373 | .339 | .300 | .300 | .300 | .300 | .300 | .300 | .300 | .300 | .300 | .300 | |
| GAPS(I) | .900 | .760 | 2.395 | .641 | .390 | .300 | .300 | .300 | .300 | .300 | .300 | .300 | .300 | .300 | .300 | .300 | |
| RRTIP(I) | 18.29 | 17.09 | 16.32 | 11.11 | 10.70 | 10.44 | 10.23 | 9.94 | 9.69 | 9.56 | 9.55 | 9.55 | 9.55 | 9.55 | 9.55 | 9.55 | |
| SRTIP(I) | 17.53 | 16.70 | 16.32 | 10.88 | 10.56 | 10.33 | 10.06 | 9.80 | 9.65 | 9.55 | 9.55 | 9.55 | 9.55 | 9.55 | 9.55 | 9.55 | 18.33 |
| RT(I) | 18.29 | 17.09 | 16.32 | 11.11 | 10.70 | 10.70 | 10.44 | 10.23 | 9.94 | 9.69 | 9.56 | 9.55 | 9.55 | 9.55 | 9.55 | 9.55 | |
| RM(I) | 10.60 | 10.51 | 10.17 | 9.31 | 9.03 | 8.93 | 8.79 | 8.62 | 8.46 | 8.47 | 8.64 | 8.74 | 8.80 | 8.89 | 8.96 | 8.99 | |
| RH(I) | 6.30 | 6.83 | 7.02 | 7.03 | 7.02 | 7.04 | 7.03 | 7.03 | 7.03 | 7.31 | 7.55 | 7.76 | 7.96 | 8.12 | 8.26 | 8.35 | |
| ST(I) | 17.53 | 16.70 | 16.32 | 10.88 | 10.56 | 10.33 | 10.07 | 9.80 | 9.65 | 9.55 | 9.55 | 9.55 | 9.55 | 9.55 | 9.55 | 9.55 | |
| SM(I) | 10.51 | 10.39 | 9.58 | 9.15 | 8.94 | 8.85 | 8.67 | 8.49 | 8.48 | 8.54 | 8.68 | 8.76 | 8.84 | 8.92 | 8.97 | 9.00 | |
| SH(I) | 6.65 | 6.97 | 7.03 | 7.03 | 7.03 | 7.03 | 7.03 | 7.03 | 7.13 | 7.45 | 7.67 | 7.87 | 8.05 | 8.20 | 8.31 | 8.38 | |
| BLOCK(I) | 1.000 | 1.000 | 1.000 | 1.000 | 1.000 | 1.000 | 1.000 | 1.000 | 1.000 | 1.000 | 1.000 | 1.000 | 1.000 | 1.000 | 1.000 | 1.000 | |
| BLOCKS(I) | 1.000 | 1.000 | 1.000 | 1.000 | 1.000 | 1.000 | 1.000 | 1.000 | 1.000 | 1.000 | 1.000 | 1.000 | 1.000 | 1.000 | 1.000 | 1.000 | 1.000 |
| BET1MR(I) | 52.88 | 55.61 | 56.07 | 48.92 | 39.94 | 45.69 | 43.01 | 42.23 | 45.14 | 49.52 | 48.02 | 48.34 | 47.78 | 50.02 | 54.16 | 56.34 | |
| BET2MR(I) | 40.40 | 42.36 | 37.73 | 29.71 | 26.76 | 26.64 | 24.73 | 15.25 | 16.06 | 37.92 | 33.59 | 33.90 | 36.39 | 36.92 | 45.10 | 45.40 | |
| BET1MS(I) | 37.07 | 36.40 | 37.17 | 26.78 | 30.38 | 32.68 | 28.41 | 37.70 | 36.82 | 36.41 | 41.62 | 42.63 | 41.94 | 44.03 | 38.84 | 40.40 | 0 |
| BET2MS(I) | 6.21 | -1.49 | .38 | 8.86 | 1.41 | 6.55 | 5.24 | 16.23 | 16.50 | 22.78 | 24.28 | 25.79 | 23.93 | 20.90 | 16.87 | 3.03 | 6.69 |
| PR12D(I) | 1.343 | 1.300 | 1.305 | 1.227 | 1.201 | 1.174 | 1.163 | 1.209 | 1.141 | 1.199 | 1.207 | 1.191 | 1.157 | 1.180 | 1.134 | 1.166 | |
| PR13D(I) | 1.335 | 1.293 | 1.301 | 1.223 | 1.194 | 1.161 | 1.152 | 1.177 | 1.134 | 1.192 | 1.197 | 1.180 | 1.145 | 1.173 | 1.129 | 1.159 | |
| ETARD(I) | .933 | .933 | .991 | .885 | .999 | .879 | .950 | .867 | .950 | .910 | .934 | .924 | .937 | .928 | .929 | .934 | |

```
***************************** INPUT DATA *****************************

FNF(FRACTION OF DESIGN CORRECTED SPEED)=1.000

XDIN(INITIAL WATER CONTENT OF SMALL DROPLET)= .010
XDDIN(INITIAL WATER CONTENT OF LARGE DROPLET)=    0
RHUMID(INITIAL RELATIVE HUMIDITY)=   .00 PER CENT
XCH4(INITIAL METHANE CONTENT)=    0

TOG(COMPRESSOR INLET TOTAL TEMPRATURE OF GAS)= 518.70
TOW(COMPRESSOR INLET TEMPERATURE OF DROPLRET)= 513.70
PO(COMPRESSOR INLET TOTAL PRESSURE)=2116.80

DIN(INITIIL DROPLET DIAMETER OF SMALL DROPLET)=  20.0
DDIN(INITIAL DROPLET DIAMETER OF LARGE DROPLET)= 600.0

FND(DESIGN ROTATIONAL SPEED)= 9492.1

DSMASS(DESIGN MASS FLOW RATE)=   25.5000

BYPASS RATIO =     1.0050

COMPRESSOR INLET TOTAL TEMPERATURE(GAS PHASE) 518.70 R

COMPRESSOR INLET TOTAL PRESSURE=2116.80 LB/FT**2

PREB(PERCENT OF WATER THAT REBOUND AFTER IMPINGEMENT)= 50.0 PERCENT

ROTOR SPEED= 9492.1 RPM

CORRECTED ROTOR SPEED=  9492.1 RPM(  100.0PER CENT OF DESIGN CORRECTED SPEED)
```

```
*************** DESIGN POINT INFORMATION ************ ***

 ***** COMPRESSOR INLET *****

 TOTAL TEMPERATURE AT COMPRESSOR INLET= 518.70000
 TOTAL PRESSURE AT COMPRESSOR INLET=   2116.80
 STATIC TEMPERATURE AT COMPRESSOR INLET= 489.23241
 STATIC PRESSURE AT COMPRESSOR INLET=   1725.23
 STATIC DENSITY AT COMPRESSOR INLET=    .06610

 ACOUSTIC SPEED AT COMPRESSOR INLET=1084.47473
 AXIAL VELOCITY AT COMPRESSOR INLET= 594.81337
 MACH NUMBER AT COMPRESSOR INLET=    .54848
 STREAMTUBE AREA AT COMPRESSOR INLET=    .64861
 FLOW COEFFICIENT AT COMPRESSOR INLET=    .39261
```

At this point the program would again output the design point information for stages 1 through 16. In order to conserve space, this part is omitted, and the reader is referred to pages 185 - 201.

********** INITIAL FLOW COEFFICIENT= .350 (STAGE= 1 ) **********

STAGE TOTAL PRESSURE RATIO= 1.38859
STAGE TOTAL TEMPERATURE RATIO= 1.10969
STAGE ADIABATIC EFFICIENCY= .89654

STAGE FLOW COEFFICIENT= .350
AXIAL VELOCITY= 530.30
ROTOR SPEED=1515.04

| | *ROTOR INLET* | *ROTOR OUTLET* | *STATOR OUTLET* |
|---|---|---|---|
| TOTAL PRESSURE | 2116.8000 | 2963.4889 | 2939.3674 |
| STATIC PRESSURE | 1793.6677 | 2322.7007 | 2575.6199 |
| TOTAL TEMPERATURE(GAS) | 518.7000 | 575.5954 | 575.5954 |
| STATIC TEMPERATURE(GAS) | 494.7052 | 537.2341 | 554.4704 |
| STATIC DENSITY(GAS) | .0680 | .0810 | .0871 |
| STATIC DENSITY(MIXTURE) | .0686 | .0819 | .0879 |
| AXIAL VELOCITY | 530.3018 | 502.5744 | 501.4220 |
| ABSOLUTE VELOCITY | 534.0594 | 678.7781 | 503.7088 |
| RELATIVE VELOCITY | 972.1734 | 651.3535 | |
| BLADE SPEED | 878.0425 | 870.5874 | 870.5874 |
| TANG. COMP. OF ABS. VEL. | 63.2412 | 456.2442 | |
| TANG. COMP. OF REL. VEL. | 814.8013 | 414.3433 | |
| ACOUSTIC SPEED | 1085.0692 | 1148.7209 | 1148.7468 |
| ABSOLUTE MACH NUMBER | .4922 | .6003 | .4385 |
| RELATIVE MACH NUMBER | .8960 | .5760 | |
| FLOW COEFFICIENT | .3500 | .3317 | .3542 |
| FLOW AREA | .6486 | .5739 | .5354 |
| ABSOLUTE FLOW ANGLE | 6.8007 | 42.2336 | 5.4621 |
| RELATIVE FLOW ANGLE | 56.9425 | 39.5036 | |
| INCIDENCE | 4.0625 | 5.1636 | |
| DEVIATION | | -.8964 | -.7479 |
| DIFFUSION RATIO | | 1.7868 | 1.7458 |
| MOMENTUM THICKNESS | | .0347 | .0225 |
| OMEGA (GAS) | | .06104 | .03247 |
| OMEGA (TOTAL) | | .06641 | .03764 |

```
********************   INITIAL FLOW COEFFICIENT=  .350 (ISTAGE=  1 )  ********************

    STAGE PERFORMANCE AFTER INTER-STAGE ADJUSTMENT(JPERFM=2)

    STAGE TOTAL PRESSURE RATIO=      1.38859
    STAGE TOTAL TEMPERATURE RATIO=     1.10968
    STAGE ADIABATIC EFFICIENCY=       .89656

           **STAGE INLET**     **STAGE OUTLET**     **STAGE OUTLET**
                                (BEFORE INTER-       (AFTER INTER-
                                 STAGE ADJUST-        STAGE ADJUST-
                                 MENT)                MENT)
    XV=          .00000              .00000               .00009
    XW=          .01000              .01000               .00991
    XWW=              0                   0                    0
    XWT=         .01000              .01000               .00991
    XAIR=        .99000              .99000               .99000
    XMETAN=           0                   0                    0
    XGAS         .99000              .99000               .99009
    WMASS=        .23611              .23611               .23406
    WWMASS=           0                   0                    0
    WTMASS=       .23611              .23611               .23406
    AMASS=      23.37452            23.37452             23.37452
    CHMASS=           0                   0                    0
    VMASS=        .00000              .00000               .00205
    GMASS=      23.37452            23.37452             23.37656
    TMASS=      23.61062            23.61062             23.61062
    WS=          .00000              .00000               .00009
    RHOA=         .07649              .08110               .07925
    RHOM=         .06865              .08191               .08796
    RHOG=         .06796              .08110               .08709
    TG=       518.70000           575.59544            575.59326
    TW=       513.70000           521.31958            521.37095
    TWW=      513.70000                   0            513.70000
    P=       2116.80000          2963.48895           2939.36745
    TB=       671.40656                   0            687.85162
    TDEW=     271.99506           274.72208            413.95332
```

********** INITIAL FLOW COEFFICIENT= .350 (STAGE= 2 ) **********

STAGE TOTAL PRESSURE RATIO= 1.34080
STAGE TOTAL TEMPERATURE RATIO= 1.09864
STAGE ADIABATIC EFFICIENCY= .88422

STAGE FLOW COEFFICIENT= .354
AXIAL VELOCITY= 501.32
ROTOR SPEED=1415.64

| | *ROTOR INLET* | *ROTOR OUTLET* | *STATOR OUTLET* |
|---|---|---|---|
| TOTAL PRESSURE | 2939.3674 | 3960.6534 | 3941.0927 |
| STATIC PRESSURE | 2575.6881 | 3262.7022 | 3576.6373 |
| TOTAL TEMPERATURE(GAS) | 575.5933 | 632.3722 | 632.3722 |
| STATIC TEMPERATURE(GAS) | 554.2925 | 598.6532 | 615.2651 |
| STATIC DENSITY(GAS) | .0871 | .1021 | .1090 |
| STATIC DENSITY(MIXTURE) | .0880 | .1032 | .1100 |
| AXIAL VELOCITY | 501.3185 | 455.3373 | 453.4281 |
| ABSOLUTE VELOCITY | 503.6051 | 636.8834 | 453.6386 |
| RELATIVE VELOCITY | 953.3660 | 616.3188 | |
| BLADE SPEED | 870.5874 | 860.6473 | 842.4238 |
| TANG. COMP. OF ABS. VEL. | 47.9369 | 445.2959 | |
| TANG. COMP. OF REL. VEL. | 822.6505 | 415.3514 | |
| ACOUSTIC SPEED | 1148.2949 | 1209.7844 | 1209.8071 |
| ABSOLUTE MACH NUMBER | .4386 | .5337 | .3750 |
| RELATIVE MACH NUMBER | .8390 | .5165 | |
| FLOW COEFFICIENT | .3541 | .3216 | .3355 |
| FLOW AREA | .5354 | .5026 | .4732 |
| ABSOLUTE FLOW ANGLE | 5.4621 | 44.3612 | -1.7478 |
| RELATIVE FLOW ANGLE | 58.6421 | 42.3706 | |
| INCIDENCE | 3.0321 | 7.9612 | |
| DEVIATION | | .0106 | -.2578 |
| DIFFUSION RATIO | | 1.9013 | 1.8643 |
| MOMENTUM THICKNESS | | .0423 | .0180 |
| OMEGA (GAS) | | .07715 | .02344 |
| OMEGA (TOTAL) | | .08279 | .02803 |

```
********************   INITIAL FLOW COEFFICIENT=  .350 (ISTAGE=  2 )  ********************

    STAGE PERFORMANCE AFTER INTER-STAGE ADJUSTMENT(JPERFM=2)

    STAGE TOTAL PRESSURE RATIO=      1.34080
    STAGE TOTAL TEMPERATURE RATIO=      1.09864
    STAGE ADIABATIC EFFICIENCY=       .88427

            **STAGE INLET**     **STAGE OUTLET**     **STAGE OUTLET**
                                  (BEFORE INTER-       (AFTER INTER-
                                   STAGE ADJUST-        STAGE ADJUST-
                                   MENT)                MENT)
    XU=          .00009              .00009               .00030
    XW=          .00991              .00991               .00970
    XWW=              0                   0                    0
    XWT=         .00991              .00991               .00970
    XAIR=        .99000              .99000               .99000
    XMETAN=           0                   0                    0
    XGAS         .99009              .99009               .99030
    WMASS=        .23406              .23406               .22897
    WWMASS=           0                   0                    0
    WTMASS=       .23406              .23406               .22897
    AMASS=      23.37452            23.37452             23.37452
    CHMASS=           0                   0                    0
    UMASS=        .00205              .00205               .00714
    GMASS=      23.37656            23.37656             23.38165
    TMASS=      23.61062            23.61062             23.61062
    WS=          .00009              .00009               .00031
    RHOA=        .09572              .10220               .10165
    RHOM=        .06865              .10322               .11003
    RHOG=        .08709              .10220               .10896
    TG=       575.59326           632.37216            632.36701
    TW=       521.37095           530.16119            530.28344
    TWW=      513.70000                 0              513.70000
    P=       2939.36745          3960.65335           3941.09266
    TB=       687.85162                 0              703.23864
    TDEW=     413.95332           419.57136            444.74623
```

********** INITIAL FLOW COEFFICIENT= .350 (STAGE= 3 ) **********

STAGE TOTAL PRESSURE RATIO= 1.25863
STAGE TOTAL TEMPERATURE RATIO= 1.08322
STAGE ADIABATIC EFFICIENCY= .81227

STAGE FLOW COEFFICIENT= .336
AXIAL VELOCITY= 453.49
ROTOR SPEED=1351.44

| | *ROTOR INLET* | *ROTOR OUTLET* | *STATOR OUTLET* |
|---|---|---|---|
| TOTAL PRESSURE | 3941.0927 | 5052.1100 | 4960.3923 |
| STATIC PRESSURE | 3576.5694 | 4425.1846 | 4652.8906 |
| TOTAL TEMPERATURE(GAS) | 632.3670 | 684.9953 | 684.9953 |
| STATIC TEMPERATURE(GAS) | 615.1273 | 659.8735 | 672.7450 |
| STATIC DENSITY(GAS) | .1090 | .1257 | .1296 |
| STATIC DENSITY(MIXTURE) | .1100 | .1269 | .1309 |
| AXIAL VELOCITY | 453.4937 | 393.3181 | 381.3665 |
| ABSOLUTE VELOCITY | 453.7047 | 550.4457 | 384.3807 |
| RELATIVE VELOCITY | 968.9383 | 567.2865 | |
| BLADE SPEED | 842.4238 | 793.8829 | 771.1864 |
| TANG. COMP. OF ABS. VEL. | -13.8384 | 385.0861 | |
| TANG. COMP. OF REL. VEL. | 856.2622 | 408.7969 | |
| ACOUSTIC SPEED | 1209.2869 | 1264.6281 | 1264.6584 |
| ABSOLUTE MACH NUMBER | .3752 | .4395 | .3039 |
| RELATIVE MACH NUMBER | .8012 | .4529 | |
| FLOW COEFFICIENT | .3356 | .2910 | .4146 |
| FLOW AREA | .4732 | .4730 | .4730 |
| ABSOLUTE FLOW ANGLE | -1.7478 | 44.3941 | 7.1827 |
| RELATIVE FLOW ANGLE | 62.0934 | 46.1055 | |
| INCIDENCE | 6.0234 | 7.2241 | |
| DEVIATION | | 8.3755 | 6.8027 |
| DIFFUSION RATIO | | 2.0616 | 1.7988 |
| MOMENTUM THICKNESS | | .0454 | .0925 |
| OMEGA (GAS) | | .08370 | .14084 |
| OMEGA (TOTAL) | | .08935 | .14630 |

```
********************   INITIAL FLOW COEFFICIENT=  .350 (ISTAGE=  3 )  ********************

    STAGE PERFORMANCE AFTER INTER-STAGE ADJUSTMENT(JPERFM=2)

    STAGE TOTAL PRESSURE RATIO=      1.25863
    STAGE TOTAL TEMPERATURE RATIO=     1.08321
    STAGE ADIABATIC EFFICIENCY=       .81235

           **STAGE INLET**     **STAGE OUTLET**     **STAGE OUTLET**
                                (BEFORE INTER-       (AFTER INTER-
                                 STAGE ADJUST-        STAGE ADJUST-
                                 MENT)                MENT)
    XV=          .00030              .00030               .00066
    XW=          .00970              .00970               .00934
    XWW=              0                   0                    0
    XWT=         .00970              .00970               .00934
    XAIR=        .99000              .99000               .99000
    XMETAN=           0                   0                    0
    XGAS         .99030              .99030               .99066
    WMASS=        .22897              .22897               .22063
    WWMASS=           0                   0                    0
    WTMASS=       .22897              .22897               .22063
    AMASS=      23.37452            23.37452             23.37452
    CHMASS=           0                   0                    0
    VMASS=        .00714              .00714               .01547
    GMASS=      23.38165            23.38165             23.38999
    TMASS=      23.61062            23.61062             23.61062
    WS=          .00031              .00031               .00066
    RHOA=         .11681              .12573               .10361
    RHOM=         .06865              .12694               .11968
    RHOG=         .10896              .12571               .11856
    TG=       632.36701           684.99527            684.98735
    TW=       530.28344           536.74693            536.93993
    TWW=       513.70000                 0             513.70000
    P=      3941.09266          5052.10998           4960.39231
    TB=       703.23864                 0             718.41424
    TDEW=      444.74623           441.53377             459.10895
```

********** INITIAL FLOW COEFFICIENT= .350 (STAGE= 4 ) **********

STAGE TOTAL PRESSURE RATIO= 1.17985
STAGE TOTAL TEMPERATURE RATIO= 1.06061
STAGE ADIABATIC EFFICIENCY= .79214

STAGE FLOW COEFFICIENT= .649
AXIAL VELOCITY= 597.02
ROTOR SPEED= 919.87

| | *ROTOR INLET* | *ROTOR OUTLET* | *STATOR OUTLET* |
|---|---|---|---|
| TOTAL PRESSURE | 4960.3923 | 5915.8244 | 5852.5316 |
| STATIC PRESSURE | 4231.6744 | 4764.0483 | 5010.2461 |
| TOTAL TEMPERATURE(GAS) | 684.9874 | 726.5016 | 726.5016 |
| STATIC TEMPERATURE(GAS) | 654.7733 | 683.5756 | 695.4355 |
| STATIC DENSITY(GAS) | .1211 | .1306 | .1350 |
| STATIC DENSITY(MIXTURE) | .1222 | .1318 | .1363 |
| AXIAL VELOCITY | 597.0157 | 594.2406 | 607.7142 |
| ABSOLUTE VELOCITY | 601.7378 | 720.7186 | 613.1243 |
| RELATIVE VELOCITY | 916.9367 | 689.8393 | |
| BLADE SPEED | 771.1864 | 758.1814 | 747.9928 |
| TANG. COMP. OF ABS. VEL. | 75.2373 | 407.8154 | |
| TANG. COMP. OF REL. VEL. | 695.9491 | 350.3661 | |
| ACOUSTIC SPEED | 1247.2434 | 1285.7753 | 1285.3897 |
| ABSOLUTE MACH NUMBER | .4825 | .5655 | .4770 |
| RELATIVE MACH NUMBER | .7352 | .5413 | |
| FLOW COEFFICIENT | .6490 | .6460 | .6858 |
| FLOW AREA | .1614 | .1503 | .1422 |
| ABSOLUTE FLOW ANGLE | 7.1827 | 34.4610 | 7.6483 |
| RELATIVE FLOW ANGLE | 49.3756 | 30.5237 | |
| INCIDENCE | .4556 | 7.6810 | |
| DEVIATION | | .8137 | -1.2117 |
| DIFFUSION RATIO | | 1.5068 | 1.4665 |
| MOMENTUM THICKNESS | | .0671 | .0246 |
| OMEGA (GAS) | | .09592 | .04828 |
| OMEGA (TOTAL) | | .10081 | .05495 |

```
********************   INITIAL FLOW COEFFICIENT=  .350 (ISTAGE=  4 )  ********************

STAGE PERFORMANCE AFTER INTER-STAGE ADJUSTMENT(JPERFM=2)

STAGE TOTAL PRESSURE RATIO=      1.17985
STAGE TOTAL TEMPERATURE RATIO=      1.06060
STAGE ADIABATIC EFFICIENCY=       .79220

        **STAGE INLET**     **STAGE OUTLET**     **STAGE OUTLET**
                              (BEFORE INTER-       (AFTER INTER-
                               STAGE ADJUST-        STAGE ADJUST-
                               MENT)                MENT)
XV=          .00066               .00066               .00086
XW=          .00934               .00934               .00914
XWW=              0                    0                    0
XWT=         .00934               .00934               .00914
XAIR=        .99000               .99000               .99000
XMETAN=           0                    0                    0
XGAS         .99066               .99066               .99086
WMASS=        .11004               .11004               .10759
WWMASS=           0                    0                    0
WTMASS=       .11004               .11004               .10759
AMASS=      11.65811             11.65811             11.65811
CHMASS=           0                    0                    0
VMASS=        .00772               .00772               .01017
GMASS=      11.66583             11.66583             11.66828
TMASS=      11.77587             11.77587             11.77587
WS=          .00066               .00066               .00087
RHOA=         .13573               .13069               .12076
RHOM=         .06855               .13187               .13624
RHOG=         .12109               .13064               .13500
TG=       684.98735            726.50156            726.49720
TW=       536.93993            544.82405            544.93474
TWW=      513.70000                    0            513.70000
P=      4960.39231           5915.82441           5852.53159
TB=       718.41424                    0            728.35202
TDEW=     459.10895            463.41245            470.03573
```

********** INITIAL FLOW COEFFICIENT= .350 (STAGE= 5 ) **********

STAGE TOTAL PRESSURE RATIO= 1.20554
STAGE TOTAL TEMPERATURE RATIO= 1.06053
STAGE ADIABATIC EFFICIENCY= .89626

STAGE FLOW COEFFICIENT= .686
AXIAL VELOCITY= 607.76
ROTOR SPEED= 886.08

| | *ROTOR INLET* | *ROTOR OUTLET* | *STATOR OUTLET* |
|---|---|---|---|
| TOTAL PRESSURE | 5852.5316 | 7187.5968 | 7055.4687 |
| STATIC PRESSURE | 5009.9874 | 5855.3853 | 6207.9745 |
| TOTAL TEMPERATURE(GAS) | 726.4972 | 770.4732 | 770.4732 |
| STATIC TEMPERATURE(GAS) | 695.2200 | 727.4180 | 743.3088 |
| STATIC DENSITY(GAS) | .1350 | .1508 | .1565 |
| STATIC DENSITY(MIXTURE) | .1362 | .1522 | .1579 |
| AXIAL VELOCITY | 607.7622 | 571.5426 | 574.1788 |
| ABSOLUTE VELOCITY | 613.2175 | 722.8373 | 574.1925 |
| RELATIVE VELOCITY | 901.9067 | 644.6847 | |
| BLADE SPEED | 747.9928 | 740.8691 | 739.3780 |
| TANG. COMP. OF ABS. VEL. | 81.6139 | 442.6116 | |
| TANG. COMP. OF REL. VEL. | 666.3789 | 298.2574 | |
| ACOUSTIC SPEED | 1284.6769 | 1328.4398 | 1328.3680 |
| ABSOLUTE MACH NUMBER | .4773 | .5501 | .4323 |
| RELATIVE MACH NUMBER | .7020 | .4906 | |
| FLOW COEFFICIENT | .6859 | .6450 | .6638 |
| FLOW AREA | .1422 | .1354 | .1299 |
| ABSOLUTE FLOW ANGLE | 7.6483 | 37.7548 | -.4174 |
| RELATIVE FLOW ANGLE | 47.6340 | 27.5576 | |
| INCIDENCE | 7.6940 | 7.3748 | |
| DEVIATION | | .7976 | -1.8274 |
| DIFFUSION RATIO | | 1.6750 | 1.5374 |
| MOMENTUM THICKNESS | | .0017 | .0519 |
| OMEGA (GAS) | | .00244 | .09259 |
| OMEGA (TOTAL) | | .00750 | .09918 |

```
********************   INITIAL FLOW COEFFICIENT=  .350 (ISTAGE=  5 )  ********************

    STAGE PERFORMANCE AFTER INTER-STAGE ADJUSTMENT(JPERFM=2)

    STAGE TOTAL PRESSURE RATIO=      1.20554
    STAGE TOTAL TEMPERATURE RATIO=     1.06053
    STAGE ADIABATIC EFFICIENCY=       .89631

          **STAGE INLET**     **STAGE OUTLET**     **STAGE OUTLET**
                                (BEFORE INTER-       (AFTER INTER-
                                 STAGE ADJUST-        STAGE ADJUST-
                                 MENT)                MENT)
    XV=          .00086              .00086               .00106
    XW=          .00914              .00914               .00894
    XWW=              0                   0                    0
    XWT=         .00914              .00914               .00894
    XAIR=         .99000              .99000               .99000
    XMETAN=            0                   0                    0
    XGAS         .99086              .99086               .99106
    WMASS=         .10759              .10759               .10525
    WWMASS=            0                   0                    0
    WTMASS=        .10759              .10759               .10525
    AMASS=       11.65811            11.65811             11.65811
    CHMASS=            0                   0                    0
    VMASS=         .01017              .01017               .01251
    GMASS=       11.66828            11.66828             11.67062
    TMASS=       11.77587            11.77587             11.77587
    WS=          .00087              .00087               .00107
    RHOA=         .15099              .15093               .14273
    RHOM=         .06865              .15224               .15788
    RHOG=         .13500              .15085               .15647
    TG=      726.49720           770.47316            770.46923
    TW=      544.93474           553.16879            553.27132
    TWW=      513.70000                 0             513.70000
    P=     5852.53159          7187.59676           7055.46868
    TB=      728.35202                 0             739.92026
    TDEW=      470.03573         475.30736             480.23426
```

********** INITIAL FLOW COEFFICIENT= .350 (STAGE= 6 ) **********

STAGE TOTAL PRESSURE RATIO= 1.18814
STAGE TOTAL TEMPERATURE RATIO= 1.05936
STAGE ADIABATIC EFFICIENCY= .83795

STAGE FLOW COEFFICIENT= .664
AXIAL VELOCITY= 574.25
ROTOR SPEED= 865.04

| | *ROTOR INLET* | *ROTOR OUTLET* | *STATOR OUTLET* |
|---|---|---|---|
| TOTAL PRESSURE | 7055.4687 | 8483.2978 | 8382.8980 |
| STATIC PRESSURE | 6207.8032 | 7244.4473 | 7512.3139 |
| TOTAL TEMPERATURE(GAS) | 770.4692 | 816.2033 | 816.2033 |
| STATIC TEMPERATURE(GAS) | 743.1425 | 780.9621 | 791.5621 |
| STATIC DENSITY(GAS) | .1565 | .1738 | .1778 |
| STATIC DENSITY(MIXTURE) | .1579 | .1753 | .1794 |
| AXIAL VELOCITY | 574.2506 | 536.7638 | 545.1638 |
| ABSOLUTE VELOCITY | 574.2659 | 655.1738 | 547.8504 |
| RELATIVE VELOCITY | 939.4932 | 644.9105 | |
| BLADE SPEED | 739.3780 | 733.1655 | 728.2783 |
| TANG. COMP. OF ABS. VEL. | -4.1834 | 375.6824 | |
| TANG. COMP. OF REL. VEL. | 743.5614 | 357.4831 | |
| ACOUSTIC SPEED | 1327.5334 | 1370.2288 | 1370.1024 |
| ABSOLUTE MACH NUMBER | .4326 | .4814 | .3999 |
| RELATIVE MACH NUMBER | .7077 | .4739 | |
| FLOW COEFFICIENT | .6638 | .6205 | .6437 |
| FLOW AREA | .1299 | .1251 | .1204 |
| ABSOLUTE FLOW ANGLE | -.4174 | 34.9883 | 5.6849 |
| RELATIVE FLOW ANGLE | 52.3212 | 33.6635 | |
| INCIDENCE | 6.6312 | 2.3083 | |
| DEVIATION | | 7.0235 | -.8651 |
| DIFFUSION RATIO | | 1.7283 | 1.4834 |
| MOMENTUM THICKNESS | | .0427 | .0361 |
| OMEGA (GAS) | | .06517 | .07403 |
| OMEGA (TOTAL) | | .07004 | .08104 |

```
******************   INITIAL FLOW COEFFICIENT=  .350 (ISTAGE=  6 )  ******************

    STAGE PERFORMANCE AFTER INTER-STAGE ADJUSTMENT(JPERFM=2)

    STAGE TOTAL PRESSURE RATIO=      1.18814
    STAGE TOTAL TEMPERATURE RATIO=     1.05935
    STAGE ADIABATIC EFFICIENCY=       .83802

          **STAGE INLET**     **STAGE OUTLET**     **STAGE OUTLET**
                                (BEFORE INTER-       (AFTER INTER-
                                 STAGE ADJUST-        STAGE ADJUST-
                                 MENT)                MENT)
    XU=          .00106              .00106               .00139
    XW=          .00894              .00894               .00861
    XWW=              0                   0                    0
    XWT=         .00894              .00894               .00861
    XAIR=         .99000              .99000               .99000
    XMETAN=            0                   0                    0
    XGAS         .99106              .99106               .99139
    WMASS=        .10525              .10525               .10136
    WWMASS=            0                   0                    0
    WTMASS=       .10525              .10525               .10136
    AMASS=       11.65811            11.65811             11.65811
    CHMASS=            0                   0                    0
    VMASS=        .01251              .01251               .01640
    GMASS=       11.67062            11.67062             11.67451
    TMASS=       11.77587            11.77587             11.77587
    WS=          .00107              .00107               .00141
    RHOA=         .17164              .17391               .16427
    RHOM=         .06865              .17536               .17929
    RHOG=         .15647              .17380               .17775
    TG=       770.46923           816.20331            816.19706
    TW=       553.27132           560.23663            560.40405
    TWW=       513.70000                 0             513.70000
    P=      7055.48868          8483.29781           8382.89797
    TB=       739.92026                 0             750.91936
    TDEW=      480.23426           485.16514            492.25926
```

********** INITIAL FLOW COEFFICIENT= .350 (STAGE= 7 ) **********

STAGE TOTAL PRESSURE RATIO= 1.16834
STAGE TOTAL TEMPERATURE RATIO= 1.05032
STAGE ADIABATIC EFFICIENCY= .88637

STAGE FLOW COEFFICIENT= .644
AXIAL VELOCITY= 545.39
ROTOR SPEED= 846.98

| | *ROTOR INLET* | *ROTOR OUTLET* | *STATOR OUTLET* |
|---|---|---|---|
| TOTAL PRESSURE | 8392.8980 | 9898.1373 | 9794.0340 |
| STATIC PRESSURE | 7511.8546 | 8460.5242 | 8832.8928 |
| TOTAL TEMPERATURE(GAS) | 816.1971 | 857.2672 | 857.2672 |
| STATIC TEMPERATURE(GAS) | 791.4182 | 820.5982 | 832.9542 |
| STATIC DENSITY(GAS) | .1778 | .1931 | .1986 |
| STATIC DENSITY(MIXTURE) | .1793 | .1948 | .2003 |
| AXIAL VELOCITY | 545.3897 | 533.4645 | 543.8031 |
| ABSOLUTE VELOCITY | 548.0853 | 669.7228 | 545.3371 |
| RELATIVE VELOCITY | 857.0107 | 618.5630 | |
| BLADE SPEED | 728.2783 | 718.0068 | 713.9479 |
| TANG. COMP. OF ABS. VEL. | 54.2919 | 404.9002 | |
| TANG. COMP. OF REL. VEL. | 673.9864 | 313.1066 | |
| ACOUSTIC SPEED | 1369.2681 | 1404.8882 | 1404.7433 |
| ABSOLUTE MACH NUMBER | .4003 | .4803 | .3882 |
| RELATIVE MACH NUMBER | .6332 | .4436 | |
| FLOW COEFFICIENT | .6439 | .6298 | .6601 |
| FLOW AREA | .1204 | .1133 | .1081 |
| ABSOLUTE FLOW ANGLE | 5.6849 | 37.1985 | 4.3143 |
| RELATIVE FLOW ANGLE | 51.0202 | 30.4100 | |
| INCIDENCE | 8.0102 | 8.7885 | |
| DEVIATION | | 5.6800 | -.9257 |
| DIFFUSION RATIO | | 1.6809 | 1.5201 |
| MOMENTUM THICKNESS | | .0178 | .0332 |
| OMEGA (GAS) | | .03071 | .06560 |
| OMEGA (TOTAL) | | .03600 | .07241 |

```
********************   INITIAL FLOW COEFFICIENT=  .350 (ISTAGE=  7 )  ********************

    STAGE PERFORMANCE AFTER INTER-STAGE ADJUSTMENT(JPERFM=2)

    STAGE TOTAL PRESSURE RATIO=      1.16834
    STAGE TOTAL TEMPERATURE RATIO=      1.05031
    STAGE ADIABATIC EFFICIENCY=       .88648

            **STAGE INLET**     **STAGE OUTLET**     **STAGE OUTLET**
                                  (BEFORE INTER-       (AFTER INTER-
                                   STAGE ADJUST-        STAGE ADJUST-
                                   MENT)                MENT)
    XV=          .00139              .00139               .00179
    XW=          .00861              .00861               .00821
    XWW=              0                   0                    0
    XWT=         .00861              .00861               .00821
    XAIR=        .99000              .99000               .99000
    XMETAN=           0                   0                    0
    XGAS         .99139              .99139               .99179
    WMASS=        .10136              .10136               .09665
    WWMASS=           0                   0                    0
    WTMASS=       .10136              .10136               .09665
    AMASS=      11.65811            11.65811             11.65811
    CHMASS=           0                   0                    0
    VMASS=        .01640              .01640               .02111
    GMASS=      11.67451            11.67451             11.67923
    TMASS=      11.77587            11.77587             11.77587
    WS=          .00141              .00141               .00181
    RHOA=         .19251              .19329               .18432
    RHOM=         .06865              .19480               .20020
    RHOG=         .17775              .19313               .19856
    TG=       816.19706           857.26715            857.25995
    TW=       560.40405           566.27814            566.47941
    TWW=      513.70000                 0             513.70000
    P=       8382.89797          9898.13726           9794.03401
    TB=       750.91936                 0             758.50323
    TDEW=      492.25926           488.21208            495.21127
```

********** INITIAL FLOW COEFFICIENT= .350 (STAGE= 8 ) **********

STAGE TOTAL PRESSURE RATIO= 1.19433
STAGE TOTAL TEMPERATURE RATIO= 1.06479
STAGE ADIABATIC EFFICIENCY= .78429

STAGE FLOW COEFFICIENT= .660
AXIAL VELOCITY= 544.10
ROTOR SPEED= 823.79

| | *ROTOR INLET* | *ROTOR OUTLET* | *STATOR OUTLET* |
|---|---|---|---|
| TOTAL PRESSURE | 9794.0340 | 11971.7421 | 11697.3285 |
| STATIC PRESSURE | 8832.2419 | 9945.2950 | 10559.2522 |
| TOTAL TEMPERATURE(GAS) | 857.2600 | 912.8051 | 912.8051 |
| STATIC TEMPERATURE(GAS) | 832.8133 | 867.0049 | 887.2369 |
| STATIC DENSITY(GAS) | .1986 | .2148 | .2228 |
| STATIC DENSITY(MIXTURE) | .2002 | .2165 | .2247 |
| AXIAL VELOCITY | 544.1029 | 533.8952 | 540.5290 |
| ABSOLUTE VELOCITY | 545.6491 | 750.0474 | 560.4086 |
| RELATIVE VELOCITY | 865.3566 | 562.2729 | |
| BLADE SPEED | 713.9479 | 703.1795 | 701.1086 |
| TANG. COMP. OF ABS. VEL. | 41.0483 | 526.8084 | |
| TANG. COMP. OF REL. VEL. | 672.8997 | 176.3711 | |
| ACOUSTIC SPEED | 1404.0006 | 1449.2436 | 1449.1529 |
| ABSOLUTE MACH NUMBER | .3886 | .5236 | .3867 |
| RELATIVE MACH NUMBER | .6164 | .3925 | |
| FLOW COEFFICIENT | .6605 | .6481 | .6738 |
| FLOW AREA | .1081 | .1019 | .0970 |
| ABSOLUTE FLOW ANGLE | 4.3143 | 44.6172 | 15.3086 |
| RELATIVE FLOW ANGLE | 51.0412 | 18.2809 | |
| INCIDENCE | 8.8112 | 6.9172 | |
| DEVIATION | | 3.0309 | -.9214 |
| DIFFUSION RATIO | | 1.8585 | 1.6335 |
| MOMENTUM THICKNESS | | .0773 | .0830 |
| OMEGA (GAS) | | .09906 | .13021 |
| OMEGA (TOTAL) | | .10296 | .13542 |

```
********************   INITIAL FLOW COEFFICIENT=  .350 (ISTAGE=  8 )  ********************

    STAGE PERFORMANCE AFTER INTER-STAGE ADJUSTMENT(JPERFM=2)

    STAGE TOTAL PRESSURE RATIO=      1.19433
    STAGE TOTAL TEMPERATURE RATIO=      1.06478
    STAGE ADIABATIC EFFICIENCY=       .78435

           **STAGE INLET**     **STAGE OUTLET**     **STAGE OUTLET**
                                (BEFORE INTER-       (AFTER INTER-
                                 STAGE ADJUST-        STAGE ADJUST-
                                 MENT)                MENT)
    XV=          .00179              .00179               .00227
    XW=          .00821              .00821               .00773
    XWW=              0                   0                    0
    XWT=         .00821              .00821               .00773
    XAIR=        .99000              .99000               .99000
    XMETAN=           0                   0                    0
    XGAS         .99179              .99179               .99227
    WMASS=        .09665              .09665               .09102
    WWMASS=           0                   0                    0
    WTMASS=       .09665              .09665               .09102
    AMASS=       11.65811            11.65811             11.65811
    CHMASS=           0                   0                    0
    VMASS=        .02111              .02111               .02674
    GMASS=       11.67923            11.67923             11.68486
    TMASS=       11.77587            11.77587             11.77587
    WS=          .00181              .00181               .00229
    RHOA=         .21414              .21503               .20689
    RHOM=         .06865              .21657               .22449
    RHOG=         .19856              .21480               .22276
    TG=      857.25995           912.80515            912.79698
    TW=      566.47941           573.29128            573.53202
    TWW=      513.70000                 0             513.70000
    P=     9794.03401         11971.74213          11697.32848
    TB=      758.50323                 0            770.96403
    TDEW=      495.21127         501.19053            507.67596
```

********** INITIAL FLOW COEFFICIENT= .350 (STAGE= 9 ) **********

STAGE TOTAL PRESSURE RATIO= 1.15314
STAGE TOTAL TEMPERATURE RATIO= 1.04406
STAGE ADIABATIC EFFICIENCY= .91622

STAGE FLOW COEFFICIENT= .674
AXIAL VELOCITY= 540.94
ROTOR SPEED= 802.25

| | *ROTOR INLET* | *ROTOR OUTLET* | *STATOR OUTLET* |
|---|---|---|---|
| TOTAL PRESSURE | 11697.3285 | 13562.4981 | 13488.7085 |
| STATIC PRESSURE | 10558.2369 | 11438.2002 | 12345.8699 |
| TOTAL TEMPERATURE(GAS) | 912.7970 | 953.0108 | 953.0108 |
| STATIC TEMPERATURE(GAS) | 887.1377 | 909.2209 | 929.9980 |
| STATIC DENSITY(GAS) | .2228 | .2355 | .2485 |
| STATIC DENSITY(MIXTURE) | .2245 | .2373 | .2504 |
| AXIAL VELOCITY | 540.9379 | 537.9299 | 509.7709 |
| ABSOLUTE VELOCITY | 550.8377 | 735.6089 | 533.2668 |
| RELATIVE VELOCITY | 773.6048 | 574.0298 | |
| BLADE SPEED | 701.1086 | 702.1027 | 1041.9876 |
| TANG. COMP. OF ABS. VEL. | 148.0712 | 501.7488 | |
| TANG. COMP. OF REL. VEL. | 553.0375 | 200.3538 | |
| ACOUSTIC SPEED | 1448.0275 | 1482.3597 | 1482.5966 |
| ABSOLUTE MACH NUMBER | .3873 | .5018 | .3597 |
| RELATIVE MACH NUMBER | .5342 | .3916 | |
| FLOW COEFFICIENT | .6743 | .6705 | .4336 |
| FLOW AREA | .0970 | .0923 | .0923 |
| ABSOLUTE FLOW ANGLE | 15.3086 | 43.0069 | 17.0804 |
| RELATIVE FLOW ANGLE | 45.6337 | 20.4280 | |
| INCIDENCE | .4937 | 6.1869 | |
| DEVIATION | | 4.3680 | .5804 |
| DIFFUSION RATIO | | 1.6979 | 1.7102 |
| MOMENTUM THICKNESS | | .0199 | .0164 |
| OMEGA (GAS) | | .03440 | .02985 |
| OMEGA (TOTAL) | | .03966 | .03474 |

```
********************   INITIAL FLOW COEFFICIENT=  .350 (ISTAGE=  9 )  ********************

    STAGE PERFORMANCE AFTER INTER-STAGE ADJUSTMENT(JPERFM=2)

    STAGE TOTAL PRESSURE RATIO=      1.15314
    STAGE TOTAL TEMPERATURE RATIO=     1.04405
    STAGE ADIABATIC EFFICIENCY=       .91628

          **STAGE INLET**     **STAGE OUTLET**     **STAGE OUTLET**
                                (BEFORE INTER-       (AFTER INTER-
                                 STAGE ADJUST-        STAGE ADJUST-
                                 MENT)                MENT)
    XU=          .00227              .00227               .00323
    XW=          .00773              .00773                    0
    XWW=              0                   0                    0
    XWT=         .00773              .00773                    0
    XAIR=         .99000              .99000               .99677
    XMETAN=            0                   0                    0
    XGAS         .99227              .99227              1.00000
    WMASS=        .09102              .09102                    0
    WWMASS=            0                   0                    0
    WTMASS=       .09102              .09102                    0
    AMASS=      11.65843            11.65843             11.65843
    CHMASS=            0                   0                    0
    VMASS=        .02674              .02674               .03775
    GMASS=      11.68486            11.68486             11.69618
    TMASS=      11.77587            11.77587             11.69618
    WS=          .00229              .00229               .00324
    RHOA=         .24019              .23584               .22455
    RHOM=         .06865              .23734               .24383
    RHOG=         .22276              .23551               .24383
    TG=       912.79698           953.01083            953.00241
    TW=       573.53202           579.35901            579.85191
    TWW=      513.70000                   0            513.70000
    P=      11697.32848         13562.49810          13488.70848
    TB=       770.96403                   0            781.26234
    TDEW=     507.67596           512.29293            523.15571
```

********** INITIAL FLOW COEFFICIENT= .350 (STAGE=10 ) **********

STAGE TOTAL PRESSURE RATIO= 1.25133
STAGE TOTAL TEMPERATURE RATIO= 1.07043
STAGE ADIABATIC EFFICIENCY= .90632

STAGE FLOW COEFFICIENT= .493
AXIAL VELOCITY= 579.69
ROTOR SPEED=1175.57

| | *ROTOR INLET* | *ROTOR OUTLET* | *STATOR OUTLET* |
|---|---|---|---|
| TOTAL PRESSURE | 13488.7085 | 16955.7969 | 16878.8813 |
| STATIC PRESSURE | 12035.8382 | 14079.4285 | 15214.1927 |
| TOTAL TEMPERATURE(GAS) | 953.0024 | 1020.1251 | 1020.1251 |
| STATIC TEMPERATURE(GAS) | 923.3843 | 968.9355 | 991.2079 |
| STATIC DENSITY(GAS) | .2438 | .2718 | .2871 |
| STATIC DENSITY(MIXTURE) | .2438 | .2718 | .2871 |
| AXIAL VELOCITY | 579.6851 | 553.7134 | 548.2050 |
| ABSOLUTE VELOCITY | 606.4326 | 797.3829 | 599.3135 |
| RELATIVE VELOCITY | 1040.3398 | 730.3217 | |
| BLADE SPEED | 1041.9876 | 1049.9830 | 1063.0217 |
| TANG. COMP. OF ABS. VEL. | 178.1171 | 573.7779 | |
| TANG. COMP. OF REL. VEL. | 863.8704 | 476.2051 | |
| ACOUSTIC SPEED | 1482.1341 | 1535.5486 | 1535.6019 |
| ABSOLUTE MACH NUMBER | .4092 | .5252 | .3903 |
| RELATIVE MACH NUMBER | .7019 | .4810 | |
| FLOW COEFFICIENT | .4931 | .4710 | .4669 |
| FLOW AREA | .0827 | .0777 | .0743 |
| ABSOLUTE FLOW ANGLE | 17.0804 | 46.0195 | 23.8340 |
| RELATIVE FLOW ANGLE | 56.1371 | 40.6962 | |
| INCIDENCE | 6.6171 | 9.6095 | |
| DEVIATION | | 2.7762 | 1.0540 |
| DIFFUSION RATIO | | 1.7602 | 1.8273 |
| MOMENTUM THICKNESS | | .0367 | .0179 |
| OMEGA (GAS) | | .06069 | .02674 |
| OMEGA (TOTAL) | | .06069 | .02674 |

********** INITIAL FLOW COEFFICIENT= .350 (ISTAGE= 10 ) **********

STAGE PERFORMANCE AFTER INTER-STAGE ADJUSTMENT(JPERFM=2)

STAGE TOTAL PRESSURE RATIO= 1.25133
STAGE TOTAL TEMPERATURE RATIO= 1.07043
STAGE ADIABATIC EFFICIENCY= .90632

| | **STAGE INLET** | **STAGE OUTLET** (BEFORE INTER-STAGE ADJUSTMENT) | **STAGE OUTLET** (AFTER INTER-STAGE ADJUSTMENT) |
|---|---|---|---|
| XV= | .00323 | .00323 | .00323 |
| XW= | 0 | 0 | 0 |
| XWW= | 0 | 0 | 0 |
| XWT= | 0 | 0 | 0 |
| XAIR= | .99677 | .99677 | .99677 |
| XMETAN= | 0 | 0 | 0 |
| XGAS | 1.00000 | 1.00000 | 1.00000 |
| WMASS= | 0 | 0 | 0 |
| WWMASS= | 0 | 0 | 0 |
| WTMASS= | 0 | 0 | 0 |
| AMASS= | 11.65843 | 11.65843 | 11.65843 |
| CHMASS= | 0 | 0 | 0 |
| VMASS= | .03775 | .03775 | .03775 |
| GMASS= | 0 | 0 | 11.69618 |
| TMASS= | 11.69618 | 11.69618 | 11.69618 |
| WS= | .00324 | .00324 | .00323 |
| RHOA= | .26529 | .27222 | .28763 |
| RHOM= | .06865 | .27169 | .28706 |
| RHOG= | .24383 | .27169 | .28706 |
| TG= | 953.00241 | 1020.12508 | 1020.12508 |
| TW= | 579.85191 | 579.85191 | 579.85191 |
| TWW= | 513.70000 | 0 | 513.70000 |
| P= | 13488.70848 | 16955.79693 | 16878.88133 |
| TB= | 781.26234 | 0 | 798.03560 |
| TDEW= | 523.15571 | 530.77756 | 530.77756 |

********** INITIAL FLOW COEFFICIENT= .350 (STAGE=11 ) **********

STAGE TOTAL PRESSURE RATIO= 1.25400
STAGE TOTAL TEMPERATURE RATIO= 1.07040
STAGE ADIABATIC EFFICIENCY= .90808

STAGE FLOW COEFFICIENT= .467
AXIAL VELOCITY= 548.33
ROTOR SPEED=1174.10

| | *ROTOR INLET* | *ROTOR OUTLET* | *STATOR OUTLET* |
|---|---|---|---|
| TOTAL PRESSURE | 16878.8813 | 21306.9086 | 21166.0901 |
| STATIC PRESSURE | 15213.5873 | 17529.1223 | 19417.6666 |
| TOTAL TEMPERATURE(GAS) | 1020.1251 | 1091.9402 | 1091.9402 |
| STATIC TEMPERATURE(GAS) | 991.4025 | 1034.9083 | 1066.3684 |
| STATIC DENSITY(GAS) | .2871 | .3168 | .3406 |
| STATIC DENSITY(MIXTURE) | .2871 | .3168 | .3406 |
| AXIAL VELOCITY | 548.3345 | 525.1969 | 508.7548 |
| ABSOLUTE VELOCITY | 599.4562 | 844.8455 | 565.7171 |
| RELATIVE VELOCITY | 987.0988 | 664.0872 | |
| BLADE SPEED | 1063.0217 | 1068.1879 | 1075.3223 |
| TANG. COMP. OF ABS. VEL. | 242.2334 | 661.7644 | |
| TANG. COMP. OF REL. VEL. | 820.7883 | 406.4235 | |
| ACOUSTIC SPEED | 1533.5405 | 1590.3555 | 1590.4641 |
| ABSOLUTE MACH NUMBER | .3909 | .5392 | .3557 |
| RELATIVE MACH NUMBER | .6437 | .4238 | |
| FLOW COEFFICIENT | .4670 | .4473 | .4333 |
| FLOW AREA | .0743 | .0703 | .0675 |
| ABSOLUTE FLOW ANGLE | 23.8340 | 51.5634 | 25.9343 |
| RELATIVE FLOW ANGLE | 56.2548 | 37.7345 | |
| INCIDENCE | 8.2348 | 9.9434 | |
| DEVIATION | | 4.1445 | 1.6543 |
| DIFFUSION RATIO | | 1.9336 | 2.0672 |
| MOMENTUM THICKNESS | | .0429 | .0273 |
| OMEGA (GAS) | | .05990 | .03728 |
| OMEGA (TOTAL) | | .05990 | .03728 |

```
********************   INITIAL FLOW COEFFICIENT=  .350 (ISTAGE= 11 )  ********************

    STAGE PERFORMANCE AFTER INTER-STAGE ADJUSTMENT(JPERFM=2)

    STAGE TOTAL PRESSURE RATIO=     1.25400
    STAGE TOTAL TEMPERATURE RATIO=     1.07040
    STAGE ADIABATIC EFFICIENCY=      .90808

           **STAGE INLET**    **STAGE OUTLET**    **STAGE OUTLET**
                                (BEFORE INTER-      (AFTER INTER-
                                 STAGE ADJUST-       STAGE ADJUST-
                                 MENT)               MENT)
    XV=          .00323              .00323              .00323
    XW=               0                   0                   0
    XWW=              0                   0                   0
    XWT=              0                   0                   0
    XAIR=             0                   0              .99677
    XMETAN=           0                   0                   0
    XGAS        1.00000             1.00000             1.00000
    WMASS=            0                   0                   0
    WWMASS=           0                   0                   0
    WTMASS=           0                   0                   0
    AMASS=       11.65843            11.65843            11.65843
    CHMASS=           0                   0                   0
    VMASS=         .03775              .03775              .03775
    GMASS=       11.69618            11.69618            11.69618
    TMASS=       11.69618            11.69618            11.69618
    WS=          .00323              .00323              .00323
    RHOA=         .31012              .31729              .34123
    RHOM=         .06865              .31667              .34056
    RHOG=         .28706              .31667              .34056
    TG=     1020.12508          1091.94022          1091.94022
    TW=      579.85191           579.85191           579.85191
    TWW=     513.70000                 0            513.70000
    P=    16878.88133         21306.90856         21166.09012
    TB=      798.03560                 0            815.71467
    TDEW=             0          538.61312           538.61312
```

********** INITIAL FLOW COEFFICIENT= .350 (STAGE=12 ) **********

STAGE TOTAL PRESSURE RATIO= 1.23417
STAGE TOTAL TEMPERATURE RATIO= 1.06608
STAGE ADIABATIC EFFICIENCY= .88937

STAGE FLOW COEFFICIENT= .433
AXIAL VELOCITY= 508.87
ROTOR SPEED=1174.10

| | *ROTOR INLET* | *ROTOR OUTLET* | *STATOR OUTLET* |
|---|---|---|---|
| TOTAL PRESSURE | 21166.0901 | 26339.5226 | 26122.4493 |
| STATIC PRESSURE | 19417.0367 | 22058.6228 | 24191.6179 |
| TOTAL TEMPERATURE(GAS) | 1091.9402 | 1164.0924 | 1164.0924 |
| STATIC TEMPERATURE(GAS) | 1066.5648 | 1109.1614 | 1139.9845 |
| STATIC DENSITY(GAS) | .3406 | .3720 | .3970 |
| STATIC DENSITY(MIXTURE) | .3406 | .3720 | .3970 |
| AXIAL VELOCITY | 508.8650 | 494.8160 | 485.6343 |
| ABSOLUTE VELOCITY | 565.8483 | 832.6739 | 551.6271 |
| RELATIVE VELOCITY | 971.7434 | 641.0692 | |
| BLADE SPEED | 1075.3223 | 1077.2904 | 1081.8416 |
| TANG. COMP. OF ABS. VEL. | 247.4687 | 669.7037 | |
| TANG. COMP. OF REL. VEL. | 827.8536 | 407.5867 | |
| ACOUSTIC SPEED | 1588.0611 | 1641.7676 | 1641.8106 |
| ABSOLUTE MACH NUMBER | .3563 | .5142 | .3360 |
| RELATIVE MACH NUMBER | .6119 | .3959 | |
| FLOW COEFFICIENT | .4334 | .4214 | .4136 |
| FLOW AREA | .0675 | .0635 | .0607 |
| ABSOLUTE FLOW ANGLE | 25.9343 | 53.5409 | 28.3138 |
| RELATIVE FLOW ANGLE | 58.4218 | 39.4788 | |
| INCIDENCE | 10.0818 | 10.9109 | |
| DEVIATION | | 5.5788 | 2.5238 |
| DIFFUSION RATIO | | 2.0250 | 2.1596 |
| MOMENTUM THICKNESS | | .0552 | .0371 |
| OMEGA (GAS) | | .07232 | .05071 |
| OMEGA (TOTAL) | | .07232 | .05071 |

```
********************   INITIAL FLOW COEFFICIENT=  .350 (ISTAGE= 12 )  ********************

    STAGE PERFORMANCE AFTER INTER-STAGE ADJUSTMENT(JPERFM=2)

    STAGE TOTAL PRESSURE RATIO=      1.23417
    STAGE TOTAL TEMPERATURE RATIO=      1.06608
    STAGE ADIABATIC EFFICIENCY=       .88937

            **STAGE INLET**     **STAGE OUTLET**     **STAGE OUTLET**
                                  (BEFORE INTER-       (AFTER INTER-
                                   STAGE ADJUST-        STAGE ADJUST-
                                   MENT)                MENT)
    XV=          .00323              .00323               .00323
    XW=               0                   0                    0
    XWW=              0                   0                    0
    XWT=              0                   0                    0
    XAIR=          .99677              .99677               .99677
    XMETAN=               0                   0                    0
    XGAS        1.00000             1.00000              1.00000
    WMASS=                0                   0                    0
    WWMASS=               0                   0                    0
    WTMASS=               0                   0                    0
    AMASS=       11.65843            11.65843             11.65843
    CHMASS=               0                   0                    0
    VMASS=         .03775              .03775               .03775
    GMASS=       11.69618            11.69618             11.69618
    TMASS=       11.69618            11.69618             11.69618
    WS=          .00323              .00323               .00323
    RHOA=          .36332              .37257               .39767
    RHOM=          .06865              .37184               .39690
    RHOG=          .34056              .37184               .39690
    TG=      1091.94022          1164.09235           1164.09235
    TW=       579.85191           579.85191            579.85191
    TWW=      513.70000                   0            513.70000
    P=     21166.09012         26339.52256          26122.44926
    TB=       815.71467                   0            832.86573
    TDEW=     538.61312                   0                    0
```

********** INITIAL FLOW COEFFICIENT= .350 (STAGE=13 ) **********

STAGE TOTAL PRESSURE RATIO= 1.19922
STAGE TOTAL TEMPERATURE RATIO= 1.05747
STAGE ADIABATIC EFFICIENCY= .87183

STAGE FLOW COEFFICIENT= .414
AXIAL VELOCITY= 485.73
ROTOR SPEED=1174.10

| | *ROTOR INLET* | *ROTOR OUTLET* | *STATOR OUTLET* |
|---|---|---|---|
| TOTAL PRESSURE | 26122.4493 | 31661.6344 | 31326.6191 |
| STATIC PRESSURE | 24191.0301 | 27055.7035 | 29290.5888 |
| TOTAL TEMPERATURE(GAS) | 1164.0924 | 1230.9900 | 1230.9900 |
| STATIC TEMPERATURE(GAS) | 1140.1793 | 1179.8090 | 1208.8454 |
| STATIC DENSITY(GAS) | .3969 | .4290 | .4533 |
| STATIC DENSITY(MIXTURE) | .3969 | .4290 | .4533 |
| AXIAL VELOCITY | 485.7291 | 475.9732 | 470.7799 |
| ABSOLUTE VELOCITY | 551.7369 | 807.3125 | 531.0324 |
| RELATIVE VELOCITY | 953.1966 | 645.0096 | |
| BLADE SPEED | 1081.8416 | 1087.3769 | 1094.1423 |
| TANG. COMP. OF ABS. VEL. | 261.6886 | 652.0759 | |
| TANG. COMP. OF REL. VEL. | 820.1531 | 435.3010 | |
| ACOUSTIC SPEED | 1639.2478 | 1687.8717 | 1687.8872 |
| ABSOLUTE MACH NUMBER | .3366 | .4841 | .3146 |
| RELATIVE MACH NUMBER | .5815 | .3868 | |
| FLOW COEFFICIENT | .4137 | .4054 | .4010 |
| FLOW AREA | .0607 | .0573 | .0548 |
| ABSOLUTE FLOW ANGLE | 28.3138 | 53.8730 | 27.5588 |
| RELATIVE FLOW ANGLE | 59.3642 | 42.4445 | |
| INCIDENCE | 11.5842 | 11.9330 | |
| DEVIATION | | 6.0545 | 3.6288 |
| DIFFUSION RATIO | | 2.0337 | 2.2912 |
| MOMENTUM THICKNESS | | .0481 | .0531 |
| OMEGA (GAS) | | .07162 | .07274 |
| OMEGA (TOTAL) | | .07162 | .07274 |

```
********************   INITIAL FLOW COEFFICIENT=  .350 (ISTAGE= 13 )   ********************

    STAGE PERFORMANCE AFTER INTER-STAGE ADJUSTMENT(JPERFM=2)

    STAGE TOTAL PRESSURE RATIO=      1.19922
    STAGE TOTAL TEMPERATURE RATIO=     1.05747
    STAGE ADIABATIC EFFICIENCY=       .87183

           **STAGE INLET**     **STAGE OUTLET**     **STAGE OUTLET**
                                (BEFORE INTER-       (AFTER INTER-
                                 STAGE ADJUST-        STAGE ADJUST-
                                 MENT)                MENT)
    XV=          .00323              .00323               .00323
    XW=               0                   0                    0
    XWW=              0                   0                    0
    XWT=              0                   0                    0
    XAIR=         .99677              .99677               .99677
    XMETAN=               0                   0                    0
    XGAS        1.00000             1.00000              1.00000
    WMASS=               0                   0                    0
    WWMASS=              0                   0                    0
    WTMASS=              0                   0                    0
    AMASS=       11.65843            11.65843             11.65843
    CHMASS=               0                   0                    0
    VMASS=         .03775              .03775               .03775
    GMASS=       11.69618            11.69618             11.69618
    TMASS=       11.69618            11.69618             11.69618
    WS=          .00323              .00323               .00323
    RHOA=         .42060              .42965               .45408
    RHOM=         .06865              .42881               .45319
    RHOG=         .39690              .42881               .45319
    TG=     1164.09235          1230.99003           1230.99003
    TW=      579.85191           579.85191            579.85191
    TWW=      513.70000                   0            513.70000
    P=    26122.44926         31661.63440          31326.61915
    TB=      832.86573                   0            848.26644
    TDEW=             0          552.76242            552.76242
```

```
*******************   INITIAL FLOW COEFFICIENT=  .350 (STAGE=14 )  ******************

    STAGE TOTAL PRESSURE RATIO=      1.21348
    STAGE TOTAL TEMPERATURE RATIO=     1.06059
    STAGE ADIABATIC EFFICIENCY=       .87416

    STAGE FLOW COEFFICIENT= .401
    AXIAL VELOCITY= 470.85
    ROTOR SPEED=1174.10
```

| | *ROTOR INLET* | *ROTOR OUTLET* | *STATOR OUTLET* |
|---|---|---|---|
| TOTAL PRESSURE | 31326.6191 | 38376.2820 | 38014.2054 |
| STATIC PRESSURE | 29290.0980 | 32928.1181 | 35979.4058 |
| TOTAL TEMPERATURE(GAS) | 1230.9900 | 1305.5736 | 1305.5736 |
| STATIC TEMPERATURE(GAS) | 1209.0153 | 1253.1074 | 1286.4745 |
| STATIC DENSITY(GAS) | .4532 | .4916 | .5232 |
| STATIC DENSITY(MIXTURE) | .4532 | .4916 | .5232 |
| AXIAL VELOCITY | 470.8539 | 457.2813 | 447.2369 |
| ABSOLUTE VELOCITY | 531.1164 | 820.8047 | 495.2298 |
| RELATIVE VELOCITY | 970.3164 | 617.7523 | |
| BLADE SPEED | 1094.1423 | 1096.9714 | 1101.6457 |
| TANG. COMP. OF ABS. VEL. | 245.7258 | 681.6261 | |
| TANG. COMP. OF REL. VEL. | 848.4164 | 415.3453 | |
| ACOUSTIC SPEED | 1685.4136 | 1738.5498 | 1738.5660 |
| ABSOLUTE MACH NUMBER | .3151 | .4784 | .2848 |
| RELATIVE MACH NUMBER | .5757 | .3600 | |
| FLOW COEFFICIENT | .4010 | .3895 | .3809 |
| FLOW AREA | .0548 | .0520 | .0500 |
| ABSOLUTE FLOW ANGLE | 27.5588 | 56.1436 | 25.4331 |
| RELATIVE FLOW ANGLE | 60.9706 | 42.2486 | |
| INCIDENCE | 10.9506 | 12.1136 | |
| DEVIATION | | 5.3286 | 4.5331 |
| DIFFUSION RATIO | | 2.1864 | 2.5441 |
| MOMENTUM THICKNESS | | .0635 | .0550 |
| OMEGA (GAS) | | .08328 | .06646 |
| OMEGA (TOTAL) | | .08328 | .06646 |

```
********************   INITIAL FLOW COEFFICIENT=  .350 (ISTAGE= 14 )  ********************

    STAGE PERFORMANCE AFTER INTER-STAGE ADJUSTMENT(JPERFM=2)

    STAGE TOTAL PRESSURE RATIO=      1.21348
    STAGE TOTAL TEMPERATURE RATIO=      1.06059
    STAGE ADIABATIC EFFICIENCY=       .87416

            **STAGE INLET**     **STAGE OUTLET**     **STAGE OUTLET**
                                  (BEFORE INTER-       (AFTER INTER-
                                   STAGE ADJUST-        STAGE ADJUST-
                                   MENT)                MENT)
    XV=          .00323              .00323               .00323
    XW=               0                   0                    0
    XWW=              0                   0                    0
    XWT=              0                   0                    0
    XAIR=         .99677              .99677               .99677
    XMETAN=               0                   0                    0
    XGAS              0                   0              1.00000
    WMASS=              0                   0                    0
    WWMASS=               0                   0                    0
    WTMASS=               0                   0                    0
    AMASS=       11.65843            11.65843             11.65843
    CHMASS=               0                   0                    0
    VMASS=         .03775              .03775               .03775
    GMASS=       11.69618            11.69618             11.69618
    TMASS=       11.69618            11.69618             11.69618
    WS=          .00323              .00323               .00323
    RHOA=         .47699              .49230               .52413
    RHOM=         .06865              .49133               .52310
    RHOG=         .45319              .49133               .52310
    TG=     1230.99003          1305.57364           1305.57364
    TW=      579.85191           579.85191            579.85191
    TWW=      513.70000                   0            513.70000
    P=    31326.61915         38376.28195          38014.20544
    TB=      848.26644                   0            865.30796
    TDEW=      552.76242           559.90494            559.90494
```

```
********************   INITIAL FLOW COEFFICIENT=  .350 (STAGE=15 )  ******************

  STAGE TOTAL PRESSURE RATIO=      1.16952
  STAGE TOTAL TEMPERATURE RATIO=     1.05037
  STAGE ADIABATIC EFFICIENCY=      .83916

  STAGE FLOW COEFFICIENT= .381
  AXIAL VELOCITY= 447.30
  ROTOR SPEED=1174.10
```

| | *ROTOR INLET* | *ROTOR OUTLET* | *STATOR OUTLET* |
|---|---|---|---|
| TOTAL PRESSURE | 38014.2054 | 45028.2277 | 44458.2810 |
| STATIC PRESSURE | 35978.9591 | 40042.8265 | 42448.3242 |
| TOTAL TEMPERATURE(GAS) | 1305.5736 | 1371.3395 | 1371.3395 |
| STATIC TEMPERATURE(GAS) | 1286.6405 | 1329.2931 | 1354.6053 |
| STATIC DENSITY(GAS) | .5231 | .5635 | .5862 |
| STATIC DENSITY(MIXTURE) | .5231 | .5635 | .5862 |
| AXIAL VELOCITY | 447.3002 | 431.7760 | 428.0096 |
| ABSOLUTE VELOCITY | 495.3010 | 738.2349 | 465.7277 |
| RELATIVE VELOCITY | 995.1300 | 663.9065 | |
| BLADE SPEED | 1101.6457 | 1103.1218 | 1106.0739 |
| TANG. COMP. OF ABS. VEL. | 212.7102 | 598.7990 | |
| TANG. COMP. OF REL. VEL. | 888.9355 | 504.3227 | |
| ACOUSTIC SPEED | 1735.7243 | 1780.9766 | 1780.9779 |
| ABSOLUTE MACH NUMBER | .2854 | .4184 | .2615 |
| RELATIVE MACH NUMBER | .5733 | .3763 | |
| FLOW COEFFICIENT | .3810 | .3678 | .3645 |
| FLOW AREA | .0500 | .0481 | .0466 |
| ABSOLUTE FLOW ANGLE | 25.4331 | 54.2058 | 23.2179 |
| RELATIVE FLOW ANGLE | 63.2891 | 49.4315 | |
| INCIDENCE | 9.1291 | 15.3658 | |
| DEVIATION | | 4.3315 | 6.3479 |
| DIFFUSION RATIO | | 2.0629 | 2.6795 |
| MOMENTUM THICKNESS | | .0503 | .0849 |
| OMEGA (GAS) | | .08026 | .11432 |
| OMEGA (TOTAL) | | .08026 | .11432 |

```
********************  INITIAL FLOW COEFFICIENT=  .350 (ISTAGE= 15 )  ********************

STAGE PERFORMANCE AFTER INTER-STAGE ADJUSTMENT(JPERFM=2)

STAGE TOTAL PRESSURE RATIO=      1.16952
STAGE TOTAL TEMPERATURE RATIO=      1.05037
STAGE ADIABATIC EFFICIENCY=       .83916

        **STAGE INLET**     **STAGE OUTLET**     **STAGE OUTLET**
                              (BEFORE INTER-       (AFTER INTER-
                               STAGE ADJUST-        STAGE ADJUST-
                               MENT)                MENT)
XV=          .00323               .00323               .00323
XW=               0                    0                    0
XWW=              0                    0                    0
XWT=              0                    0                    0
XAIR=         .99677               .99677               .99677
XMETAN=            0                    0                    0
XGAS        1.00000              1.00000              1.00000
WMASS=             0                    0                    0
WWMASS=            0                    0                    0
WTMASS=            0                    0                    0
AMASS=       11.65843             11.65843             11.65843
CHMASS=            0                    0                    0
VMASS=        .03775               .03775               .03775
GMASS=       11.69618             11.69618             11.69618
TMASS=       11.69618             11.69618             11.69618
WS=          .00323               .00323               .00323
RHOA=         .54575               .56445               .58729
RHOM=         .06865               .56335               .58614
RHOG=         .52310               .56335               .58614
TG=     1305.57364           1371.33948           1371.33948
TW=      579.85191            579.85191            579.85191
TWW=      513.70000                    0            513.70000
P=    38014.20544          45028.22772          44458.28098
TB=      865.30796                    0            879.60912
TDEW=      559.90494            565.98312            565.98312
```

********** INITIAL FLOW COEFFICIENT= .350 (STAGE=16 ) **********

STAGE TOTAL PRESSURE RATIO= 1.17690
STAGE TOTAL TEMPERATURE RATIO= 1.05353
STAGE ADIABATIC EFFICIENCY= .81490

STAGE FLOW COEFFICIENT= .365
AXIAL VELOCITY= 428.05
ROTOR SPEED=1174.10

| | *ROTOR INLET* | *ROTOR OUTLET* | *STATOR OUTLET* |
|---|---|---|---|
| TOTAL PRESSURE | 44458.2810 | 53428.4011 | 52322.9747 |
| STATIC PRESSURE | 42448.0138 | 47828.3978 | 50698.5131 |
| TOTAL TEMPERATURE(GAS) | 1371.3395 | 1444.7504 | 1444.7504 |
| STATIC TEMPERATURE(GAS) | 1354.7327 | 1403.2506 | 1432.8059 |
| STATIC DENSITY(GAS) | .5861 | .6376 | .6619 |
| STATIC DENSITY(MIXTURE) | .5861 | .6376 | .6619 |
| AXIAL VELOCITY | 428.0530 | 402.0117 | 387.2411 |
| ABSOLUTE VELOCITY | 465.7750 | 736.4269 | 395.0845 |
| RELATIVE VELOCITY | 1016.9302 | 633.4593 | |
| BLADE SPEED | 1106.0739 | 1106.5659 | I |
| TANG. COMP. OF ABS. VEL. | 183.6220 | 617.0180 | |
| TANG. COMP. OF REL. VEL. | 922.4520 | 489.5480 | |
| ACOUSTIC SPEED | 1778.4451 | 1828.9923 | 1828.9732 |
| ABSOLUTE MACH NUMBER | .2619 | .4069 | .2160 |
| RELATIVE MACH NUMBER | .5718 | .3500 | |
| FLOW COEFFICIENT | .3646 | .3424 | .3298 |
| FLOW AREA | .0466 | .0456 | .0456 |
| ABSOLUTE FLOW ANGLE | 23.2179 | 56.9142 | 11.4328 |
| RELATIVE FLOW ANGLE | 65.1069 | 50.6075 | |
| INCIDENCE | 8.7669 | 16.5142 | |
| DEVIATION | | 5.2075 | 8.4028 |
| DIFFUSION RATIO | | 2.1718 | 3.1704 |
| MOMENTUM THICKNESS | | .0522 | .1420 |
| OMEGA (GAS) | | .07298 | .19740 |
| OMEGA (TOTAL) | | .07298 | .19740 |

```
********************   INITIAL FLOW COEFFICIENT=  .350 (ISTAGE= 16 )  ********************

    STAGE PERFORMANCE AFTER INTER-STAGE ADJUSTMENT(JPERFM=2)

    STAGE TOTAL PRESSURE RATIO=      1.17690
    STAGE TOTAL TEMPERATURE RATIO=     1.05353
    STAGE ADIABATIC EFFICIENCY=       .81490

            **STAGE INLET**     **STAGE OUTLET**     **STAGE OUTLET**
                                  (BEFORE INTER-       (AFTER INTER-
                                   STAGE ADJUST-        STAGE ADJUST-
                                   MENT)                MENT)
    XU=          .00323               .00323               .00323
    XW=               0                    0                    0
    XWW=              0                    0                    0
    XWT=              0                    0                    0
    XAIR=         .99677               .99677               .99677
    XMETAN=              0                    0                    0
    XGAS         1.00000              1.00000              1.00000
    WMASS=               0                    0                    0
    WWMASS=              0                    0                    0
    WTMASS=              0                    0                    0
    AMASS=       11.65843             11.65843             11.65843
    CHMASS=              0                    0                    0
    UMASS=         .03775               .03775               .03775
    GMASS=       11.69618             11.69618             11.69618
    TMASS=               0                    0             11.69618
    WS=          .00323               .00323               .00323
    RHOA=         .60765               .63866               .66317
    RHOM=         .06865               .63741               .66187
    RHOG=         .58614               .63741               .66187
    TG=      1371.33948           1444.75041           1444.75041
    TW=       579.85191            579.85191            579.85191
    TWW=      513.70000                    0            513.70000
    P=     44458.28098          53428.40108          52322.97472
    TB=       879.60912                    0            894.99536
    TDEW=     565.98312            572.63516            572.63516
```

********** OVERALL PERFORMANCE *********

INITIAL FLOW COEFFICIENT= .350

CORRECTED SPEED= 9492.1 1.000 FRACTION OF DEIGN CORRECTED SPEED

INITIAL WATER CONTENT(SMALL DROPLET)= .010
INITIAL WATER CONTENT(LARGE DROPLET)= 0
INITIAL WATER CONTENT(TOTAL)= .010
INITIAL RELATIVE HUMIDITY= .0 PER CENT
INITIAL METHANE CONTENT= 0

COMPRESSOR INLET TOTAL TEMPERATURE= 518.70

COMPRESSOR INLET TOTAL PRESSURE= 2116.80

CORRECTED MASS FLOW RATE OF MIXTURE=234.147

CORRECTED MASS FLOW RATE OF GAS PHASE 231.806

OVERALL TOTAL PRESSURE RATIO=24.7180

OVERALL TOTAL TEMPERATURE RATIO=2.7853

OVERALL ADIABATIC EFFICIENCY= .7873

********** PERFORMANCE OF FAN,LPC,HPC **********

| | GAS PHASE CORRECTED MASS FLOW | STAGNATION PRESSURE RATIO | STAGNATION TEMPERATURE RATIO | ADIABATIC EFFICIENCY |
|---|---|---|---|---|
| FAN | 231.8060 | 2.3433 | 1.3206 | .8186 |
| LPC | 56.7342 | 2.7193 | 1.3913 | .8048 |
| HPC | 24.6731 | 3.8790 | 1.5160 | .8704 |

Test Case No. 3

(1.0 Large Droplet Ingestion, No Mass Transfer,

Overall Performance Only Printout)

********** INPUT DATA **********

NS(NUMBER OF STAGE)=16
PERFORMANCE AT MEAN

NO MASS TRANSFER

LARGE DROPLETS IN ROTOR FREE STREAM ARE CENTRIFUG ED

| | 1 | 2 | 3 | 4 | 5 | 6 | 7 | 8 | 9 | 10 | 11 | 12 | 13 | 14 | 15 | 16 | |
|---|---|---|---|---|---|---|---|---|---|---|---|---|---|---|---|---|---|
| RRHUB(I) | 6.300 | 6.830 | 7.020 | 7.025 | 7.017 | 7.037 | 7.025 | 7.025 | 7.025 | 7.308 | 7.553 | 7.757 | 7.956 | 8.123 | 8.258 | 8.351 | |
| RC(I) | 3.708 | 2.786 | 2.360 | 1.199 | 1.084 | 1.339 | 1.530 | 1.483 | 1.419 | 1.627 | 1.389 | 1.338 | 1.292 | 1.211 | 1.289 | 1.481 | |
| RBLADE(I) | 60.00 | 60.00 | 60.00 | 60.00 | 60.00 | 60.00 | 60.00 | 60.00 | 60.00 | 60.00 | 60.00 | 60.00 | 60.00 | 60.00 | 60.00 | 60.00 | |
| STAGER(I) | 46.64 | 48.99 | 46.90 | 37.82 | 33.35 | 34.67 | 33.87 | 28.74 | 25.60 | 43.72 | 40.81 | 41.12 | 42.09 | 43.47 | 49.63 | 50.91 | |
| STAGES(I) | 21.64 | 17.46 | 13.78 | 17.82 | 13.90 | 19.62 | 16.83 | 26.97 | 26.66 | 29.60 | 32.95 | 34.21 | 32.94 | 32.47 | 27.86 | 21.72 | |
| SRHUB(I) | 6.650 | 6.965 | 7.025 | 7.025 | 7.025 | 7.025 | 7.025 | 7.025 | 7.130 | 7.449 | 7.674 | 7.873 | 8.053 | 8.201 | 8.311 | 8.378 | 6.220 |
| SC(I) | 1.920 | 1.813 | 1.560 | 1.378 | .814 | 1.115 | .961 | .976 | 2.663 | 1.015 | .962 | .877 | .937 | .895 | .880 | 1.211 | |
| SBLADE(I) | 60.00 | 60.00 | 60.00 | 60.00 | 60.00 | 60.00 | 60.00 | 60.00 | 60.00 | 60.00 | 60.00 | 60.00 | 60.00 | 60.00 | 60.00 | 60.00 | |
| SIGUMR(I) | 1.357 | 1.357 | 1.401 | 1.078 | 1.128 | 1.179 | 1.398 | 1.387 | 1.457 | 1.162 | 1.120 | 1.098 | 1.152 | 1.129 | 1.087 | 1.009 | |
| SIGUMS(I) | 1.299 | 1.274 | 1.456 | 1.405 | 1.427 | 1.504 | 1.544 | 1.389 | 1.489 | 1.185 | 1.284 | 1.322 | 1.372 | 1.434 | 1.527 | 2.197 | |
| BET2SS(I) | 6.21 | -1.49 | .38 | 8.86 | 1.41 | 6.55 | 5.24 | 16.23 | 16.50 | 22.78 | 24.28 | 25.79 | 23.93 | 20.90 | 16.87 | 3.03 | 6.69 |
| GAPR(I) | .637 | .612 | .607 | .453 | .373 | .339 | .300 | .300 | .300 | .300 | .300 | .300 | .300 | .300 | .300 | .300 | |
| GAPS(I) | .900 | .760 | 2.395 | .641 | .390 | .300 | .300 | .300 | .300 | .300 | .300 | .300 | .300 | .300 | .300 | .300 | |
| RRTIP(I) | 18.29 | 17.09 | 16.32 | 11.11 | 10.70 | 10.44 | 10.23 | 9.94 | 9.69 | 9.56 | 9.55 | 9.55 | 9.55 | 9.55 | 9.55 | 9.55 | |
| SRTIP(I) | 17.53 | 16.70 | 16.32 | 10.88 | 10.56 | 10.33 | 10.06 | 9.80 | 9.65 | 9.55 | 9.55 | 9.55 | 9.55 | 9.55 | 9.55 | 9.55 | 18.33 |
| RT(I) | 18.29 | 17.09 | 16.32 | 11.11 | 10.70 | 10.70 | 10.44 | 10.23 | 9.94 | 9.69 | 9.56 | 9.55 | 9.55 | 9.55 | 9.55 | 9.55 | |
| RM(I) | 10.60 | 10.51 | 10.17 | 9.31 | 9.03 | 8.93 | 8.79 | 8.62 | 8.46 | 8.47 | 8.64 | 8.74 | 8.80 | 8.89 | 8.96 | 8.99 | |
| RH(I) | 6.30 | 6.83 | 7.02 | 7.03 | 7.02 | 7.04 | 7.03 | 7.03 | 7.03 | 7.31 | 7.55 | 7.76 | 7.96 | 8.12 | 8.26 | 8.35 | |
| ST(I) | 17.53 | 16.70 | 16.32 | 10.88 | 10.56 | 10.33 | 10.07 | 9.80 | 9.65 | 9.55 | 9.55 | 9.55 | 9.55 | 9.55 | 9.55 | 9.55 | |
| SM(I) | 10.51 | 10.39 | 9.58 | 9.15 | 8.94 | 8.85 | 8.67 | 8.49 | 8.48 | 8.54 | 8.68 | 8.76 | 8.84 | 8.92 | 8.97 | 9.00 | |
| SH(I) | 6.65 | 6.97 | 7.03 | 7.03 | 7.03 | 7.03 | 7.03 | 7.03 | 7.13 | 7.45 | 7.67 | 7.87 | 8.05 | 8.20 | 8.31 | 8.38 | |
| BLOCK(I) | 1.000 | 1.000 | 1.000 | 1.000 | 1.000 | 1.000 | 1.000 | 1.000 | 1.000 | 1.000 | 1.000 | 1.000 | 1.000 | 1.000 | 1.000 | 1.000 | |
| BLOCKS(I) | 1.000 | 1.000 | 1.000 | 1.000 | 1.000 | 1.000 | 1.000 | 1.000 | 1.000 | 1.000 | 1.000 | 1.000 | 1.000 | 1.000 | 1.000 | 1.000 | 1.000 |
| BET1MR(I) | 52.88 | 55.61 | 56.07 | 48.92 | 39.94 | 45.69 | 43.01 | 42.23 | 45.14 | 49.52 | 48.02 | 48.34 | 47.78 | 50.02 | 54.16 | 56.34 | |
| BET2MR(I) | 40.40 | 42.36 | 37.73 | 29.71 | 26.76 | 26.64 | 24.73 | 15.25 | 16.06 | 37.92 | 33.59 | 33.90 | 36.39 | 36.92 | 45.10 | 45.40 | |
| BET1MS(I) | 37.07 | 36.40 | 37.17 | 26.78 | 30.38 | 32.68 | 28.41 | 37.70 | 36.82 | 36.41 | 41.62 | 42.63 | 41.94 | 44.03 | 38.84 | 40.40 | 0 |
| BET2MS(I) | 6.21 | -1.49 | .38 | 8.86 | 1.41 | 6.55 | 5.24 | 16.23 | 16.50 | 22.78 | 24.28 | 25.79 | 23.93 | 20.90 | 16.87 | 3.03 | 6.69 |
| PR12D(I) | 1.343 | 1.300 | 1.305 | 1.227 | 1.201 | 1.174 | 1.163 | 1.209 | 1.141 | 1.199 | 1.207 | 1.191 | 1.157 | 1.180 | 1.134 | 1.166 | |
| PR13D(I) | 1.335 | 1.293 | 1.301 | 1.223 | 1.194 | 1.161 | 1.152 | 1.177 | 1.134 | 1.192 | 1.197 | 1.180 | 1.145 | 1.173 | 1.129 | 1.159 | |
| ETARD(I) | .933 | .933 | .991 | .885 | .999 | .879 | .950 | .867 | .950 | .910 | .934 | .924 | .937 | .928 | .929 | .934 | |

```
***************************** INPUT DATA *****************************

FNF(FRACTION OF DESIGN CORRECTED SPEED)=1.000

XDIN(INITIAL WATER CONTENT OF SMALL DROPLET)=     0
XDDIN(INITIAL WATER CONTENT OF LARGE DROPLET)= .010
RHUMID(INITIAL RELATIVE HUMIDITY)=    .00 PER CENT
XCH4(INITIAL METHANE CONTENT)=     0

TOG(COMPRESSOR INLET TOTAL TEMPRATURE OF GAS)= 518.70
TOW(COMPRESSOR INLET TEMPERATURE OF DROPLRET)= 513.70
PO(COMPRESSOR INLET TOTAL PRESSURE)=2116.80

DIN(INITIIL DROPLET DIAMETER OF SMALL DROPLET)=  20.0
DDIN(INITIAL DROPLET DIAMETER OF LARGE DROPLET)= 600.0

FND(DESIGN ROTATIONAL SPEED)= 9492.1

DSMASS(DESIGN MASS FLOW RATE)=   25.5000

BYPASS RATIO =      1.0050

COMPRESSOR INLET TOTAL TEMPERATURE(GAS PHASE) 518.70 R

COMPRESSOR INLET TOTAL PRESSURE=2116.80 LB/FT**2

PREB(PERCENT OF WATER THAT REBOUND AFTER IMPINGEMENT)= 50.0 PERCENT

ROTOR SPEED= 9492.1 RPM

CORRECTED ROTOR SPEED=  9492.1 RPM(  100.0PER CENT OF DESIGN CORRECTED SPEED)
```

********** STAGE PERFORMANCE **********

| FAIO | STAGE | PRATIO | TRATIO | ETA | XV | XW | XWW | XWT | TG | TW |
|---|---|---|---|---|---|---|---|---|---|---|
| .340 | 1 | 1.3790 | 1.1113 | .8645 | .0000 | 0 | .0100 | .0100 | 518.70 | 513.70 |
| .340 | 2 | 1.3274 | 1.0983 | .8560 | .0000 | .0043 | .0057 | .0100 | 576.41 | 513.70 |
| .340 | 3 | 1.2474 | 1.0827 | .7848 | .0000 | .0068 | .0032 | .0100 | 633.05 | 522.65 |
| .340 | 4 | 1.1775 | 1.0605 | .7836 | .0000 | .0058 | 0 | .0058 | 685.39 | 529.49 |
| .340 | 5 | 1.2033 | 1.0604 | .8892 | .0000 | .0058 | 0 | .0058 | 726.86 | 537.90 |
| .340 | 6 | 1.1869 | 1.0592 | .8349 | .0000 | .0058 | 0 | .0058 | 770.77 | 547.65 |
| .340 | 7 | 1.1673 | 1.0502 | .8836 | .0000 | .0058 | 0 | .0058 | 816.42 | 557.26 |
| .340 | 8 | 1.1935 | 1.0649 | .7808 | .0000 | .0058 | 0 | .0058 | 857.40 | 566.25 |
| .340 | 9 | 1.1531 | 1.0440 | .9182 | .0000 | .0058 | 0 | .0058 | 913.00 | 576.60 |
| .340 | 10 | 1.2477 | 1.0701 | .8997 | .0000 | .0058 | 0 | .0058 | 953.16 | 585.87 |
| .340 | 11 | 1.2517 | 1.0701 | .9050 | .0000 | .0058 | 0 | .0058 | 1019.97 | 598.81 |
| .340 | 12 | 1.2325 | 1.0660 | .8858 | .0000 | .0058 | 0 | .0058 | 1091.50 | 615.84 |
| .340 | 13 | 1.1978 | 1.0573 | .8698 | .0000 | .0058 | 0 | .0058 | 1163.52 | 625.63 |
| .340 | 14 | 1.2129 | 1.0605 | .8741 | .0000 | .0058 | 0 | .0058 | 1230.16 | 634.85 |
| .340 | 15 | 1.1691 | 1.0502 | .8409 | .0000 | .0058 | 0 | .0058 | 1304.61 | 645.28 |
| .340 | 16 | 1.1777 | 1.0534 | .8219 | .0000 | .0058 | 0 | .0058 | 1370.12 | 654.94 |

********** OVERALL PERFORMANCE ********

INITIAL FLOW COEFFICIENT= .340

CORRECTED SPEED= 9492.1 1.000 FRACTION OF DEIGN CORRECTED SPEED

INITIAL WATER CONTENT(SMALL DROPLET)= 0
INITIAL WATER CONTENT(LARGE DROPLET)= .010
INITIAL WATER CONTENT(TOTAL)= .010
INITIAL RELATIVE HUMIDITY= .0 PER CENT
INITIAL METHANE CONTENT= 0

COMPRESSOR INLET TOTAL TEMPERATURE= 518.70

COMPRESSOR INLET TOTAL PRESSURE= 2116.80

CORRECTED MASS FLOW RATE OF MIXTURE=229.012

CORRECTED MASS FLOW RATE OF GAS PHASE 226.721

OVERALL TOTAL PRESSURE RATIO=23.7528

OVERALL TOTAL TEMPERATURE RATIO=2.7824

OVERALL ADIABATIC EFFICIENCY= .7747

********** PERFORMANCE OF FAN,LPC,HPC **********

| | GAS PHASE CORRECTED MASS FLOW | STAGNATION PRESSURE RATIO | STAGNATION TEMPERATURE RATIO | ADIABATIC EFFICIENCY |
|---|---|---|---|---|
| FAN | 226.7215 | 2.2834 | 1.3214 | .7894 |
| LPC | 56.9264 | 2.7016 | 1.3907 | .8006 |
| HPC | 24.8488 | 3.8505 | 1.5141 | .8685 |

DISTRIBUTION LIST

DISTRIBUTION LIST

GRANT NAG 3-204

NASA-Lewis Research Center
Attn:
21000 Brookpark Road
Cleveland, OH 44135

| | | Quantity |
|---|---|---|
| Fluid Mechanics & Acoustics Division | M.S. 5-3 | 1 |
| Fan and Compressor Branch | M.S. 5-9 | 1 |
| C.L. Ball | M.S. 5-9 | 1 |
| L. Reid | M.S. 5-9 | 1 |
| D.M. Sandercock | M.S. 5-9 | 1 |
| N.T. Musial | M.S. 500-318 | 1 |
| L.E. Macioce | M.S. 301-4 | 1 |
| L.H. Fishback | M.S. 501-10 | 1 |
| J.C. Marek | M.S. 86-6 | 1 |
| A.J. Strazisar | M.S. 5-9 | 1 |
| J.R. Wood | M.S. 5-9 | 1 |

NASA Lewis Research Center 3
Attn: R.J. Steinke (M.S. 5-9)
21000 Brookpark Road
Cleveland, OH 44135

NASA Lewis Research Center 1
Attn: S. Szabo (M.S. 500-302)
21000 Brookpark Road
Cleveland, OH 44135

NASA Scientific and Technical 25
Information Facility
Attn: Accessioning Department
P.O. Box 8757
Balt./Wash. International Airport
MD 21240

E.E. Bailey 1
AFAPL/DO
Wright Patterson AFB, OH 45433

NASA Lewis Research Center 2
Attn: Library (M.S. 60-3)
21000 Brookpark Road
Cleveland, OH 44135

NASA Lewis Research Center 1
Attn: Report Control Office (M.S. 5-5)
21000 Brookpark Road
Cleveland, OH 44135

| | | Quantity |
|---|---|---|
| NASA Headquarters<br>Attn: RTP-6G. Banerian<br>Washington, D.C. 20546 | | 1 |
| U.S. Army Applied Technology Laboratories (AVRADCOM)<br>Director Applied Technology Laboratory<br>Attn: DAVDL-EU-TA, John White<br>Fort Eustis, VA 23604 | | 1 |
| NASA-Langley Research Center<br>Attn: S.J. Morris<br>Hampton, VA 23665 | M.S. 249B | 1 |
| Headquarters<br>Attn: E.E. Bailey, AFWAL/NASA-PO<br>R.P. Carmichael ASD/XRHI<br>S. Kobelak, AFWAL/POTX<br>A.J. Wennerstrom, AFWAL/POTX<br>M.A. Stibich, AFWAL/POTX<br>Wright-Patterson AFB, OH 45433 | | <br>1<br>1<br>1<br>1<br>1 |
| Naval Air Systems Command<br>NASAIR/52022<br>Attn: R.A. Retta<br>Technical Support Branch<br>Washington, D.C. 20362 | | 1 |
| U.S. Navy Ship/Engineering Center<br>Code 6141<br>Attn: G.L. Graves<br>Washington, D.C. 20362 | | 1 |
| Naval Air Propulsion Center<br>Attn: V. Labosky<br>J. Pichtelberger<br>P. Piscopo<br>Trenton, NJ 08628 | <br>PE-7<br>PE-7<br>PE-42 | <br>1<br>1<br>1 |
| Pratt & Whitney Aircraft<br>Government Products Division<br>Attn: W.R. Alley<br>J. Brent<br>R.E. Davis<br>J.A. Fligg<br>B.A. Jones<br>R.W. Rockenbach<br>H.D. Stetson<br>P.O. Box 2691<br>West Palm Beach, FL 33402 | | <br><br>1<br>1<br>1<br>1<br>1<br>1<br>1 |

| | | Quantity |
|---|---|---|
| Pratt & Whitney Aircraft | | |
| Attn: T.J. Gillespie | E2H | 1 |
| N.T. Monsarrat | E2H | 1 |
| R.E. Pallatine | E2H | 1 |
| A.W. Stubner | E2H | 1 |
| H.D. Weingold | E2H | 1 |
| W.M. Foley (UTRC) | | 1 |
| Library (Comm. Prod. Div.) | | 1 |
| Library (UTRC) | | 1 |
| D.J. Hopwood | E2H | 1 |
| 400 Main Street | | |
| East Hartford, CT 06108 | | |
| Detroit Diesel Allison Division, GMC | | |
| Attn: R.F. Alverson | U-28 | 1 |
| J.L. Bettner | U-28 | 1 |
| R.L. Jay | W-16 | 1 |
| R.E. Riffel | W-16 | 1 |
| P. Tramm | U-27 | 1 |
| Library | S-5 | 1 |
| Department 8894, Plant 8 | | |
| P.O. Box 894 | | |
| Indianapolis, IN 46206 | | |
| Northern Reserach and Engineering | | |
| Attn: K. Ginwala | | 1 |
| 39 Olympia Avenue | | |
| Woburn, MA 01801 | | |
| Genreal Electric Company | | |
| Aircraft Engine Business Group | | |
| Attn: J.F. Klapproth | K-221 | 1 |
| C.C. Koch | H-4 | 1 |
| J.W. McBride | O-13 | 1 |
| Marlen Miller | K-69 | 1 |
| D.E. Parker | H-4 | 1 |
| D. Prince | H-4 | 1 |
| L.H. Smith | H-4 | 1 |
| Technical Information Center | N-32 | 1 |
| J.S. Keith | H-4 | 1 |
| D.C. Wisler | H-4 | 1 |
| Cincinnati, OH 45215 | | |
| General Electric Company | | |
| Attn: A. Bryans | M.Z. 24048 | 1 |
| F.F. Ehrich | M.Z. 24505 | 1 |
| L.H. King | M.Z. 240GF | 1 |
| R.E. Neitzel | M.Z. 24502 | 1 |
| 1000 Western Avenue | | |
| Lynn, MA 01910 | | |

| | | Quantity |
|---|---|---|
| Curtiss-Wright Corporation<br>Wright Aeronautical<br>Attn: R. Cole<br>S. Lombardo<br>Wood-Ridge, NJ 07075 | | <br><br>1<br>1 |
| Garrett Turbine Engine Company<br>Attn: P.R. Dodge<br>W.L. Blackmore<br>W.F. Waterman<br>J.R. Switzer<br>Librarian<br>P.O. Box 3217<br>Phoenix, AZ 85010 | | <br>1<br>1<br>1<br>1<br>1 |
| AiResearch Manufacturing Company<br>Attn: R. Carmody<br>R. Jackson<br>L.W. Pearson<br>Library<br>2525 West 190th Street<br>Torrance, CA 90509 | | <br>1<br>1<br>1<br>1 |
| Union Carbide Corporation<br>Nuclear Division<br>Oak Ridge Gaseous Diffusion Plant<br>Attn: G.B. Boroughs, K 1401<br>P.O. Box P<br>Oak Ridge, TN 37830 | <br><br><br>M.S. 385 | <br><br><br>1 |
| AVCO Corporation<br>Lycoming Division<br>Attn: Richard Ainsworth<br>Library<br>550 South Main Street<br>Stratford, CT 06497 | | <br><br>1<br>1 |
| Teledyne, CAE<br>Attn: Eli H. Benstein<br>Howard C. Walch<br>1330 Laskey Road<br>Toledo, OH 43612 | | <br>1<br>1 |
| International Harvester Co.<br>Solar Turbine International Group<br>Attn: P.A. Pitt<br>J. Watkins<br>P.O. Box 80966<br>San Diego, CA 92138 | <br><br>A-5<br>C-5 | <br><br>1<br>1 |

| | | Quantity |
|---|---|---|
| Goodyear Atomic Corporation<br>Attn: C.O. Langebrake<br>Box 628<br>Piketon, OH 45661 | | 1 |
| Hamilton Standard Division of<br>United Technologies Corporation<br>Attn: Carl Rohrback, Chief,<br>Aerodynamics & Hydrodynamics<br>Windsor Locks, CT 06096 | M.S. 1A-3-6 | 1 |
| Westinghouse Electric Corporation<br>Combustion Turbine System Division<br>Attn: S.M. DeCorso<br>P.O. Box 251 - (Lab 101)<br>Corcordville, PA 19331 | M.S. A703 | 1 |
| Eaton Reserach Center<br>Attn: Librarian<br>P.O. Box 766<br>Southfield, MI 48037 | | 1 |
| Williams International<br>Attn: R.A. Horn, Jr.<br>Ronald Pampreen<br>P.O. Box 200<br>Walled Lake, MI 48088 | | 1<br>1 |
| Mechanical Technology Incorporated<br>Attn: L. Chelko<br>968 Albany-Shaker Road<br>Latham, NY 12110 | | 1 |
| Chrysler Corporation<br>Research Office<br>Department 9510<br>Attn: Library<br>P.O. Box 1118<br>Detroit, MI 48288 | | 1 |
| Elliott Company<br>Attn: John W. Schlirf<br>Vice President of Engineering<br>Jeannette, PA 15644 | | 1 |
| Caterpillar Tractor Company<br>Attn: J. Wiggins<br>Research Dept., Technical Center, Bldg. F<br>100 N.E. Adams Street<br>Peoria, IL 61629 | | 1 |

| | | Quantity |
|---|---|---|
| Boeing Aerospace Co.<br>Attn: W.C. Swan<br>A.D. Welliver<br>P.O. Box 3999<br>Seattle, WA 98124 | <br>M.S. 40-51<br>M.S. 41-52 | <br>1<br>1 |
| McDonald Douglas Aircraft Company<br>Attn: Dr. Albert C. Munson - 3557<br>3855 Lakewood Blvd.<br>Long Beach, CA 90801 | | 1 |
| Lockheed Missile and Space Company<br>Attn: Technical Information Center<br>Dept. 52-50, Bldg. 106<br>P.O. Box 504<br>Sunnyvale, CA 94088 | | 1 |
| California Institute of Technology<br>Attn: Professor Duncan Rannie<br>Dr. Frank Marble<br>1201 East California Blvd.<br>Pasadena, CA 91109 | <br>205-45<br>205-45 | <br>1<br>1 |
| Iowa State University of Science and Technology<br>Attn: Professor G.K. Serovy<br>Dept. of Mechanical Engineering<br>P.O. Box 1204<br>Welch Avenue Station<br>Ames, IA 50010 | | 1 |
| Massachusetts Institute of Technology<br>Attn: Dr. J. McCune<br>Cambridge, MA 02139 | | 1 |
| Univeristy of Notre Dame<br>Attn: Engineering Library<br>Notre Dame, IN 46556 | | 1 |
| Penn State University<br>Department of Aerospace Engineering<br>Attn: Prof. B. Lakshminarayana<br>233 Hammond Building<br>University Park, PA 16802 | | 1 |
| Texas A & M University<br>Department of Mechanical Engineering<br>Attn: Dr. Meherwan P. Boyce<br>P.O. Box 3222<br>Bryan, TX 77801 | | 1 |

| | Quantity |
|---|---|
| University of Tennessee Space Institute | |
| Attn: Dr. M. Kurosaka | 1 |
| Dr. J. Caruthers | 1 |
| Tullahoma, TN 37388 | |
| University of Delaware | |
| Attn: Prof. Barry Seidel | 1 |
| Dept. of Mech. & Aero. Engrg. | |
| Newark, DE 19711 | |
| Purdue University | |
| Attn: S.N.B. Murthy | 1 |
| C.M. Ehresman | 1 |
| School of Mechanical Engineering | |
| West Lafayette, IN 47907 | |