General Disclaimer

One or more of the Following Statements may affect this Document

- This document has been reproduced from the best copy furnished by the organizational source. It is being released in the interest of making available as much information as possible.

- This document may contain data, which exceeds the sheet parameters. It was furnished in this condition by the organizational source and is the best copy available.

- This document may contain tone-on-tone or color graphs, charts and/or pictures, which have been reproduced in black and white.

- This document is paginated as submitted by the original source.

- Portions of this document are not fully legible due to the historical nature of some of the material. However, it is the best reproduction available from the original submission.

Produced by the NASA Center for Aerospace Information (CASI)

DRA / LANGLEY

(NASA-CR-173880) DEVELOPMENT AND FLIGHT EVALUATION OF AN AUGMENTED STABILITY ACTIVE CONTROLS CONCEPT WITH A SMALL TAIL (Lockheed-California Co., Burbank.) 96 p HC A05/MF A01 CSCL 01C G3/08

N84-32395

Unclas 21953

NASA/LOCKHEED

AIRCRAFT ENERGY EFFICIENCY

DEVELOPMENT AND FLIGHT EVALUATION OF AN AUGMENTED STABILITY ACTIVE CONTROLS CONCEPT WITH A SMALL TAIL

SEP 1984
RECEIVED
NASA STI FACILITY
ACCESS DEPT.

NASA1-15326

ORAL PRESENTATION OCTOBER 9, 1980

LOCKHEED-CALIFORNIA CO.
BURBANK, CALIFORNIA

PREPARED FOR NASA LANGLEY RESEARCH CENTER

SEP 1984
PUBLICLY RELEASED
ON

LR 29619

NASA/LOCKHEED

AIRCRAFT ENERGY EFFICIENCY

DEVELOPMENT AND FLIGHT EVALUATION OF AN AUGMENTED STABILITY ACTIVE CONTROLS CONCEPT WITH A SMALL TAIL

NAS1-15326

ORAL PRESENTATION OCTOBER 9, 1980

LOCKHEED-CALIFORNIA CO.
BURBANK, CALIFORNIA

PREPARED FOR NASA LANGLEY RESEARCH CENTER

NASA/LOCKHEED
AIRCRAFT ENERGY EFFICIENCY

LOCKHEED PROGRAM AGENDA

- INTRODUCTION _____ FRED ENGLISH
- OVERVIEW OF PROGRAM _____ WILEY GUINN
- FLYING QUALITIES AND AERODYNAMICS _____ JERRY RISING
- FLIGHT CONTROL SYSTEMS _____ DICK HEIMBOLD
- MODERN CONTROL ANALYSIS CONCEPTS _____ BOB ROONEY
- PROJECTIONS _____ WILEY GUINN

PRECEDING PAGE BLANK NOT FILMED

NASA/LOCKHEED

AIRCRAFT ENERGY EFFICIENCY

OVERVIEW OF PROGRAM

WILEY A. GUINN

FUEL SAVING TECHNOLOGY BEING EVALUATED

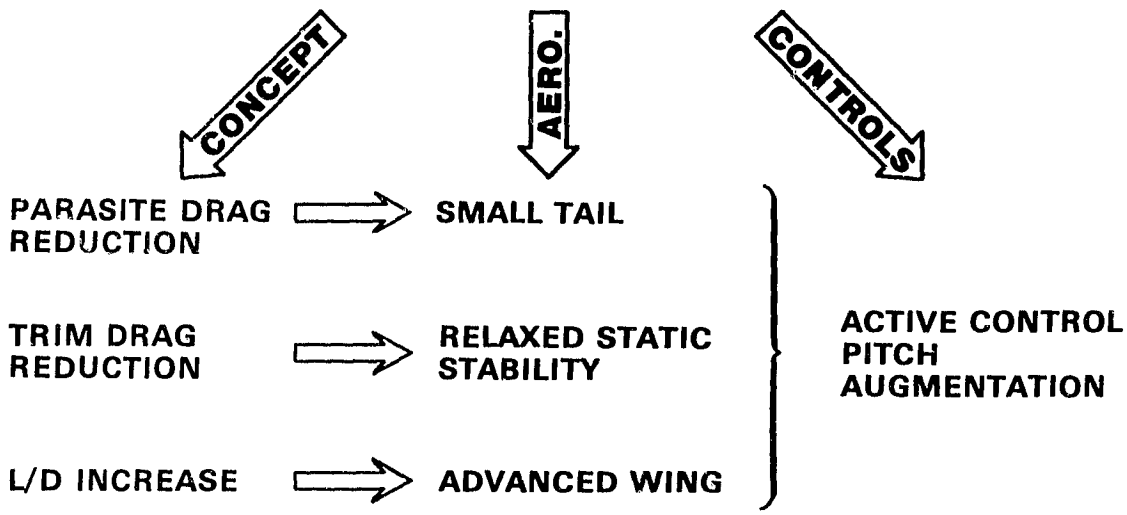

Fuel saving technology being evaluated are:

- Parasite drag reduction
- Trim drag reduction
- Lift to drag (L/D) increase

Parasite drag reduction evaluation consists of wind tunnel tests with the standard L-1011 tail and two reduced area tail configurations.

Trim drag reduction is to be evaluated during flight tests by rebalancing the airplane for relaxed static stability. The rebalancing is accomplished by pumping water as required to tanks located in the forward and aft of the airplane to achieve the desired cg location.

Advanced technology wings increased L/D values relative to current L-1011 wings will be evaluated in the wind tunnel. Thus, by using advanced wings and aircraft relaxed static stability significant fuel savings can be realized.

The dynamic stability of an airplane becomes more sensitive for decreased tail size, relaxed static stability, and advanced wing configurations. Consequently, aircraft longitudinal handling qualities would be degraded. However, active control pitch augmentation will be used to achieve the required handling qualities. Flight tests are to be performed to evaluate the pitch augmentation systems.

NASA/LOCKHEED AIRCRAFT ENERGY EFFICIENCY

HORIZONTAL TAIL CONCEPTS EVALUATED

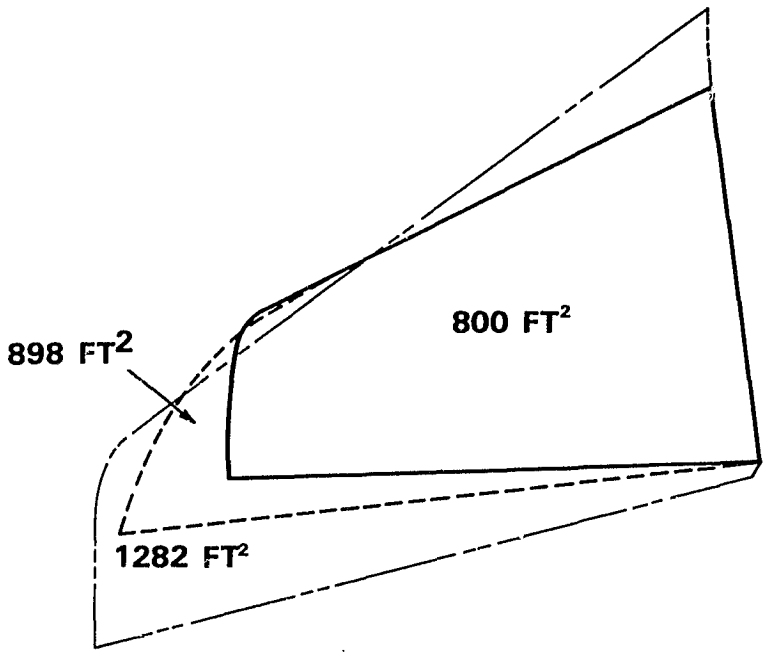

Three different horizontal tail concepts are being used to evaluate the benefits to be gained by parasite drag reduction. The 1282 ft^2 tail is the basic L-1011 tail. The 898 ft^2 tail is for an airplane with a reduced tail length and utilizing a pitch augmentation system. The 800 ft^2 tail is for an airplane with an extended tail length and utilizing a pitch augmentation system.

NASA/LOCKHEED AIRCRAFT ENERGY EFFICIENCY

FUEL SAVINGS FOR SMALL HORIZONTAL TAIL

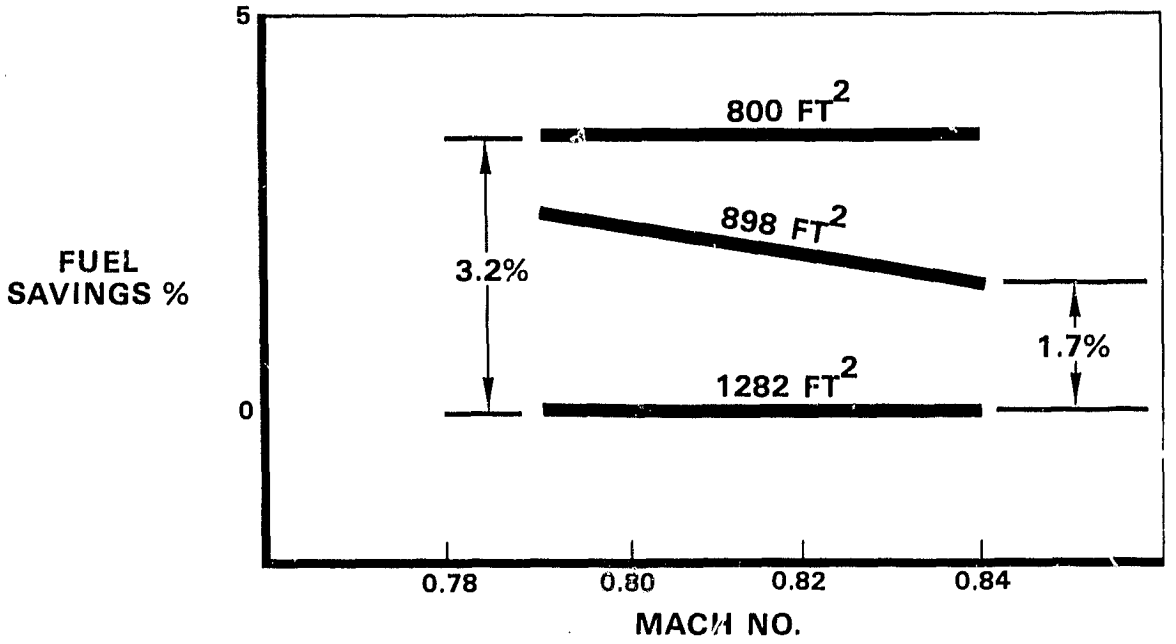

Fuel savings for the three horizontal tail concepts that were evaluated are shown as a function of Mach number. The values shown are based on high speed wind tunnel drag data. An airplane equipped with the 800 ft^2 tail would use 3.2% less fuel than an airplane with the 1282 ft^2 standard L-1011 tail. The 898 ft^2 tail uses about 2.5% less fuel at Mach .79, but as the Mach number increases to .84 fuel savings are 1.7%.

NASA/LOCKHEED AIRCRAFT ENERGY EFFICIENCY

FUEL SAVINGS FOR RELAXED STATIC STABILITY

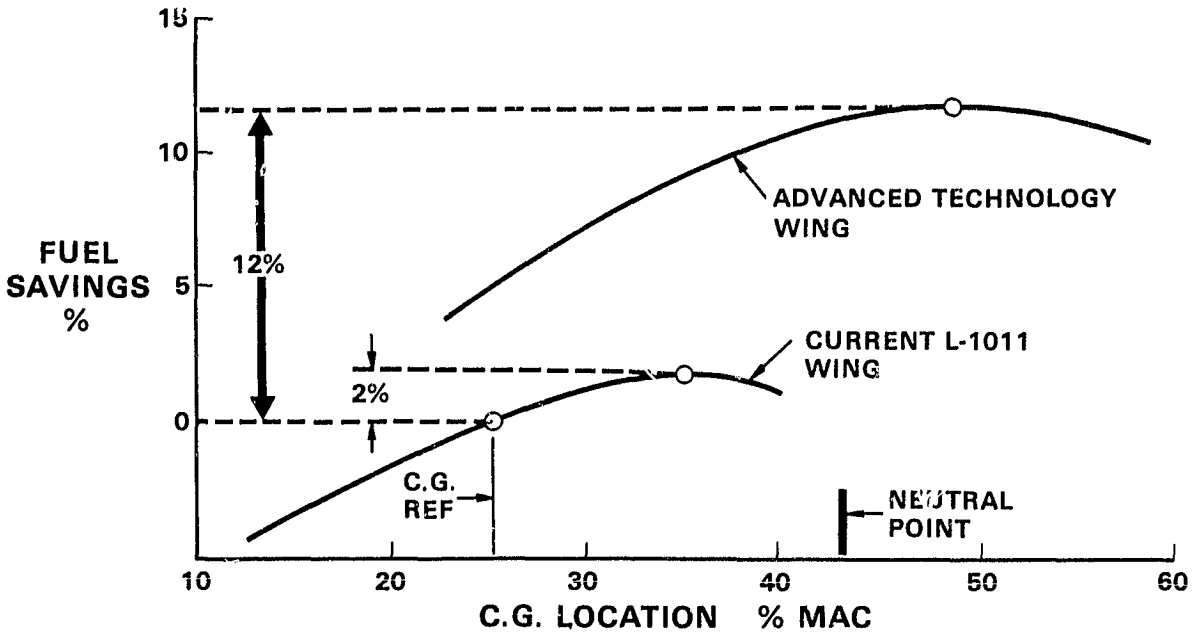

An airplane that has the center of gravity (cg) forward of the neutral point is considered to be statically stable. The stability margin is based on the distance between the cg and the neutral point. Reduction of the static margin by moving the center-of-gravity aft is called relaxed static stability (RSS). Fuel saving benefits possible for an aircraft with a current L-1011 wing by relaxing the static stability is 2% due to reduced trim drag. For an aircraft with advanced wing technology and relaxed static stability the saving potential is 12%. The cg reference point shown is for a current L-1011 aircraft. The data base for determining the fuel savings is high speed wind tunnel drag data.

ORIGINAL PAGE IS
OF POOR QUALITY

NASA/LOCKHEED
AIRCRAFT ENERGY EFFICIENCY

ACTIVE CONTROL AUGMENTATION SYSTEM REQUIREMENTS FOR RELAXED STATIC STABILITY OPERATING CONDITIONS

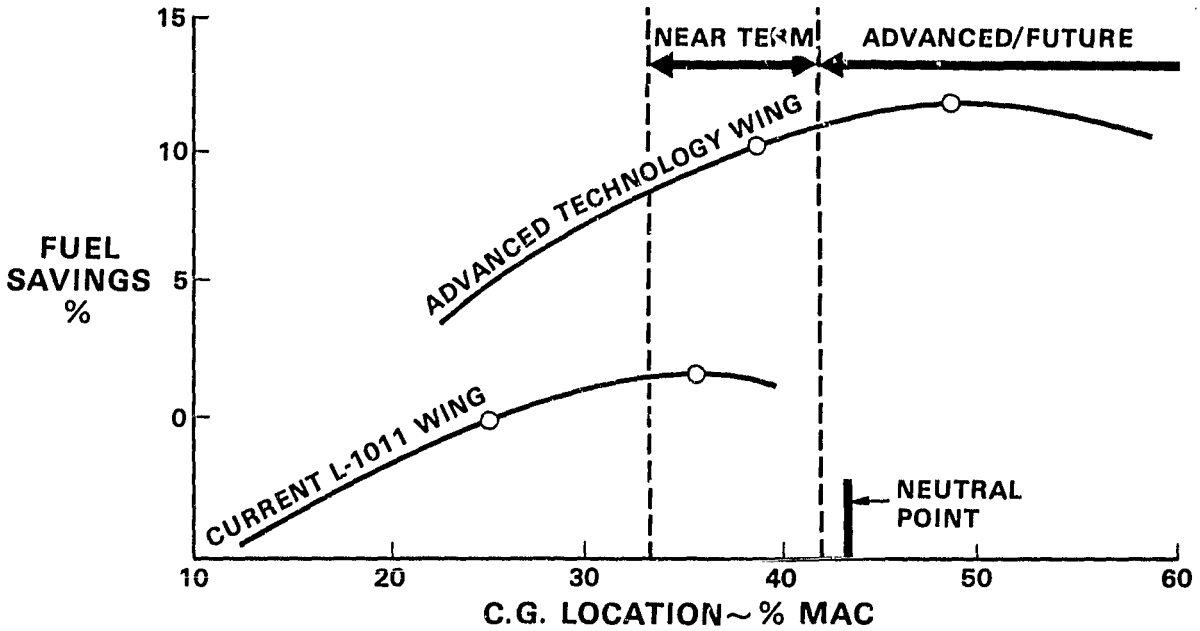

Active control augmentation system requirements for relaxed static stability operating conditions have been designated as near term, advanced, and future flight control systems. Block diagrams of these systems are shown in the following three charts. Rebalancing of an aircraft with a current L-1011 wing to achieve maximum fuel efficiency requires the cg location to be at 35% mean aerodynamic chord (MAC). Thus the near term augmentation system is required. An airplane equipped with an advanced technology wing requires either the advanced or future flight control system to achieve maximum fuel savings. Note that the maximum savings occur when the cg is located at 50% MAC. Thus, the aircraft is statically unstable since the cg is aft of the neutral point.

NASA/LOCKHEED AIRCRAFT ENERGY EFFICIENCY

NEAR TERM FLIGHT CONTROL SYSTEM

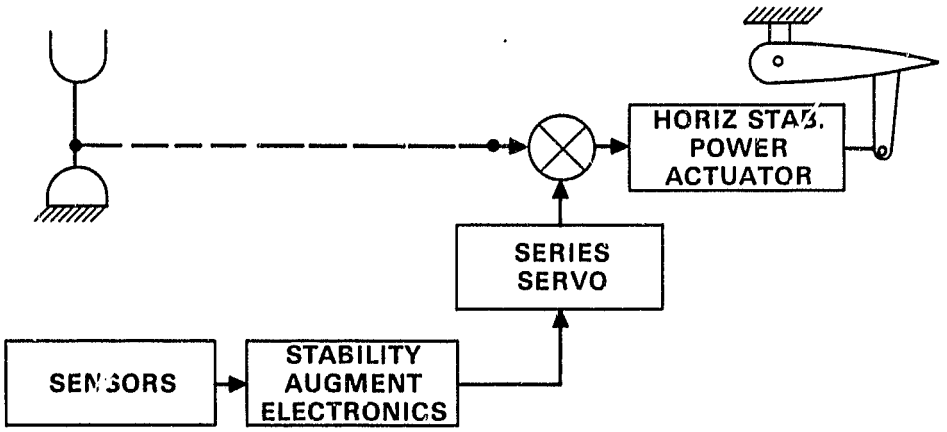

The near term flight control system provides stabilizing inputs to the existing L-1011 control system by means of the series servo. Signals to the series are provided by a pitch rate sensor and active controls stability augmentation electronics.

NASA/LOCKHEED AIRCRAFT ENERGY EFFICIENCY

ADVANCED FLIGHT CONTROL SYSTEM

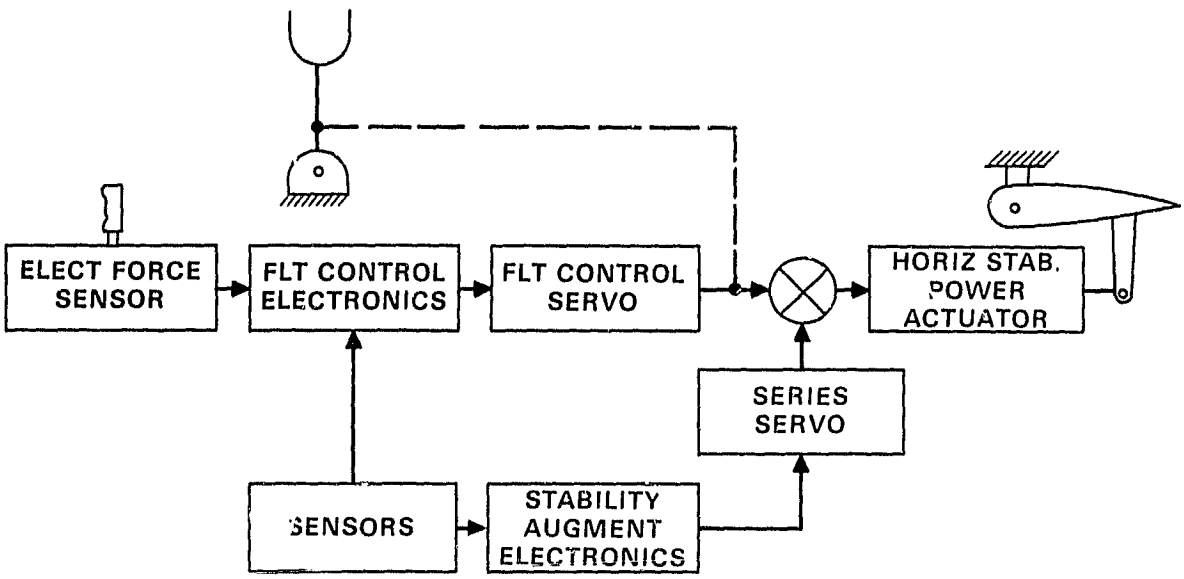

The advanced flight control system is an electronic system retaining as back-up the existing L-1011 flight control system plus series servo, as shown in the previous chart. Sensors for this system include pitch rate and attitude or angle of attack sensors.

NASA/LOCKHEED AIRCRAFT ENERGY EFFICIENCY

FUTURE FLIGHT CONTROL SYSTEM

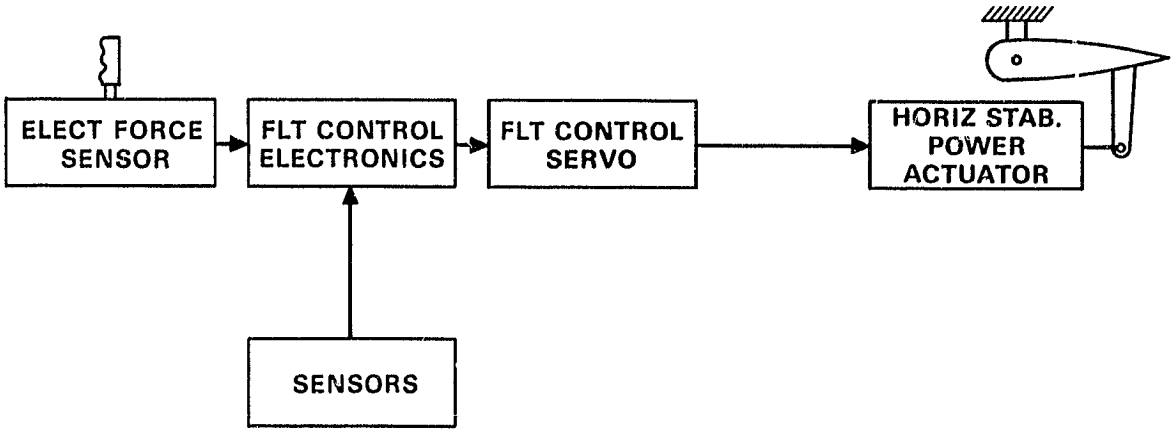

The future flight control system is a full electronic system. The block diagram for this system is the same as for the electronic path of the advanced system shown in the previous chart. Also, the same sensors are required. Requirements for this system are that it must have redundant channels with fail operational provisions with one channel inoperable and fail safe provisions with two channels inoperable.

NASA/LOCKHEED AIRCRAFT ENERGY EFFICIENCY

ACTIVE CONTROL PITCH AUGMENTATION SYSTEMS DEVELOPMENT

	ANALYSIS/ DESIGN	PILOTED FLIGHT SIMULATION	VEHICLE SYSTEM SIMULATION	FLIGHT TEST
• NEAR TERM	●	○	○	○
• ADVANCED	●	○	○	○
• FUTURE	○			

The flight control systems development approach is shown. The near term and advanced systems development consists of analysis/design, piloted flight simulation, vehicle system simulation and flight test. Analysis/design consist of aerodynamic analysis and wind tunnel tests; control law synthesis; avionics hardware and software modification; and mechanical systems design and test. Piloted flight simulation will be conducted on a 4 degree of freedom moving base simulator. The vehicle system simulation will be conducted on an L-1011 functional systems simulator known as the "iron bird". Flight tests will be conducted on L-1011 S/N 1001. This aircraft has extended span wing and a basic L-1011 horizontal tail. This tail consists of a moving stabilizer with a geared elevator. The elevator will have a 5° downrig in order to provide the required airplane-nose-down control power for the relaxed static stability tests.

NASA/LOCKHEED

AIRCRAFT ENERGY EFFICIENCY

FLYING QUALITIES AND AERODYNAMICS

JERRY RISING

NASA/LOCKHEED AIRCRAFT ENERGY EFFICIENCY

FLYING QUALITIES AND AERODYNAMICS

OBJECTIVE

- IMPROVE CRUISE EFFICIENCY BY REDUCING AERODYNAMIC DRAG

APPROACH

- RELAX THE STATIC LONGITUDINAL STABILITY REQUIREMENT THUS ALLOWING:
  - REDUCED HORIZONTAL TAIL SIZE (DECREASED PARASITE DRAG)
  - FARTHER AFT AIRCRAFT BALANCE (DECREASED TRIM DRAG)
- EMPLOY ACTIVE CONTROLS TO MAINTAIN GOOD HANDLING QUALITIES

The objective of this study is to investigate the application of relaxed static stability as a means of reducing aerodynamic drag, thus increasing cruise energy efficiency. Applying relaxed static stability conceptually offers the benefits of allowing a smaller horizontal tail, which decreases parasite drag, or more aft cg locations, which decreases trim drag. Successful application of this concept depends on the development of a stability and control augmentation system to prevent any degradation in handling qualities.

NASA/LOCKHEED AIRCRAFT ENERGY EFFICIENCY

1977 - 1979 ACHIEVEMENTS

- RELAXED STATIC STABILITY TAIL SIZING CRITERION DEVELOPED
- NEAR-TERM AUGMENTATION SYSTEM DESIGNED
- PILOTED FLIGHT SIMULATION VALIDATED NEAR-TERM SYSTEM CONCEPT
- SMALL HORIZONTAL TAIL CONFIGURATIONS DEFINED
- WIND-TUNNEL DATA BASE DEVELOPED

Activity on Relaxed Static Stability (RSS) concepts was started as a secondary task of the Phase I contract. The primary objective of the Phase I contract was the development and flight demonstration of an extended span wing for decreased induced drag with active ailerons to alleviate the increased wing loads. This contract was started in February 1977 and is now complete.

The following work was completed under the Phase I contract RSS task:

- Aft cg stall recovery requirements were developed to replace the conventional static margin condition as a tail sizing criterion. This criterion was postulated as an angular acceleration requirement correlated in terms of pitching moment of inertia.
- A near-term stability and control augmentation system (SCAS) was developed for relaxed static stability conditions. An equivalence approach was used in the system development to require that handling qualities be as good as or better than the basic L-1011.
- Small horizontal tail configurations were developed for L-1011 derivatives based on the new RSS sizing criterion.
- A number of low-speed and high-speed wind-tunnel tests have been conducted to develop the data base necessary to evaluate the various small tail configurations.

NASA/LOCKHEED AIRCRAFT ENERGY EFFICIENCY

HORIZONTAL TAIL CANDIDATES

MODEL	DESCRIPTION	AIRFOIL T/C	AREA ~ FT^2
H_{8C}	STANDARD L-1011 TAIL	.09	1282
H_{16}	SMALL TAIL INITIAL DESIGN	.09	800
H_{17}	NEW AIRFOIL FOR LOW-SPEED C_L	.1045	800
H_{18}	RESIZED FOR SHORT FUSELAGE	.1045	898

Three small horizontal tail configurations have been developed for the various L-1011 derivatives. The H_{16} tail was sized for standard fuselage length L-1011 derivatives. It has an airfoil section selected for good high-speed characteristics; however, its low-speed maximum lift capability was found deficient. H_{17} was designed to obtain better low-speed characteristics than H_{16} without seriously degrading its high-speed characteristics; its thickness, camber, and leading-edge radius were all increased slightly. H_{18} is an increased area version of H_{17} designed for application to the shorter aft fuselage –500 derivatives.

NASA/LOCKHEED AIRCRAFT ENERGY EFFICIENCY

HORIZONTAL TAIL CHARACTERISTICS

	STANDARD TAIL H_{8C}	H_{16}	H_{17}	H_{18}
AREA (FT^2):				
TOTAL	1282	800	800	898
EXPOSED	960	552	552	652
C/4 SWEEP ANGLE	35°	25°	25°	25°
ASPECT RATIO	4	4	4	4.5
MEAN CHORD (FT.):				
TOTAL	19.42	15.25	15.25	15.25
ELEVATOR	0.25C	0.3C	0.3C	0.3C
TAPER RATIO	0.33	0.33	0.33	0.33

The small horizontal tail configurations were designed with decreased sweep angle to improve lift-slope characteristics, and increased elevator chord to optimize high-lift characteristics. Also note the difference in thickness, camber, and leading-edge radius of the various tail configurations. A disadvantage of the small tail configurations is that a smaller percentage of the area is actually exposed.

NASA/LOCKHEED AIRCRAFT ENERGY EFFICIENCY

HORIZONTAL TAIL AIRFOILS

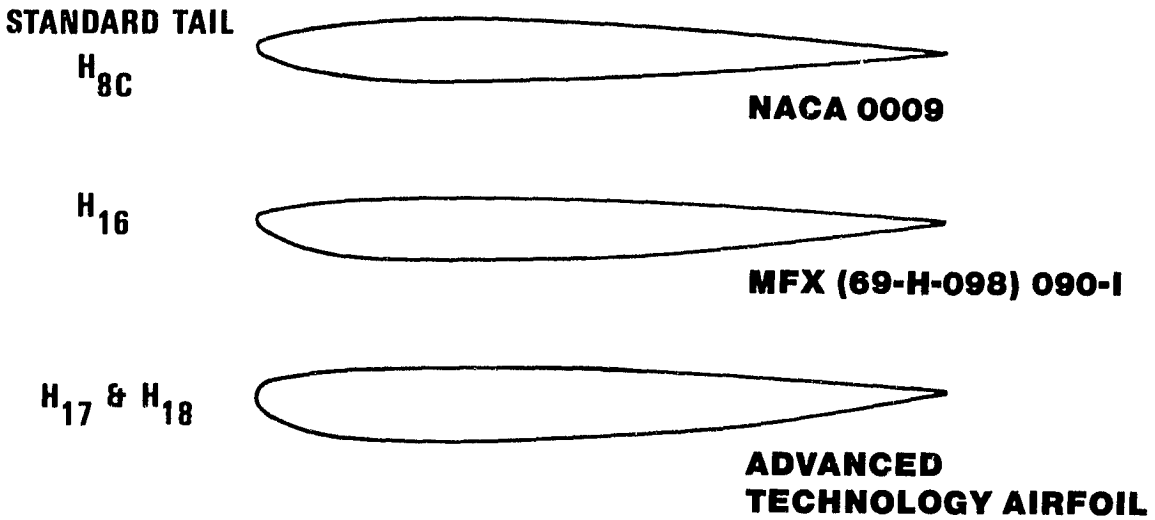

The standard horizontal tail airfoil for the L-1011 is a 9% thick symmetrical section. The airfoil section for H_{16} has the same thickness as H_{8C} but is unsymmetrical with inverse camber and a smaller leading-edge radius. The airfoil for H_{17} and H_{18} has increased thickness, camber, and leading-edge radius.

NASA/LOCKHEED
AIRCRAFT ENERGY EFFICIENCY

HORIZONTAL TAIL PLANFORMS

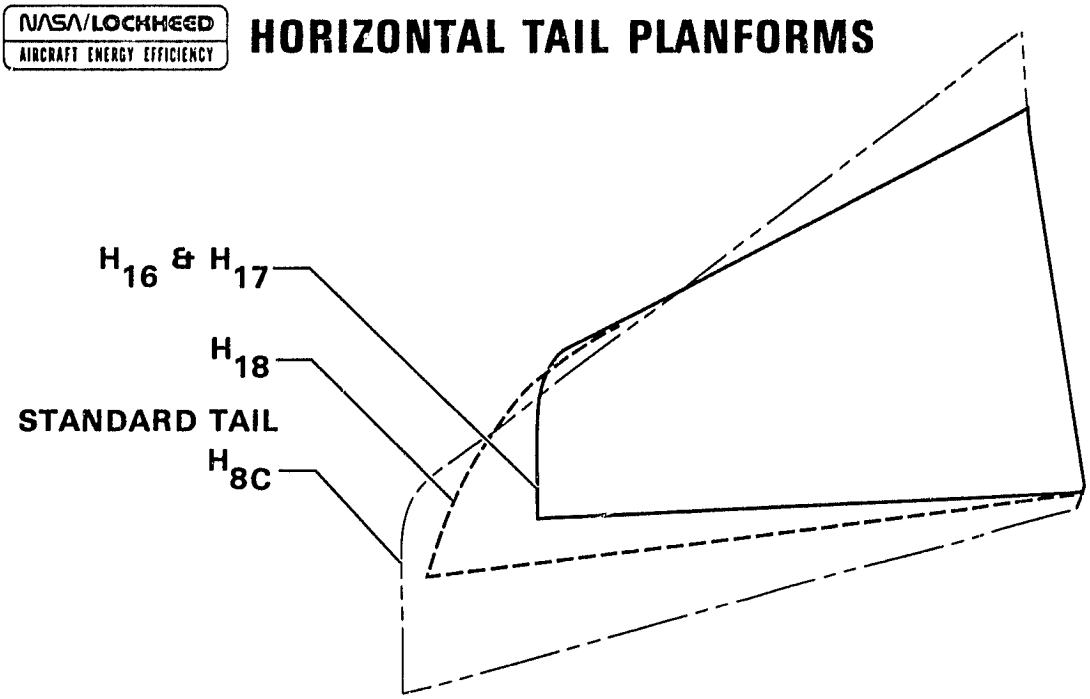

The planform projection of the various horizontal tail configurations illustrates the reduction in sweep angle of H_{16}, H_{17}, and H_{18}. The increased area of H_{18} was designed for application to the shorter fuselage –500 derivatives. The swept tip on H_{18} was designed to obtain flow characteristics at the tip better than those observed in high-speed flow visualization tests of H_{17}.

ORIGINAL PAGE IS
OF POOR QUALITY

NASA LOCKHEED
AIRCRAFT ENERGY EFFICIENCY

HORIZONTAL & VERTICAL TAIL MODEL COMPONENTS

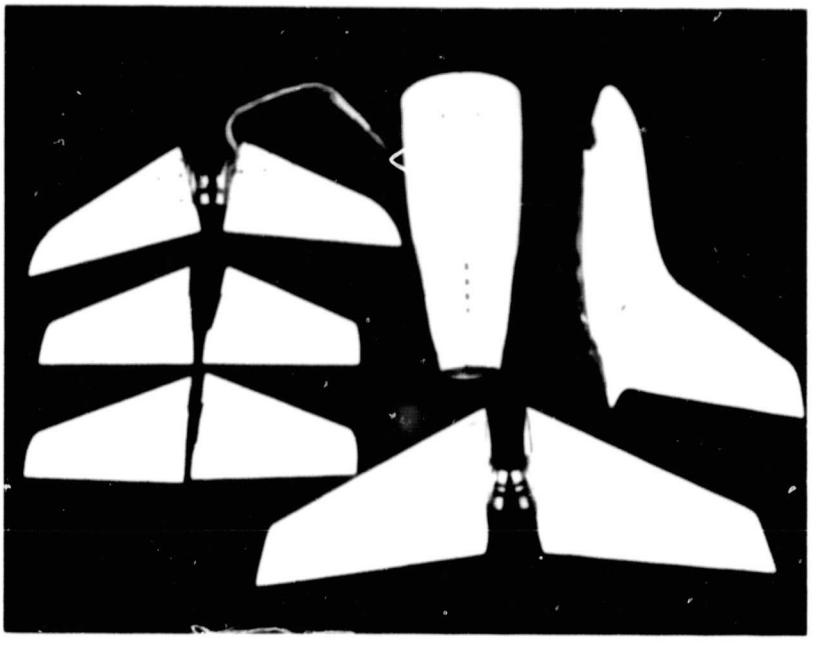

Models of the various horizontal tail configurations have been constructed for low-speed and high-speed wind-tunnel testing.

NASA/LOCKHEED AIRCRAFT ENERGY EFFICIENCY

WIND-TUNNEL DATA BASE

TEST	DESCRIPTION	H_{8C}	H_{16}	H_{17}	H_{18}
S-387 CALAC 4' T/ST	HORIZONTAL TAIL DRAG AT CRUISE MACH NUMBERS	X	X	X	X
N-337 AMES 12' PT	COMPLETE LOW-SPEED FORCE DATA AT HIGH REYNOLDS NO.	X			X
N-340 CALSPAN 8' TPT	COMPLETE HIGH-SPEED FORCE & H.T. PRESSURE DATA	X			X
N-336 LANGLEY 8' TPT	COMPLETE HIGH-SPEED FORCE & H.T. PRESSURE DATA	X			X
L-442 CALAC LSWT	COMPLETE LOW-SPEED FORCE DATA AT LOW REYNOLDS NO.			X	
L-429 CALAC LSWT	LOW-SPEED FORCE & H.T. PRESSURE DATA AT LOW REYNOLDS NO.			X	
L-404 CALAC LSWT	LOW-SPEED FORCE DATA AT LOW REYNOLDS NO.	X	X		
N-307 CALSPAN 8' TPT	LIMITED HIGH-SPEED FORCE DATA IN CRUISE - NO ELEVATOR		X		

Aerodynamic characteristics of the various small horizontal tail configurations have been investigated in four high-speed and four low-speed tests dating back to April 1976. The first two tests were a high-speed and low-speed test of H_{16} performed under Lockheed Independent Development funding.

The next two tests were performed under Phase I contract funding to evaluate low-speed maximum lift characteristics of H_{17}. The remaining tests were performed under the current contract to evaluate the high-speed and low-speed, high Reynold's number characteristics of H_{18}.

ORIGINAL PAGE IS
OF POOR QUALITY

NASA/LOCKHEED
AIRCRAFT ENERGY EFFICIENCY

LOW-SPEED LIFT EFFECTIVENESS

LOW REYNOLDS NUMBER

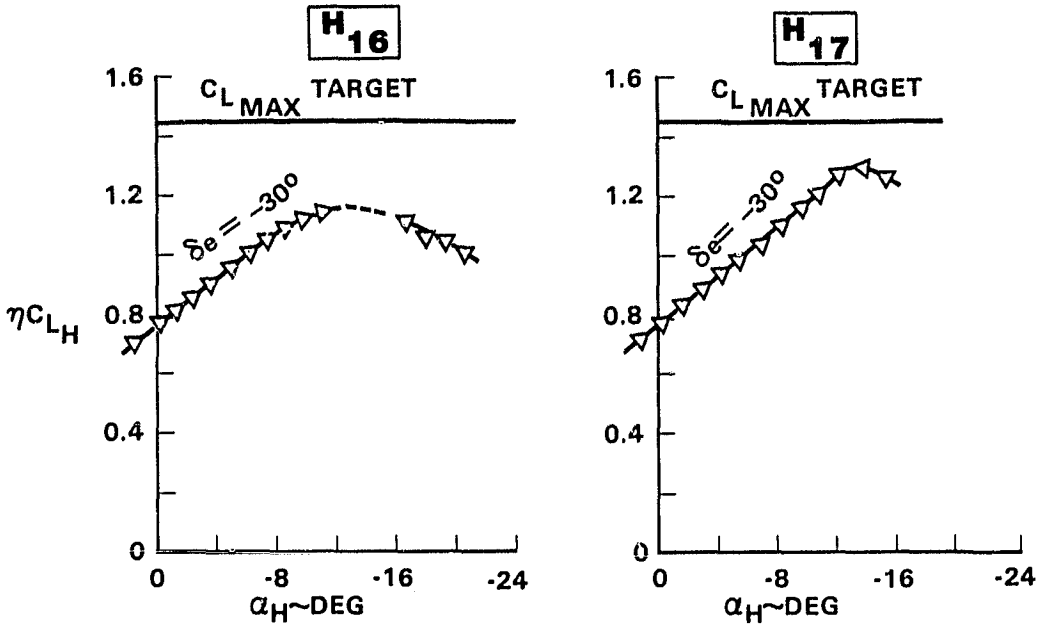

Wind-tunnel data illustrate the low-speed maximum lift deficiency of H_{16} compared to the target value used to size the horizontal tail. H_{17}, designed to improve the lift capability of H_{16}, shows a 13% increase in $C_{L_{max}}$ – still 11% below the target value. However, these tests were performed at low Reynolds number, and the increase in maximum lift with Reynolds number was expected to make up the deficiency shown for H_{17}.

NASA/LOCKHEED
AIRCRAFT ENERGY EFFICIENCY

LOW-SPEED LIFT EFFECTIVENESS

HIGH REYNOLDS NUMBER

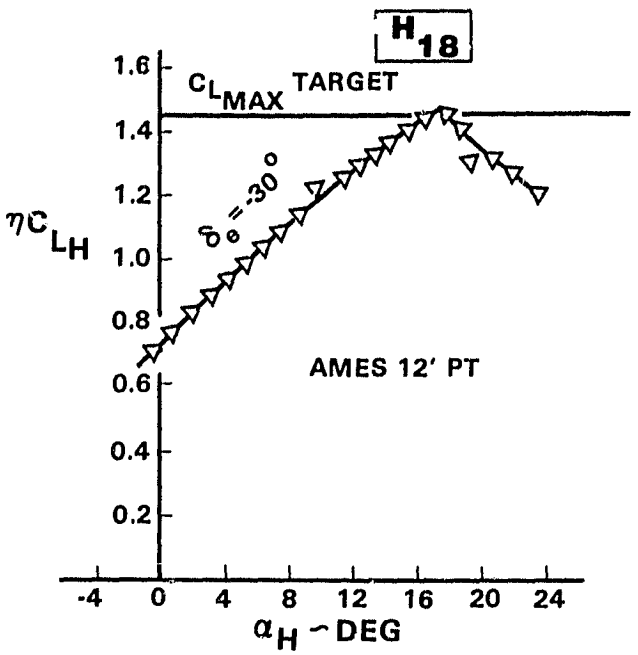

High Reynolds number tests in the NASA/Ames 12-Foot Pressure Tunnel show the maximum lift capability of H_{18} achieving the design target value. Recall that H_{18} is an increased area version of H_{17} with the same airfoil section.

ORIGINAL PAGE IS
OF POOR QUALITY

NASA/LOCKHEED
AIRCRAFT ENERGY EFFICIENCY

TOTAL AIRPLANE DRAG WITH H_{18}

M = 0.

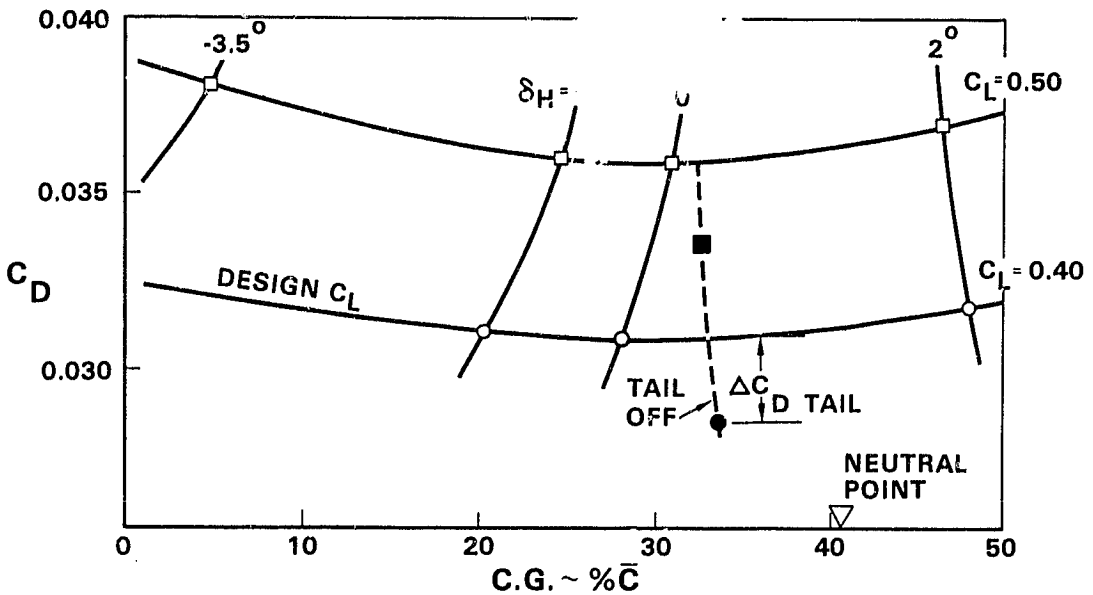

A convenient method of evaluating horizontal tail drag characteristics is by a composite plot of tail-on and tail-off drag coefficient presented as a function of cg location for various lift coefficients. This plot allows the extraction of horizontal tail parasite drag, the drag at zero net lift on the tail, by determining the drag at points of intersection of the tail-off curve with tail-on drag for particular lift coefficients. This is the technique used to extract horizontal tail zero-lift drag from wind-tunnel test data.

NASA/LOCKHEED
AIRCRAFT ENERGY EFFICIENCY

HORIZONTAL TAIL ZERO-LIFT DRAG WIND-TUNNEL TEST

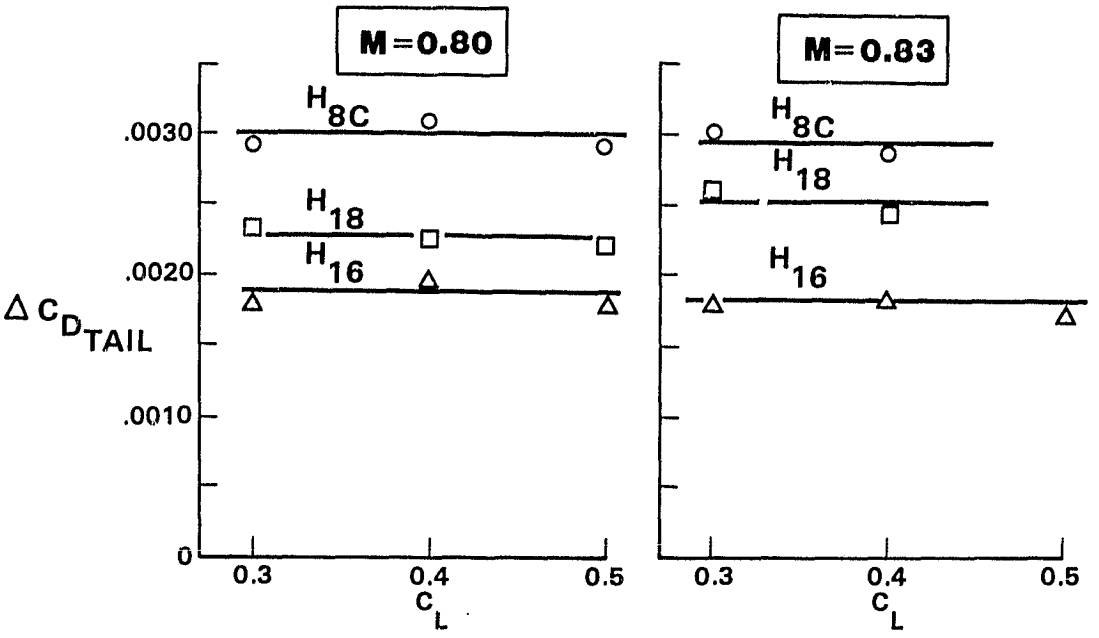

Wind-tunnel extracted zero-lift drag characteristics are shown for horizontal tail models H_{8C}, H_{18} and H_{16} at cruise Mach number and lift conditions. Comparison of data at M = 0.80 and 0.83 clearly illustrate a drag "creep" characteristic for H_{18}. This drag degradation could be attributed to premature shock formation on the surface compared to that which was predicted by the inviscid Jameson-Caughey transonic code FLO-22 method used to design the airfoil.

NASA/LOCKHEED AIRCRAFT ENERGY EFFICIENCY

THEORY COMPARED WITH WIND-TUNNEL TEST

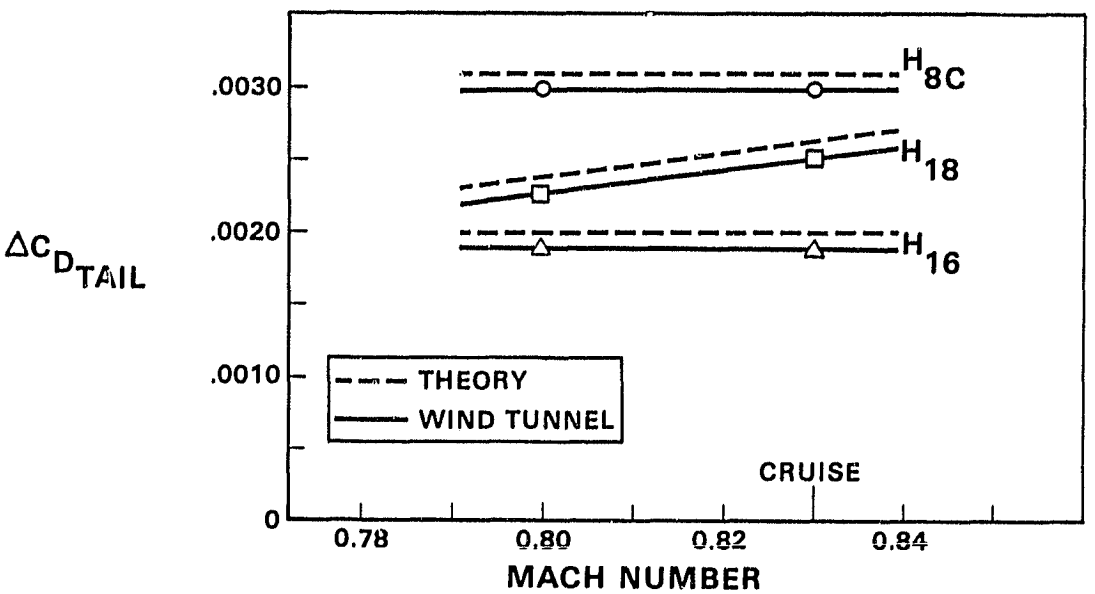

Since the horizontal tail configurations were originally designed, the Jameson-Caughey FLO-22 program has been improved by incorporating a viscous flow capability. This new program, designated FLO-22.5, shows excellent agreement with wind-tunnel extracted horizontal tail drag results, even predicting the drag "creep" characteristic of H_{18}. These results were computed using th. Truckenbrot boundary layer option.

NASA/LOCKHEED
AIRCRAFT ENERGY EFFICIENCY

TAIL DRAG VARIATION WITH REYNOLDS NUMBER

(FLO 22.5 RESULTS)

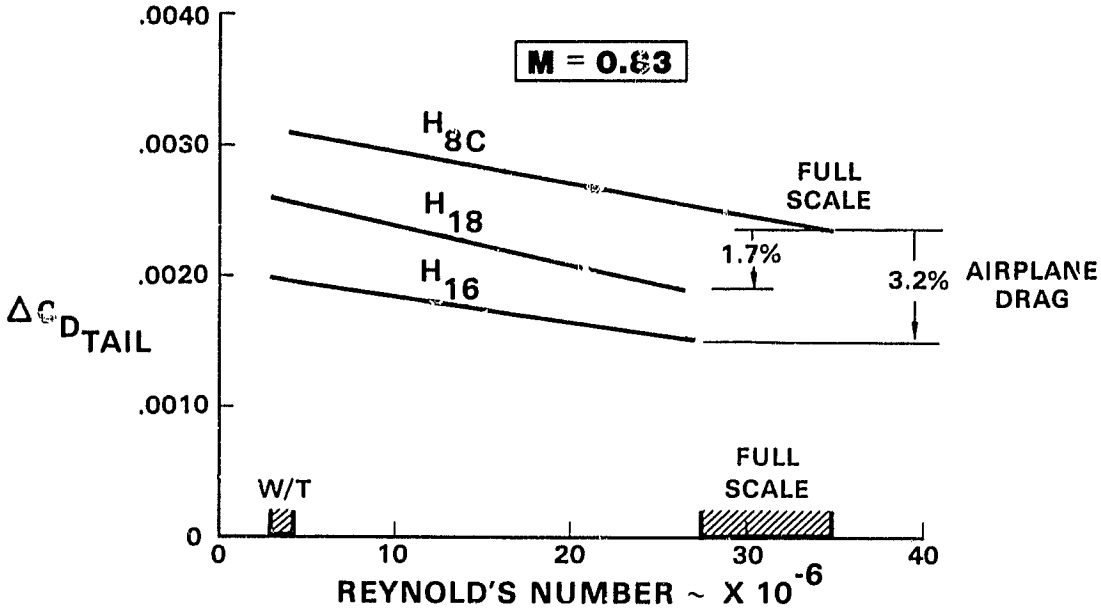

Verification of the viscous Jameson-Caughey FLO 22.5 program as a valuable analysis tool provides a method for computing horizontal tail drag characteristics at full scale flight conditions. Computed results are shown for wind-tunnel test conditions and full-scale flight at cruise conditions (only the end-points were computed) for the standard H_{8C} tail and the H_{18} and H_{16} small tails. The data illustrate the drag advantages of the H_{16} tail compared to the H_{18} configuration. At full scale cruise conditions, H_{16} offers a total airplane drag reduction of 3.2% whereas the drag reduction for H_{18} is only half as much.

NASA/LOCKHEED AIRCRAFT ENERGY EFFICIENCY

POTENTIAL DRAG SAVINGS - AFT BALANCE

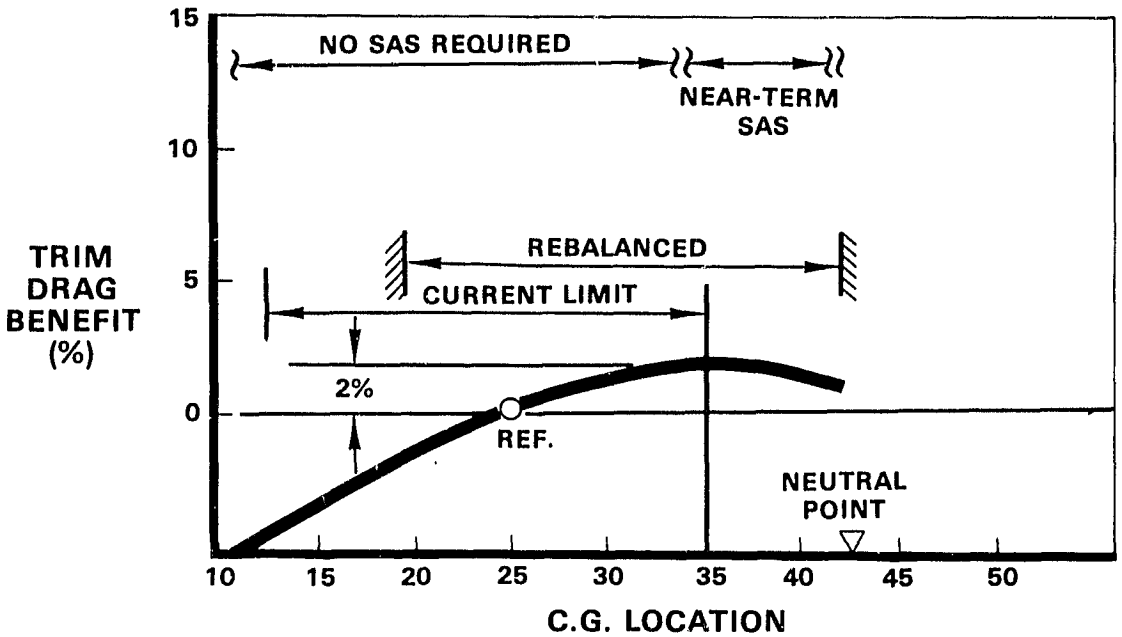

An aft shift of the cg range of 5% to 6% would result in a relaxed static stability configuration offering about 2% reduction in trim drag. This would move the cg range into the region where a near term augmentation system would be required. One method of achieving this shift is with an aft fuel tank.

NASA/LOCKHEED AIRCRAFT ENERGY EFFICIENCY

AFT FUEL TANK

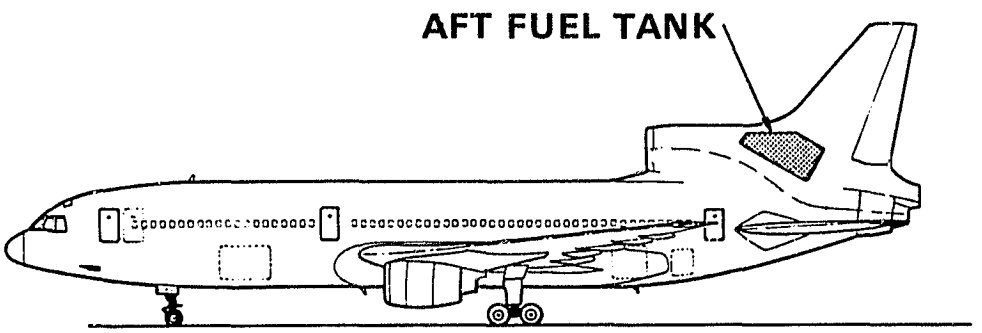

One method of incorporating an aft fuel tank in the L-1011 is currently under study. This slipper tank, located above the center engine S-duct, will result in a cg shift of about 6%. This is sufficient to move the aft cg limit to a near-neutral stability condition and bias the reference cg to the point of minimum trim drag.

NASA/LOCKHEED

AIRCRAFT ENERGY EFFICIENCY

ADVANCED TECHNOLOGY WING

ORIGINAL PAGE IS
OF POOR QUALITY

NASA/LOCKHEED
AIRCRAFT ENERGY EFFICIENCY

ADVANCED TECHNOLOGY WING MODEL

The Lockheed 1/30th scale advanced technology wing model is shown mounted in the NASA/Ames 14-Foot Transonic Wind Tunnel. This test was conducted in April 1979.

NASA/LOCKHEED
AIRCRAFT ENERGY EFFICIENCY

DRAG POLAR COMPARISON

TAIL OFF

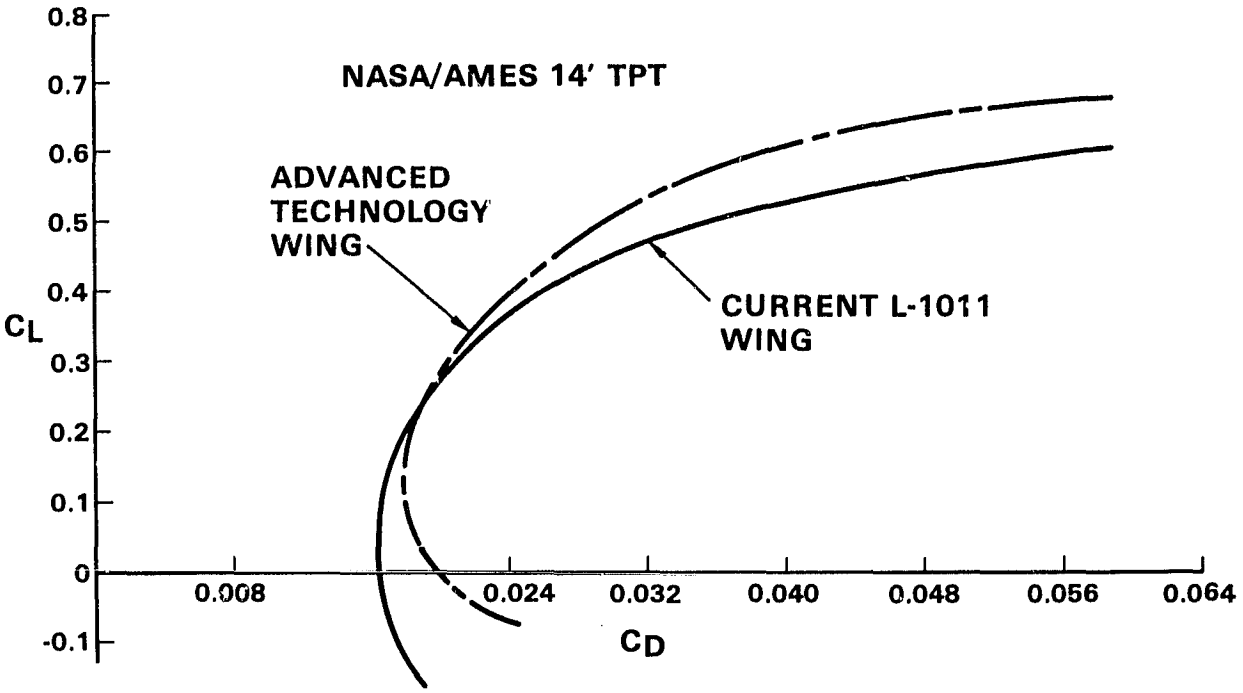

The improved L/D of the advanced technology wing is illustrated by these drag polar plots of data obtained from the NASA/Ames 14-Foot Wind Tunnel.

ORIGINAL PAGE IS
OF POOR QUALITY

NASA/LOCKHEED
AIRCRAFT ENERGY EFFICIENCY

TOTAL AIRPLANE WIND-TUNNEL DRAG ADVANCED TECHNOLOGY WING WITH H_{8C}

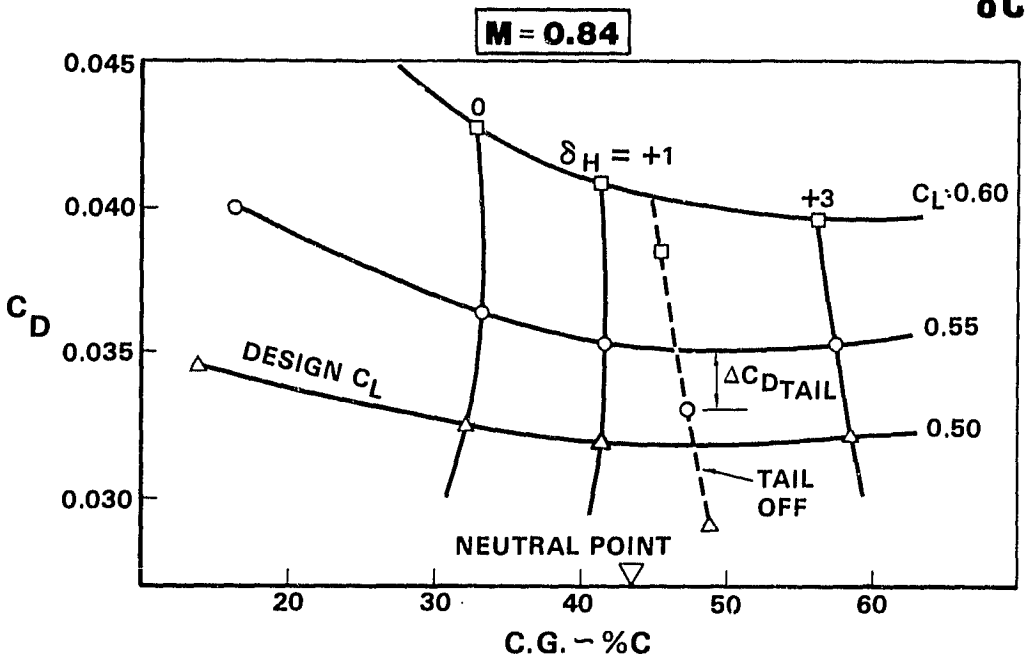

The more negative pitching moment characteristic of an advanced technology wing requires a cg location for minimum drag resulting in a statically unstable airplane. This is illustrated by noting neutral point location on this plot of drag coefficient versus cg location for various lift coefficients. These data are from the NASA/Ames 14-Foot Wind-Tunnel test. The locus of tail-off points on this plot shows that minimum drag occurs at design C_L when there is zero net lift on the tail. However, at an increased off-design C_L minimum drag occurs when the tail is somewhat uploaded.

NASA/LOCKHEED
AIRCRAFT ENERGY EFFICIENCY

WING TECHNOLOGY-AUGMENTATION REQUIREMENTS

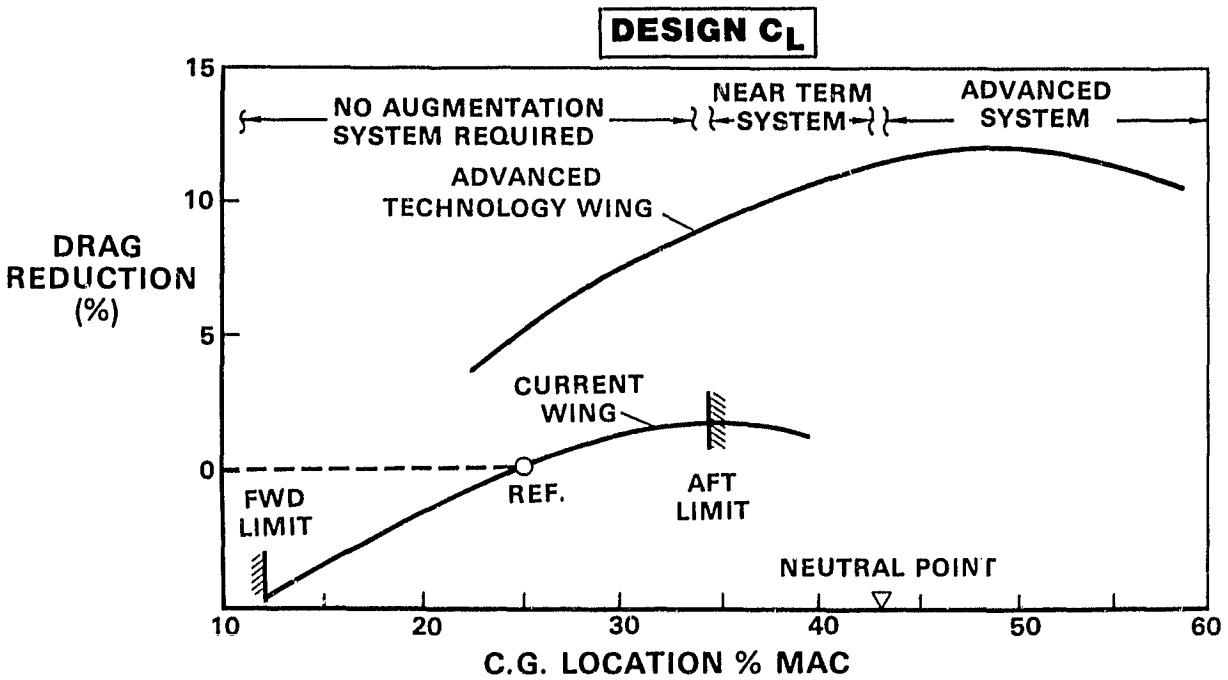

The advanced technology wing offers a trim drag benefit of 12% compared to the current L-1011 with conventional balance. However, in order to realize this benefit, the cg range of an advanced technology wing must be biased aft to the point where the airplane is statically unstable at minimum drag. The neutral point location on the advanced technology wing is essentially the same as on the current L-1011 wing since the planform is the same.

NASA/LOCKHEED AIRCRAFT ENERGY EFFICIENCY

LIFTING TAIL BALANCE

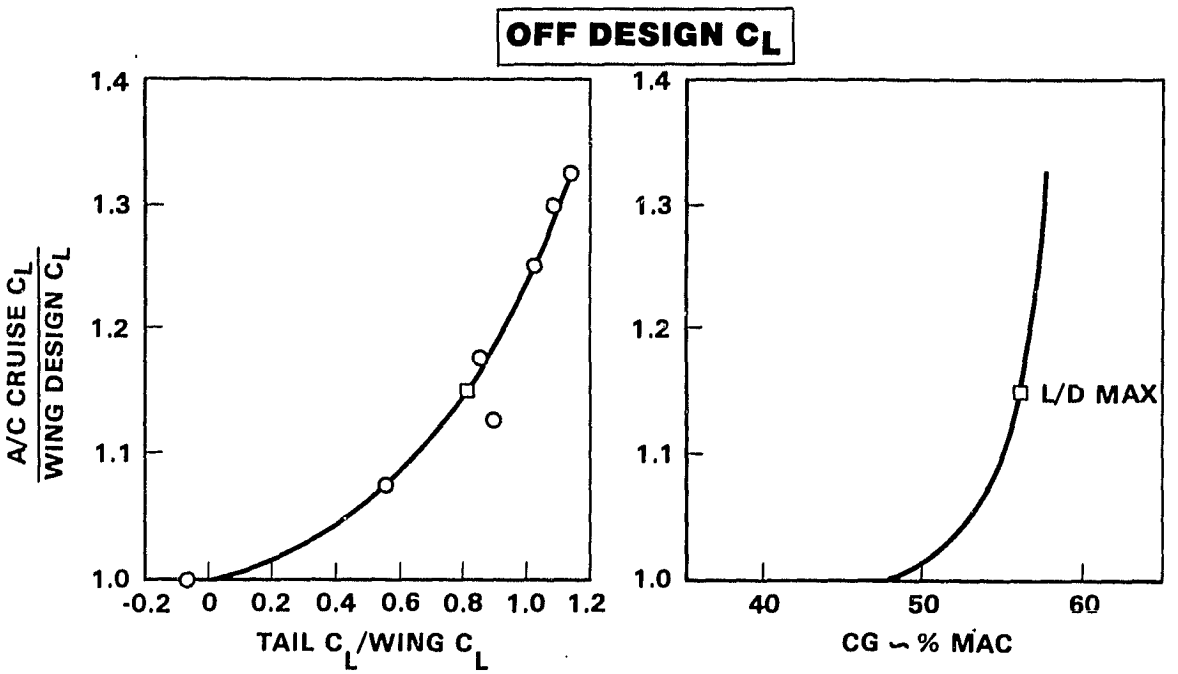

At an increased off-design C_L of 30% above the design value, it is necessary to bias the trim cg location aft as much as 10% farther to reach the minimum trim drag condition. This results in a 15% unstable configuration. Also, to reach this minimum drag condition, it is necessary to upload the tail to a lift coefficient about equal to that of the wing.

NASA/LOCKHEED AIRCRAFT ENERGY EFFICIENCY

NOSE DOWN CONTROL REQUIREMENTS

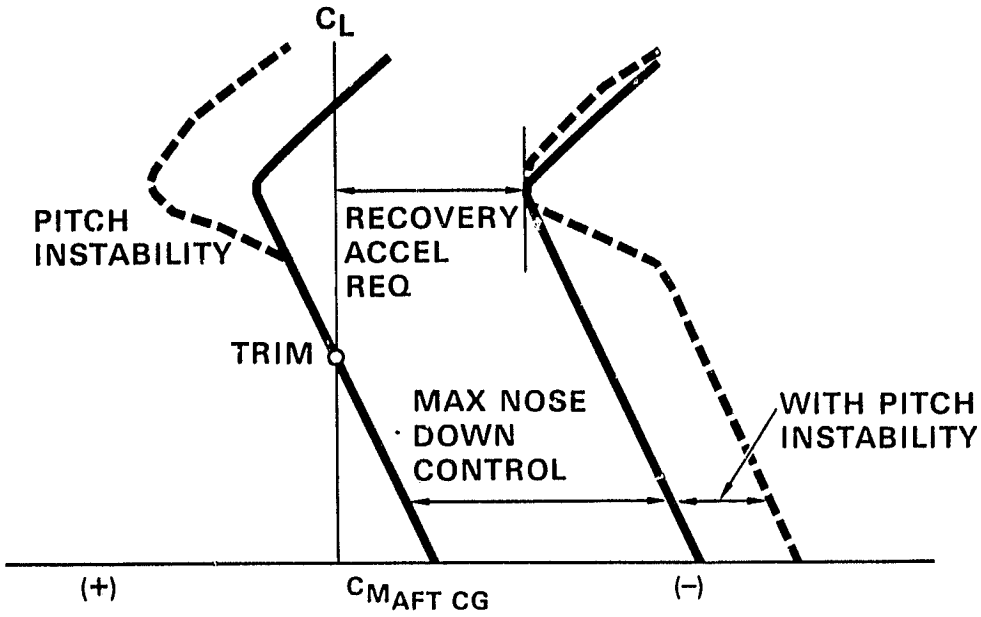

As a result of designing a swept subsonic wing for best cruise performance at high Mach number, there is a strong tendency for some high angle of attack pitch instability to occur. This tendency not only defines a requirement for control system authority, it also could size the aerodynamic control power required from the horizontal stabilizing and control surface. This places additional demands on the design of a stability and control augmentation system.

NASA/LOCKHEED AIRCRAFT ENERGY EFFICIENCY

ADVANCED TECHNOLOGY TRANSPORTS

- AIRFRAME IS STATICALLY UNSTABLE AT MINIMUM TRIM DRAG
- FULL TIME STABILITY AND CONTROL AUGMENTATION REQUIRED
- MINIMUM DRAG FOR GROWTH AIRCRAFT REQUIRES:
  - INCREASED STATIC INSTABILITY
  - LIFTING HORIZONTAL TAIL
- NONLINEAR PITCH INSTABILITY REQUIRES INITIAL DESIGN ACTIVE CONTROL INTEGRATION

Because of the aft balance required for an advanced technology wing, resulting in a statically unstable configuration for optimum cruise, full-time stability and control augmentation is required. This condition is aggravated at off-design lift conditions requiring an even farther aft balance with a lifting horizontal tail. Also, the high angle-of-attack pitch instability resulting from an optimum cruise wing design requires initial consideration in the stability and control augmentation system design.

NASA/LOCKHEED

AIRCRAFT ENERGY EFFICIENCY

RELAXED STABILITY FLIGHT TEST

NASA/LOCKHEED AIRCRAFT ENERGY EFFICIENCY

FLIGHT TEST OBJECTIVES

- DEMONSTRATE RELAXED STATIC STABILITY FOR COMMERCIAL TRANSPORT APPLICATION
- VERIFY FLIGHT CONTROL SYSTEM CONCEPTS AT NEAR NEUTRAL STABILITY CONDITIONS
  - NEAR TERM SYSTEM
  - ADVANCED SYSTEM
- EVALUATE HANDLING QUALITIES OF BOTH SYSTEMS

The objective of the flight test program is to demonstrate the concept of relaxed static stability for commercial transport application. This will be done by modifying the Lockheed L-1011 S/N 1001 flight test airplane to incorporate two different types of augmentation system, near-term and advanced systems, and by evaluating the handling qualities of both of these systems at near neutral stability conditions.

NASA/LOCKHEED AIRCRAFT ENERGY EFFICIENCY

FLIGHT TEST REQUIREMENTS

- BIAS THE C.G. AFT USING BALLAST TO REDUCE STATIC MARGIN
- DOWNRIG THE ELEVATOR TO PROVIDE SUFFICIENT NOSE-DOWN CONTROL FOR RELAXED STATIC STABILITY CONDITIONS

The flight test airplane will utilize water ballast to bias the cg aft to locations approaching the near neutral stability condition. In order to ensure safety of flight at these relaxed stability conditions, it will be necessary to downrig the elevator to provide sufficient nose-down control capability at aft cg.

ORIGINAL PAGE IS
OF POOR QUALITY

NASA/LOCKHEED
AIRCRAFT ENERGY EFFICIENCY

L-1011 S/N 1001 PROPOSED BALLAST LOCATIONS

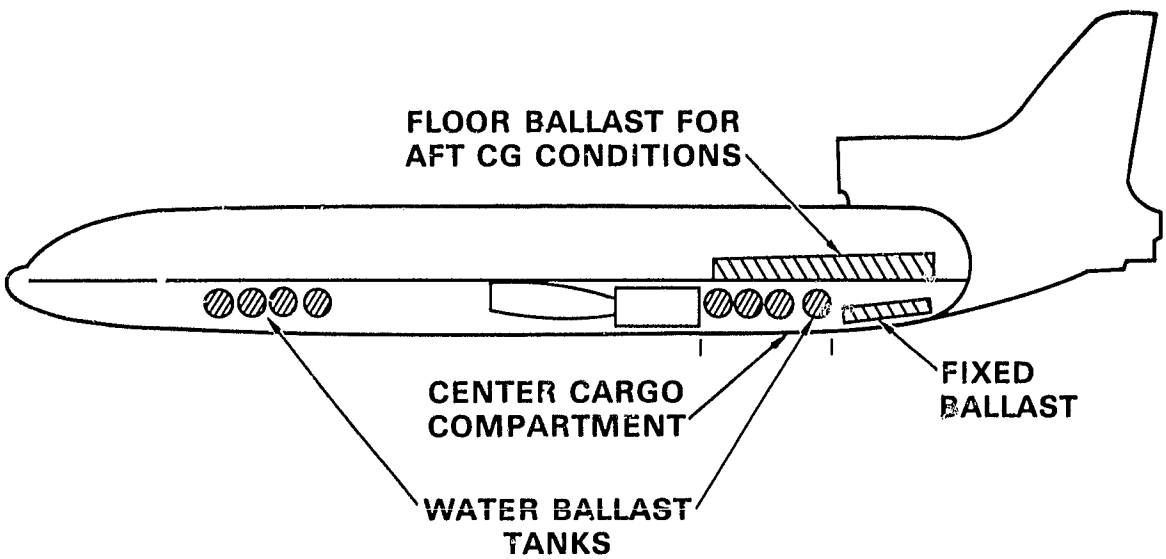

The proposed ballast for the flight test airplane consists of transferrable water ballast and fixed ballast. The water ballast is contained in tanks, 8 in the center cargo compartment and 8 in the forward cargo compartment. Each tank has a capacity of 2000 lbs. of water. Pumps and interconnecting plumbing would allow water to be transferred between the tanks in the 2 cargo compartments. The fixed ballast consists of a high-density material such as lead fixed to the passenger floor and the floor of the aft cargo compartment.

CENTER OF GRAVITY TRAVEL

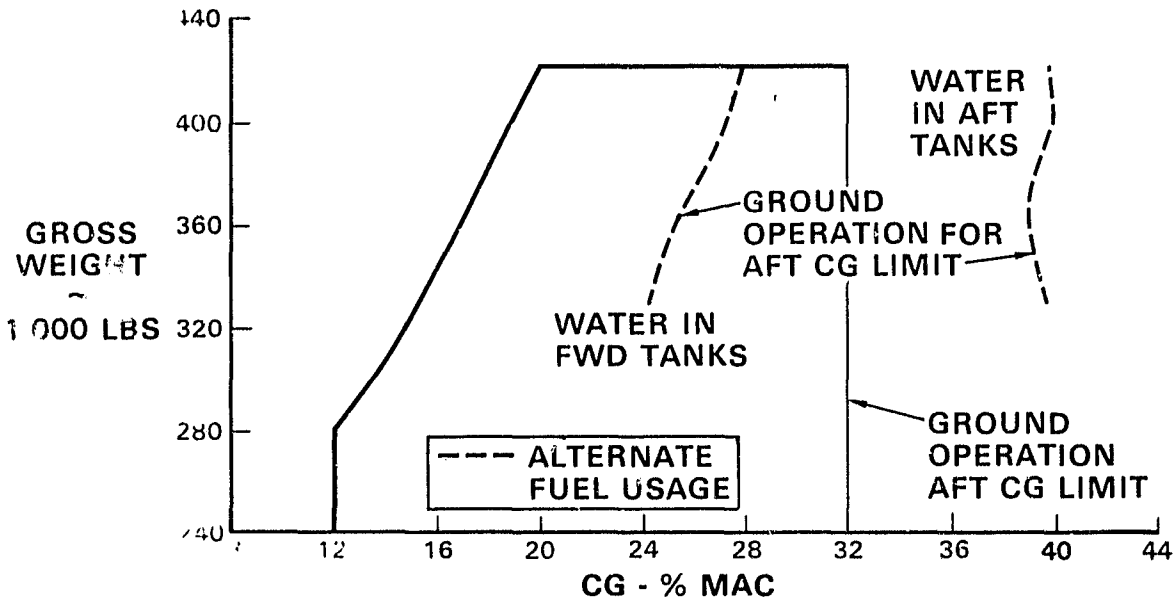

At takeoff, the water tanks in the forward cargo compartment would contain a full load of 16,000 lbs. of water, while the tanks in the center cargo compartment would be empty. This insures that the aircraft center of gravity is well forward of 32% MAC, the ground operation aft limit. After takeoff the entire 16,000 lbs. of water is transferred to the tanks in the center cargo compartment so that flight tests at the inflight aft cg limit may be accomplished. The dotted line shows center of gravity variation as fuel is burned off.

NASA/LOCKHEED
AIRCRAFT ENERGY EFFICIENCY

NOSE-DOWN CONTROL REQUIREMENTS IN CRUISE

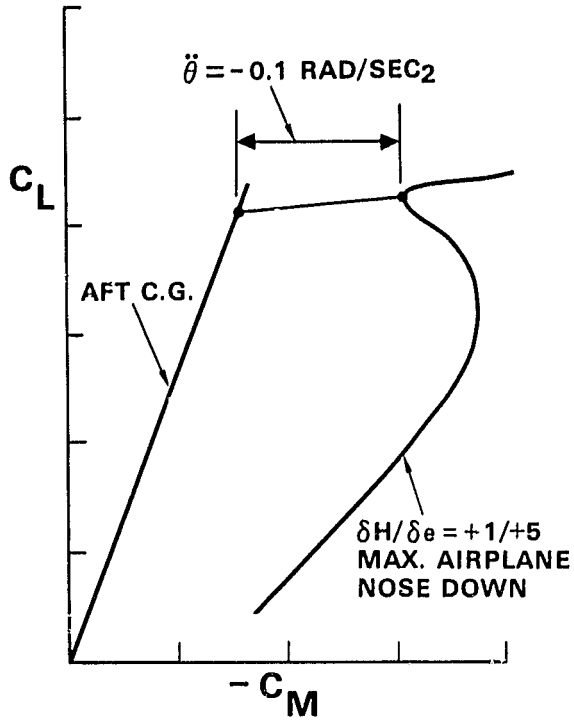

An elevator downrig is defined to provide an adequate level of nose-down control for the relaxed static stability conditions proposed for flight test. The elevator downrig provides a nose-down angular acceleration margin of -0.1 rad/sec^2 at the critical high angle of attack condition shown. This level of nose-down control capability has been found to be completely satisfactory in flight tests of the L-1011 at sensitive aft cg conditions.

NASA/LOCKHEED AIRCRAFT ENERGY EFFICIENCY

STABILIZER/ELEVATOR GEARING

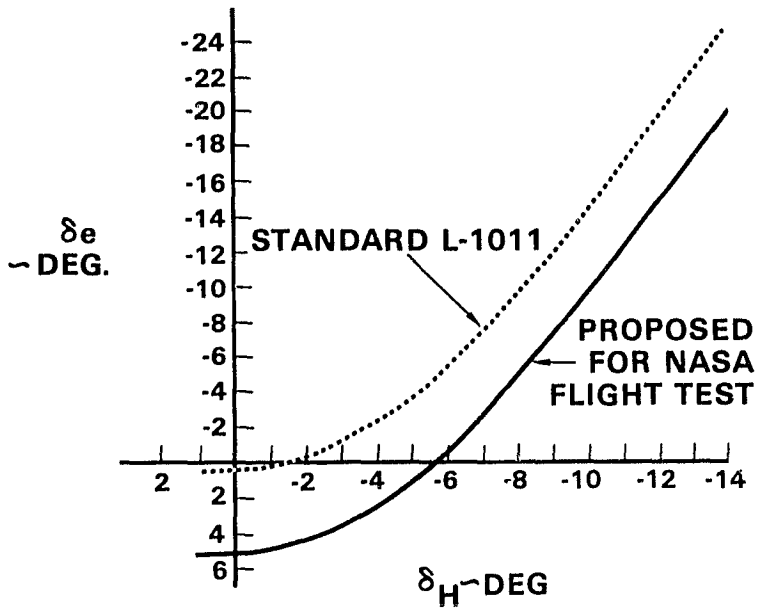

Analysis shows that an elevator downrig of 5° is sufficient to provide the nose-down control required at critical high-speed, high angle of attack conditions. The stabilizer/elevator gearing is shown along with the standard L-1011 gearing.

NASA/LOCKHEED

AIRCRAFT ENERGY EFFICIENCY

WIND-TUNNEL PLAN

NASA LOCKHEED AIRCRAFT ENERGY EFFICIENCY

WIND-TUNNEL TEST OBJECTIVES

FLIGHT TEST SUPPORT

- VERIFY HIGH - α NOSE-DOWN CONTROL CAPABILITY
  - HIGH MACH PITCH INSTABILITY
  - LOW SPEED STALL RECOVERY
- DETERMINE EFFECT OF ELEVATOR DOWNRIG ON STABILIZER/ELEVATOR HINGE MOMENTS

ADVANCED CONTROL CONCEPTS

- DEVELOP OPTIMAL TRIM AND BALANCE CONCEPT FOR FUTURE APPLICATIONS
  - LIFTING HORIZONTAL TAILS
  - CANARDS

The objectives of the forthcoming wind-tunnel tests are to provide flight test support and to further investigate optimal trim and balance concepts for application to future advanced technology wing aircraft. In support of the flight program, wind-tunnel tests will verify the nose-down control capability of the test airplane with elevator downrig at critical high speed and low-speed conditions. The effect of elevator downrig on stabilizer/elevator hinge moments will also be measured during these tests. In the area of research for future application, the advanced technology wing model will be tested to evaluate various forward and aft mounted control surface concepts. Wind-tunnel data are currently unavailable for commercial transport type aircraft with canard surfaces.

ORIGINAL PAGE IS
OF POOR QUALITY

NASA LOCKHEED
AIRCRAFT ENERGY EFFICIENCY

WIND-TUNNEL MODEL COMPONENTS

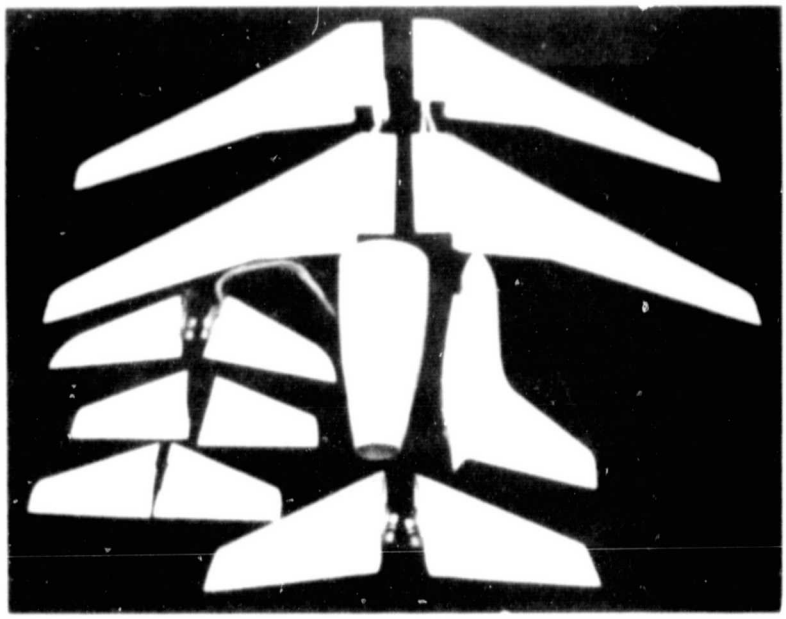

A number of model components are already available for the wind-tunnel test program. These components include:

- Standard L-1011 wing
- Advanced technology wing
- Standard L-1011 tail
- Three small tail configurations

Also shown are the fuselage boat-tail and the vertical tail with plugged center engine components.

Modifications will be made to the model components to allow the measurement of stabilizer/elevator hinge moments and to allow forward and aft mounting of the control surfaces.

NASA/LOCKHEED AIRCRAFT ENERGY EFFICIENCY

WIND-TUNNEL TEST PROGRAM

PURPOSE	WIND-TUNNEL	DATE
FLIGHT TEST SUPPORT L-1011-1 WITH DOWNRIGGED ELEVATOR	CALSPAN (HIGH-SPEED)	DEC '80
	CALAC LSWT (LOW-SPEED)	FEB '81
ADVANCED WING AND CONTROL SURFACE CONCEPTS CONFIGURATION MATRIX	CALSPAN (HIGH-SPEED)	FEB '81
	CALAC LSWT (LOW-SPEED)	MAY '81 (APPROX)
2ND ENTRY: FINAL CONFIGURATION	CALSPAN (HIGH-SPEED)	OCT '81
	? HI-RN (LOW-SPEED)	DEC '81 (APPROX)

Two wind-tunnel tests will be performed to support flight test: a high-speed test in the Calspan 8' Transonic Tunnel in December 1980 and a low-speed test in the Calac 8' X 12' LSWT in February 1981.

The advanced wing and control surface concepts will be tested in two high-speed and two low-speed tests: the first series to investigate a matrix of configurations, the second to evaluate a final configuration.

NASA/LOCKHEED

AIRCRAFT ENERGY EFFICIENCY

PILOTED FLIGHT SIMULATION

NASA/LOCKHEED
AIRCRAFT ENERGY EFFICIENCY

FLIGHT SIMULATION OBJECTIVES

- PREFLIGHT TEST PILOT FAMILIARIZATION
- FLIGHT TEST PLAN DEFINITION
- SAFETY OF FLIGHT VERIFICATION
- PILOT/SYSTEM INTERFACE PROBLEMS IDENTIFICATION
- FINAL PREFLIGHT HANDLING QUALITIES EVALUATION

A flight simulation will be performed prior to flight test for purposes of pilot familiarization. The simulation will also serve to help formulate and finalize the flight test plan. Critical flight conditions and failure situations will be probed to verify safety of flight.

Pilot-in-the-loop simulation will also help identify any pilot/interface problems. The result of piloted simulation will be a final preflight handling qualities evaluation.

NASA/LOCKHEED
AIRCRAFT ENERGY EFFICIENCY

FLIGHT SIMULATION CAB AND MOTION SYSTEM

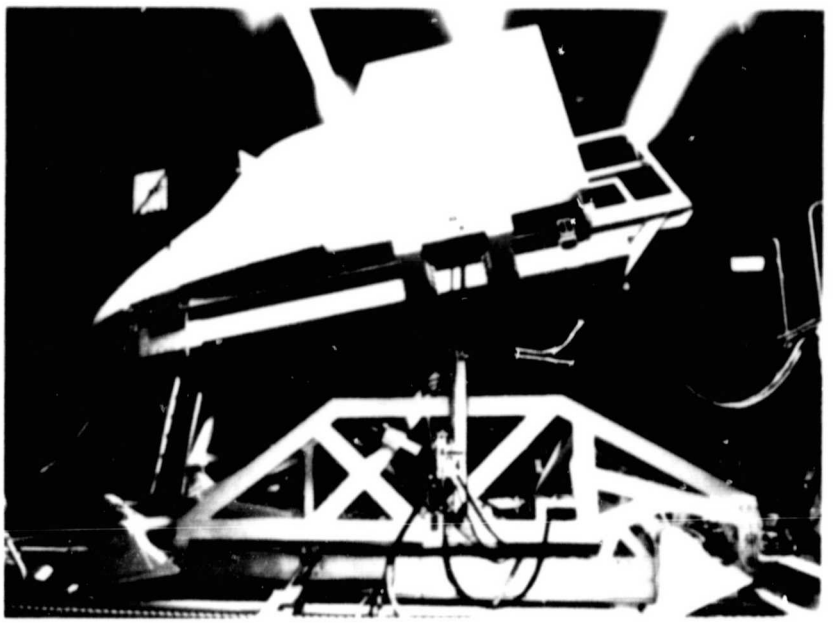

The Lockheed Rye Canyon Flight Simulator contains all the components necessary to conduct a complete man and/or equipment in the loop real time aircraft simulation. The components include: digital and hybrid-analog computers, cockpits with instrument displays, visual displays, motion system sound synthesizer, complete computer software library, and a highly experienced simulation staff. The hydraulically driven, four-degree-of-freedom motion system features independent movement in pitch, roll, heave and lateral directions.

ORIGINAL PAGE IS
OF POOR QUALITY

NASA/LOCKHEED
AIRCRAFT ENERGY EFFICIENCY

FLIGHT SIMULATOR COCKPIT INTERIOR

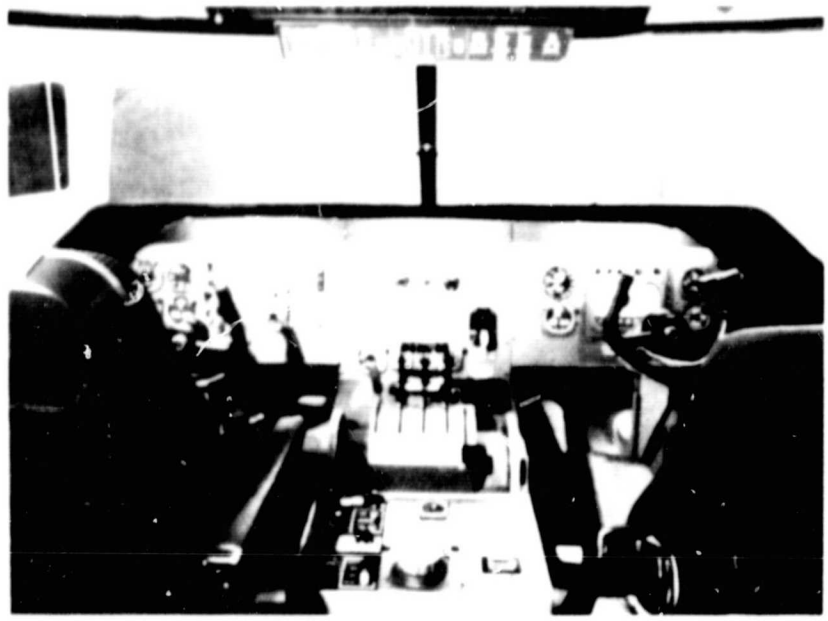

The flight simulator cockpit interior provides a realistic Category III environment for both the pilot and copilot with all necessary controls, instruments, and indicators to accurately duplicate manual and automatic flight control.

NASA/LOCKHEED AIRCRAFT ENERGY EFFICIENCY

FLIGHT SIMULATOR PROGRAM

	NEAR-TERM SYSTEM	ADVANCED SYSTEM
	STATE-OF-THE-ART SYSTEM FOR POSITIVE TO NEAR NEUTRAL STABILITY APPLICATION	STABILITY & CONTROL COMMAND AUGMENTATION FOR UNSTABLE APPLICATIONS
SYSTEM DEFINITION	LAGGED PITCH RATE DAMPER WITH PILOT FEED FORWARD	TO BE DETERMINED
DESIGN CRITERIA	PROVIDE EQUIVALENT OR IMPROVED L-1011 MODAL & TIME HISTORY RESPONSE CHARACTERISTICS	
FLIGHT SIMULATION	CONCEPT SIMULATION OCT '77 HARDWARE SIMULATION MAR '81	CONCEPT SIMULATION MAR '81 HARDWARE SIMULATION NOV '81

Flight simulation will be performed for both the near-term and advanced control systems. Previous piloted simulation of the near-term system under the Phase I contract involved only a concept evaluation in October 1977. Currently planned simulation under the Phase II contract will involve two entries. The first entry in March 1981 will simulate the final near-term system hardware definition; a preliminary concept evaluation of the advanced system will also be performed during this entry. A second entry in November 1981 will simulate the final advanced system hardware definition.

NASA/LOCKHEED

AIRCRAFT ENERGY EFFICIENCY

AVIONICS DESIGN AND ANALYSIS

DICK HEIMBOLD

NASA/LOCKHEED

AIRCRAFT ENERGY EFFICIENCY

NEAR TERM FCS

NASA/LOCKHEED
AIRCRAFT ENERGY EFFICIENCY

CONTROL SYSTEM ANALYSIS

- TWO SYSTEMS SYNTHESIZED
  - NORMAL ACCELERATION FEEDBACK
  - PITCH RATE FEEDBACK
- FEED FORWARD LOOP NECESSARY

During synthesis of the near-term flight control system, two systems were evaluated. Basic differences between these systems was the choice of motion sensors. Normal acceleration and pitch rate were considered in this application. Analysis showed that a feed forward was required for either system.

NASA/LOCKHEED AIRCRAFT ENERGY EFFICIENCY

DUAL APPROACH RATIONALE

- NORMAL ACCELERATION ALREADY IN ACTIVE CONTROL SYSTEM. NO NEW SENSORS REQUIRED
- PITCH RATE CONVENTIONAL STABILITY AUGMENTATION

Normal accelerometers are already installed in the L-1011 as part of the Active Control System used for wing load alleviation. These sensors are considered to have better life characteristics than rate gyros.

Pitch rate gyros as motion sensors have been used for years as basic motion sensors for stability augmentation and can be expected to give predictable and satisfactory results.

NASA/LOCKHEED AIRCRAFT ENERGY EFFICIENCY

NEAR TERM FCS - AUTOPILOT DISENGAGED

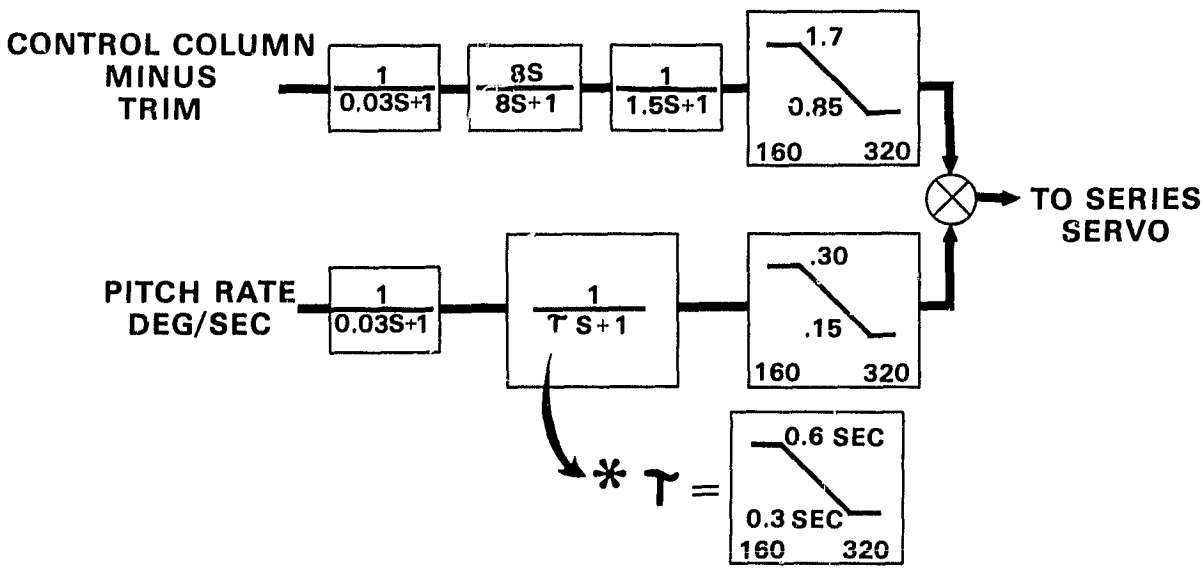

Control and stability augmentation for manual control are provided in the near term FCS. The gains of both the feed-forward loop and the pitch rate feedback loop are scheduled as a function of indicated airspeed to provide the greater stabilizer movement required at slow speed. The pitch rate feedback time constant is also scheduled to be consistent with the response time of the aircraft.

NEAR TERM FCS - AUTOPILOT ENGAGED

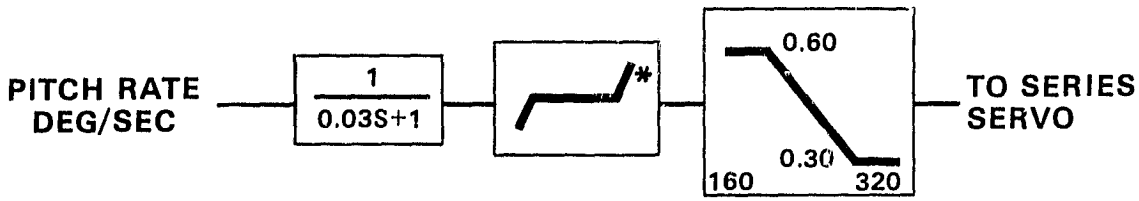

* ± 1.4°/SEC IN CRUISE
± 5°/SEC W/FLAPS DOWN

The near-term flight control system provides additional stability augmentation to the aircraft when under autopilot control. Gain scheduling and a switched dead-band in the pitch rate feedback loop are used in this particular mode.

NASA/LOCKHEED
AIRCRAFT ENERGY EFFICIENCY

LOW FREQUENCY STABILITY - 40% MAC

TIME TO DOUBLE AMPLITUDE

	UNAUGMENTED	PITCH RATE SAS	ACCELEROMETER SAS
APPROACH:	25.7 SEC	46.2 SEC	20.6 SEC
CRUISE:	77 SEC	STABLE	STABLE

Evaluation of performance of the two configurations revealed a reduction in the low frequency (phugoid) stability for the normal acceleration feedback. Since this reduction in "time to double amplitude" for the approach flight condition would tend to degrade rather than improve performance, the decision has been made to drop the normal acceleration system and concentrate on the pitch rate system.

NASA/LOCKHEED
AIRCRAFT ENERGY EFFICIENCY

SHORT PERIOD ROOT LOCUS -CRUISE-

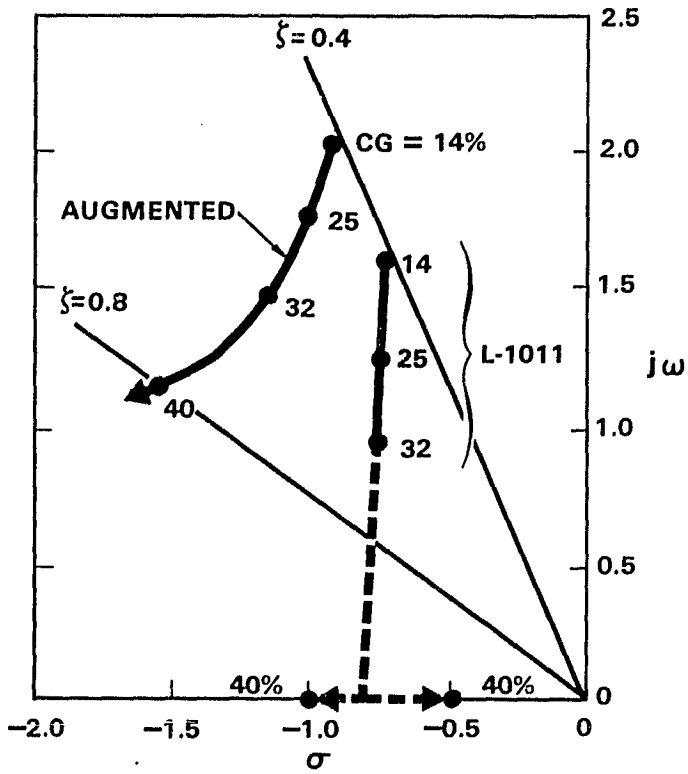

Root-Locus plots for the near-term pitch rate FCS at a nominal cruise flight condition reveals an improvement in short period response compared to the basic L-1011. Short period frequency is increased and damping ratios are maintained between 0.4 and 0.8 for cg locations between 14% and 40% MAC.

NASA/LOCKHEED
AIRCRAFT ENERGY EFFICIENCY

SHORT PERIOD ROOT LOCUS —APPROACH—

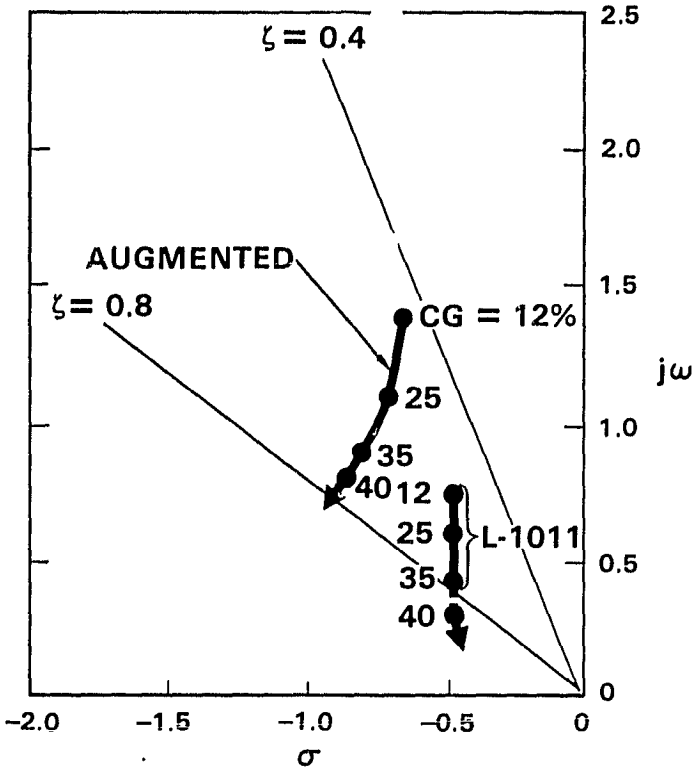

Root-Locus plots for the near-term FCS at a nominal approach flight condition also reveals an improvement of the short period response.

NASA/LOCKHEED
AIRCRAFT ENERGY EFFICIENCY

PHUGOID ROOT LOCUS -CRUISE-

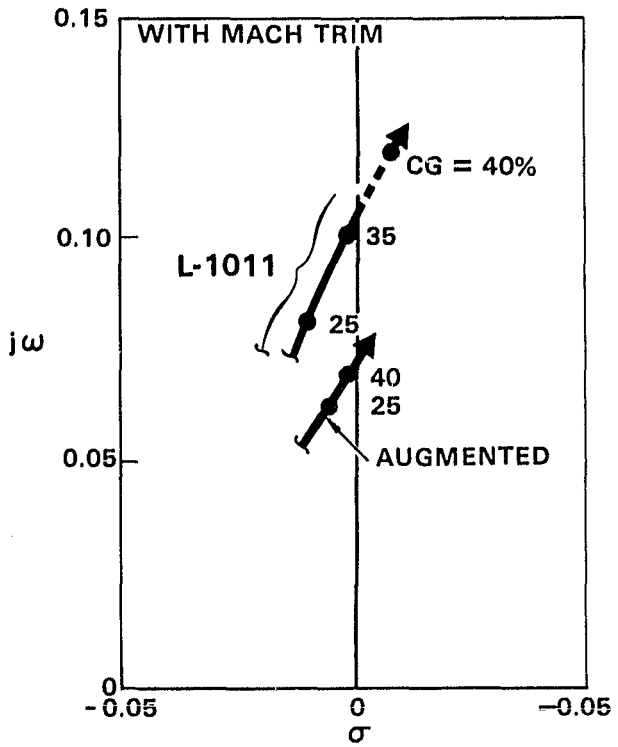

Root Locus plots without the stability augmentation reveal a phugoid instability at cruise condition with the cg at 40%. Addition of the near term FCS results in elimination of that low frequency instability.

NASA/LOCKHEED
AIRCRAFT ENERGY EFFICIENCY

PHUGOID ROOT LOCUS -APPROACH-

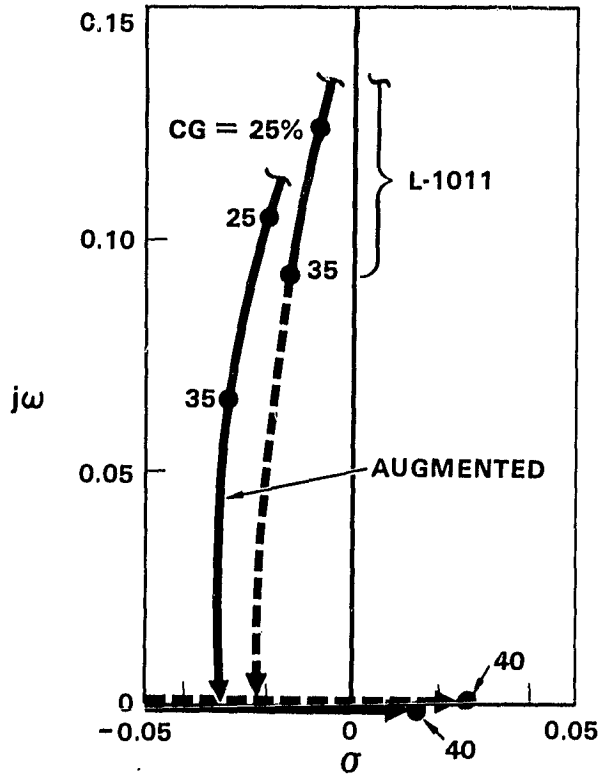

The phugoid instability of the approach flight condition with the cg beyond present existing limit (at 40%) is not eliminated but is significantly improved, in that the time to double amplitude is almost doubled. This allows easier pilot control of this low frequency instability.

NASA/LOCKHEED AIRCRAFT ENERGY EFFICIENCY

CURRENT ACTIVE CONTROL SYSTEM

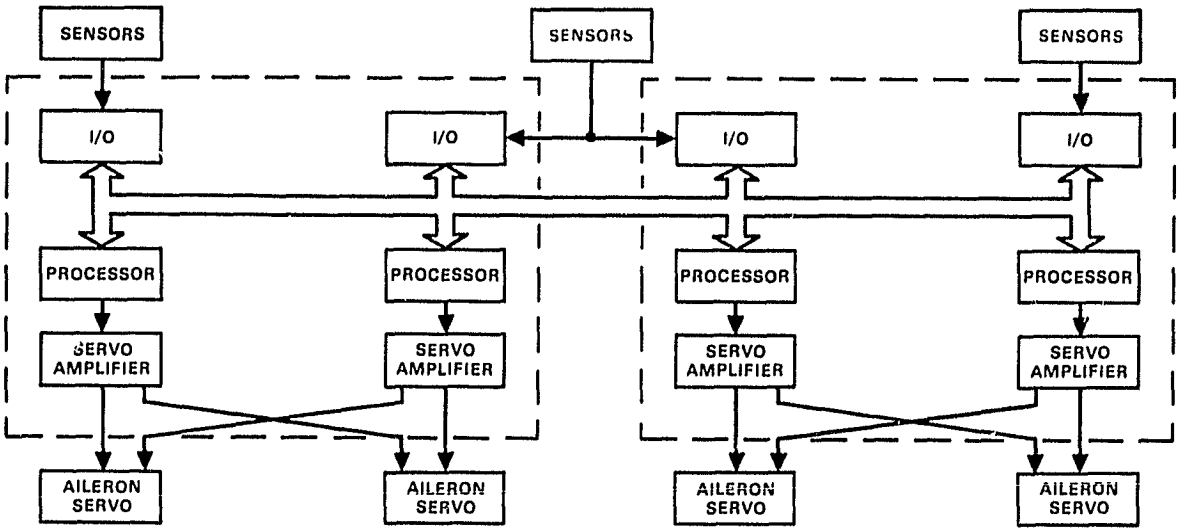

The current configuration of the active control system is to be used as the baseline system for the incorporation of the near term flight control system. The basic configuration of the ACS contains triply redundant sensor elements feeding four channels of signal conditioning and computation followed by dual servo loops feeding each of the two aileron (left and right) series servos. Cross-channel and in-line monitoring is provided within the digital computation loops to provide a basic fail-operational capability after any first failure.

NASA/LOCKHEED AIRCRAFT ENERGY EFFICIENCY

NEAR TERM FCS MODIFICATION

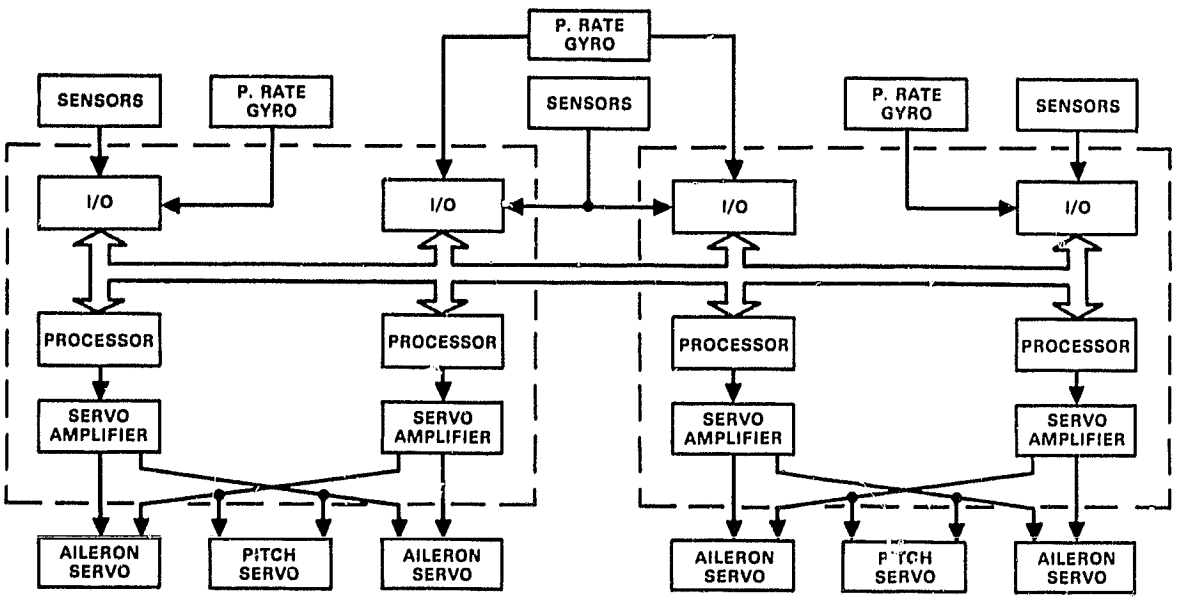

The existing Active Control System (ACS) forms the basis of the near term FCS modification. Modifications include addition of the pitch rate gyros, additional signal conditioning in the computers, modified micro-processor software, addition of servo-amplifiers in the computers, and incorporation of the pitch series servo. The near term FCS function will retain the fail-operational capability of the production ACS.

ORIGINAL PAGE IS
OF POOR QUALITY

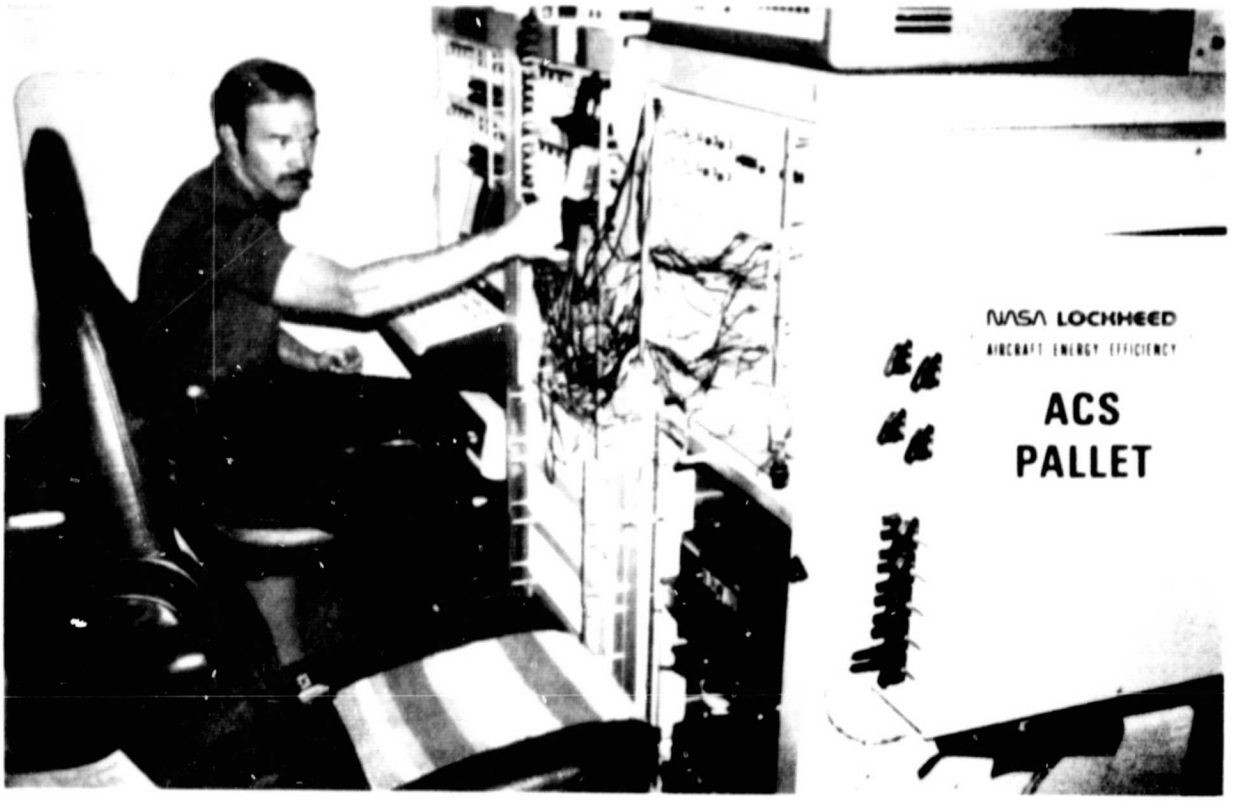

For Laboratory, Vehicle System Simulation, and Flight Test Evaluation of the near term FCS, the modified ACS computers will be installed in a "Pallet" or test installation. This test installation provides for the use of programmable core memories for the ACS computers allowing loading of software changes as necessary during the test program. The pallet also provides the capability of communication with the micro-processor and instrumentation of selected digital computations and input/output signals of the system.

NASA/LOCKHEED
AIRCRAFT ENERGY EFFICIENCY

PITCH SERIES SERVO CONTROL

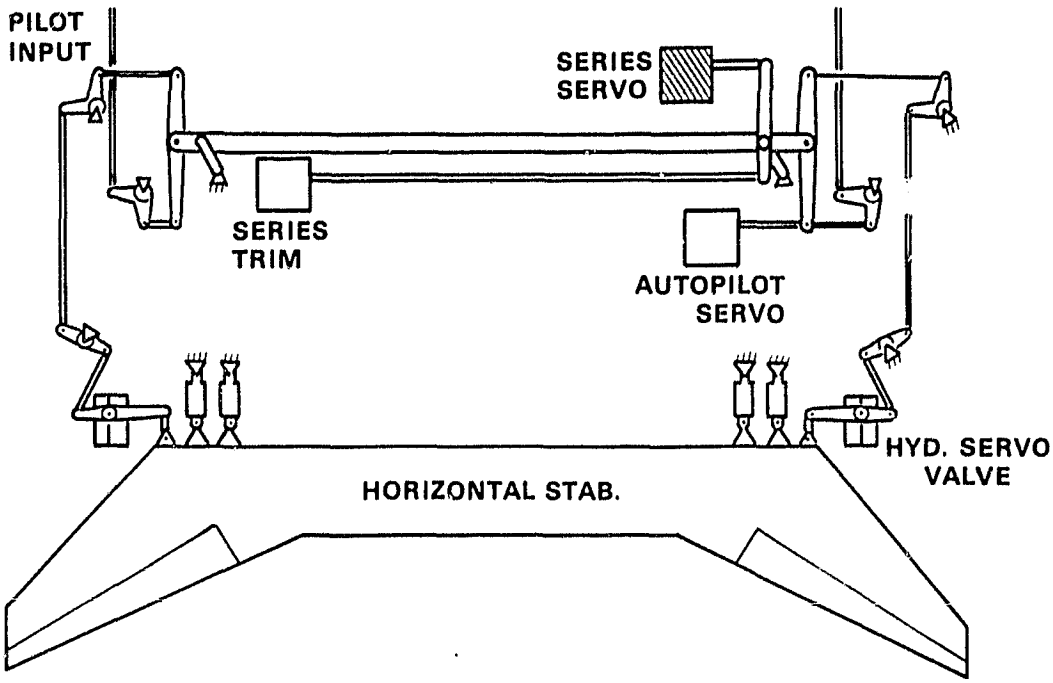

The diagram depicts schematically the mechanization of the stabilizer control and the method of summing of the series servo output into the trim portion of the controls, thereby eliminating any actuator input feedback to the pilot control column.

ORIGINAL PAGE IS
OF POOR QUALITY

NASA LOCKHEED
AIRCRAFT ENERGY EFFICIENCY

SERIES SERVO BENCH TEST

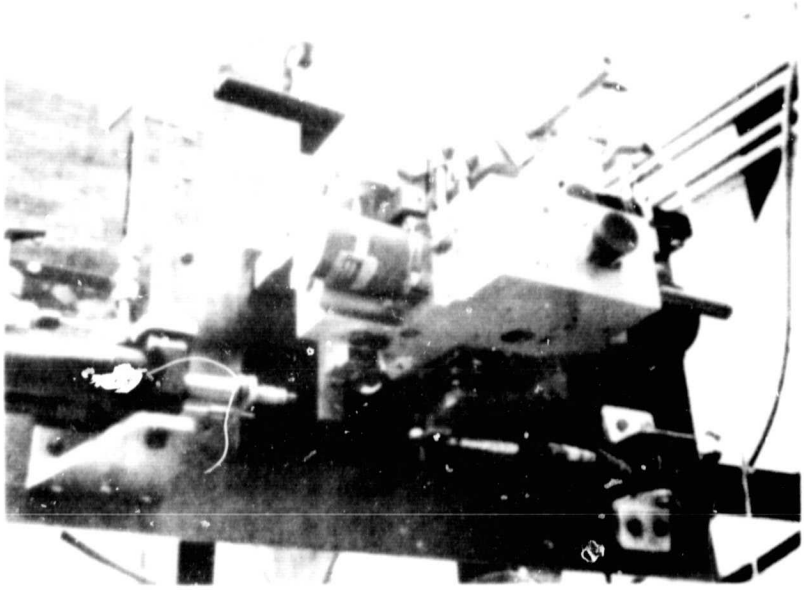

The photo shows the slab series servo installed on a bench test fixture. The unit is not profiled for weight reduction. The aircraft units will be profiled.

NASA/LOCKHEED
AIRCRAFT ENERGY EFFICIENCY

VERIFICATION

FLIGHT SIMULATION

- COMPUTER SIMULATION OF CONTROL SYSTEM AND AIRFRAME

VEHICLE SYSTEM SIMULATION

- CONTROL SYSTEM HARDWARE INCLUDING PRIMARY & SECONDARY CONTROLS
- AERODYNAMIC LOOP CLOSED BY COMPUTER SIMULATION

FLIGHT TEST

- VERIFICATION OF TOTAL DESIGN

Verification of the advanced FCS performance is accomplished by the progression through (1) Flight Simulation using computer simulation of airframe and control hardware, (2) Vehicle System Simulation utilizing actual control system hardware, including primary and secondary controls with aerodynamic loops closed by computer simulation, and (3) flight testing.

NASA/LOCKHEED

AIRCRAFT ENERGY EFFICIENCY

ADVANCED FCS

ORIGINAL PAGE IS
OF POOR QUALITY

NASA LOCKHEED
AIRCRAFT ENERGY EFFICIENCY

AFCS PALLET

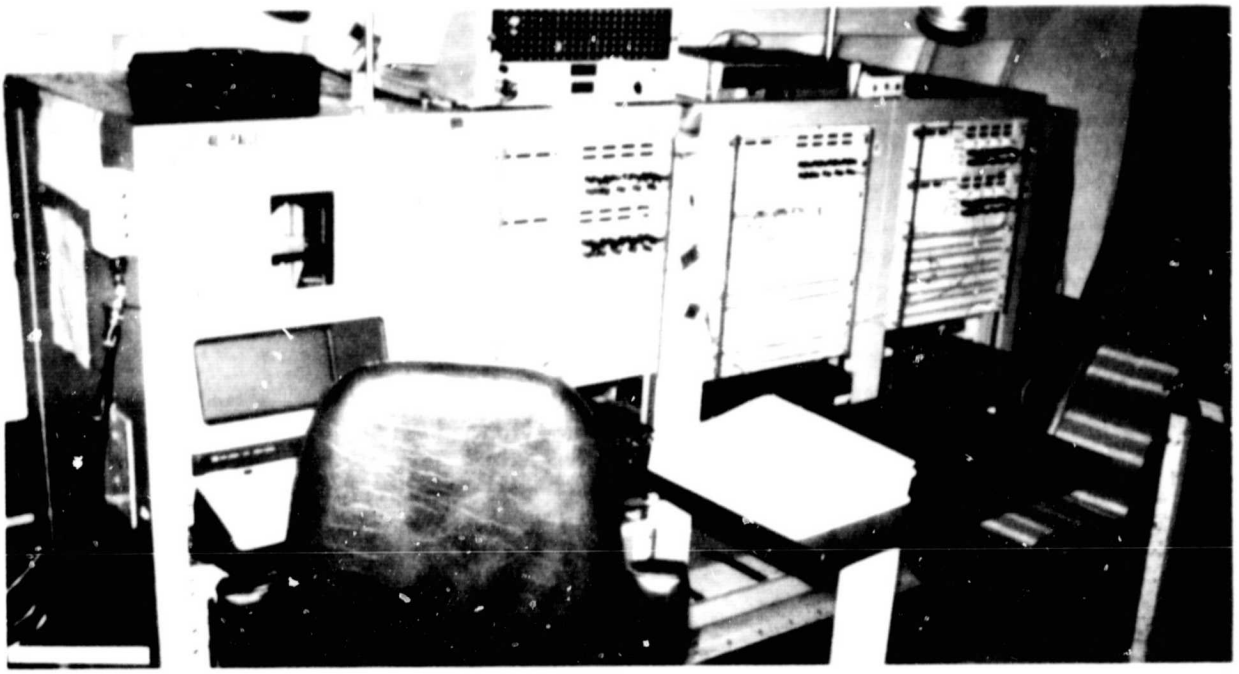

The Advanced Flight Control System pallet is shown as installed in the L-1011 test airplane. Like the ACS installation, program changes can be made conviniently through keyboard entry to the core memory.

KH-106a

NASA/LOCKHEED AIRCRAFT ENERGY EFFICIENCY

EXISTING DIGITAL AFCS USED AS BASELINE

- 4 DIGITAL COMPUTER CHANNELS
- DUAL MONITORED PARALLEL SERVOS
  4 CHANNEL SERVO ELECTRONICS
- SENSORS
  - DUAL MONITORED
  - TRIPLE
  - QUAD

The advanced flight control system to be evaluated will be an adaptation of the existing Digital Automatic Flight Control System. This system provides the capability for a fail-operational capability with a minimum of modification.

NASA/LOCKHEED
AIRCRAFT ENERGY EFFICIENCY

ADVANCED CONTROL SYSTEM FAILURE PROTECTION (FLIGHT TEST CONFIGURATION)

- SYSTEM MONITORING SAME AS AUTOLAND AFCS
- SYSTEM WILL DISPLAY FIRST FAILURE BUT REMAIN OPERATIONAL
- CREW TO ADJUST BALLAST AND REVERT TO NEAR-TERM FCS ON FIRST FAILURE
- USE OF NEAR TERM FCS AS ACTIVE BACKUP OR SWITCHED PASSIVE BACKUP TO BE DETERMINED

The fail-operational capability of the Digital Automatic Flight Control System allows Flight Test evaluation with a minimum of safety hazard. During aft cg tests, where operation without the advanced FCS could be hazardous, the usage of the ballast shifting cg management system will allow reversion to a more stable flight condition in the event of a first failure within the advanced FCS.

NASA/LOCKHEED AIRCRAFT ENERGY EFFICIENCY

ADVANCED FCS DEVELOPMENT

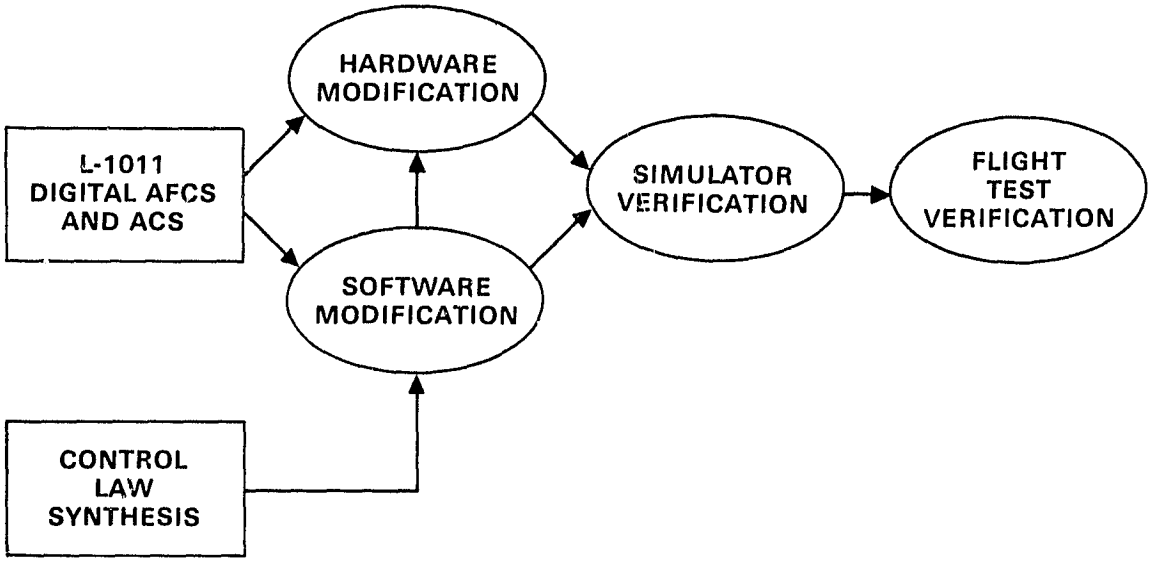

Advanced Control development program is based on the utilization and modification of the digital active control system and automatic flight control system presently utilized in the L-1011. After synthesis of revised control algorithms for the advanced flight control system, the necessary software and hardware modifications will be incorporated into a development electronic system. Operation will be verified through a normal progression of flight simulation, vehicle system simulation and flight test.

NASA/LOCKHEED AIRCRAFT ENERGY EFFICIENCY

CONTROL LAW SYNTHESIS

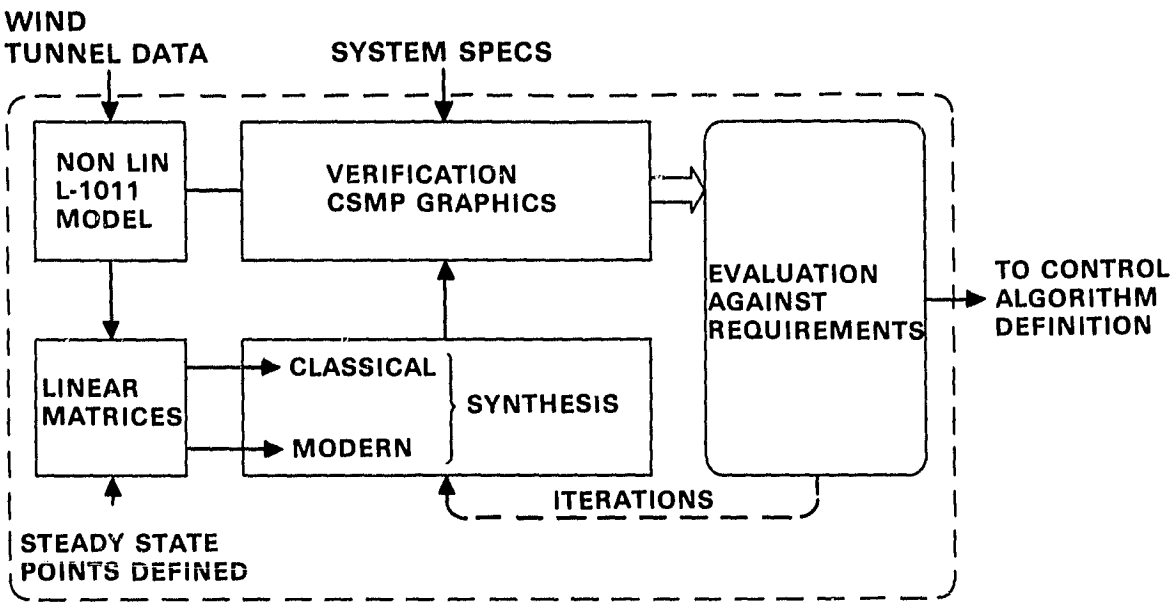

Synthesis of necessary control laws is being accomplished through a combination of classical and modern synthesis techniques with necessary incorporation of non-linearities to determine final predicted performance.

NASA/LOCKHEED
AIRCRAFT ENERGY EFFICIENCY

ADVANCED CONTROL SYSTEM PERFORMANCE CRITERIA OBJECTIVES

- HANDLING QUALITIES AT AFT CG AT LEAST AS GOOD AS THOSE WITHIN THE CURRENT CG RANGE
- PITCH RATE & N_Z TIME HISTORIES
- FREQUENCY RESPONSE CRITERIA
- TIME-TO-DOUBLE AMPLITUDE CRITERIA
- COLUMN FORCE PER KNOT FROM TRIM POINT

Performance criteria for the Advanced Flight Control System is determined such that the performance of the L-1011 at the aft cg conditions with the FCS operational will be equal or better than the present L-1011 within its cg operating range. Various performance parameters as noted are utilized to assess this performance.

NASA/LOCKHEED

AIRCRAFT ENERGY EFFICIENCY

MODERN CONTROL ANALYSIS CONCEPTS

BOB ROONEY

NASA/LOCKHEED AIRCRAFT ENERGY EFFICIENCY

MODERN CONTROL ANALYSIS

- QUADRATIC OPTIMIZATION
- ALGEBRAIC/GEOMETRIC METHODS
- MINIMIZATION TECHNIQUES
- MODAL CONTROL

The particular area of modern control theory that is being applied in this study is that of modal control. There are other methods available for control system design but these were not deemed as suitable.

Quadratic optimization requires specification of desired system performance in terms of a single scalar cost function. This is very difficult and results in a highly iterative technique. There now is a systematic method for defining the weighting matrices comprising the cost function but it is limited to full state feedback.

There are algebraic and geometric formulations but they are quite complex and are limited in their applications.

Lockheed has recently developed a technique for placing poles based on minimization of a metric which is a distance between ordered sets of desired and closed loop pole locations.

The feedback matrices generated to accomplish pole placement are not unique and as such result in arbitrary location of eigenvectors. Much iterative effort is required to find the feedback that achieves the proper distribution of modes as well as the proper modes.

NASA/LOCKHEED AIRCRAFT ENERGY EFFICIENCY

MODAL CONTROL

- EIGENVALUES/EIGENVECTORS
- DIRECT METHOD
- ACCOMMODATES CLASSICAL PERFORMANCE SPECS
- LIMITED STATE FEEDBACK

Lockheed has developed a technique based on the work of Moore, Harvey and Stein, Kimura, and Srinathkumar. This technique simultaneously places the eigenvalues and the eigenvectors of the closed loop system.

It is a direct method, incorporating no iterative procedures, it accommodates classical performance specifications, and comes as close to placing the closed loop eigenvectors as is possible.

NASA/LOCKHEED AIRCRAFT ENERGY EFFICIENCY

ADVANCED CONTROL SYSTEM

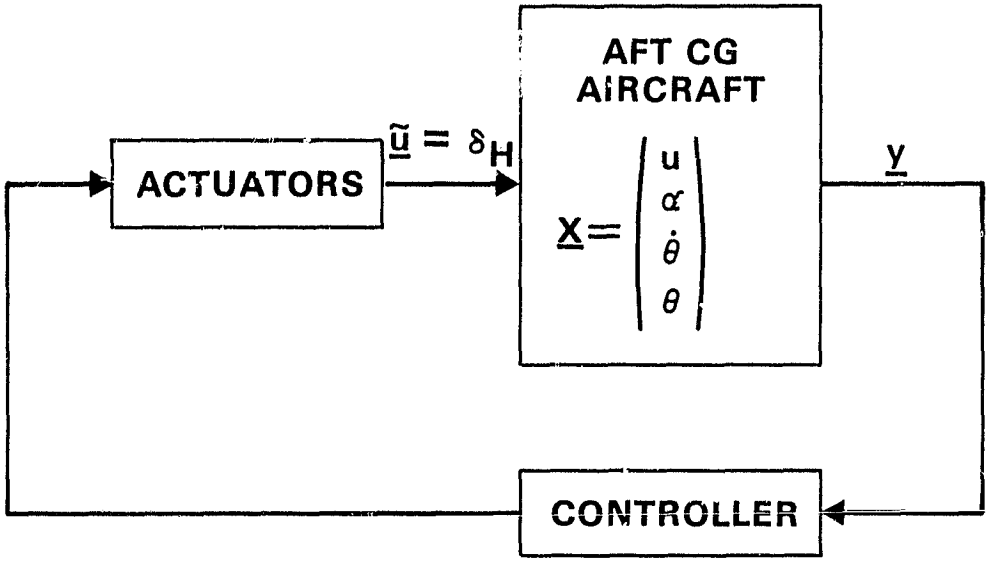

The primary effort is to synthesize a control law for the longitudinal axis of a relaxed static stability aircraft.

NASA/LOCKHEED AIRCRAFT ENERGY EFFICIENCY

SYSTEM REPRESENTATION

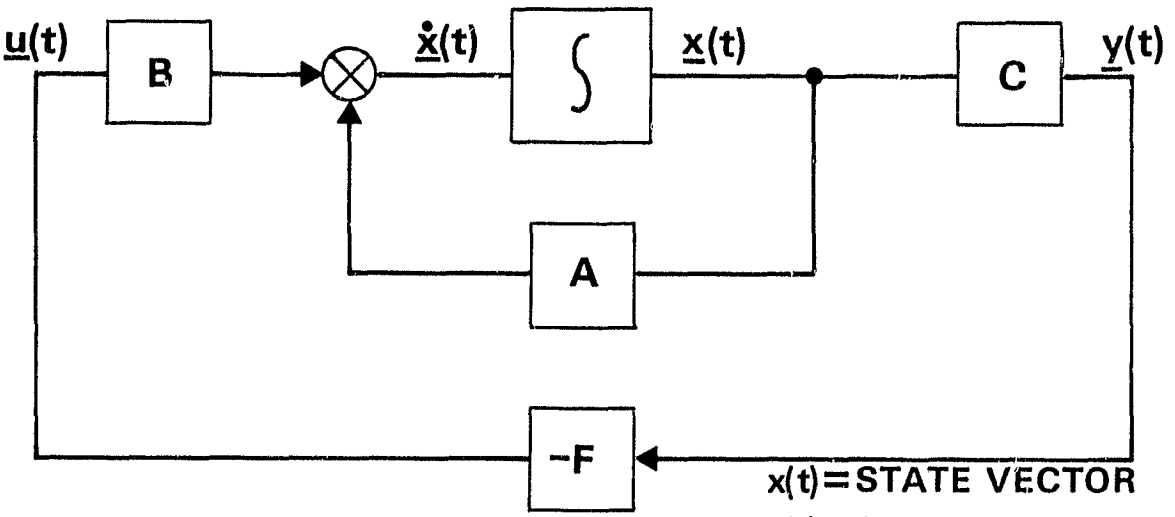

$\dot{\underline{x}}(t) = (A - BFC)\ \underline{x}(t)$

x(t) = STATE VECTOR
y(t) = OUTPUT VECTOR
u(t) = INPUT VECTOR

This block diagram depicts the state space representation of the system we will be working with. The matrices are all real, constant matrices of dimensions compatible with their respective vectors.

NASA/LOCKHEED AIRCRAFT ENERGY EFFICIENCY

SYSTEM STATES

$$X(t) = \begin{pmatrix} \dot{\delta}_H \\ \dot{\delta}_A \\ \delta_H \\ \delta_A \\ \hline u \\ \alpha \\ \dot{\theta} \\ \theta \end{pmatrix} \begin{array}{l} \left.\begin{array}{l} \\ \\ \\ \\ \end{array}\right\} \text{ACTUATOR STATES} \\ \\ \left.\begin{array}{l} \text{- AIRSPEED} \\ \text{- ANGLE OF ATTACK} \\ \text{- PITCH RATE} \\ \text{- PITCH ATTITUDE} \end{array}\right\} \text{AIRCRAFT STATES} \end{array}$$

The system state vector is given by a concatenation of the actuator states and the airframe states.

NASA LOCKHEED AIRCRAFT ENERGY EFFICIENCY

PITCH AXIS

INPUT		OUTPUT	
$u = \begin{pmatrix} \delta_{HC} \\ \delta_{AC} \end{pmatrix}$	HORIZ. STABILIZER COMMAND AILERON COMMAND	$y(t) = \begin{pmatrix} N_Z \\ \dot{\theta} \\ u \\ \theta \end{pmatrix}$	NORMAL ACCELERATION PITCH RATE AIRSPEED PITCH ATTITUDE

The inputs and outputs (measurements) are as shown. Presently, the structure of the input distribution matrix, B, precludes the aileron from participation in the control action. Also, manipulation of the available outputs is done by the output distribution matrix, C.

NASA/LOCKHEED
AIRCRAFT ENERGY EFFICIENCY

MODAL CONTROL CRITERIA

- EQUAL TO OR BETTER THAN L-1011
- C.G. LOCATION AT 25% MAC
- "ORTHOGONAL"

The goal of this part of the study is to develop control laws that make the aft cg location aircraft perform equal to or better than the existing, acceptable L-1011.

This implies two desired, or target models.

1. The L-1011 with a cg location at 25% mean aerodynamic cord (MAC), and

2. An in-house model whereby coupling between aircraft modes is suppressed.

NASA/LOCKHEED AIRCRAFT ENERGY EFFICIENCY

MODERN CONTROL ANALYSIS CRITERIA

- HAVE ACCEPTABLE SYSTEM $\dot{\underline{x}}(t) = A_d\underline{x}(t) + B_d\underline{u}(t)$, $y(t) = C_d x(t)$
- WOULD LIKE AFT C.G. A/C WITH CONTROLLER $[u(t) = Fy(t)]$ TO APPROACH PERFORMANCE OF DESIRED SYSTEM
- GENERATE CONTROL LAW THAT MAKES CLOSED LOOP SYSTEM $\dot{\underline{x}}(t) = (A\text{-}BFC)\underline{x}$ HAVE THE SAME EIGENVALUES AND EIGENVECTORS OF DESIRED SYSTEM SHORT PERIOD AND PHUGOID MODES

The L-1011 with cg position at 25% MAC will be modelled in the state space form, where the subscript d signifies desirable system.

Acceptable performance of the relaxed static stability aircraft with stability augmentation will be judged by how closely the system response time history matches that of the desired system.

In order to make this match, a control law will be synthesized that matches the eigensystems of the test and desired aircraft models for both longitudinal axis modes.

NASA/LOCKHEED
AIRCRAFT ENERGY EFFICIENCY

SAMPLE RESULTS

FLIGHT CONDITION	CRUISE
WEIGHT	408,000 LBS
VELOCITY	254 KEAS
ALTITUDE	37,000 FT
C.G. LOCATION	50% MAC

Some twelve flight cases have been analyzed with satisfactory results obtained. One of the more severe cases, representing the extreme cg position of 50% MAC, is presented here.

NASA/LOCKHEED AIRCRAFT ENERGY EFFICIENCY

OPEN LOOP EIGENVALUES

$$\lambda_1 = .428 \quad \text{(UNSTABLE POLE)}$$

$$\lambda_{2,3} = -.018 \pm j\,.097$$

$$\lambda_4 = -1.64$$

As can be seen, the first eigenvalue of the open loop system represents a fairly severe instability.

NASA/LOCKHEED AIRCRAFT ENERGY EFFICIENCY

SYNTHESIZED CONTROL LAW

$$\delta_{HC} = -0.044N_z + 0.11\dot{\theta} + 0.163u + 0.44\theta$$

The control law generated is for an input to the horizontal stabilizer actuator and is intended to make the aft cg aircraft perform like the mid cg target aircraft.

NASA/LOCKHEED AIRCRAFT ENERGY EFFICIENCY

STABILITY MARGINS

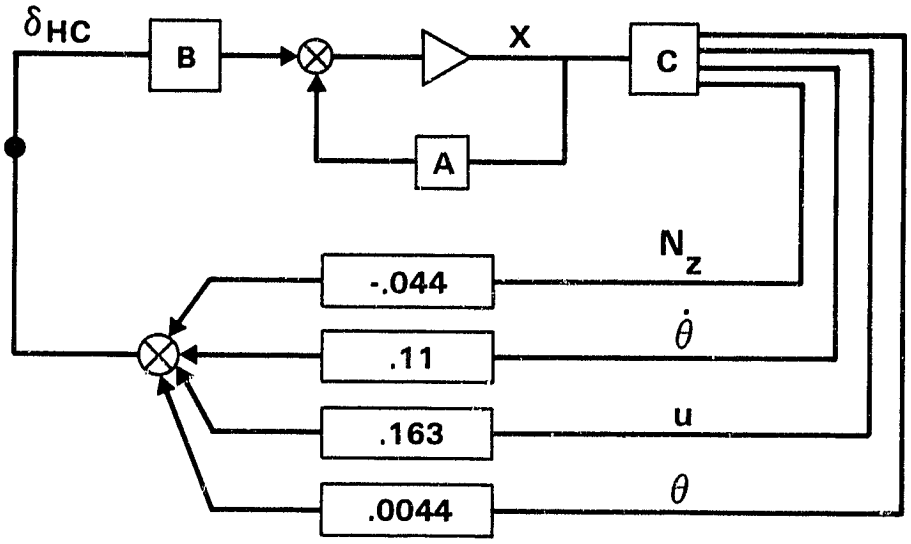

PHASE MARGIN (L-1011 25% MAC) = 37°
("ORTHOGONAL") = 52°

This case has been analyzed using both the mid cg aircraft and the "orthogonal" criteria. Opening the loop around the input reveals that the closed loop system designed using the orthogonal criteria has 40% greater phase margin than the closed loop system designed using the mid cg target. Gain margins for both systems were very high.

In the future we plan on opening the loop on each output and determine corresponding gain and phase margins.

NASA/LOCKHEED AIRCRAFT ENERGY EFFICIENCY

TIME RESPONSE

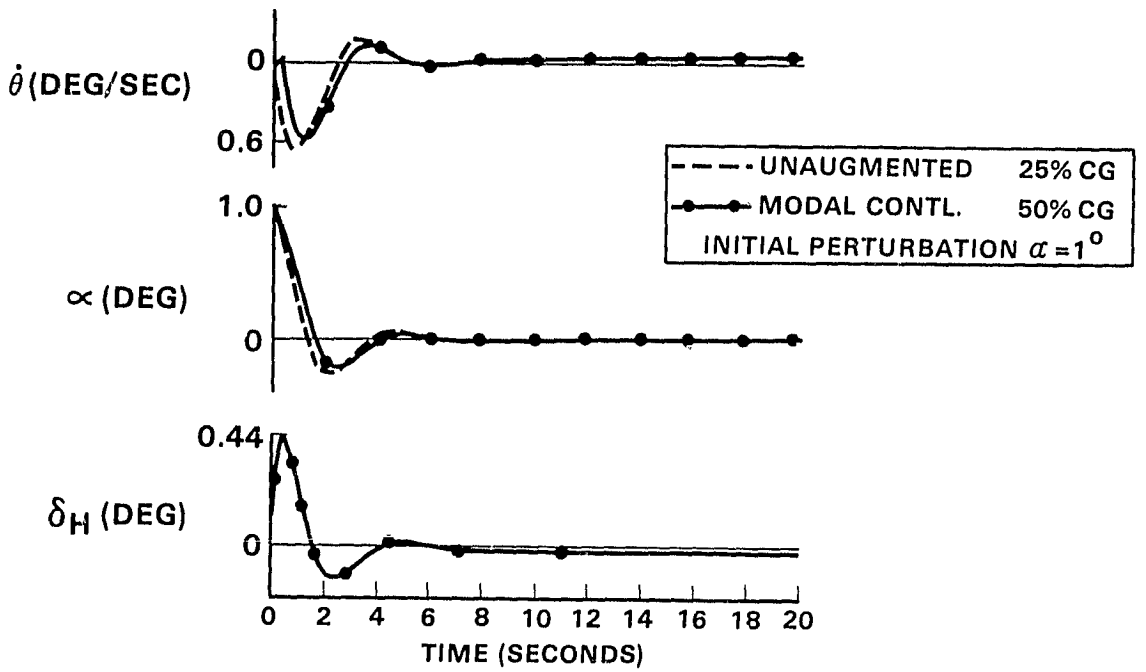

These plots depict the time history of both systems responding to an initial condition on the angle of attack state ($\alpha(O) = 1^o$) of one degree. The target (mid cg) aircraft response is shown as the dashed line and is identified as the unaugmented system. The solid line represents the performance of the aft cg aircraft acting in the presence of the control law previously mentioned. It is readily apparent that there is very good agreement between the two system responses.

Horizontal stabilizer movement, even in this extreme (cg = 50% MAC) case is within acceptable limits.

NASA/LOCKHEED AIRCRAFT ENERGY EFFICIENCY

TIME RESPONSE, (CONT'D)

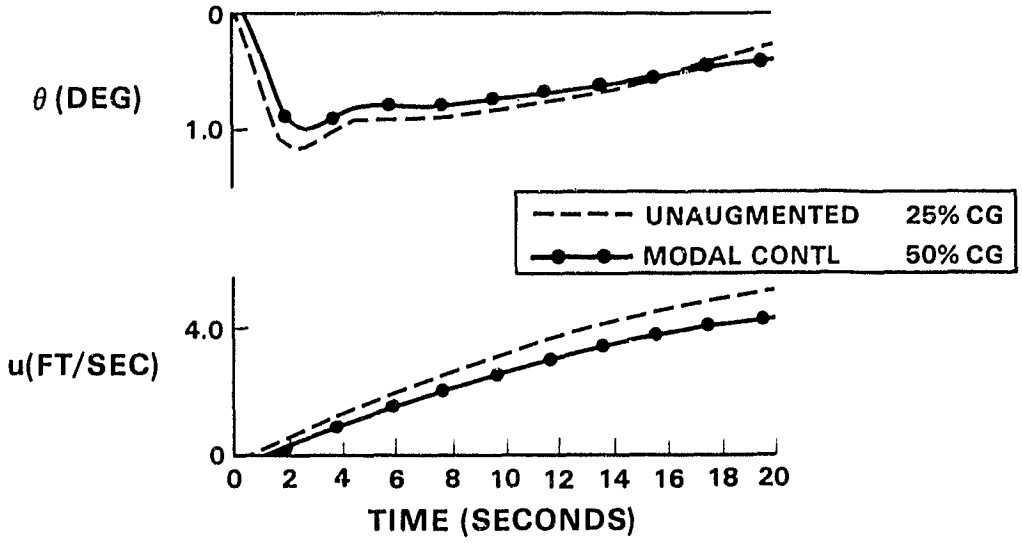

These plots are part of the same simulation and show the same good agreement.

NASA/LOCKHEED AIRCRAFT ENERGY EFFICIENCY

INTEGRATION OF ANALYSIS RESULTS

- SCHEDULING OF CONTROL LAW GAINS
- EVALUATION OF SYSTEM PERFORMANCE IN THE PRESENCE OF GAIN SUPPRESSION.
- EVALUATION WITH SYSTEM NON-LINEARITIES

After all conditions are thoroughly analyzed the control laws will be appropriately scheduled to represent the operational environment, and the operation of the system in the presence of gain scheduling will be evaluated. Also, evaluations will be conducted to determine system sensitivity to feedback gain suppression and to determine the performance of the nonlinear system using the results of the overall study effort.

NASA/LOCKHEED

AIRCRAFT ENERGY EFFICIENCY

PROJECTIONS

WILEY A. GUINN

NASA/LOCKHEED ACEE/EET ACTIVE CONTROLS PROGRAM SCHEDULE

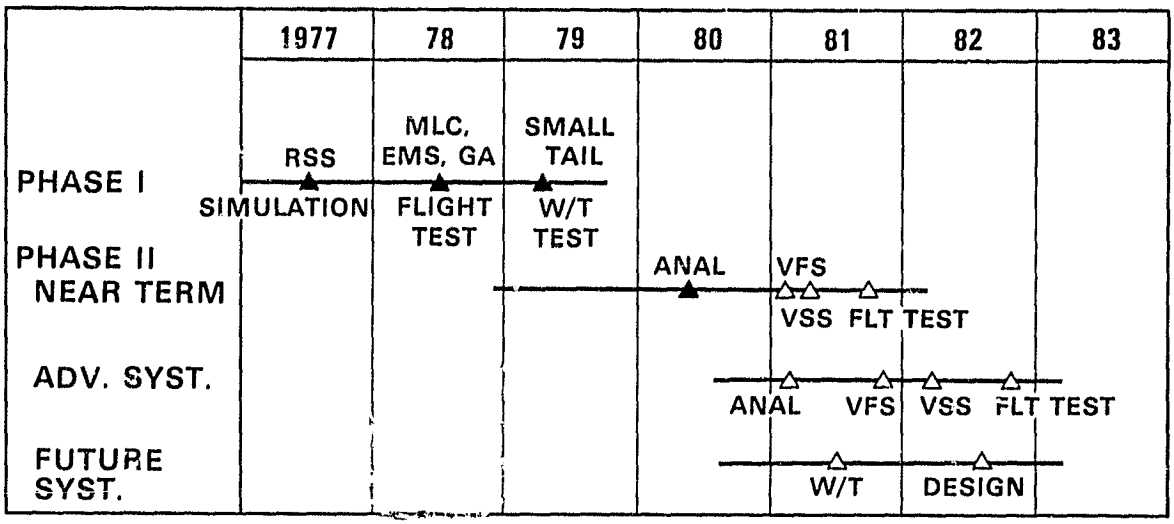

Phase I of the NASA/Lockheed ACEE/EET program was devoted to the flight evaluation of maneuver load control (MLC), elastic mode suppression (EMS), and gust alleviation. Also, relaxed static stability (RSS) and small tail benefits were investigated. The active control load relief technology developed during phase I made possible extended wing span on the L-1011 aircraft with a resulting fuel savings of 3%. Also, the RSS and small tail studies provided the basis for the Phase II program.

The schedule for work on the near term, advanced, and future flight control system provides an indication of when the major development tasks are to be performed. Technology advancements made in developing of the near term and advanced system will be used in the design of the future system.