N84-32423

# NASA Contractor Report 172394

LINEARIZED DYNAMICAL MODEL FOR THE
NASA/IEEE SCOLE CONFIGURATION

A. F. Hotz, E. Collins, and R. E. Skelton

PURDUE UNIVERSITY
West Lafayette, Indiana

Grant NAG1-468
September 1984

National Aeronautics and
Space Administration

**Langley Research Center**
Hampton, Virginia 23665

## Introduction

A Spacecraft Control Laboratory Experiment (SCOLE) has been proposed by Taylor and Balakrishnan† to evaluate control laws for flexible spacecraft. The SCOLE configuration consists of a large antenna attached to the space shuttle orbiter by a flexible beam. Taylor, et. al., discusses the details of the experiment and offers a mathematical model of the system dynamics. The dynamics are described by three distributed parameter beam equations with rigid body attachments at both ends. The boundary conditions at the beam ends contain the forces and moments, both inertial and applied, of the rigid shuttle and reflector bodies. Non-linear kinematics couples the otherwise uncoupled beam equations.

This paper presents the linearized dynamics of the SCOLE configuration. The equations are developed by the method of Lagrange and are assembled into Matrix Second Order Form. When appropriate, the nomenclature, sign conventions and coordinates used by Taylor, et. al., are adopted for convenience.

† Taylor, L. W., Jr. and Balakrishnan, A. V., "A Mathematical Problem and a Spacecraft Control Laboratory Experiment (SCOLE) Used to Evaluate Control Laws for Flexible Spacecraft... NASA/IEEE Design Challenge" (Unpublished).

Page Intentionally Left Blank

# Nomenclature

## Coordinate Systems

$I_1$ - $[\hat{i}, \hat{j}, \hat{k}]^T$ Inertial Frame

$I_2$ - $[\hat{i}_b, \hat{j}_b, \hat{k}_b]^T$ Shuttle body-fixed Frame

$I_3$ - $[\hat{i}_e, \hat{j}_e, \hat{k}_e]^T$ Elastic body (beam) Frame

$I_4$ - $[\hat{i}_r, \hat{j}_r, \hat{k}_r]^T$ Reflector body-fixed Frame

## Transformations

$T_b$ - Inertial to shuttle body, i.e., $I_2 = T_b I_1$ ($T_1^T$ in [1])

$T_{br}$- Reflector to shuttle-body, i.e., $I_4 = T_{br} I_2$ ($T_4^T T_1$ in [1])

## Symbols

$\vec{W}_e$ - total displacement of a point on beam

$\vec{W}_r$ - total displacement of reflector c.g.

$\vec{r}_r$ - vector from shuttle body frame to reflector frame

$\vec{r}_b$ - vector from inertial frame to shuttle body frame

s - distance along beam in $z_e$ direction w.r.t. $I_3$

$\vec{a}_b$ - vector from shuttle body frame to beam frame

$\vec{a}_r$ - vector from reflector body frame to beam attach point

f - proof mass force vector

$F_r$ - force vector at reflector c.g.

$\vec{r}_e$ - vector from beam frame to any point on the beam

$T_s$ - control moment applied to shuttle body

$T_r$ - control moment applied to reflector body

$T_D$ - disturbance torque applied to shuttle body

$J_{s_{xz}}$ - product of inertia of shuttle body (w.r.t. c.g.) in the xz-plane

$J_{s_{x,y,z}}$ - moment of inertia of shuttle body (w.r.t. c.g.) about x,y,z axes resp.

$J_{r_{x,y,z}}$ - moment of inertia of reflector body (w.r.t. c.g.) about x,y,z axes resp.

$M_s$ - shuttle mass

$M_r$ - reflector mass

$m_b$ - beam mass

$\sigma$ - beam mass density • cross-sectional area

$\theta$ - pitch angle, rotation about y axis

$\phi$ - roll angle, rotation about x axis

$\psi$ - yaw angle, rotation about z axis

$u_\phi$ - deflection of beam in y-z plane

$u_\theta$ - deflection of beam in x-z plane

$u_\psi$ - angular deflection of beam about z-axis

} w.r.t. $I_3$

L - length of reflector mast, beam

$EI_\phi$ - bending rigidity of beam in y-z plane

$EI_\theta$ - bending rigidity of beam in x-z plane

GJ - torsional rigidity of beam about z-axis

M - Mass Matrix

K - Stiffness Matrix

D - Disturbance Input Matrix

B - Control Input Matrix

$V_{a,A,\omega}$ - acceleration, attitude and angular velocity sensor noise respectively.

w - plant noise

$q_i$ - $i^{th}$ generalized coordinate

z - measurement vector

$\kappa$ - beam mass density · beam polar moment of inertia

$J_{b_z}$ - beam polar moment of inertia · beam cross-sectional area

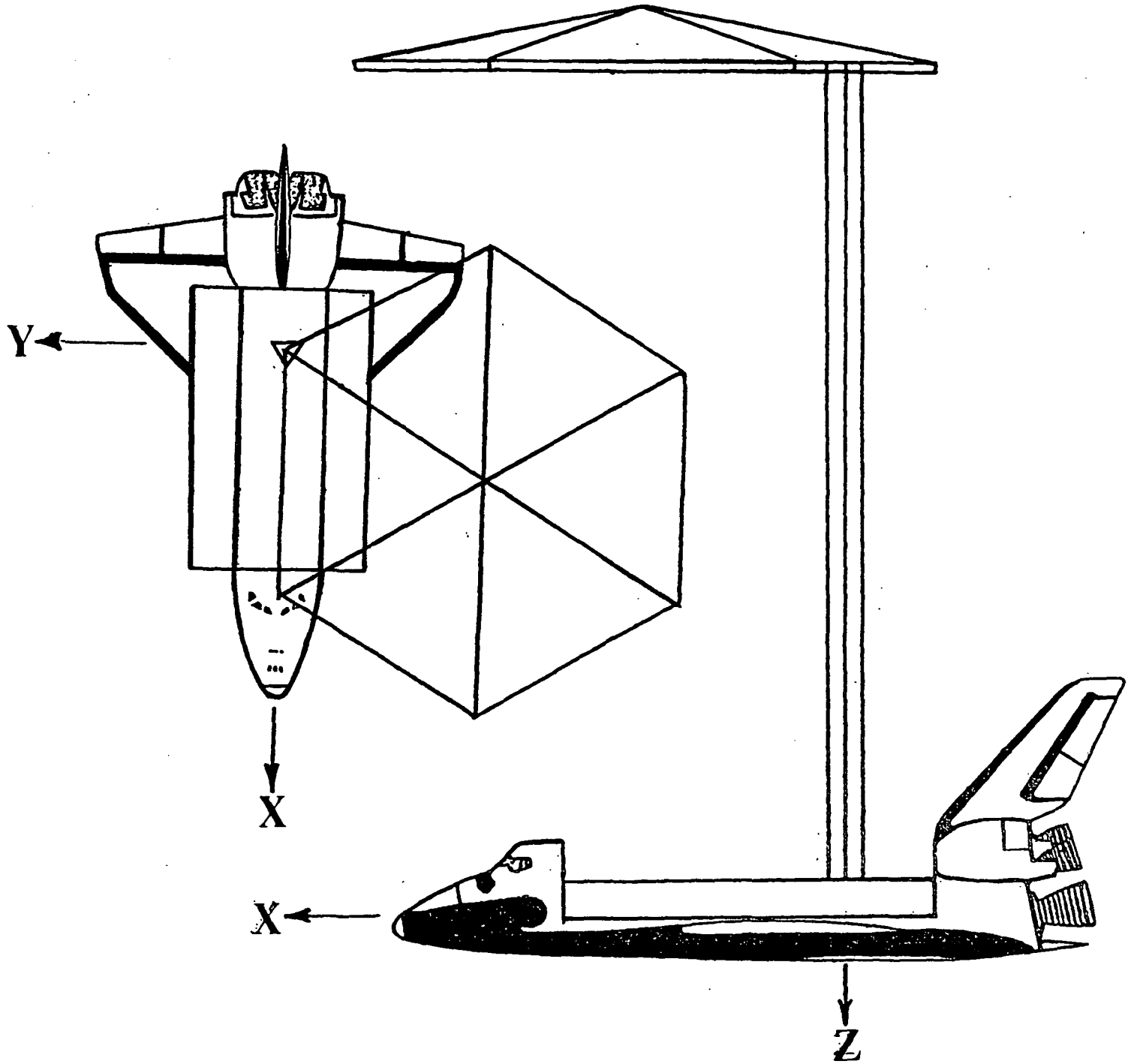


Figure 1 - SCOLE Configuration

## Kinematics*

The total displacement of the shuttle body at the c.g. is defined by,

(1a) $$\vec{r}_b = I_1^T \underline{r_b}$$

and the total displacement for an arbitrary point on the beam and at the reflector c.g. are defined respectively by

(1b) $$\vec{W}_e(s, t) = \vec{r}_b + \vec{r}_e = I_1^T \underline{r_b} + I_2^T \underline{a_b} + I_3^T \underline{u}(s, t)$$

$$= I_1^T[\underline{r_b} + T_b^T(\underline{a_b} + \underline{u}(s, t))]^{**}$$

where $\underline{u}(s, t)^T = [-u_\theta(s, t), u_\phi(s, t), -s]^{***}$

(1c) $$\vec{W}_r = \vec{r}_b + \vec{r}_r = I_1^T \underline{r_b} + I_2^T \underline{a_b} + I_3^T \underline{u}(L, t) - I_4^T \underline{a_r}$$

$$= I_1^T[\underline{r_b} + T_b^T(\underline{a_b} + \underline{u}(L, t) - T_{br}^T \underline{a_r})]^{**}$$

For small angles $\phi$, $\theta$ and $\psi$ the transformation matrix $T_b^T$ is defined by,

$$T_b^T = \begin{bmatrix} 1 & -\psi & \theta \\ \psi & 1 & -\phi \\ -\theta & \phi & 1 \end{bmatrix}$$

and the transformation matrix $T_{br}^T$ by,

*see figure 2.

**$I_2$ and $I_3$ are coincident

***The mast is treated as an Euler-Bernoulli rod and $u_\phi$, $u_\theta$ and $u_\psi$ are assumed small.

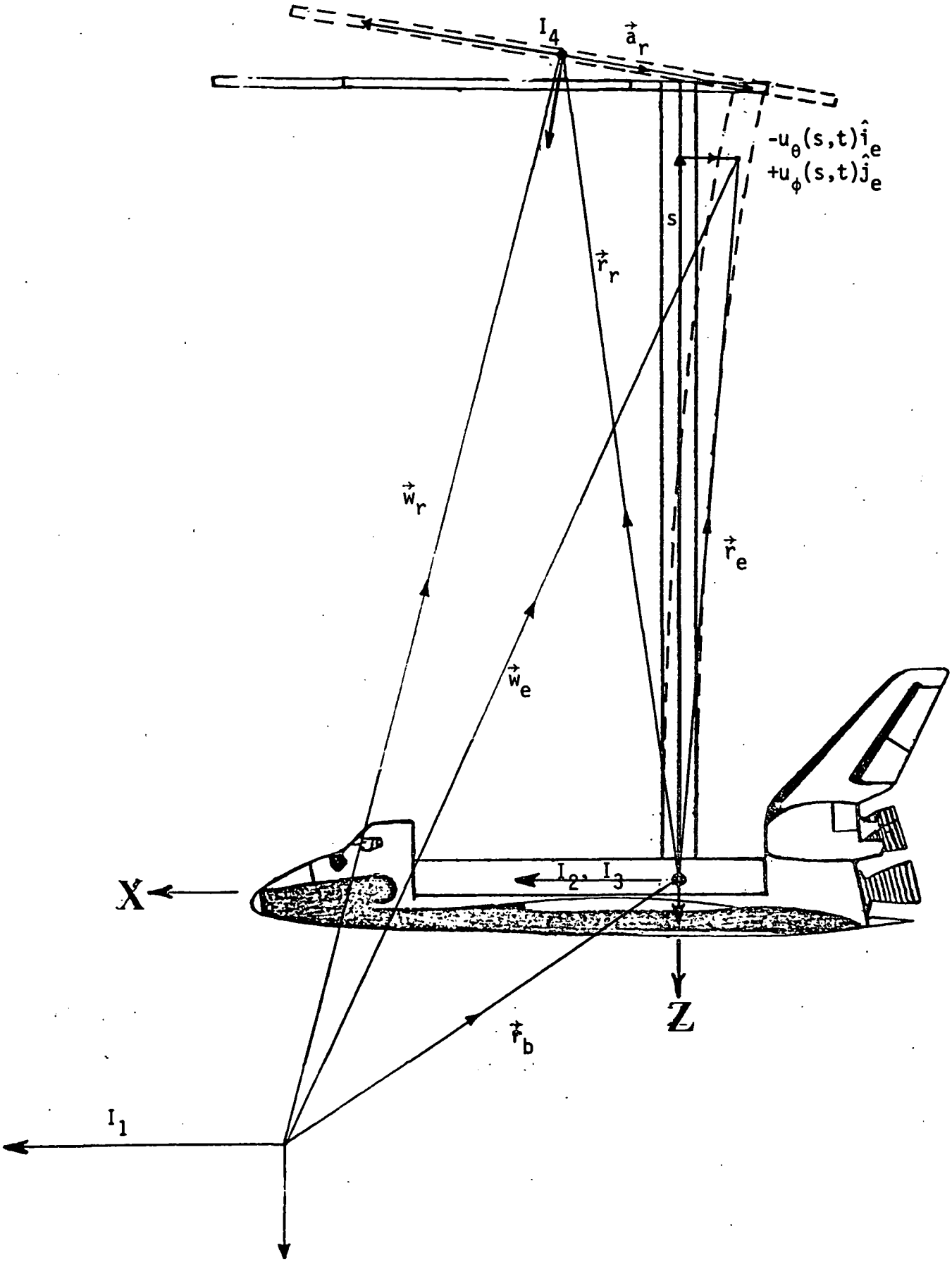


Figure 2 - SCOLE Kinematics

$$T_{br}^{T} = \begin{bmatrix} 1 & -u_{\psi}(L, t) & u_{\theta}'(L, t) \\ u_{\psi}(L, t) & 1 & -u_{\phi}'(L, t) \\ -u_{\theta}'(L, t) & u_{\phi}'(L, t) & 1 \end{bmatrix}$$

where $u_{(\cdot)}'(L, t) = \dfrac{\partial u_{(\cdot)}(L, t)}{\partial s}$ .

For both $T_b$ and $T_{br}$, the NASA-Standard Euler Angles for rigid body rotation are assumed.

The velocity equations follow directly from equations 1a, 1b and 1c,

(2a) $$\dot{\vec{r}}_b = I_1^T \dot{\underline{r}}_b$$

(2b) $$\dot{\vec{W}}_e(s, t) = I_1^T[\dot{\underline{r}}_b + \dot{T}_b^T \underline{a}_b + \dot{T}_b^T \underline{u}(s, t) + T_b^T \dot{\underline{u}}(s, t)]$$

(2c) $$\dot{\vec{W}}_r = I_1^T[\dot{\underline{r}}_b + \dot{T}_b^T(\underline{a}_b + \underline{u}(L, t) - T_{br}^T \underline{a}_r) + T_b^T(\dot{\underline{u}}(L, t) - \dot{T}_{br}^T \underline{a}_r)]$$

Making the proper substitution equations 2a, 2b and 2c become,

(3a) $$\dot{\vec{r}}_b = I_1^T \begin{bmatrix} \dot{x} \\ \dot{y} \\ \dot{z} \end{bmatrix}$$

(3b) $$\dot{\vec{W}}_e(s, t) = I_1^T \begin{bmatrix} \dot{x} - \dot{\psi} u_{\phi} - s\dot{\theta} - \dot{u}_{\theta} - \psi \dot{u}_{\phi} \\ \dot{y} - \dot{\psi} u_{\theta} + s\dot{\phi} - \psi \dot{u}_{\theta} + \dot{u}_{\phi} \\ \dot{z} + \dot{\theta} u_{\theta} + \dot{\phi} u_{\phi} + \theta \dot{u}_{\theta} + \phi \dot{u}_{\phi} \end{bmatrix} \qquad \text{where } u_{(\cdot)} \triangleq u_{(\cdot)}(s, t)$$

$$(3c)\quad \dot{\vec{W}}_r = W_e(L,\ t) + I_1^T \begin{bmatrix} (\dot{\psi}u_\psi + \dot{\theta}u'_\theta + \psi\dot{u}_\psi + \theta\dot{u}'_\theta)a_{r_x} + (\dot{u}_\psi - \dot{\theta}u'_\phi + \dot{\psi} - \theta\dot{u}'_\phi)a_{r_y} \\ -(\dot{\psi} + \dot{\phi}u'_\theta + \dot{u}_\psi + \phi\dot{u}'_\theta)a_{r_x} + (\dot{\psi}u_\psi + \dot{\phi}u'_\phi + \psi\dot{u}_\psi + \phi\dot{u}'_\phi)a_{r_y} \\ (\dot{\theta} - \dot{\phi}u_\psi + \dot{u}'_\theta - \phi\dot{u}_\psi)a_{r_x} - (\dot{\theta}u_\psi + \dot{\phi} + \theta\dot{u}_\psi + \dot{u}'_\phi)a_{r_y} \end{bmatrix}$$

where $u_{(\cdot)} \triangleq u_{(\cdot)}(L,\ t)$.

By assuming that products of small terms are neglible, equations 3a, 3b and 3c simplify to,

$$(4a)\qquad \dot{\vec{r}}_b = I_1^T \begin{bmatrix} \dot{x} \\ \dot{y} \\ \dot{z} \end{bmatrix}$$

$$(4b)\qquad \dot{\vec{W}}_e(s,\ t) = I_1^T \begin{bmatrix} \dot{x} - s\dot{\theta} - \dot{u}_\theta \\ \dot{y} + s\dot{\phi} + \dot{u}_\phi \\ \dot{z} \end{bmatrix}$$

$$(4c)\qquad \dot{\vec{W}}_r = I_1^T \begin{bmatrix} \dot{x} - L\dot{\theta} - \dot{u}_\theta + (\dot{u}_\psi + \dot{\psi})a_{r_y} \\ \dot{y} + L\dot{\phi} + \dot{u}_\phi - (\dot{\psi} + \dot{u}_\psi)a_{r_x} \\ \dot{z} + (\dot{\theta} + \dot{u}'_\theta)a_{r_x} - (\dot{\phi} + \dot{u}'_\phi)a_{r_y} \end{bmatrix}, \quad u_{(\cdot)} = u_{(\cdot)}(L,\ t)$$

## Kinetic Energy, Potential Energy and Generalized Forces

In the method of Lagrange, the equations of motion are formulated from the scalar quantities of kinetic energy, potential energy and work. Using the kinematics of the previous section these three quantities are easily written;

## Kinetic Energy

$$T = 1/2\{M_s(\dot{x}^2+\dot{y}^2+\dot{z}^2)+J_{s_x}\dot{\phi}^2+J_{s_y}\dot{\theta}^2+J_{s_z}\dot{\psi}^2+2J_{s_{xz}}\dot{\phi}\dot{\psi}$$

(5a) $$+M_r(\dot{W}_{r_x}^2+\dot{W}_{r_y}^2+\dot{W}_{r_z}^2)+J_{r_x}(\dot{\phi}+\dot{u}_\phi'(L,\ t))^2$$

$$+J_{r_y}(\dot{\theta}+\dot{u}_\theta'(L,\ t))^2+J_{r_z}(\dot{\psi}+\dot{u}_\psi(L,\ t))^2$$

$$+\int_0^L \sigma(s)(\dot{W}_{e_x}^2+\dot{W}_{e_y}^2+\dot{W}_{e_z}^2)ds + \int_0^L \kappa(s)(\dot{\psi}+\dot{u}_\psi(s,t))^2 ds\}$$

## Potential Energy

(5b) $$U = 1/2 \int_0^L \{EI_\theta u_\theta''^2(s,\ t)+EI_\phi u_\phi''^2(s,\ t)+GJu_\psi'^2(s,\ t)\}ds$$

## Work

(5c) $$\delta W = \sum_i Q_i \delta q_i = (F_{r_x}+f_{1_x}+f_{2_x})\delta_x+(F_{r_y}+f_{1_y}+f_{2_y})\delta y$$

$$+(0)\delta_z+(T_{s_\theta}+T_{r_\theta}+T_{D_\theta}-f_{1_x}s_1-f_{2_x}s_2-F_{r_x}L)\delta\theta$$

$$+(T_{s_\phi}+T_{r_\phi}+T_{D_\phi}+F_{r_y}L+f_{1_y}s_1+f_{2_y}s_2)\delta\phi$$

$$+(T_{s_\psi}+T_{r_\psi}+T_{D_\psi}-F_{r_x}a_{r_y}+F_{r_y}a_{r_x})\delta\psi$$

$$+T_{r_\theta}\delta u_\theta'(L,t)-f_{1_x}\delta u_\theta(s_1,t)-f_{2_x}\delta u_\theta(s_2,t)-F_{r_x}\delta u_\theta(L,t)$$

$$+T_{r_\phi}\delta u_\phi'(L,t)+f_{1_y}\delta u_\phi(s_1,t)+f_{2_y}\delta u_\phi(s_2,t)+F_{r_y}\delta u_\phi(L,t)$$

$$+T_{r_\psi}\delta u_\psi(L,t)-F_{r_x}a_{r_y}\delta u_\psi(L,t)+F_{r_y}a_{r_x}\delta u_\psi(L,t)$$

Defining the following Ritz approximations for $u_\phi$, $u_\theta$ and $u_\psi$,

$$u_\theta(s,\ t) = \sum_1^{n_\theta} \nu_{i_\theta}(s)\eta_{i_\theta}(t)$$

$$u_\phi(s,\ t) = \sum_1^{n_\phi} \nu_{i_\phi}(s)\eta_{i_\phi}(t)$$

$$u_\psi(s,\ t) = \sum_1^{n_\psi} \nu_{i_\psi}(s)\eta_{i_\psi}(t)$$

and making the appropriate substitutions the expressions for the kinetic and potential energy and work can be written,

$$\begin{aligned}
T = {} & 1/2M_s(\dot{x}^2+\dot{y}^2+\dot{z}^2)+1/2(J_{s_y}\dot{\theta}^2+J_{s_x}\dot{\phi}^2+J_{s_z}\dot{\psi}^2)+J_{s_{xz}}\dot{\phi}\dot{\psi} \\
& +1/2M_r(\dot{x}-L\dot{\theta}-\sum_i \nu_{i_\theta}(L)\dot{\eta}_{i_\theta}(t)+\dot{\psi}a_{r_y}+\sum_i \nu_{i_\psi}(L)\dot{\eta}_{i_\psi}(t)a_{r_y})^2 \\
& +1/2M_r(\dot{y}+L\dot{\phi}+\sum_i \nu_{i_\phi}(L)\dot{\eta}_{i_\phi}(t)-\dot{\psi}a_{r_x}-\sum_i \nu_{i_\psi}(L)\dot{\eta}_{i_\psi}(t)a_{r_x})^2 \\
& +1/2M_r(\dot{z}+\dot{\theta}a_{r_x}-\dot{\phi}a_{r_y}+\sum_i \nu'_{i_\theta}(L)\dot{\eta}_{i_\theta}(t)a_{r_x}-\sum_i \nu'_{i_\phi}(L)\dot{\eta}_{i_\phi}(t)a_{r_y})^2 \\
& +1/2J_{r_y}(\dot{\theta}+\sum_i \nu'_{i_\theta}(L)\dot{\eta}_{i_\theta}(t))^2+1/2J_{r_z}(\dot{\psi}+\sum_i \nu_{i_\psi}(L)\dot{\eta}_{i_\psi}(t))^2 \\
& +1/2J_{r_x}(\dot{\phi}+\sum_i \nu'_{i_\phi}(L)\dot{\eta}_{i_\phi}(t))^2+1/2\int_0^L \sigma(s)\dot{z}^2ds \\
& +1/2\int_0^L \sigma(s)(\dot{x}-s\dot{\theta}-\sum_i \nu_{i_\theta}(s)\dot{\eta}_{i_\theta}(t))^2ds \\
& +1/2\int_0^L \sigma(s)(\dot{y}+s\dot{\phi}+\sum_i \nu_{i_\phi}(s)\dot{\eta}_{i_\phi}(t))^2ds+\frac{1}{2}\int_0^L \kappa(s)(\dot{\psi}+\sum_i \nu_{i_\psi}(s)\dot{\eta}_{i_\psi}(t))^2ds
\end{aligned} \tag{6a}$$

$$\begin{aligned}
U = {} & 1/2\int_0^L \{EI_\theta(\sum_i \nu''_{i_\theta}(s)\eta_{i_\theta}(t))^2+EI_\phi(\sum_i \nu''_{i_\phi}(s)\eta_{i_\phi}(t))^2 \\
& +GJ(\sum_i \nu'_{i_\psi}(s)\eta_{i_\psi}(t))^2\}ds
\end{aligned} \tag{6b}$$

$$
\begin{aligned}
(6c)\qquad \delta W = \sum_i Q_i \delta q_i = {} & (F_{r_x}+f_{1_x}+f_{2_x})\delta x+(F_{r_y}+f_{1_y}+f_{2_y})\delta y \\
& +(0)\delta z+(T_{s_\theta}+T_{r_\theta}+T_{D_\theta}-f_{1_x}s_1-f_{2_x}s_2-F_{r_x}L)\delta\theta \\
& +(T_{s_\phi}+T_{r_\phi}+T_{D_\phi}+F_{r_y}L+f_{1_y}s_1+f_{2_y}s_2)\delta\phi \\
& +(T_{s_\psi}+T_{r_\psi}+T_{D_\psi}-F_{r_x}a_{r_y}+F_{r_y}a_{r_x})\delta\psi \\
& +\sum_i(T_{r_\theta}\nu'_{i_\theta}(L)-f_{1_x}\nu_{i_\theta}(s_1)-f_{2_x}\nu_{i_\theta}(L)-F_{r_x}\nu_{i_\theta}(L))\delta\eta_{i_\theta}(t) \\
& +\sum_i(T_{R_\phi}\nu'_{i_\phi}(L)+f_{1_y}\nu_{i_\phi}(s_1)+f_{2_y}\nu_{i_\phi}(s_2)+F_{r_y}\nu_{i_\phi}(L))\delta\eta_{i_\phi}(t) \\
& +\sum_i(T_{r_\psi}\nu_{i_\psi}(L)-F_{r_x}a_{r_y}\nu_{i_\psi}(L)+F_{r_y}a_{r_x}\nu_{i_\psi}(L))\delta\eta_{i_\psi}(t)
\end{aligned}
$$

## Lagrange's Equation

Lagrange's Equation is given by,

$$\frac{d}{dt}\left(\frac{\partial T}{\partial \dot{q}_i}\right) - \frac{\partial T}{\partial q_i} + \frac{\partial U}{\partial q_i} = Q_i .$$

where $q_i$ are generalized coordinates.

Defining the generalized coordinates as,

$$[q_i,\ i=1 \rightarrow p]^T = [x, y, z, \phi, \theta, \psi, \eta_{i_\phi}\ (i=1 \rightarrow n_\phi),\ \eta_{i_\theta}\ (i=1 \rightarrow n_\theta),\ \eta_{i_\psi}\ (i=1 \rightarrow n_\psi)]$$

where $p = 6 + n_\phi + n_\theta + n_\psi$

and performing the required operations on equations 6a and 6b and using 5c results in the equations of motion shown in Appendix I. Assembled in Matrix Second-Order Form, the equations can be written,

$$M\ddot{q} + Kq = Bu + Dw^*$$

where $M = \begin{bmatrix} M_{RR} & M_{RE} \\ M_{RE}^T & M_{EE} \end{bmatrix}$, $K = \begin{bmatrix} 0 & 0 \\ 0 & K_{EE} \end{bmatrix}$ $D = \begin{bmatrix} D_R \\ 0 \end{bmatrix}$

$$u^T = [F_{r_x}, F_{r_y}, f_{1_x}, f_{2_x}, f_{1_y}, f_{2_y}, T_{r_\phi}, T_{r_\theta}, T_{r_\psi}, T_{s_\phi}, T_{s_\theta}, T_{s_\psi}]$$

$$w^T = [T_{D_\phi}, T_{D_\theta}, T_{D_\psi}]$$

*A numerical example is presented in Appendix 3.

$$M_{RR} = \begin{bmatrix} M_s+M_r+m_b & 0 & 0 & 0 & -M_rL-\frac{m_bL}{2} & M_ra_{r_y} \\ 0 & M_s+M_r+m_b & 0 & M_rL+\frac{m_bL}{2} & 0 & -M_ra_{r_x} \\ 0 & 0 & M_s+M_r+m_b & -M_ra_{r_y} & M_ra_{r_x} & 0 \\ 0 & \frac{m_bL}{2}+M_rL & -M_ra_{r_y} & J_1 & -M_ra_{r_x}a_{r_y} & J_{s_{xz}}-M_rLa_{r_x} \\ -M_rL-\frac{m_bL}{2} & 0 & M_ra_{r_x} & -M_ra_{r_x}a_{r_y} & J_2 & -M_rLa_{r_y} \\ M_ra_{r_y} & -M_ra_{r_x} & 0 & J_{s_{xz}}-M_rLa_{r_x} & -M_rLa_{r_y} & J_3 \end{bmatrix}$$

$$J_1 = J_{s_x}+J_{r_x}+M_rL^2+M_ra_{r_y}^2+m_bL^2/3$$

$$J_2 = J_{s_y}+J_{r_y}+M_rL^2+M_ra_{r_x}^2+m_bL^2/3$$

$$J_3 = J_{s_z}+J_{r_z}+M_r(a_{r_y}^2+a_{r_x}^2)+J_{b_z}$$

$$
M_{RE}^{T} = \begin{bmatrix}
0 & \gamma_{1_\phi} & -\chi'_{1_{\phi,y}} & \zeta_{1_{\phi,y}} & -\chi'_{1_{\phi,y}} a_{r_x} & -\chi_{1_{\phi,x}} \\
0 & \gamma_{2_\phi} & -\chi'_{2_{\phi,y}} & \zeta_{2_{\phi,y}} & -\chi'_{2_{\phi,y}} a_{r_x} & -\chi_{2_{\phi,x}} \\
\vdots & \vdots & \vdots & \vdots & \vdots & \vdots \\
-\gamma_{1_\theta} & 0 & \chi'_{1_{\theta,x}} & -\chi'_{1_{\theta,y}} a_{r_x} & \zeta_{1_{\theta,x}} & -\chi_{1_{\theta,y}} \\
-\gamma_{2_\theta} & 0 & \chi'_{2_{\theta,x}} & -\chi'_{2_{\theta,y}} a_{r_x} & \zeta_{2_{\theta,x}} & -\chi_{2_{\theta,y}} \\
\vdots & \vdots & \vdots & \vdots & \vdots & \vdots \\
\chi_{1_{\psi,y}} & -\chi_{1_{\psi,x}} & 0 & -\omega_{1_{\psi,x}} & -\omega_{1_{\psi,y}} & \alpha_{1_\psi} \\
\chi_{2_{\psi,y}} & -\chi_{2_{\psi,x}} & 0 & -\omega_{2_{\psi,x}} & -\omega_{2_{\psi,y}} & \alpha_{2_\psi} \\
\vdots & \vdots & \vdots & \vdots & \vdots & \vdots
\end{bmatrix}
$$

$$
M_{EE} = \begin{bmatrix}
\tau_{11_{\phi,y}} + \rho_{11_\phi} & \tau_{12_{\phi,y}} + \rho_{12_\phi} & \cdots & -\beta_{11_{\phi,\theta}} & -\beta_{12_{\phi,\theta}} & \cdots & -\delta_{11_{\phi,\psi}} & -\delta_{12_{\phi,\psi}} & \cdots \\
\tau_{21_{\phi,y}} + \rho_{21_\phi} & \tau_{22_{\phi,y}} + \rho_{22_\phi} & \cdots & -\beta_{21_{\phi,\theta}} & -\beta_{22_{\phi,\theta}} & \cdots & -\delta_{21_{\phi,\psi}} & -\delta_{22_{\phi,\psi}} & \cdots \\
\vdots & \vdots & \vdots & \vdots & \vdots & \vdots & & & \\
-\beta_{11_{\theta,\phi}} & -\beta_{12_{\theta,\phi}} & \cdots & \tau_{11_{\theta,x}} + \rho_{11_\theta} & \tau_{12_{\theta,x}} + \rho_{12_\theta} & \cdots & -\chi_{1_{\theta,y}} \nu_{1_\psi}(L) & -\chi_{1_{\theta,y}} \nu_{2_\psi}(L) & \cdots \\
-\beta_{21_{\theta,\phi}} & -\beta_{22_{\theta,\phi}} & \cdots & \tau_{21_{\theta,x}} + \rho_{21_\theta} & \tau_{22_{\theta,x}} + \rho_{22_\theta} & \cdots & -\chi_{2_{\theta,y}} \nu_{1_\psi}(L) & -\chi_{2_{\theta,y}} \nu_{2_\psi}(L) & \cdots \\
\vdots & \vdots & \vdots & \vdots & \vdots & \vdots & \vdots & \vdots & \\
-\delta_{11_{\psi,\phi}} & -\delta_{12_{\psi,\phi}} & \cdots & -\chi_{1_{\psi,y}} \nu_{1_\theta}(L) & -\chi_{1_{\psi,y}} \nu_{2_\theta}(L) & \cdots & \varepsilon_{11} & \varepsilon_{12} & \\
-\delta_{21_{\psi,\phi}} & -\delta_{22_{\psi,\phi}} & & -\chi_{2_{\psi,y}} \nu_{1_\theta}(L) & -\chi_{2_{\psi,y}} \nu_{2_\theta}(L) & \cdots & \varepsilon_{21} & \varepsilon_{22} & \\
\vdots & \vdots & \vdots & \vdots & \vdots & \vdots & \vdots & \vdots &
\end{bmatrix}
$$

$$\gamma_{i_{(\cdot)}} \triangleq M_r \nu_{i_{(\cdot)}}(L) + \int_0^L \sigma(s)\nu_{i_{(\cdot)}}(s)ds$$

$$\chi^{()}_{i_{(\cdot)(\cdot\cdot)}} \triangleq M_r a_{r_{(\cdot\cdot)}} \nu^{()}_{i_{(\cdot)}}(L)$$

Note: For compactness in notation note that $J_{r_{\phi,\theta,\psi}}$ has been used in lieu of $J_{r_{x,y,z}}$

$$\rho_{ij_{(\cdot)}} \triangleq M_r \nu_{i_{(\cdot)}}(L)\nu_{j_{(\cdot)}}(L)$$

$$\beta_{ij_{(\cdot)(\cdot\cdot)}} \triangleq M_r a_{r_y} \nu'_{i_{(\cdot)}}(L)\nu'_{j_{(\cdot\cdot)}}(L) a_{r_x}$$

$$\alpha_{i_{(\cdot)}} \triangleq (J_{r_{(\cdot)}} + M_r a^2_{r_y} + M_r a^2_{r_x})\nu_{i_{(\cdot)}}(L) + \int_0^L \kappa(s)\nu_{i_{(\cdot)}}(s)ds$$

$$\omega_{i_{(\cdot)(\cdot\cdot)}} \triangleq M_r L a_{r_{(\cdot\cdot)}} \nu_{i_{(\cdot)}}(L)$$

$$\delta_{ij_{(\cdot)(\cdot\cdot)}} \triangleq M_r \nu_{i_{(\cdot)}}(L)\nu_{j_{(\cdot\cdot)}}(L) a_{r_x}$$

$$\tau_{ij_{(\cdot)(\cdot\cdot)}} \triangleq M_r a^2_{r_{(\cdot\cdot)}} \nu'_{i_{(\cdot)}}(L)\nu'_{j_{(\cdot)}}(L) + J_{r_{(\cdot)}} \nu'_{i_{(\cdot)}}(L)\nu'_{j_{(\cdot)}}(L) + \int_0^L \sigma(s)\nu_{i_{(\cdot)}}(s)\nu_{j_{(\cdot)}}(s)ds$$

$$\zeta_{i_{(\cdot)(\cdot\cdot)}} \triangleq (M_r a^2_{r_{(\cdot\cdot)}} + J_{r_{(\cdot)}})\nu'_{i_{(\cdot)}}(L) + \int_0^L \sigma(s)\nu_{i_{(\cdot)}}(s)sds + M_r L \nu_{i_{(\cdot)}}(L)$$

$$\varepsilon_{ij} \triangleq M_r a^2_{r_y} \nu_{i_\psi}(L)\nu_{j_\psi}(L) + J_{r_z} \nu_{i_\psi}(L)\nu_{j_\psi}(L) + M_r \nu_{i_\psi}(L) a^2_{r_x} \nu_{j_\psi}(L) + \int_0^L \kappa(s)\nu_{i_\psi}(s)\nu_{j_\psi}(s)ds$$

$$D_R = \begin{bmatrix} 0. & 0. & 0. \\ 0. & 0. & 0. \\ 0. & 0. & 0. \\ 1. & 0. & 0. \\ 0. & 1. & 0. \\ 0. & 0. & 1. \end{bmatrix}$$

$$
B = \begin{bmatrix}
1. & 0. & 1. & 1. & 0. & 0. & 0. & 0. & 0. & 0. & 0. & 0. \\
0. & 1. & 0. & 0. & 1. & 1. & 0. & 0. & 0. & 0. & 0. & 0. \\
0. & 0. & 0. & 0. & 0. & 0. & 0. & 0. & 0. & 0. & 0. & 0. \\
0. & L & 0. & 0. & s_1 & s_2 & 1. & 0. & 0. & 1. & 0. & 0. \\
-L & 0. & -s_1 & -s_2 & 0. & 0. & 0. & 1. & 0. & 0. & 1. & 0. \\
-a_{r_y} & a_{r_x} & 0. & 0. & 0. & 0. & 0. & 0. & 1. & 0. & 0. & 1. \\
0. & \nu_{1_\phi}(L) & 0. & 0. & \nu_{1_\phi}(s_1) & \nu_{1_\phi}(s_2) & \nu_{1_\phi}'(L) & 0. & 0. & 0. & 0. & 0. \\
0. & \nu_{2_\phi}(L) & 0. & 0. & \nu_{2_\phi}(s_1) & \nu_{2_\phi}(s_2) & \nu_{2_\phi}'(L) & 0. & 0. & 0. & 0. & 0. \\
\vdots & \vdots & \vdots & \vdots & \vdots & \vdots & \vdots & \vdots & \vdots & \vdots & \vdots & \vdots \\
-\nu_{1_\theta}(L) & 0. & -\nu_{1_\theta}(s_1) & -\nu_{1_\theta}(s_2) & 0. & 0. & 0. & \nu_{1_\theta}'(L) & 0. & 0. & 0. & 0. \\
-\nu_{2_\theta}(L) & 0. & -\nu_{2_\theta}(s_1) & -\nu_{2_\theta}(s_2) & 0. & 0. & 0. & \nu_{2_\theta}'(L) & 0. & 0. & 0. & 0. \\
\vdots & \vdots & \vdots & \vdots & \vdots & \vdots & \vdots & \vdots & \vdots & \vdots & \vdots & \vdots \\
-a_{r_y}\nu_{1_\psi}(L) & a_{r_x}\nu_{1_\psi}(L) & 0. & 0. & 0. & 0. & 0. & 0. & \nu_{1_\psi}(L) & 0. & 0. & 0. \\
-a_{r_y}\nu_{2_\psi}(L) & a_{r_x}\nu_{2_\psi}(L) & 0. & 0. & 0. & 0. & 0. & 0. & \nu_{2_\psi}(L) & 0. & 0. & 0. \\
\vdots & \vdots & \vdots & \vdots & \vdots & \vdots & \vdots & \vdots & \vdots & \vdots & \vdots & \vdots
\end{bmatrix}
$$

$s_1$, $s_2$ = location of proof mass actuators

$$K_{EE} = \begin{bmatrix} k''_{11_\phi} & k''_{12_\phi} & \cdots & 0 & 0 & \cdots & 0 & 0 & \cdots \\ k''_{21_\phi} & k''_{22_\phi} & \cdots & 0 & 0 & \cdots & 0 & 0 & \cdots \\ \vdots & \vdots & \vdots & \vdots & \vdots & \vdots & \vdots & \vdots & \\ 0 & 0 & \cdots & k''_{11_\theta} & k''_{12_\theta} & \cdots & 0 & 0 & \cdots \\ 0 & 0 & \cdots & k''_{21_\theta} & k''_{22_\theta} & \cdots & 0 & 0 & \cdots \\ \vdots & \vdots & \vdots & \vdots & \vdots & & \vdots & \vdots & \\ 0 & 0 & \cdots & 0 & 0 & \cdots & k'_{11_\psi} & k'_{12_\psi} & \cdots \\ 0 & 0 & \cdots & 0 & 0 & & k'_{21_\psi} & k'_{22_\psi} & \cdots \\ \vdots & \vdots & & \vdots & \vdots & \vdots & \vdots & \vdots & \end{bmatrix}$$

where

$$k_{ij_{(\cdot)}}^{(\cdot\cdot)} \triangleq \int_0^L EI_{(\cdot)} \nu_{i_{(\cdot)}}^{(\cdot)}(s) \nu_{j_{(\cdot)}}^{(\cdot)}(s) ds$$

note: for the $\psi$ terms, GJ is required in place of EI.

Measurement Equations

Per Taylor et. al., both the shuttle body and reflector are instrumented to obtain inertial attitude, angular velocity, and acceleration measurements for all axes. Additionally, two axis accelerometers are located at intervals of 10 feet along the mast.

The corresponding measurement vector is defined by

$$z^T = [z_A^T, z_\omega^T, z_a^T]$$

where

$$z_A^T = [\phi_s, \theta_s, \psi_s, \phi_r, \theta_r, \psi_r] \ , \quad z_\omega = \dot{z}_A$$

$$z_a^T = [\ddot{x}_s, \ddot{y}_s, \ddot{z}_s, \ddot{x}_r, \ddot{y}_r, \ddot{z}_r, \ddot{x}_{b_i}, \ddot{y}_{b_i}; \ i = 1 \rightarrow 12]$$

and $(\cdot)_s$, $(\cdot)_r$, and $(\cdot)_{b_i}$ denote shuttle body, reflector body and location of the $i^{th}$ beam sensor respectively.

Manipulating the kinematical equations previously defined yields the following measurement equation,

$$\bar{z} = \begin{bmatrix} \bar{z}_A \\ \bar{z}_\omega \\ \bar{z}_a \end{bmatrix} = \begin{bmatrix} P_A \\ 0 \\ -QM^{-1}K \end{bmatrix} q + \begin{bmatrix} 0 \\ R_\omega \\ 0 \end{bmatrix} \dot{q} + \begin{bmatrix} 0 & I & 0 & 0 \\ 0 & 0 & I & 0 \\ QM^{-1}D & 0 & 0 & I \end{bmatrix} v$$

where,

$$\bar{z}_a = Q\ddot{q}$$

$$R_\omega = P_A, \quad \bar{z} = z - \begin{bmatrix} 0 \\ 0 \\ QM^{-1}B \end{bmatrix} u; \quad \text{M, K and D as previously defined}$$

$$\underline{v}^T = [w \; v_A \; v_\omega \; v_a]$$

$$P_A = \begin{bmatrix} 0. & 0. & 0. & 1. & 0. & 0. & 0. & 0. & \cdots & 0. & 0. & \cdots & 0. & 0. & \cdots \\ 0. & 0. & 0. & 0. & 1. & 0. & 0. & 0. & \cdots & 0. & 0. & \cdots & 0. & 0. & \cdots \\ 0. & 0. & 0. & 0. & 0. & 1. & 0. & 0. & \cdots & 0. & 0. & \cdots & 0. & 0. & \cdots \\ 0. & 0. & 0. & 1. & 0. & 0. & \nu_{1_\phi}'(L) & \nu_{2_\phi}'(L) & \cdots & 0. & 0. & \cdots & 0. & 0. & \cdots \\ 0. & 0. & 0. & 0. & 1. & 0. & 0. & 0. & \cdots & \nu_{1_\theta}'(L) & \nu_{2_\theta}'(L) & \cdots & 0. & 0. & \\ 0. & 0. & 0. & 0. & 0. & 1. & 0. & 0. & \cdots & 0. & 0. & \cdots & \nu_{1_\psi}(L) & \nu_{2_\psi}(L) & \cdots \end{bmatrix}$$

$$
Q = \begin{bmatrix}
1. & 0. & 0. & 0. & 0. & 0. & 0. & 0. & \cdots & 0. & 0. & \cdots & 0. & 0. & \cdots \\
0. & 1. & 0. & 0. & 0. & 0. & 0. & 0. & \cdots & 0. & 0. & \cdots & 0. & 0. & \cdots \\
0. & 0. & 1. & 0. & 0. & 0. & 0. & 0. & \cdots & 0. & 0. & \cdots & 0. & 0. & \cdots \\
1. & 0. & 0. & 0. & -L. & a_{r_y} & 0. & 0. & \cdots & -\nu_{1_\theta}(L) & -\nu_{2_\theta}(L) & \cdots & \nu_{1_\psi}(L)\, a_{r_y} & \nu_{2_\psi}(L)\, a_{r_y} & \cdots \\
0. & 1. & 0. & L & 0. & -a_{r_x} & \nu_{1_\phi}(L) & \nu_{2_\phi}(L) & \cdots & & & & -\nu_{1_\psi}(L)\, a_{r_x} & -\nu_{2_\psi}(L)\, a_{r_x} & \cdots \\
0. & 0. & 1. & -a_{r_y} & a_{r_x} & 0. & -\nu'_{1_\phi}(L)\, a_{r_y} & -\nu_{2_\phi}(L)\, a_{r_y} & \cdots & \nu'_{1_\theta}(L) & \nu'_{2_\theta}(L) & \cdots & 0. & 0. & \cdots \\
1. & 0. & 0. & 0. & -b_1 & 0. & 0. & 0. & \cdots & -\nu_{1_\theta}(b_1) & -\nu_{2_\theta}(b_1) & \cdots & 0. & 0. & \cdots \\
1. & 0. & 0. & 0. & -b_2 & 0. & 0. & 0. & \cdots & -\nu_{1_\theta}(b_2) & -\nu_{2_\theta}(b_2) & \cdots & 0. & 0. & \cdots \\
1. & 0. & 0. & 0. & -b_3 & 0. & 0. & 0. & \cdots & -\nu_{1_\theta}(b_3) & -\nu_{2_\theta}(b_3) & \cdots & 0. & 0. & \cdots \\
\vdots & \vdots & \vdots & \vdots & \vdots & \vdots & \vdots & \vdots & \vdots & \vdots & \vdots & \vdots & \vdots & \vdots & \\
0. & 1. & 0. & b_1 & 0. & 0. & \nu_{1_\phi}(b_1) & \nu_{2_\phi}(b_1) & \cdots & 0. & 0. & \cdots & 0. & 0. & \cdots \\
0. & 1. & 0. & b_2 & 0. & 0. & \nu_{1_\phi}(b_2) & \nu_{2_\phi}(b_2) & \cdots & 0. & 0. & \cdots & 0. & 0. & \cdots \\
0. & 1. & 0. & b_3 & 0. & 0. & \nu_{1_\phi}(b_3) & \nu_{2_\phi}(b_3) & \cdots & 0. & 0. & \cdots & 0. & 0. & \cdots \\
\vdots & \vdots & \vdots & \vdots & \vdots & \vdots & \vdots & \vdots & \vdots & \vdots & \vdots & \vdots & \vdots & \vdots &
\end{bmatrix}
$$

## Line of Sight Calculation

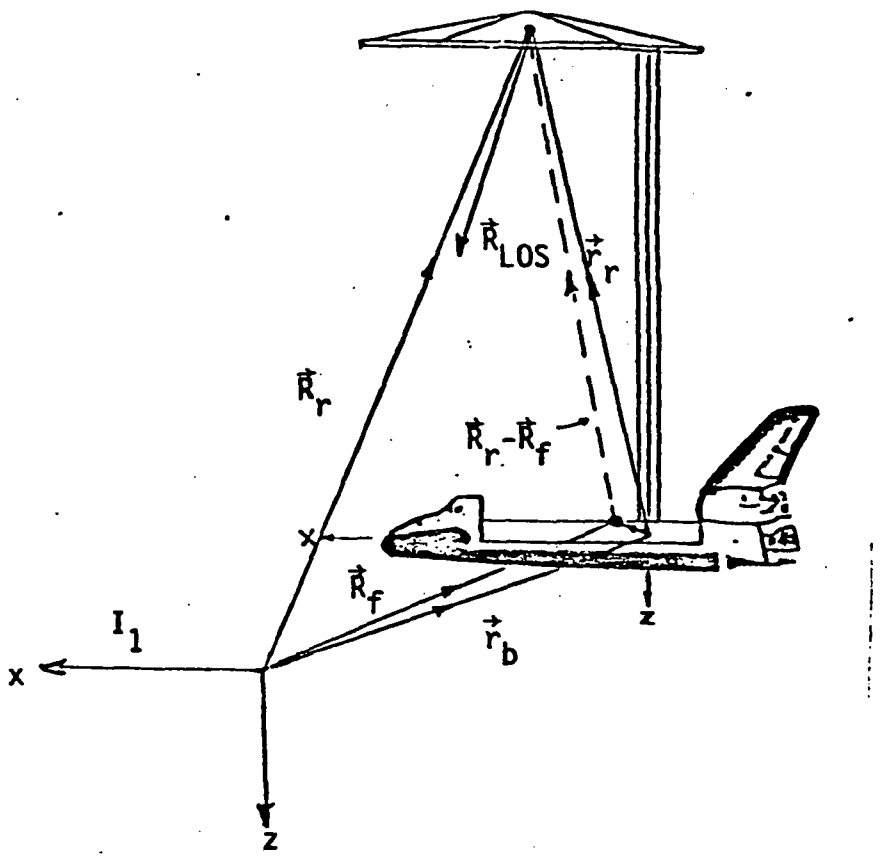


Figure 3 - Line-of-Sight Definitions

The line-of-sight (LOS) is defined by a unit vector ($\vec{R}_{LOS}$) from the feed which is reflected at the center of the reflector. The expression for $\vec{R}_{LOS}$ is easily derived (see Appendix 2) and is given in inertial coordinates by,

$$\vec{R}_{LOS} = \frac{(\vec{R}_r-\vec{R}_f)-2[(\vec{R}_r-\vec{R}_f)\cdot\vec{R}_a]\vec{R}_a}{|(\vec{R}_r-\vec{R}_f)-2[(\vec{R}_r-\vec{R}_f)\cdot\vec{R}_a]\vec{R}_a|}$$

where $\vec{R}_a = I_4^T \begin{pmatrix}0\\0\\1\end{pmatrix} = I_1^T T_b^T T_{bd}^T \begin{pmatrix}0\\0\\1\end{pmatrix}$ and $\vec{R}_r$, $\vec{R}_f$ are defined in the above figure.

The LOS error is affected by both the pointing error of the Shuttle body and the misalignment of the reflector due to bending of the mast. The LOS error is given by,

$$LOS_{error} = \sin^{-1} |D_T \times R_{LOS}|$$

where $D_T$ is the target direction. For small LOS error angles,

$$LOS_{error} = |D_T \times R_{LOS}|$$

APPENDIX I

## Translational Equations

(7a) $$(M_s+M_r+m_b)\ddot{x}-(M_rL+m_bL/2)\ddot{\theta}-M_r\sum_j \nu_{j_\theta}(L)\ddot{n}_{j_\theta}(t)$$

$$-\int_0^L \sigma(s)\sum_j \nu_{j_\theta}(s)\ddot{n}_{j_\theta}(t)ds+M_ra_{r_y}\ddot{\psi}+M_ra_{r_y}\sum_j \nu_{j_\psi}(L)\ddot{n}_{j_\psi}(t)$$

$$= F_{r_x}+f_{1_x}+f_{2_x}$$

(7b) $$(M_s+M_r+m_b)\ddot{y}+(M_rL+m_bL/2)\ddot{\phi}-M_ra_{r_x}\ddot{\psi}-M_ra_{r_x}\sum_j \nu_{j_\psi}(L)\ddot{n}_{j_\psi}(t)$$

$$+\int_0^L \sigma(s)\sum_j \nu_{j_\phi}(s)\ddot{n}_{j_\phi}(t)ds+M_r\sum_j \nu_{j_\phi}(L)\ddot{n}_{j_\phi}(t)$$

$$= F_{r_y}+f_{1_y}+f_{2_y}$$

(7c) $$(M_s+M_r+m_b)\ddot{z}+M_ra_{r_x}\ddot{\theta}-M_ra_{r_y}\ddot{\phi}+M_ra_{r_x}\sum_j \nu'_{j_\theta}(L)\ddot{n}_{j_\theta}(t)$$

$$-M_ra_{r_y}\sum_j \nu'_{j_\phi}(L)\ddot{n}_{j_\phi}(t) = 0$$

## Rotational Equations

(7d) $$(J_{s_x}+J_{r_x}+M_rL^2+M_ra^2_{r_y}+m_bL^2/3)\ddot{\phi}+(m_bL/2+M_rL)\ddot{y}$$

$$-M_ra_{r_y}\ddot{z}-M_ra_{r_y}a_{r_x}\ddot{\theta}-M_ra_{r_y}a_{r_x}\sum_j \nu'_{j_\theta}(L)\ddot{n}_{j_\theta}(t)$$

$$+(M_ra^2_{r_y}+J_{r_x})\sum_j \nu'_{j_\phi}(L)\ddot{n}_{j_\phi}(t)+\int_0^L \sigma(s)s\sum_j \nu_{j_\phi}(s)\ddot{n}_{j_\phi}(t)ds$$

$$+M_rL\sum_j \nu_{j_\phi}(L)\ddot{n}_{j_\phi}(t)+(J_{s_{xz}}-M_rLa_{r_x})\ddot{\psi}-M_rLa_{r_x}\sum_j \nu_{j_\psi}(L)\ddot{n}_{j_\psi}(t)$$

$$= T_{s_\phi} + T_{r_\phi} + T_{D_\phi} + F_{r_y} L + f_{1_y} s_1 + f_{2_y} s_2$$

(7e) $$(J_{s_y} + J_{r_y} + M_r L^2 + M_r a_{r_x}^2 + m_b L^2/3)\ddot{\theta} - (M_r L + m_b L/2)\ddot{x}$$

$$+ M_r L \sum_j \nu_{j_\theta}(L)\ddot{\eta}_{j_\theta}(t) - M_r L a_{r_y} \ddot{\psi} - M_r L a_{r_y} \sum_j \nu_{j_\psi}(L)\ddot{\eta}_{j_\psi}(t)$$

$$+ M_r a_{r_x} \ddot{z} - M_r a_{r_x} a_{r_y} \ddot{\phi} + (M_r a_{r_x}^2 + J_{r_y}) \sum_j \nu'_{j_\theta}(L)\ddot{\eta}_{j_\theta}(t)$$

$$- M_r a_{r_x} a_{r_y} \sum_j \nu'_{j_\phi}(L)\ddot{\eta}_{j_\phi}(t) + \int_0^L \sigma(s) s \sum \nu_{j_\theta}(s)\ddot{\eta}_{j_\theta} ds$$

$$= T_{s_\theta} + T_{r_\theta} + T_{D_\theta} - f_{1_x} s_1 - f_{2_x} s_2 - F_{r_x} L$$

(7f) $$(J_{s_z} + J_{r_z} + J_{b_z} + M_r a_{r_y}^2 + M_r a_{r_x}^2)\ddot{\psi} + M_r a_{r_y} \ddot{x} - M_r a_{r_y} L\ddot{\theta}$$

$$+ (J_{r_z} + M_r a_{r_y}^2 + M_r a_{r_x}^2) \sum_j \nu_{j_\psi}(L)\ddot{\eta}_{j_\psi}(t) - M_r a_{r_y} \sum_j \nu_{j_\theta}(L)\ddot{\eta}_{j_\theta}(t)$$

$$- M_r a_{r_x} \ddot{y} + (J_{s_{xz}} - M_r L a_{r_x})\ddot{\psi} - M_r a_{r_x} \sum_j \nu_{j_\phi}(L)\ddot{\eta}_{j_\phi}(t) + \int_0^L \kappa(s) \sum_j \nu_{j_\psi}(s)\ddot{\eta}_{j_\psi}(t) ds$$

$$= T_{s_\psi} + T_{r_\psi} + T_{D_\psi} - F_{r_x} a_{r_y} + F_{r_y} a_{r_x}$$

## Beam Bending and Torsion Equations

(7g) $$(M_r \nu_{i_\phi}(L) + \int_0^L \sigma(s)\nu_{i_\phi}(s) ds)\ddot{y} - M_r \nu_{i_\phi}(L) a_{r_x} \ddot{\psi}$$

$$- M_r a_{r_y} \nu'_{i_\phi}(L)\ddot{z} - M_r a_{r_y} a_{r_x} \nu'_{i_\phi}(L)\ddot{\theta}$$

$$+ (M_r \nu_{i_\phi}(L) L + M_r a_{r_y}^2 \nu'_{i_\phi}(L) + J_{r_x} \nu'_{i_\phi}(L) + \int_0^L \sigma(s) s \nu_{i_\phi}(s) ds)\ddot{\phi}$$

$$+ M_r \nu_{i_\phi}(L)\sum_j \nu_{j_\phi}(L)\ddot{\eta}_{j_\phi}(t) - M_r \nu_{i_\phi}(L)\sum_j \nu_{j_\psi}(L)\ddot{\eta}_{j_\psi}(t) a_{r_x}$$

$$-M_r a_{r_y} a_{r_x} \nu'_{i_\phi}(L)\sum_j \nu'_{j_\theta}(L)\ddot{\eta}_{j_\theta}(t) + M_r a^2_{r_y} \nu'_{i_\phi}(L)\sum_j \nu'_{j_\phi}(L)\ddot{\eta}_{j_\phi}(t)$$

$$+J_{r_x} \nu'_{i_\phi}(L)\sum_j \nu'_{j_\phi}(L)\ddot{\eta}_{j_\phi}(t) + \int_0^L \sigma(s)\nu_{i_\phi}(s)\sum_j \nu_{j_\phi}(s)\ddot{\eta}_{j_\phi}(t)ds$$

$$+ \int_0^L EI_\phi(\sum_j \nu''_{j_\phi}(s)\eta_{j_\phi})\nu''_{i_\phi}(s)ds$$

$$= T_{r_\phi}\nu'_{i_\phi}(L) + f_{1_y}\nu_{i_\phi}(s_1) + f_{2_y}\nu_{i_\phi}(s_2) + F_{r_y}\nu_{i_\phi}(L)$$

(7h) $$-(M_r \nu_{i_\theta}(L) + \int_0^L \sigma(s)\nu_{i_\theta}(s)ds)\ddot{x} + M_r \nu'_{i_\theta}(L) a_{r_x}\ddot{z}$$

$$-M_r \nu_{i_\theta}(L) a_{r_y}\ddot{\psi} - M_r \nu'_{i_\theta}(L) a_{r_x} a_{r_y}\ddot{\phi}$$

$$+(M_r \nu_{i_\theta}(L)L + M_r \nu'_{i_\theta}(L) a^2_{r_x} + J_{r_y}\nu'_{i_\theta}(L) + \int_0^L \sigma(s)\nu_{i_\theta}(s)sds)\ddot{\theta}$$

$$+M_r \nu_{i_\theta}(L)\sum_j \nu_{j_\theta}(L)\ddot{\eta}_{j_\theta}(t) - M_r \nu_{i_\theta}(L)\sum_j \nu_{j_\psi}(L)\ddot{\eta}_{j_\psi}(t) a_{r_y}$$

$$+M_r \nu'_{i_\theta}(L)\sum_j \nu'_{j_\theta}(L)\ddot{\eta}_{j_\theta}(t) a^2_{r_x} - M_r \nu'_{i_\theta}(L)\sum_j \nu'_{j_\phi}(L)\ddot{\eta}_{j_\phi}(t) a_{r_x} a_{r_y}$$

$$+J_{r_y}\nu'_{i_\theta}(L)\sum_j \nu'_{j_\theta}(L)\ddot{\eta}_{j_\theta}(t) + \int_0^L \sigma(s)\nu_{i_\theta}(s)\sum_j \nu_{j_\theta}(s)\ddot{\eta}_{j_\theta}(t)ds$$

$$+ \int_0^L EI_\theta(\sum_j \nu''_{j_\theta}(s)\eta_{j_\theta}(t))\nu''_{i_\theta}(s)ds$$

$$= T_{r_\theta}\nu'_{i_\theta}(L) - f_{1_x}\nu_{i_\theta}(s_1) - f_{2_x}\nu_{i_\theta}(s_2) - F_{r_x}\nu_{i_\theta}(L)$$

$$
\begin{aligned}
(7i)\quad & M_r a_{r_y} \nu_{i_\psi}(L)\ddot{x} - M_r a_{r_y} L \nu_{i_\psi}(L)\ddot{\theta} - M_r \nu_{i_\psi}(L) a_{r_x} \ddot{y} \\
& - M_r \nu_{i_\psi}(L) a_{r_x} L\ddot{\phi} - M_r a_{r_y} \nu_{i_\psi}(L) \sum_j \nu_{j_\theta}(L) \ddot{n}_{j_\theta}(t) \\
& + \left(M_r a_{r_y}^2 \nu_{i_\psi}(L) + M_r a_{r_x}^2 \nu_{i_\psi}(L) + J_{r_z} \nu_{i_\psi}(L) + \int_0^L \kappa(s) \nu_{i_\psi}(s) ds\right)\ddot{\psi} \\
& + M_r a_{r_y}^2 \nu_{i_\psi}(L) \sum_j \nu_{j_\psi}(L) \ddot{n}_{j_\psi} + J_{r_z} \nu_{i_\psi}(L) \sum_j \nu_{j_\psi}(L) \ddot{n}_{j_\psi} + \int_0^L \kappa(s) \nu_{i_\psi}(s) \sum_j \nu_{j_\psi}(s) \ddot{n}_{j_\psi}(t) ds \\
& - M_r a_{r_x} \nu_{i_\psi}(L) \sum_j \nu_{j_\phi}(L) \ddot{n}_{j_\phi}(t) + M_r \nu_{i_\psi}(L) a_{r_x}^2 \sum_j \nu_{j_\psi}(L) \ddot{n}_{j_\psi}(t) \\
& + \int_0^L EI_\psi \left(\sum_j \nu'_{j_\psi}(s) \ddot{n}_{j_\psi}(t)\right) \nu'_{i_\psi}(s) ds \\
& = T_{r_\psi} \nu_{i_\psi}(L) - F_{r_x} a_{r_y} \nu_{i_\psi}(L) + F_{r_y} a_{r_x} \nu_{i_\psi}(L)
\end{aligned}
$$

APPENDIX 2

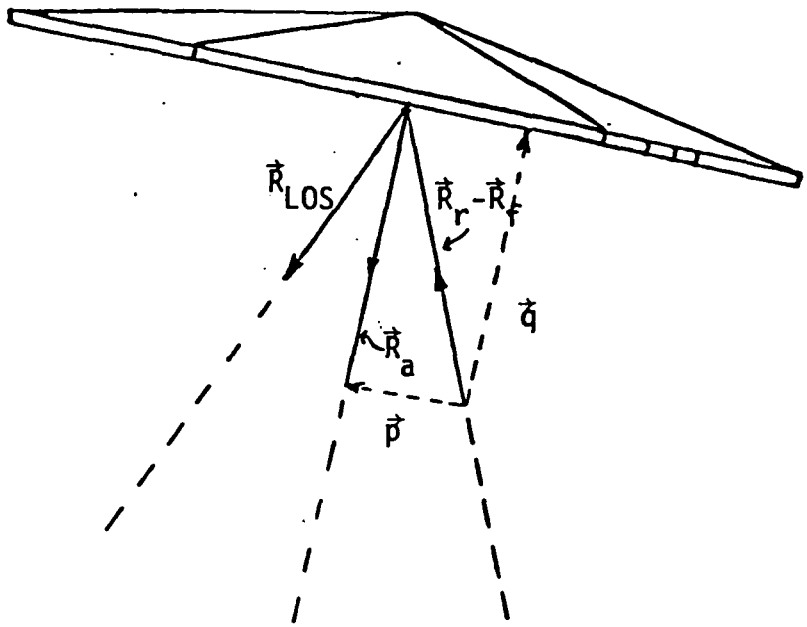


From the above figure,

(1) $$\vec{R}_r-\vec{R}_f = \vec{p}+\vec{q} \quad \text{and} \quad \vec{R}_{LOS} = \frac{\vec{p}-\vec{q}}{|\vec{p}-\vec{q}|}$$

It is easily seen that,

$$\vec{q} = +[(\vec{R}_r-\vec{R}_f)\cdot\vec{R}_a]\vec{R}_a$$

and from (1),

$$\vec{p} = (\vec{R}_r-\vec{R}_f)-\vec{q}$$

Then $$\vec{p}-\vec{q} = (\vec{R}_r-\vec{R}_f) - 2\vec{q}$$

$$= (\vec{R}_r-\vec{R}_f) - 2[(\vec{R}_r-\vec{R}_f)\cdot\vec{R}_a]\vec{R}_a$$

and

$$\vec{R}_{LOS} = \frac{(\vec{R}_r-\vec{R}_f)-2[(\vec{R}_r-\vec{R}_f)\cdot\vec{R}_a]\vec{R}_a}{|(\vec{R}_r-\vec{R}_f)-2[(\vec{R}_r-\vec{R}_f)\cdot\vec{R}_a]\vec{R}_a|}$$

where $\vec{R}_a$ has unit length.

APPENDIX 3

In the following example, the beam was modeled with four finite elements using cubic polynomial shape functions for bending and linear shape functions for torsion.

the mass matrix ( 26 by 26 )

| | 1 | 2 | 3 | 4 | 5 | 6 |
|---|---|---|---|---|---|---|
| 1 | 6.40e+03 | 0. | 0. | 0. | -2.42e+03 | 4.04e+02 |
| 2 | 0. | 6.40e+03 | 0. | 2.42e+03 | 0. | 2.33e+02 |
| 3 | 0. | 0. | 6.40e+03 | -4.04e+02 | -2.33e+02 | 0. |
| 4 | 0. | 2.42e+03 | -4.04e+02 | 1.20e+06 | 7.58e+03 | -1.15e+05 |
| 5 | -2.42e+03 | 0. | -2.33e+02 | 7.58e+03 | 7.08e+06 | -5.25e+04 |
| 6 | 4.04e+02 | 2.33e+02 | 0. | -1.15e+05 | -5.25e+04 | 7.11e+06 |
| 7 | 0. | 3.11e+00 | 0. | 5.05e+01 | 0. | 0. |
| 8 | 0. | 0. | 0. | 5.47e+01 | 0. | 0. |
| 9 | 0. | 3.11e+00 | 0. | 5.05e+01 | 0. | 0. |
| 10 | 0. | 0. | 0. | 5.47e+01 | 0. | 0. |
| 11 | 0. | 3.11e+00 | 0. | 5.05e+01 | 0. | 0. |
| 12 | 0. | 0. | 0. | 5.47e+01 | 0. | 0. |
| 13 | 0. | 1.40e+01 | 0. | 1.65e+03 | 0. | 2.33e+02 |
| 14 | 0. | 8.41e+00 | 4.04e+02 | -1.79e+04 | -7.58e+03 | 0. |
| 15 | -3.11e+00 | 0. | 0. | 0. | 5.05e+01 | 0. |
| 16 | 0. | 0. | 0. | 0. | 5.47e+01 | 0. |
| 17 | -3.11e+00 | 0. | 0. | 0. | 5.05e+01 | 0. |
| 18 | 0. | 0. | 0. | 0. | 5.47e+01 | 0. |
| 19 | -3.11e+00 | 0. | 0. | 0. | 5.05e+01 | 0. |
| 20 | 0. | 0. | 0. | 0. | 5.47e+01 | 0. |
| 21 | -1.40e+01 | 0. | 0. | 0. | 1.65e+03 | -4.04e+02 |
| 22 | -8.41e+00 | 0. | 2.33e+02 | -7.58e+03 | -9.18e+03 | 0. |
| 23 | 0. | 0. | 0. | 0. | 0. | 3.25e+01 |
| 24 | 0. | 0. | 0. | 0. | 0. | 3.25e+01 |
| 25 | 0. | 0. | 0. | 0. | 0. | 3.25e+01 |
| 26 | 4.04e+02 | 2.33e+02 | 0. | 3.03e+04 | -5.25e+04 | 2.75e+04 |

| | 7 | 8 | 9 | 10 | 11 | 12 |
|---|---|---|---|---|---|---|
| 1 | 0. | 0. | 0. | 0. | 0. | 0. |
| 2 | 3.11e+00 | 0. | 3.11e+00 | 0. | 3.11e+00 | 0. |
| 3 | 0. | 0. | 0. | 0. | 0. | 0. |
| 4 | 5.05e+01 | 5.47e+01 | 5.05e+01 | 5.47e+01 | 5.05e+01 | 5.47e+01 |
| 5 | 0. | 0. | 0. | 0. | 0. | 0. |
| 6 | 0. | 0. | 0. | 0. | 0. | 0. |
| 7 | 2.31e+00 | 0. | 3.99e-01 | 3.12e+00 | 0. | 0. |
| 8 | 0. | 6.25e+01 | -3.12e+00 | -2.34e+01 | 0. | 0. |
| 9 | 3.99e-01 | -3.12e+00 | 2.31e+00 | 0. | 3.99e-01 | 3.12e+00 |
| 10 | 3.12e+00 | -2.34e+01 | 0. | 6.25e+01 | -3.12e+00 | -2.34e+01 |
| 11 | 0. | 0. | 3.99e-01 | -3.12e+00 | 2.31e+00 | 0. |
| 12 | 0. | 0. | 3.12e+00 | -2.34e+01 | 0. | 6.25e+01 |
| 13 | 0. | 0. | 0. | 0. | 3.99e-01 | -3.12e+00 |
| 14 | 0. | 0. | 0. | 0. | 3.12e+00 | -2.34e+01 |
| 15 | 0. | 0. | 0. | 0. | 0. | 0. |
| 16 | 0. | 0. | 0. | 0. | 0. | 0. |
| 17 | 0. | 0. | 0. | 0. | 0. | 0. |
| 18 | 0. | 0. | 0. | 0. | 0. | 0. |
| 19 | 0. | 0. | 0. | 0. | 0. | 0. |
| 20 | 0. | 0. | 0. | 0. | 0. | 0. |
| 21 | 0. | 0. | 0. | 0. | 0. | 0. |
| 22 | 0. | 0. | 0. | 0. | 0. | 0. |
| 23 | 0. | 0. | 0. | 0. | 0. | 0. |
| 24 | 0. | 0. | 0. | 0. | 0. | 0. |
| 25 | 0. | 0. | 0. | 0. | 0. | 0. |
| 26 | 0. | 0. | 0. | 0. | 0. | 0. |

| | 13 | 14 | 15 | 16 | 17 | 18 |
|---|---|---|---|---|---|---|
| 1 | 0. | 0. | -3.11e+00 | 0. | -3.11e+00 | 0. |
| 2 | 1.40e+01 | 8.41e+00 | 0. | 0. | 0. | 0. |
| 3 | 0. | 4.04e+02 | 0. | 0. | 0. | 0. |
| 4 | 1.65e+03 | -1.79e+04 | 0. | 0. | 0. | 0. |
| 5 | 0. | -7.58e+03 | 5.05e+01 | 5.47e+01 | 5.05e+01 | 5.47e+01 |
| 6 | 2.33e+02 | 0. | 0. | 0. | 0. | 0. |
| 7 | 0. | 0. | 0. | 0. | 0. | 0. |
| 8 | 0. | 0. | 0. | 0. | 0. | 0. |
| 9 | 0. | 0. | 0. | 0. | 0. | 0. |
| 10 | 0. | 0. | 0. | 0. | 0. | 0. |
| 11 | 3.99e-01 | 3.12e+00 | 0. | 0. | 0. | 0. |
| 12 | -3.12e+00 | -2.34e+01 | 0. | 0. | 0. | 0. |
| 13 | 1.36e+01 | 5.29e+00 | 0. | 0. | 0. | 0. |
| 14 | 5.29e+00 | 1.81e+04 | 0. | 0. | 0. | 0. |
| 15 | 0. | 0. | 2.31e+00 | 0. | 3.99e-01 | 3.12e+00 |
| 16 | 0. | 0. | 0. | 6.25e+01 | -3.12e+00 | -2.34e+01 |
| 17 | 0. | 0. | 3.99e-01 | -3.12e+00 | 2.31e+00 | 0. |
| 18 | 0. | 0. | 3.12e+00 | -2.34e+01 | 0. | 6.25e+01 |
| 19 | 0. | 0. | 0. | 0. | 3.99e-01 | -3.12e+00 |
| 20 | 0. | 0. | 0. | 0. | 3.12e+00 | -2.34e+01 |
| 21 | 0. | 0. | 0. | 0. | 0. | 0. |
| 22 | 0. | 7.58e+03 | 0. | 0. | 0. | 0. |
| 23 | 0. | 0. | 0. | 0. | 0. | 0. |
| 24 | 0. | 0. | 0. | 0. | 0. | 0. |
| 25 | 0. | 0. | 0. | 0. | 0. | 0. |
| 26 | 2.33e+02 | 0. | 0. | 0. | 0. | 0. |

| | 19 | 20 | 21 | 22 | 23 | 24 |
|---|---|---|---|---|---|---|
| 1 | -3.11e+00 | 0. | -1.40e+01 | -8.41e+00 | 0. | 0. |
| 2 | 0. | 0. | 0. | 0. | 0. | 0. |
| 3 | 0. | 0. | 0. | 2.33e+02 | 0. | 0. |
| 4 | 0. | 0. | 0. | -7.58e+03 | 0. | 0. |
| 5 | 5.05e+01 | 5.47e+01 | 1.65e+03 | -9.18e+03 | 0. | 0. |
| 6 | 0. | 0. | -4.04e+02 | 0. | 3.25e+01 | 3.25e+01 |
| 7 | 0. | 0. | 0. | 0. | 0. | 0. |
| 8 | 0. | 0. | 0. | 0. | 0. | 0. |
| 9 | 0. | 0. | 0. | 0. | 0. | 0. |
| 10 | 0. | 0. | 0. | 0. | 0. | 0. |
| 11 | 0. | 0. | 0. | 0. | 0. | 0. |
| 12 | 0. | 0. | 0. | 0. | 0. | 0. |
| 13 | 0. | 0. | 0. | 0. | 0. | 0. |
| 14 | 0. | 0. | 0. | 7.58e+03 | 0. | 0. |
| 15 | 0. | 0. | 0. | 0. | 0. | 0. |
| 16 | 0. | 0. | 0. | 0. | 0. | 0. |
| 17 | 3.99e-01 | 3.12e+00 | 0. | 0. | 0. | 0. |
| 18 | -3.12e+00 | -2.34e+01 | 0. | 0. | 0. | 0. |
| 19 | 2.31e+00 | 0. | 3.99e-01 | 3.12e+00 | 0. | 0. |
| 20 | 0. | 6.25e+01 | -3.12e+00 | -2.34e+01 | 0. | 0. |
| 21 | 3.99e-01 | -3.12e+00 | 1.36e+01 | 5.29e+00 | 0. | 0. |
| 22 | 3.12e+00 | -2.34e+01 | 5.29e+00 | 9.37e+03 | 0. | 0. |
| 23 | 0. | 0. | 0. | 0. | 1.97e+01 | 4.92e+00 |
| 24 | 0. | 0. | 0. | 0. | 4.92e+00 | 1.97e+01 |
| 25 | 0. | 0. | 0. | 0. | 0. | 4.92e+00 |
| 26 | 0. | 0. | -4.04e+02 | 0. | 0. | 0. |

| | 25 | 26 |
|---|---|---|
| 1 | 0. | 4.04e+02 |
| 2 | 0. | 2.33e+02 |
| 3 | 0. | 0. |
| 4 | 0. | 3.03e+04 |
| 5 | 0. | -5.25e+04 |
| 6 | 3.25e+01 | 2.75e+04 |
| 7 | 0. | 0. |
| 8 | 0. | 0. |
| 9 | 0. | 0. |
| 10 | 0. | 0. |
| 11 | 0. | 0. |
| 12 | 0. | 0. |
| 13 | 0. | 2.33e+02 |
| 14 | 0. | 0. |
| 15 | 0. | 0. |
| 16 | 0. | 0. |
| 17 | 0. | 0. |
| 18 | 0. | 0. |
| 19 | 0. | 0. |
| 20 | 0. | 0. |
| 21 | 0. | -4.04e+02 |
| 22 | 0. | 0. |
| 23 | 0. | 0. |
| 24 | 4.92e+00 | 0. |
| 25 | 1.97e+01 | 4.92e+00 |
| 26 | 4.92e+00 | 2.75e+04 |

the stiffness matrix ( 26 by 26 )

| | 1 | 2 | 3 | 4 | 5 | 6 |
|---|---|---|---|---|---|---|
| 1 | 0. | 0. | 0. | 0. | 0. | 0. |
| 2 | 0. | 0. | 0. | 0. | 0. | 0. |
| 3 | 0. | 0. | 0. | 0. | 0. | 0. |
| 4 | 0. | 0. | 0. | 0. | 0. | 0. |
| 5 | 0. | 0. | 0. | 0. | 0. | 0. |
| 6 | 0. | 0. | 0. | 0. | 0. | 0. |
| 7 | 0. | 0. | 0. | 0. | 0. | 0. |
| 8 | 0. | 0. | 0. | 0. | 0. | 0. |
| 9 | 0. | 0. | 0. | 0. | 0. | 0. |
| 10 | 0. | 0. | 0. | 0. | 0. | 0. |
| 11 | 0. | 0. | 0. | 0. | 0. | 0. |
| 12 | 0. | 0. | 0. | 0. | 0. | 0. |
| 13 | 0. | 0. | 0. | 0. | 0. | 0. |
| 14 | 0. | 0. | 0. | 0. | 0. | 0. |
| 15 | 0. | 0. | 0. | 0. | 0. | 0. |
| 16 | 0. | 0. | 0. | 0. | 0. | 0. |
| 17 | 0. | 0. | 0. | 0. | 0. | 0. |
| 18 | 0. | 0. | 0. | 0. | 0. | 0. |
| 19 | 0. | 0. | 0. | 0. | 0. | 0. |
| 20 | 0. | 0. | 0. | 0. | 0. | 0. |
| 21 | 0. | 0. | 0. | 0. | 0. | 0. |
| 22 | 0. | 0. | 0. | 0. | 0. | 0. |
| 23 | 0. | 0. | 0. | 0. | 0. | 0. |
| 24 | 0. | 0. | 0. | 0. | 0. | 0. |
| 25 | 0. | 0. | 0. | 0. | 0. | 0. |
| 26 | 0. | 0. | 0. | 0. | 0. | 0. |

| | 7 | 8 | 9 | 10 | 11 | 12 |
|---|---|---|---|---|---|---|
| 1 | 0. | 0. | 0. | 0. | 0. | 0. |
| 2 | 0. | 0. | 0. | 0. | 0. | 0. |
| 3 | 0. | 0. | 0. | 0. | 0. | 0. |
| 4 | 0. | 0. | 0. | 0. | 0. | 0. |
| 5 | 0. | 0. | 0. | 0. | 0. | 0. |
| 6 | 0. | 0. | 0. | 0. | 0. | 0. |
| 7 | 2.80e+04 | 0. | -1.40e+04 | -2.27e+05 | 0. | 0. |
| 8 | 0. | 9.85e+06 | 2.27e+05 | 2.46e+06 | 0. | 0. |
| 9 | -1.40e+04 | 2.27e+05 | 2.80e+04 | 0. | -1.40e+04 | -2.27e+05 |
| 10 | -2.27e+05 | 2.46e+06 | 0. | 9.85e+06 | 2.27e+05 | 2.46e+06 |
| 11 | 0. | 0. | -1.40e+04 | 2.27e+05 | 2.80e+04 | 0. |
| 12 | 0. | 0. | -2.27e+05 | 2.46e+06 | 0. | 9.85e+06 |
| 13 | 0. | 0. | 0. | 0. | -1.40e+04 | 2.27e+05 |
| 14 | 0. | 0. | 0. | 0. | -2.27e+05 | 2.46e+06 |
| 15 | 0. | 0. | 0. | 0. | 0. | 0. |
| 16 | 0. | 0. | 0. | 0. | 0. | 0. |
| 17 | 0. | 0. | 0. | 0. | 0. | 0. |
| 18 | 0. | 0. | 0. | 0. | 0. | 0. |
| 19 | 0. | 0. | 0. | 0. | 0. | 0. |
| 20 | 0. | 0. | 0. | 0. | 0. | 0. |
| 21 | 0. | 0. | 0. | 0. | 0. | 0. |
| 22 | 0. | 0. | 0. | 0. | 0. | 0. |
| 23 | 0. | 0. | 0. | 0. | 0. | 0. |
| 24 | 0. | 0. | 0. | 0. | 0. | 0. |
| 25 | 0. | 0. | 0. | 0. | 0. | 0. |
| 26 | 0. | 0. | 0. | 0. | 0. | 0. |

| | 13 | 14 | 15 | 16 | 17 | 18 |
|---|---|---|---|---|---|---|
| 1 | 0. | 0. | 0. | 0. | 0. | 0. |
| 2 | 0. | 0. | 0. | 0. | 0. | 0. |
| 3 | 0. | 0. | 0. | 0. | 0. | 0. |
| 4 | 0. | 0. | 0. | 0. | 0. | 0. |
| 5 | 0. | 0. | 0. | 0. | 0. | 0. |
| 6 | 0. | 0. | 0. | 0. | 0. | 0. |
| 7 | 0. | 0. | 0. | 0. | 0. | 0. |
| 8 | 0. | 0. | 0. | 0. | 0. | 0. |
| 9 | 0. | 0. | 0. | 0. | 0. | 0. |
| 10 | 0. | 0. | 0. | 0. | 0. | 0. |
| 11 | -1.40e+04 | -2.27e+05 | 0. | 0. | 0. | 0. |
| 12 | 2.27e+05 | 2.46e+06 | 0. | 0. | 0. | 0. |
| 13 | 1.40e+04 | 2.27e+05 | 0. | 0. | 0. | 0. |
| 14 | 2.27e+05 | 4.92e+06 | 0. | 0. | 0. | 0. |
| 15 | 0. | 0. | 2.80e+04 | 0. | -1.40e+04 | -2.27e+05 |
| 16 | 0. | 0. | 0. | 9.85e+06 | 2.27e+05 | 2.46e+06 |
| 17 | 0. | 0. | -1.40e+04 | 2.27e+05 | 2.80e+04 | 0. |
| 18 | 0. | 0. | -2.27e+05 | 2.46e+06 | 0. | 9.85e+06 |
| 19 | 0. | 0. | 0. | 0. | -1.40e+04 | 2.27e+05 |
| 20 | 0. | 0. | 0. | 0. | -2.27e+05 | 2.46e+06 |
| 21 | 0. | 0. | 0. | 0. | 0. | 0. |
| 22 | 0. | 0. | 0. | 0. | 0. | 0. |
| 23 | 0. | 0. | 0. | 0. | 0. | 0. |
| 24 | 0. | 0. | 0. | 0. | 0. | 0. |
| 25 | 0. | 0. | 0. | 0. | 0. | 0. |
| 26 | 0. | 0. | 0. | 0. | 0. | 0. |

| | 19 | 20 | 21 | 22 | 23 | 24 |
|---|---|---|---|---|---|---|
| 1 | 0. | 0. | 0. | 0. | 0. | 0. |
| 2 | 0. | 0. | 0. | 0. | 0. | 0. |
| 3 | 0. | 0. | 0. | 0. | 0. | 0. |
| 4 | 0. | 0. | 0. | 0. | 0. | 0. |
| 5 | 0. | 0. | 0. | 0. | 0. | 0. |
| 6 | 0. | 0. | 0. | 0. | 0. | 0. |
| 7 | 0. | 0. | 0. | 0. | 0. | 0. |
| 8 | 0. | 0. | 0. | 0. | 0. | 0. |
| 9 | 0. | 0. | 0. | 0. | 0. | 0. |
| 10 | 0. | 0. | 0. | 0. | 0. | 0. |
| 11 | 0. | 0. | 0. | 0. | 0. | 0. |
| 12 | 0. | 0. | 0. | 0. | 0. | 0. |
| 13 | 0. | 0. | 0. | 0. | 0. | 0. |
| 14 | 0. | 0. | 0. | 0. | 0. | 0. |
| 15 | 0. | 0. | 0. | 0. | 0. | 0. |
| 16 | 0. | 0. | 0. | 0. | 0. | 0. |
| 17 | -1.40e+04 | -2.27e+05 | 0. | 0. | 0. | 0. |
| 18 | 2.27e+05 | 2.46e+06 | 0. | 0. | 0. | 0. |
| 19 | 2.80e+04 | 0. | -1.40e+04 | -2.27e+05 | 0. | 0. |
| 20 | 0. | 9.85e+06 | 2.27e+05 | 2.46e+06 | 0. | 0. |
| 21 | -1.40e+04 | 2.27e+05 | 1.40e+04 | 2.27e+05 | 0. | 0. |
| 22 | -2.27e+05 | 2.46e+06 | 2.27e+05 | 4.92e+06 | 0. | 0. |
| 23 | 0. | 0. | 0. | 0. | 2.46e+06 | -1.23e+06 |
| 24 | 0. | 0. | 0. | 0. | -1.23e+06 | 2.46e+06 |
| 25 | 0. | 0. | 0. | 0. | 0. | -1.23e+06 |
| 26 | 0. | 0. | 0. | 0. | 0. | 0. |

| | 25 | 26 |
|---|---|---|
| 1 | 0. | 0. |
| 2 | 0. | 0. |
| 3 | 0. | 0. |
| 4 | 0. | 0. |
| 5 | 0. | 0. |
| 6 | 0. | 0. |
| 7 | 0. | 0. |
| 8 | 0. | 0. |
| 9 | 0. | 0. |
| 10 | 0. | 0. |
| 11 | 0. | 0. |
| 12 | 0. | 0. |
| 13 | 0. | 0. |
| 14 | 0. | 0. |
| 15 | 0. | 0. |
| 16 | 0. | 0. |
| 17 | 0. | 0. |
| 18 | 0. | 0. |
| 19 | 0. | 0. |
| 20 | 0. | 0. |
| 21 | 0. | 0. |
| 22 | 0. | 0. |
| 23 | 0. | 0. |
| 24 | -1.23e+06 | 0. |
| 25 | 2.46e+06 | -1.23e+06 |
| 26 | -1.23e+06 | 1.23e+06 |

---

the freq (hz) vector ( 26 by 1 )

---

| | 1 |
|---|---|
| 1 | 1.21e+02 |
| 2 | 1.20e+02 |
| 3 | 9.14e+01 |
| 4 | 7.54e+01 |
| 5 | 7.48e+01 |
| 6 | 5.63e+01 |
| 7 | 4.59e+01 |
| 8 | 4.54e+01 |
| 9 | 2.62e+01 |
| 10 | 2.47e+01 |
| 11 | 2.42e+01 |
| 12 | 1.30e+01 |
| 13 | 1.24e+01 |
| 14 | 5.52e+00 |
| 15 | 4.77e+00 |
| 16 | 2.05e+00 |
| 17 | 1.18e+00 |
| 18 | 8.10e-01 |
| 19 | 3.01e-01 |
| 20 | 2.76e-01 |
| 21 | 0. |
| 22 | 0. |
| 23 | 0. |
| 24 | 0. |
| 25 | 0. |
| 26 | 0. |

| 1. Report No. | 2. Government Accession No. | 3. Recipient's Catalog No. |
|---|---|---|
| NASA CR-172394 | | |

| 4. Title and Subtitle | 5. Report Date |
|---|---|
| Linearized Dynamical Model for the NASA/IEEE SCOLE Configuration | September 1984 |
| | 6. Performing Organization Code |
| 7. Author(s) | 8. Performing Organization Report No. |
| A. F. Hotz, E. Collins, and R. E. Skelton | |
| | 10. Work Unit No. |
| 9. Performing Organization Name and Address | |
| School of Aeronautics and Astronautics<br>Purdue University<br>West Lafayette, IN 47907 | 11. Contract or Grant No.<br>NAG-1-468 |
| | 13. Type of Report and Period Covered<br>Contractor report |
| 12. Sponsoring Agency Name and Address | |
| National Aeronautics and Space Administration<br>Washington, DC 20546 | 14. Sponsoring Agency Code<br>506-57-13-03 |

15. Supplementary Notes

NASA-Langley Technical Monitor, Jeffrey P. Williams.
Interim Report.

16. Abstract

The linearized equation of motion for the NASA/IEEE SCOLE configuration are developed. The derivation is based on the method of lagrange and the equations are assembled into matrix second order form.

| 17. Key Words (Suggested by Author(s)) | 18. Distribution Statement |
|---|---|
| Flexible Structures Models<br>multi-body modelling | Unclassified - Unlimited<br>Subject Category 05 |

| 19. Security Classif. (of this report) | 20. Security Classif. (of this page) | 21. No. of Pages | 22. Price |
|---|---|---|---|
| Unclassified | Unclassified | 34 | A03 |

N-305

For sale by the National Technical Information Service, Springfield, Virginia 22161