NASA CR-172,493

NASA Contractor Report 172493

NASA-CR-172493
19850007377

A SCANNING LASER VELOCIMETER FOR
TURBULENCE RESEARCH

F. K. Owen

FOR REFERENCE

NOT TO BE TAKEN FROM THIS ROOM

COMPLERE, INC.
Palo Alto, California

Contract NAS1-17572
September 1984

LIBRARY COPY

JAN 23 1985

LANGLEY RESEARCH CENTER
LIBRARY, NASA
HAMPTON, VIRGINIA

NASA
National Aeronautics and
Space Administration

Langley Research Center
Hampton, Virginia 23665

Summary

The principal objective of the Phase I work was the demonstration of the scanning concept using existing equipment assigned to the Fluid Dynamics Laboratory of the Ames Thermo and Gas Dynamics Division. The key items involved in this proof of concept were the optical assembly, the assessment of seeding requirements and capability and the development of time dependent laser velocimeter data reduction techniques. Although most of the equipment was not optimal, a prototype scanning system was built and successfully tested in both water and air flows. The experience gained during this work will enable us to design and build a self contained, portable, two-component instrument which will be capable of real time measurements in turbulent high speed flows.

Background

In the original, Phase I, proposal new techniques which would enable rapid laser velocimeter scans of turbulent flow fields were described. But, as seed density and velocity data acquisition rates during scans of air flows were largely unknown, emphasis was placed on water tunnel applications where no seeding problems were anticipated. This proved to be the case and measurements were made of attached and stalled airfoil flows in the Ames/Army Aeromechanics Water Tunnel. However, air flow seeding did not present the anticipated degrees of difficulty and successful measurements were obtained in the flow behind a backward facing step in the Pilot Facility of the Fluid Mechanics Laboratory.

As the principal aim was the eventual application to high speed air flows this success, together with the cooperation of the Army staff and the continued availability of their water tunnel, has removed the need for the

proposed vertical drop facility. However, in earlier work the honeycomb, screen and contraction design details were finalized and are included in this Phase I final report.

Although available hardware only enabled a single velocity component prototype to be built during Phase I, experience gained now permits us to pursue the optimal design and fabrication of a two-component instrument with the scan range and speed for turbulence structure measurements in high speed air flows.

The cooperation of the Experimental Fluid Dynamics Branch and the Ames/Army Aeromechanics Laboratory and particularly the help and encouragement of H. L. Seegmiller, K. McAlister and G. L. Lee is gratefully acknowledged.

Introduction

For some time now, determined efforts have been made to develop methods of predicting complex flow behavior using numerical techniques. However, the current rate of development of computational fluid dynamics, especially for compressible flow fields, is no longer dependent on computer size or numerical techniques. Further progress is restricted by the need for reliable test cases and an improved understanding of both the physics and structure of turbulence in complex flows. These are required to correctly model the turbulent correlations which result from time-averaging the Navier-Stokes equations.

In 1970, Deardorff (Ref. 1) pioneered a promising technique for computing turbulent flows called large eddy simulation (LES), in which the large-scale eddies are computed directly, and the small-scale eddies are modeled. Deardorff was not able to continue his simulation to the near-wall region,

and the lack of complete experimental boundary conditions forced him to make assumptions about the flow which were not verified by later experiment. Accordingly, then, further experimentally determined details of turbulence boundary conditions would be extremely useful. In addition, time-variant experimental results are needed as comparison data for the solutions generated by LES. For example, the ability of LES to generate instantaneous velocity fields cannot be checked by experimental observations in which time averaged measurements are made at limited numbers of fixed locations. Real time velocity scans which essentially freeze the flow are required for comparison.

Additionally, the assessment of new methods for passively, actively or interactively controlling turbulent flows will require the qualitative recognition of the large-scale coherent structures which appear in natural turbulent flows and the mechanisms by which they are modified by changes in boundary conditions. Previous visual observations have shown that two-dimensional large-scale waves exist in turbulent shear flows and that artificial waves of long wave length can be amplified as they are convected downstream. Unfortunately quantitative measurement of amplification rates are unavailable since this requires real time velocity measurement scans.

One of the more frequently used experimental methods of scrutinizing the structure of the turbulent boundary layer has been the measurement of the instantaneous streamwise velocity profile. This work has primarily involved arrays of hot-wire or film probes. The measurement of secondary velocity components and shear stresses in complex flows with hot wires is a much more difficult task. Apart from probe interference, hot-wire data interpretation is often questionable (Ref. 2). In flows of practical interest which often involve extreme turbulence, separation or time-dependent flow reversals, hot-

wire and film measurements are subject to large and unknown errors (Ref. 3). Although more costly, laborious and tedious to operate, the laser velocimeter probably represents the instrument of last resort for the nonintrusive, linear measurement of complex turbulent flows.

Although the laser doppler velocimeter has now become a powerful and proven diagnostic instrument and nonintrusive measurements of local velocities and turbulence have been accomplished in a wide variety of attached and separated flows, measurements have been of a mean, statistical nature derived from averages accumulated independently at various positions in the flow. While providing much useful information they do not give a picture of the dynamic, instantaneous structure of the flow. For example, a mean turbulent velocity profile obtained from ensemble averages can be represented by the solid line shown in Figure 1-A. The envelope of the variations of the instantaneous velocity being represented by the horizontal bars. At any given instant, therefore, the actual velocity profile, which includes the mean motion plus the superimposed turbulent structure, might look like one of the dashed lines shown in Figure 1-B which represent profiles at two different times t_1 and t_2. Obviously, a mean profile obtained from point-averaged measurements is an incomplete representation of the phenomena and may conceal many aspects of the flow. This realization has led to the development of conditional sampling techniques which attempt to recognize and record specific events or structures within the flow. However, simultaneous multipoint measurements are still required to freeze the flow and to obtain the spatial correlations necessary to identify turbulent scales and structures.

The objectives of this work are to address the need for experimental data to enhance the knowledge of turbulent structure in support of turbulence

modelling programs as called for in subtopic 04.03 - Experimental Fluid Dynamics. Specifically, the aim of the research is to develop a new instrument that will permit nonintrusive measurements of the dynamics of large-scale turbulent structures in boundary and shear layers.

Test Facilities and Configurations

During Phase 1 a single velocity component scanning laser velocimeter was designed, built and tested in both air and water flows. The air flow study was conducted at a freestream velocity of 40 m/s in the flow behind a rearward facing step in the Pilot Facility of the Fluid Dynamics Laboratory of the Thermo and Gas Dynamics Division at NASA Ames. The water tunnel study was conducted in the wake of a 4-inch chord Boeing Vertol VR-7 airfoil at zero and 15 degrees angle of attack at a freestream velocity of 1 m/s. These flows were representative of attached and stalled suction surface flow. The facility used was the Ames/Army Aeromechanics Laboratory water tunnel.

The Optical System

A schematic of the scanning laser velocimeter optical system is shown in Figure 2. The optical units consist of an Argon-Ion laser light source from which a single 5145 angstrom wavelength beam is separted by means of a prism and then steered onto the optical table. Here, a beam splitting module and Bragg cell generate a pair of parallel, frequency offset beams which are then focused down to intersect in the center of the wind tunnel. A six face rotating mirror which was driven by an air turbine, was mounted between the focusing lens and the tunnel as shown in the sketch. This enabled the focal volume to be swept vertically across the tunnel. Input beam orientation was such that the streamwise velocity component was measured during each sweep. In addition,

conventional time averaged measurements could be made by moving the mirror to a series of fixed positions which located the beams at various fixed points in the flowfield. For this rotating mirror assembly the maximum allowable scan frequency is determined by the number of fringes which are required to detect and validate a Doppler burst. As the scan velocity increases, the particle residence time within the focal volume decreases and so fewer doppler cycles are obtained. Thus, fast scanning requires frequency shifting to ensure particle detection at all velocities which are likely to be encountered in the flow. In the present experiment, Bragg cell frequency shifting of 40 mHz was sufficient to achieve this. Currently scan velocities are limited by data acquisition rates which will be discussed later.

The forward scatter receiving optics were mounted on the opposite side of the test section and the scattered light was focused through a vertical slit onto a photomultiplier tube as shown in Figure 2. The slit was aligned before each test to cover the entire scan range. The receiving optics could then view any seed particle which was illuminated by the focal volume at any location in the scan. The off-axis optical magnification was such that the image movement on the slit was one-half that of the beam scan. The problem of field curvature, a consequence of light beam deflection by mechanical means has also been addressed. A nominally flat field condition was achieved for beam rotations of up to five degrees which was sufficient for both the step and airfoil wake flows where scan ranges of up to 5 cm were required.

Seeding

Two of the largest sources of uncertainty at the start of the test program were the seed density requirements and particle generation capability.

During conventional laser velocimeter testing, measurements are generally taken over several seconds or even minutes at a single point in the flow. However, scanning systems require data rates which are sufficient to determine complete profiles during each scan, which requires dense, uniform seeding.

In the water tunnel, freestream velocities are low so that scanning frequency requirements are relaxed and seeding problems are removed since continuous wave LV signals can be conveniently achieved using impurities. In air, however, natural aerosols cannot be relied upon for the light scattering requirements and artificial aerosols of known size distribution must be added. However, past experience has shown that significant improvements in data rate can be achieved even in large scale, high speed wind tunnels with the introduction of aerosols generated with a single atomizer (Ref. 4). Thus, to achieve high seed density during the present pilot tunnel experiment, the flow was seeded with an array of atomisers, mounted ahead of the settling chamber. These atomizers generated 0.4 micron-diameter polystyrene spheres which were introduced into the flow ahead of the test section. Seed particle concentrations were sufficient to achieve velocity data acquisition rates in excess of 100,000/sec. However, in the scanning mode, computer limitations reduced the maximum data rate to 25,000/sec. This, combined with mirror geometry limitations and data rate requirements per scan, limited the maximum scan repetition rate to 125 scans per second. Individual scan resolution time in the airflow was approximately 1.5 cm, i.e., approximately equal to the step height. However, in the water flow resolution of better than 2 percent chord was possible. Current scan limitations, rates and speed will be discussed subsequently.

Data Acquisition

In addition to computer software, the data acquisition system consisted primarily of three elements: a signal processor, an event synchronizer and a desk top computer. These elements are shown schematically in Fig. 3. During conventional operation the processor output contains the information required to calculate the instantaneous streamwise velocity u. From these determinations, the average velocity $\bar{u}$ and RMS turbulence level u' are calculated. Plots of these parameters are displayed on line as profiles are measured and hard copy is available as required. All the raw and reduced data are stored on flexible discs for permanent storage and retrieval. Real time histograms and probability densities can also be displayed during data acquisition.

During scanning operation, the receiving optics will view a seed particle as it is illuminated by the focal volume at any location in the scan. Thus the exact position of the measurement volume is required each time a valid particle velocity signal is detected. To achieve this, a system, which used a once per scan pulse was developed. A schematic of this measurement procedure is shown in Fig. 4. In the system a pulse was generated each time one of the laser beams hit a photodetector which was positioned to intersect the beam before each scan. Each pulse reset the multiplexer clock so that, for a given mirror and spin rate, the clock pulse number represents the instantaneous focal volume location in the flowfield. Any variation in mirror spin rate can be accounted for by normalizing the clock pulse number by the time between successive reset pulses. Now, as particle arrival times are random the clock pulse number can be used to assign each velocity measurement to its correct scan position. The velocity component (u) and clock pulse number are then recorded on flexible disc for analysis. A program written for HP 9845 desk-top

computer performs this analysis and calculates the instantaneous velocity component and scan position at the time of the event. From these determinations, individual scan profiles and ensemble averages over multiple scans can be generated. Position uncertainties due to focal volume movement during velocity validation, i.e., the time for a particle to cross 16 fringes, is negligible as Bragg cell frequency shifting was employed.

Results

Proof of concept of the scanning optical system and data reduction procedures requires the comparison of scanning and pointwise measurements. This was be done by calculating the mean velocity and RMS velocity fluctuation profiles from ensemble averages obtained from one thousand successive scans. Such a comparison, obtained behind the backward facing step, is shown in Figure 5. It can be seen that there is excellent agreement between the conventional time averaged and scan averaged mean and turbulent velocity profiles which confirms the experimental procedures.

Now consider the sequence of events during the establishment of backward facing step flow. Initially the detached shear layer will expand like a free jet until it reattaches to the wall well downstream of the step. However, unlike a free expansion, there is a limited supply of "stagnant" air to provide free shear-layer entrainment and a drop in pressure must occur behind the step. This results in upstream movement of the time-averaged attachment point to a position closer to the step where the shear layer splits; the upstream flow providing fluid for the free shear layer entrainment from the corner recirculation zone. Thus, the mean attachment location reflects the balance between the time-averaged entrainment and upstream deflection rates so that instantaneous attachment point movement reflects the imbalance between

the local instantaneous entrainment and upstream deflection rates. Since the instantaneous entrainment rate is related to the turbulence scales in the free shear-layer, one would expect random movements of the instantaneous attachment point due to local imbalances between the entrainment from, and supply to, the corner recirculation zone. These large-scale, unsteady reversing flows will result in high rms velocity fluctuations.

Quantitative insight into this large-scale turbulent (unsteady) nature of the recirculation zone may be obtained from laser velocimeter probability density distributions such as those shown in Fig. 5. These measurements, which can only be obtained with zero velocity frequency offset, show the unsteadiness of the flow field in the initial mixing region. Within the time-averaged recirculation zone below the step there are significant numbers of positive velocity occurrences which are the result of bubble movement upstream. Conversely, at the step height location there are significant negative velocity occurances and the velocity probability density function is distinctly bi-modal. This is the result of fluctuations in the vertical location of the free shear layer caused by streamwise variations of the attachment point.

Although these conventional and scan averaged measurements show single point velocity variations and directional intermittency, they cannot give any insight into the true time dependent structure of the flow. This can only be achieved by inspection of individual scan profiles. Two examples of rapid scans through the flow in the region of the time averaged attachment line are shown in Fig. 6. The scans show both separated and attached profiles which could be inferred from the time averaged velocity probability density distributions. However, comparison of the two profiles shows significant differences between the local flow velocity gradients which suggests time

dependent differences in the turbulence kinetic energy and turbulent shear stress production rates.

The water tunnel measurements are shown in Figs. 7 and 8. At zero airfoil angle of attack (Fig. 7), the scan and time averaged profiles are once again in excellent agreement and show a symmetric wake. However, hydrogen bubble flow visualization showed slight wake location fluctuations possibly caused by freestream turbulence which would produce time dependent variations in actual model angle of attack. These variations which cannot be detected by conventional means were measured during successive scans. A sequence which shows instantaneous downward wake displacement is shown in Fig. 7.

In the stalled suction surface case (Fig. 8), the scan and time averaged profiles both show a thick retarded upper layer with a significant region of reversed flow and a thin lower surface boundary layer. However, once again significant flow features are hidden by these results. Flow visualization showed extensive upper surface flow separation movement and extent as the bubble size fluctuated. The successive scans shown in Fig. 8 show the quantitative flow features during a single bubble collapse. Clearly there are significant changes in bubble size, reverse flow velocity and local velocity gradient as the upper surface flow features change with time. Conventional measurements only show large rms levels whereas the successive scans show the mechanisms involved. Again significant time dependent kinetic energy and shear stress variations are indicated.

Discussion

The scanning measurements clearly show that there are significant unsteady flow features which influence the time averaged flowfield that are hidden by

conventional laser velocimeter measurements. This is probably true in most if not all flowfields of practical interest.

An assessment of the influence of these large scale, unsteady flowfield variations can be made by expressing the instantaneous point velocity as

$$u = \bar{u} + u' + \tilde{u}$$

where $\bar{u}$ is the conventional mean, u' is the small scale random fluctuation and $\tilde{u}$ is the unsteady contribution to the total velocity field. This latter term will vary in both amplitude and phase depending on the boundary conditions of each particular flow. With a similar expression for the vertical velocity and substitution in the momentum equation we see that

$$\bar{u}\frac{\partial \bar{u}}{\partial x} + \bar{v}\frac{\partial \bar{u}}{\partial y} = -\frac{1}{\rho}\frac{\partial \bar{p}}{\partial x} + \nu\frac{\partial^2 \bar{u}}{\partial y^2} - \frac{1}{\rho}\frac{\partial}{\partial y}\left(\overline{u'v'} + \overline{\tilde{u}\tilde{v}}\right)$$

when we assume that the small scale and unsteady fluctuations are uncorrelated, i.e., $\overline{u'\tilde{u}}$ etc. = 0.

Now a major assumption in many current calculation schemes is that the Reynolds shear stress distribution, $\overline{u'v'}$ is related to the local mean velocity gradients. We can see that this assumption is only valid if $\overline{u'v'}$ is unaffected by large scale unsteadiness and if $\overline{u'v'} \gg \overline{\tilde{u}\tilde{v}}$. The need for higher order closure models may well be caused by these assumptions not being met.
A first attempt to determine the validity of these assumptions has been made by measuring the Reynolds shear stresses in the near wake of an oscillating airfoil (Ref. 3) where large, known perturbations to angle of attack around the static stall angle were introduced. The results indicate mixing lengths up to five times greater than those observed in "steady" stall cases.

The scanning laser velocimeter should prove to be an invaluable tool in future studies of the large scale characteristics of turbulent flow. Since,

once we understand the mechanisms involved we stand a far better chance to model, manipulate or even control turbulent flows of economic importance.

Current Status and Capabilities

A single velocity component, frequency offset scanning laser velocimeter has been designed, built and demonstrated in both water and air flows. In water flows, where freestream velocities are low and seeding problems are removed, scan frequencies can be used which freeze the flow and provide flowfield details in both space and real time. In air, the velocities are generally much higher so that scan rate requirements are much more stringent. However, in the work to date we have shown that seed density requirements can be met although present data handling capability precludes scan rates which would be sufficient to freeze the flow. In the phase I study, computer speed limited time dependent data acquisition rates to 25K/sec., and the six-sided rotating mirror reduced the effective scan time by a factor of twenty. Thus, practical data rates were limited to 1250/sec. Since a minimum of ten data points was required to determine each profile, the maximum scan rate was 125/sec. This repetition rate was insufficient to obtain real time information from successive scans in air flows. But, since each effective scan time was less than 0.5msec, the 40m/sec air flow was frozen to about one step height (approx. 1.5 cm) during each scan.

The results suggest several areas where significant improvements could be made to enable two component real time scans in high speed air flows. These details are presented in our Phase II proposal.

REFERENCES

1. Deardorff, J. W., "A Numerical Study of Three-Dimensional Turbulent Channel Flow at Large Reynolds Numbers," JFM, Vol. 41, 1970, p. 453.

2. Fernholz, H. H. and Finley, P. J., "A Further Compilation of Compressible Boundary Layer Data with a Survey of Turbulence Data," AGARD-AG-263, No. 1981.

3. Owen, F. K., "An Assessment of Flow-Field Simulation and Measurement," AIAA Fluid and Plasma Dynamics Conference, July 1983.

4. Owen, F. K., "Application of Laser Velocimetry to Unsteady Flows in Large-Scale, High-Speed Tunnels." Tenth International Congress on Instrumentation in Aerospace Simulation Facilities, September 1983.

Appendix

LOW TURBULENCE TUNNEL INLET DESIGN

The inlet was designed for a low-turbulence, axisymmetric wind tunnel with a 10 inch diameter working section. It consists of an extended inlet bellmouth to ensure uniform flow conditions at the honeycomb entry. The honeycomb is followed by four screens (with two different open-area ratios) and a 9 : 1 contraction with cubic wall shape.

Discussion of Individual Component Design

The design or choice of all the components is based on design rules from theory and past experience.

1. Inlet Bellmouth

A 5 inch diameter semi-circular shape is adequate with a 2-1/2 inch straight section ahead of the honeycomb. This inlet is essential to present a uni-directional or straight flow to the honeycomb. Inclined flow is detrimental to honeycomb performance since the flow stalls in the cells, and the pressure loss is also increased.

2. Honeycomb

Honeycombs are effective for removing swirl and lateral mean velocity variations. An incidental effect of honeycombs is to reduce the turbulence level in the flow. Essentially, the lateral components of turbulence, like those of mean velocity, are inhibited by the honeycomb cells and almost complete removal is achieved in a length equivalent to about 5-10 cell diameters. Honeycombs also shed turbulence, the strength of which is proportional to the shear layer thickness in the cells. So the cell length should be kept fairly short. The cell size should be smaller than the smallest lateral wavelength of the velocity variation. Recommended values selected for the Inlet are: Cell size = 1/8", length 1 inch.

3. Screens

Screens improve the spatial and temporal uniformity of the flow. Screens with low β (open-area ratio) produce instabilities resulting from a random calition of jets. So the minimum value of β recommended is 0.57. Screens have also been found to affect the scale of the turbulence. For turbulence scale reduction, it is better to reduce the mesh size gradually through a screen combination. The scren spacing is dictated by two properties:

(i) full recovery from the static pressure perturbation.

(ii) full recovery from turbulence scale reduction.

Condition (i) is found to be satisfied experimentally for spacing of 1" or more. Condition (ii) is basically that the spacing should be of the order of the large energy containing eddies. Since the screens are preceded by a fine honeycomb, this condition should also be satisfied for a 1" spacing.

Screen Selection

First two screens: $\beta = 0.63$ ($\sim$ 20 meshes, wire dia. $\approx$ .0103")

Second two screens: $\beta = 0\text{-}.58$ ($\sim$ 40 meshes, wire dia. $\approx$ .006")

4. Contraction

A contraction increases the mean velocity and reduces both mean and fluctuating velocity variations to a smaller fraction of the average velocity. For this reason, large conraction ratios are attractive. However, a contraction with a very large area ratio and a reasonable length would have large wall angles and consequently large curvature near the end which could result in separation. For small tunnels, contraction ratios of between six and nine are found to be adequate. In fact, high contraction ratios have been found to produce increases in exit plane turbulence. Studies of a variety of

contraction wall shapes for axisymmetric cross-sections have found that nozzles designed with the cubic equation ($R = a_o + a_1x + a_2x^2 + a_3x^3$) have the smallest boundary layer thickness and lowest turbulence intensities at the exit plane.

Design Selected

Cubic Wall Shape ($y = 15 - .052083x^2 + .001447x^3$)

Contraction Ratio - 9

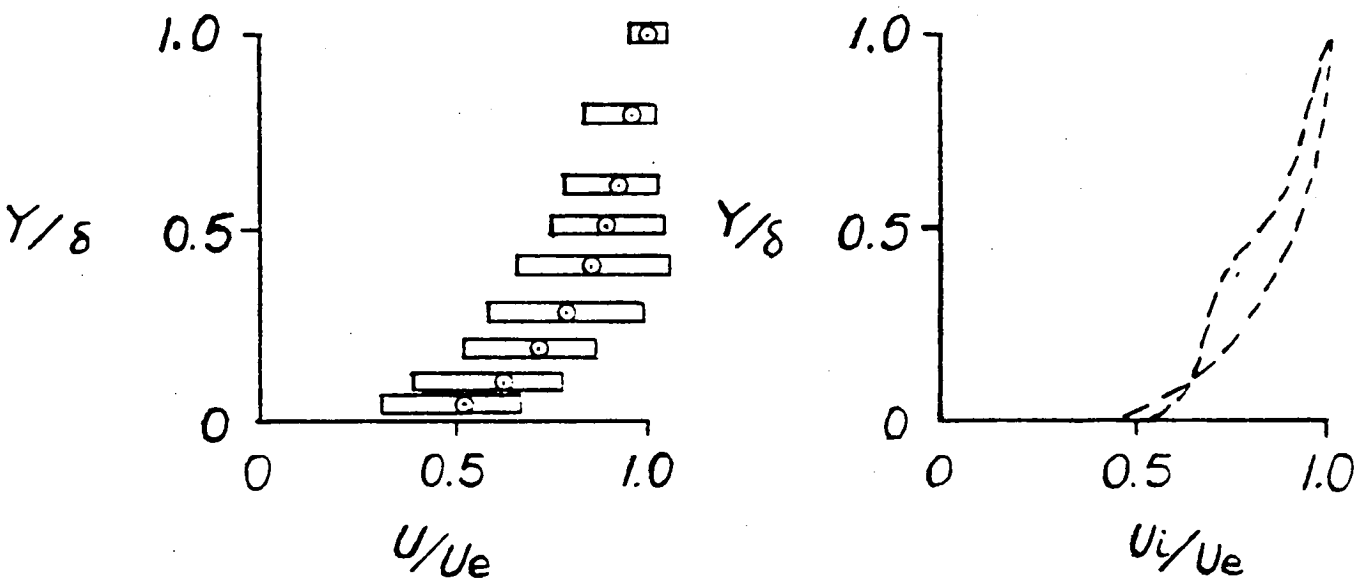

Fig. 1 Conventional and Instantaneous Turbulent Boundary Layer Velocity Profiles. Reproduced from Phase I Proposal.

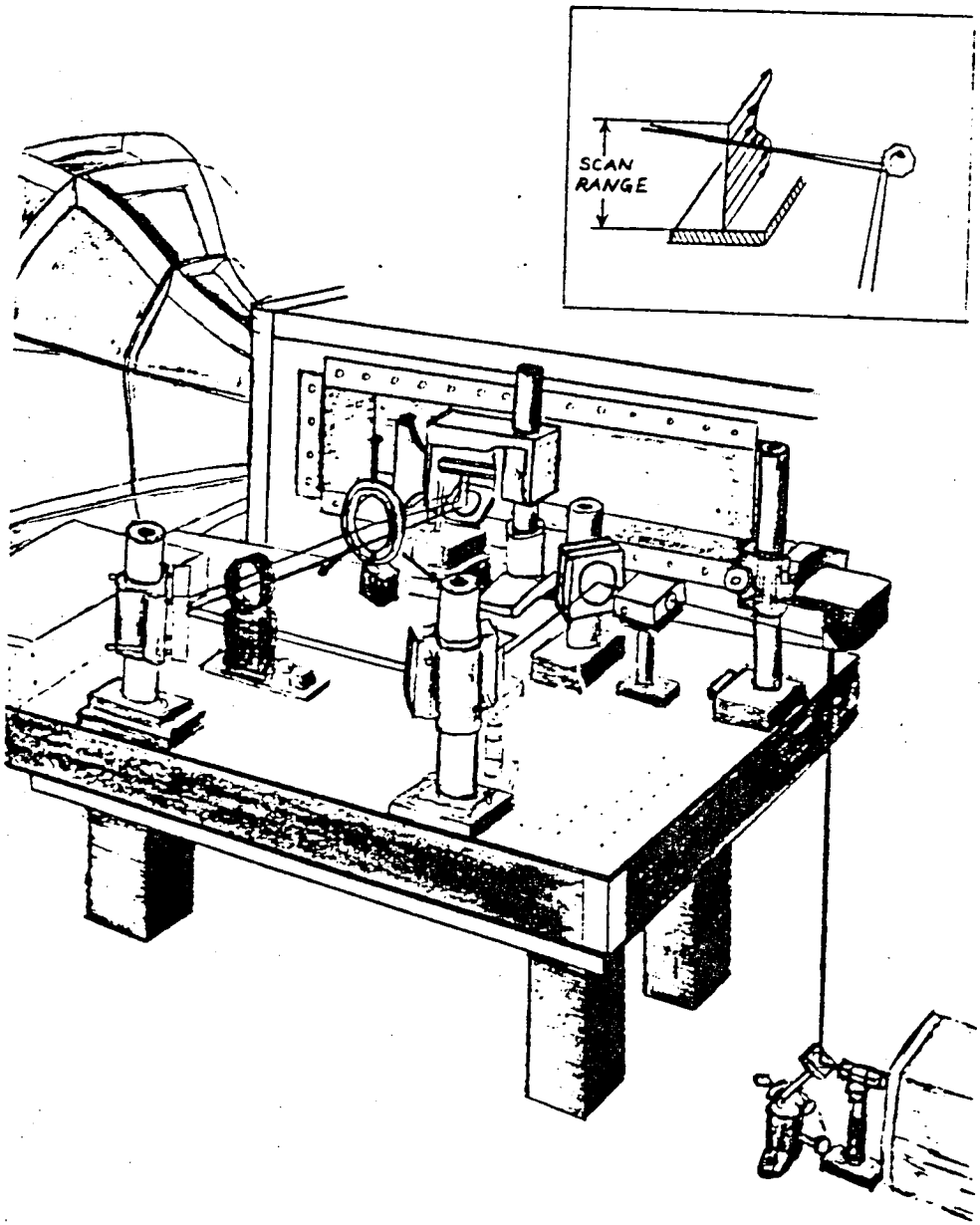

Fig. 2a Scanning Laser Velocimeter Sending Optics.

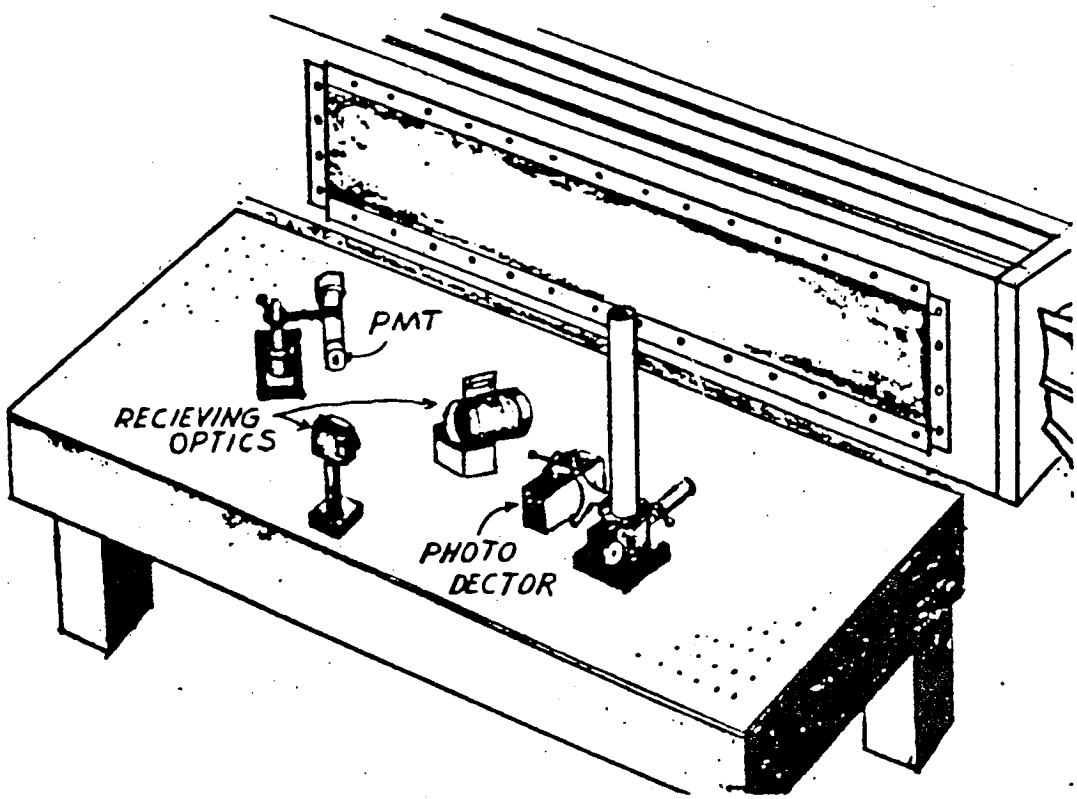

Fig. 2b Scanning Laser Velocimeter Receiving Optics

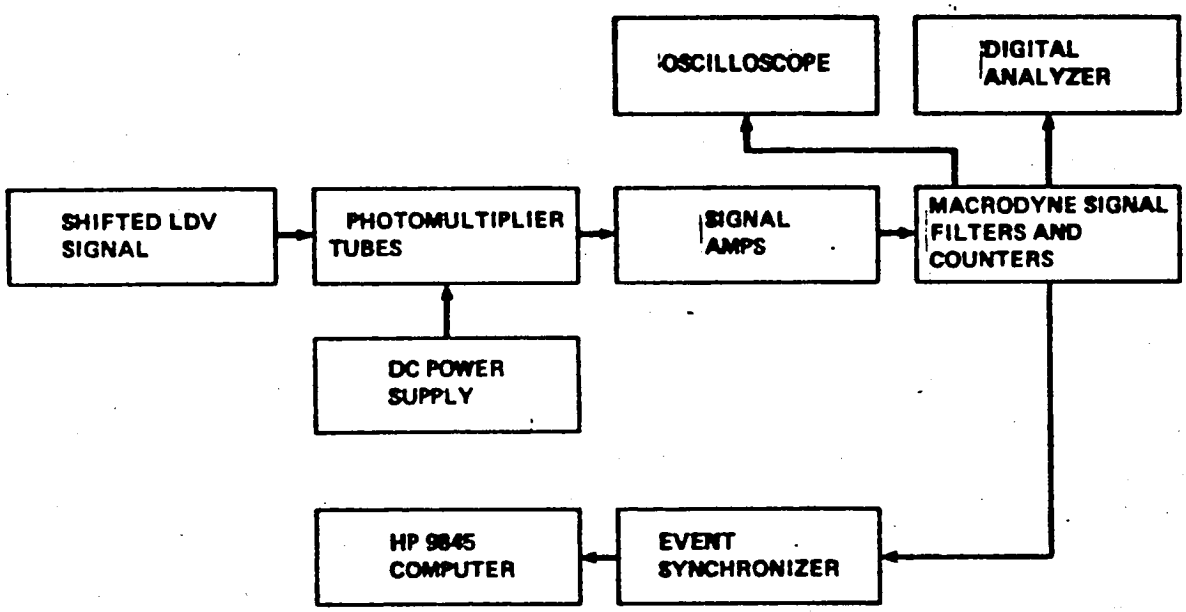

Fig. 3 Data Acquisition System.

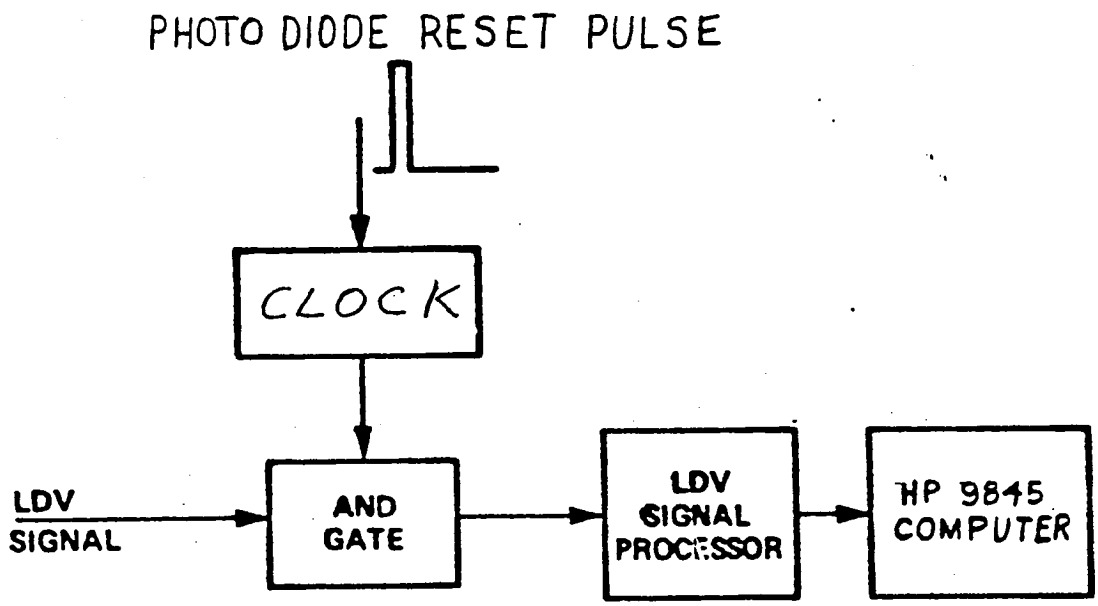

Fig. 4 Scanning Laser Velocimeter Sampling System.

Fig. 5 STEP FLOW, TIME AND SCAN AVERAGED COMPARISONS

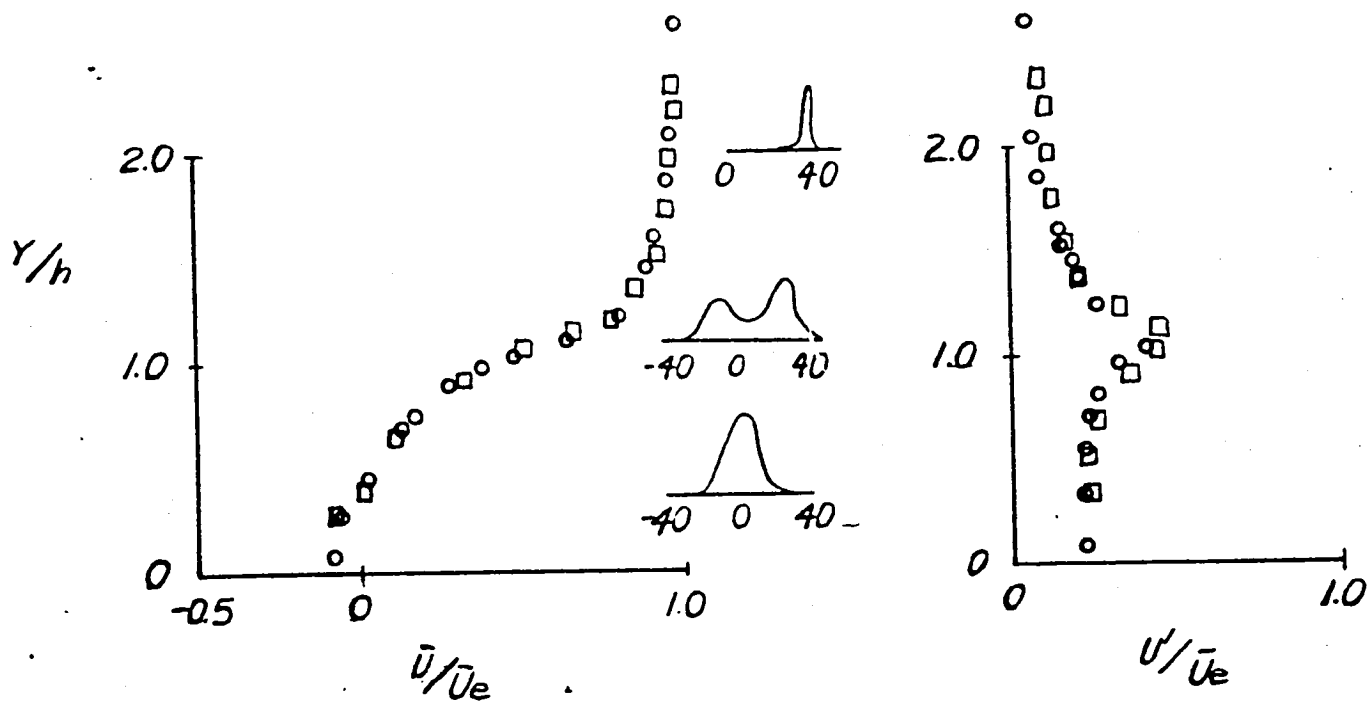

Square symbols denote scan averages over predefined data windows and various scan frequencies between 60 and 125 per second.

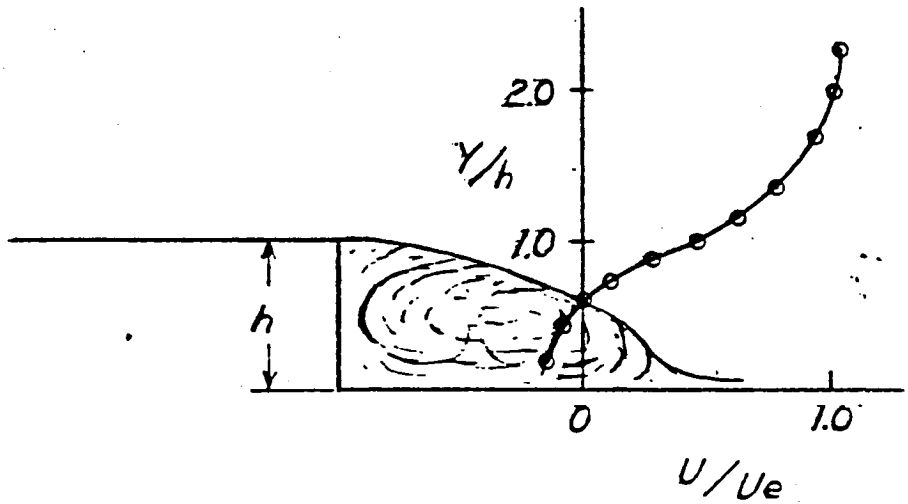

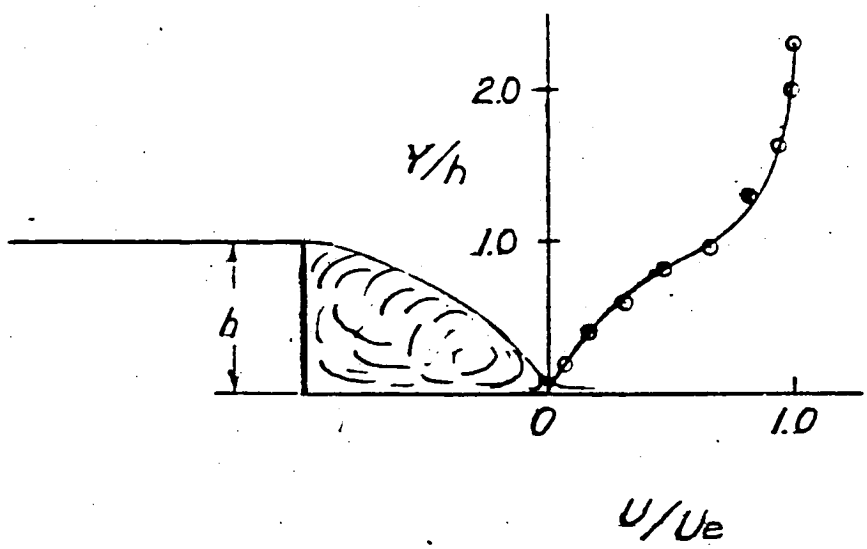

Fig. 6 Laser Velocimeter Scans in the Attachment Region.

Scan rate of 125/sec, individual scan time 0.4 m.sec. The 40 meter a second freestream flow moved one step height during each scan.

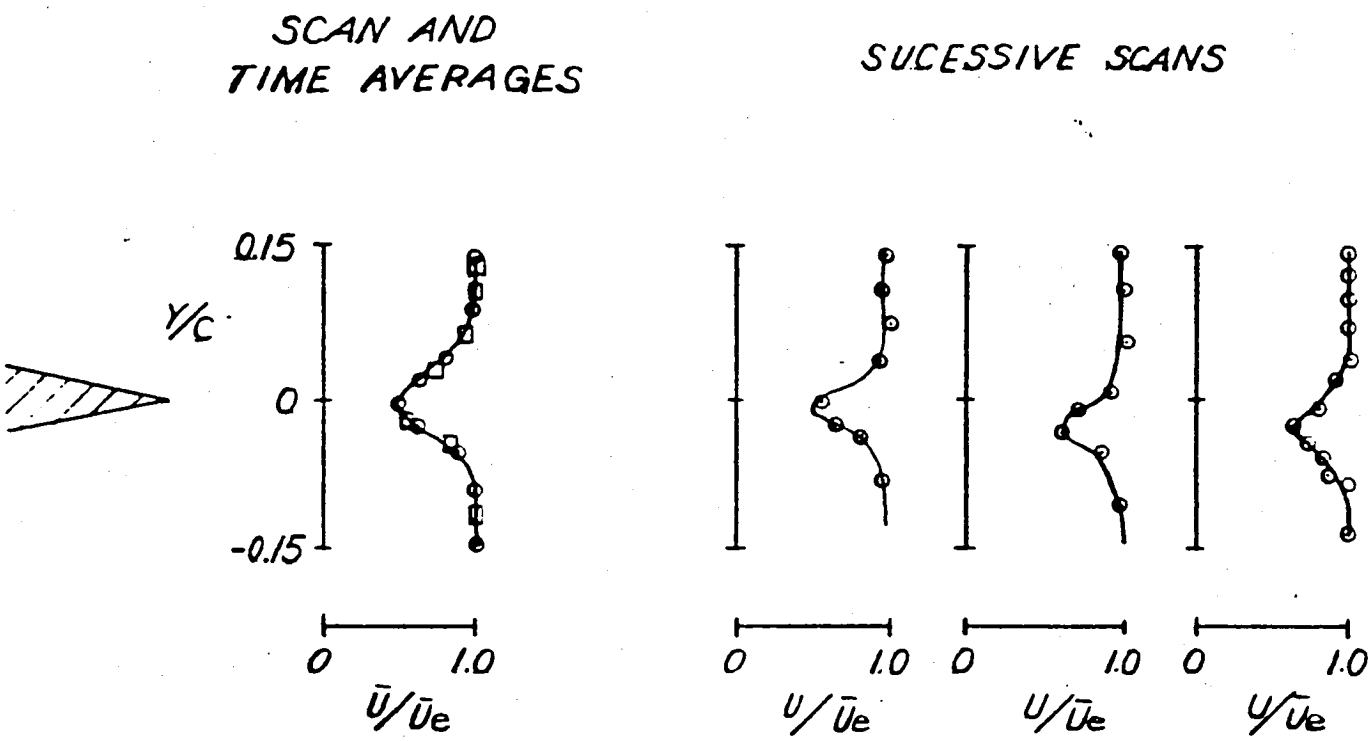

Fig. 7 Scan and Time Average Comparison and Successive Scans Showing the Time-Dependent Movement of the Wake.

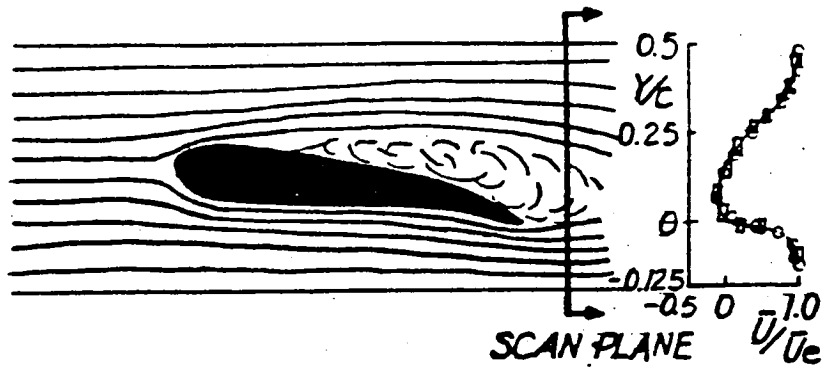

Fig. 8a Scan and Time Average Comparison of the Flow on a Stalled Airfoil.

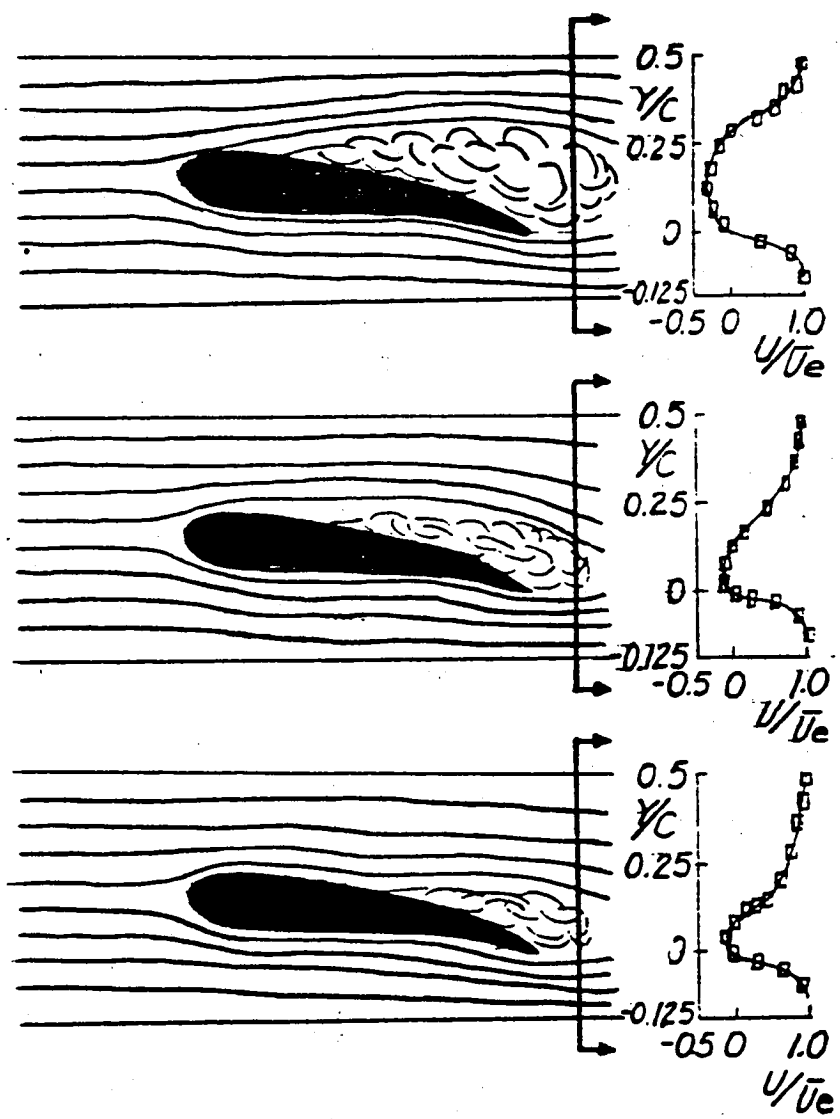

Fig. 8b Successive Scans of the Flow on a Stalled Airfoil Showing Bubble Movement and Collapse.

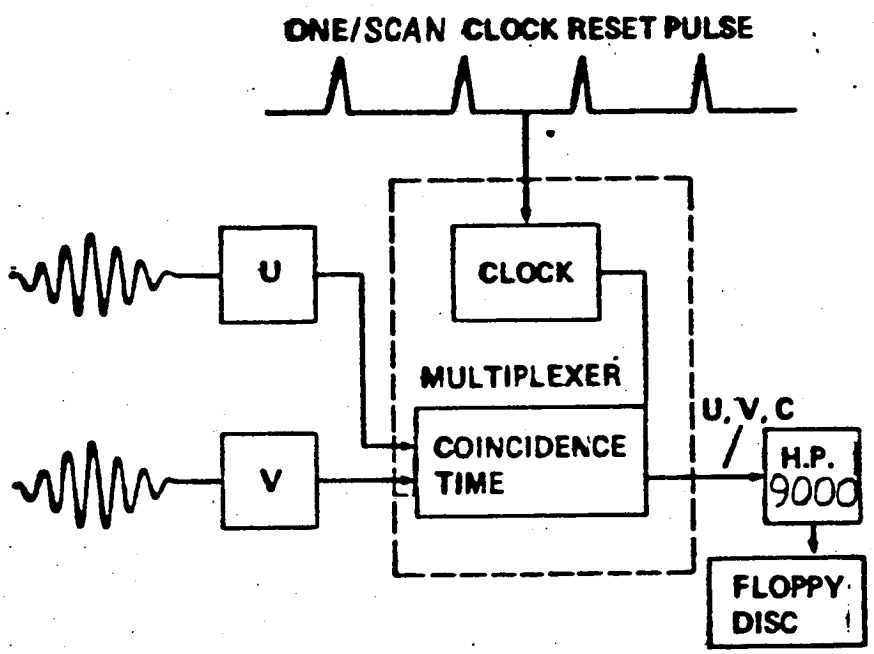

Fig. 9 Schematic of the Proposed Two-Component Scanning Laser Data Acquisition System.

1. Report No.	2. Government Accession No.	3. Recipient's Catalog No.
NASA CR-172493		

4. Title and Subtitle	5. Report Date
A SCANNING LASER VELOCIMETER FOR TURBULENCE RESEARCH	September 1984
	6. Performing Organization Code
7. Author(s)	8. Performing Organization Report No.
F. K. Owen	
	10. Work Unit No.
9. Performing Organization Name and Address	
Complere Inc., P.O. Box 1697, Palo Alto, CA 94302.	11. Contract or Grant No. NAS1-17572
	13. Type of Report and Period Covered Contractor Report
12. Sponsoring Agency Name and Address	
National Aeronautics and Space Administration, Washington, D.C. 20546.	14. Sponsoring Agency Code 324-01-00-01

15. Supplementary Notes

Point of Contact: Technical Monitor, Dr. R. W. Barnwell, Langley Research Center, Hampton, VA 23665. (804) 865-2601 or FTS 928-2601

16. Abstract

Turbulent and unsteady separated flows occur on most practical flight vehicles but are not yet sufficiently understood for designs to provide safe margins of performance without recourse to extensive experiment and computation. To date, reliable experimental data for even basic flows is severely limited and does not yet provide a satisfactory data base with which to assess current design and calculation methods. Although the laser velocimeter (LV) has become a proven, nonintrusive instrument for the measurement of local mean velocities and turbulence properties, measurements have been of a mean, statistical nature derived from averages accumulated independently at different positions in the flow. Thus, the measurements do not give an instantaneous dynamic, picture of the flow-field structures. Accordingly, a new technique for rapid LV scans of turbulent flow fields was proposed. This novel modification to current velocimeter optics and software was aimed at providing spatial and temporal resolution of turbulent structures. The potential of this new instrument for fundamental fluid mechanical measurements of turbulent flows has been demonstrated. The results clearly show that significant unsteady flow features are hidden by conventional measurements and that the scanning laser velocimeter should prove an invaluable tool in future studies of the structure of turbulent flows.

17. Key Words (Suggested by Author(s))	18. Distribution Statement
Laser Velocimeter Scans Unsteady Flows	Unclassified - Unlimited Subject Category 02

19. Security Classif. (of this report)	20. Security Classif. (of this page)	21. No. of Pages	22. Price*
Unclassified	Unclassified	28	A03

*For sale by the National Technical Information Service, Springfield, Virginia 22161

3 1176 00033 8120