General Disclaimer

One or more of the Following Statements may affect this Document

- This document has been reproduced from the best copy furnished by the organizational source. It is being released in the interest of making available as much information as possible.

- This document may contain data, which exceeds the sheet parameters. It was furnished in this condition by the organizational source and is the best copy available.

- This document may contain tone-on-tone or color graphs, charts and/or pictures, which have been reproduced in black and white.

- This document is paginated as submitted by the original source.

- Portions of this document are not fully legible due to the historical nature of some of the material. However, it is the best reproduction available from the original submission.

Produced by the NASA Center for Aerospace Information (CASI)

(NASA-CR-175573) ADVANCED STRESS ANALYSIS METHODS APPLICABLE TO TURBINE ENGINE STRUCTURES Final Report (Massachusetts Inst. of Tech.) 44 p HC A03/MF A01 CSCL 21E
N85-21165
Unclas
G3/07 14552

APR 1985
RECEIVED
NASA STI FACILITY
ACCESS DEPT.

DEPARTMENT OF
AERONAUTICS AND ASTRONAUTICS
MASSACHUSETTS INSTITUTE OF TECHNOLOGY
CAMBRIDGE, MASSACHUSETTS 02139

ADVANCED STRESS ANALYSIS METHODS APPLICABLE TO TURBINE ENGINE STRUCTURES

by

Theodore H.H. Pian

Final Report of Research Grant NAG-3-33

Submitted to:

NASA Lewis Research Center

Department of Aeronautics and Astronautics
Massachusetts Institute of Technology
Cambridge, Massachusetts 02139

March 1985

ACKNOWLEDGEMENT

The completion of this research program is due to the cooperative efforts of the following members of the research team:

Professor Da-Peng Chen

Professor Zong-shu Tian

Mr. Kurosh Kafie

Mr. David J. Kang

Dr. Kiyohide Sumihara

Some of the results obtained are from term projects by the following graduate students:

Mr. Ming-Sang Li

Mr. Richard Shapiro

Mr. Marthinas C. VanShoor

Mr. Guillermo G. Webber

Mr. Cheng Wang

The technical monitors for this research program are Drs. Laszlo Berke and Christos C. Chamis. The author gratefully acknowledge the encouragement received from Dr. Berke in the pursuing of new ideas in hybrid finite elements based on mixed variational principles in structural mechanics.

ABSTRACT

In this final report the following tasks on the study of advanced stress analysis methods applicable to turbine engine structures are described:

(1) Constructions of special elements which containing traction-free circular boundaries.

(2) Formulation of new version of mixed variational principle and new version of hybrid stress elements.

(3) Establishment of method for suppression of kinematic deformation modes.

(4) Construction of semiLoof plate and shell elements by assumed stress hybrid method.

(5) Elastic-plastic analysis by viscoplasticity theory using the mechanical subelement model.

TABLE OF CONTENT

	Page
1. INTRODUCTION	1
2. CONSTRUCTION OF SPECIAL ELEMENTS CONTAINING TRACTION-FREE CIRCULAR BOUNDARIES	4
3. FORMULATION OF NEW VERSIONS OF MIXED VARIATIONAL PRINCIPLE AND NEW VERSION OF HYBRID STRESS ELEMENTS	5
4. ESTABLISHMENT OF METHOD FOR SUPPRESSION OF KINEMATIC DEFORMATION MODES [6]	11
5. CONSTRUCTION OF SEMILOOF ELEMENTS AND SHELLS ELEMENTS BY ASSUMED STRESS HYBRID METHOD	12
6. ELASTIC-PLASTIC ANALYSIS BY VISCOPLASTICITY THEORY USING THE MECHANICAL SUBELEMENT MODEL	14
7. SUMMARY OF ACCOMPLISHMENTS OF THE PRESENT RESEARCH PROGRAM	16
APPENDIX: EIGHT-NODE SOLID ELEMENT WITH A TRACTION-FREE CIRCULAR SURFACE	18
REFERENCES	28
TABLES	31
FIGURES	35

1. INTRODUCTION

In recognizing the need for improved methods for analyzing gas turbine engine structures under elevated temperature conditions, a research program was initiated at M.I.T. in April 1980. The objective is to develop computer methods for elastic, elastic-plastic and creep analyses that are applicable to gas turbine structures such as blades and rotors, etc. Such structures include (1) three-dimensional solids of general geometrical shapes, in particular, with cylindrical holes or internal ducts, (2) thin plates and shells and (3) axisymmetric solids under arbitrary loadings including applied torques. The present document is the final report of this research project. Earlier successes were obtained in the study of elastic-plastic and creep analyses for two-dimensional problems using the assumed stress hybrid finite elements [19]. Thus, it was decided to extend this hybrid technique to more general structural geometries indicated above.

During the course of this study, it became obvious that certain basic shortcomings had not been resolved in the assumed stress hybrid method. These are the control of kinematic deformation modes and the establishment of a logical procedure for choosing the optimal stress terms in the finite element formulation. Under the present research program a systematic method has been developed for choosing the assumed stress terms to suppress the kinematic deformation modes. Also through the use of a new version of mixed variational principles a rational procedure has been established for choosing stress terms that are in proper balance with the assumed displacement. In the new version the stress equilibrium conditions are relaxed to the extent that they are satisfied only in variational sense within each elements.

The result is that stresses can now be expressed in natural coordinates hence, in comparison to the old method of derivation, the resulting elements are less sensitive to distortions of the element geometry.

For plate and shell problems the conventional approach is to introduce both lateral displacement w and two rotations at the corner nodes as generalized displacements. A limitation for such element is that when neighboring elements are not co-planar at a node it is not possible to write the complete equations of equilibrium. An alternative is the so called semiLoof element [20] for which only the lateral displacements w is used at the corner node while normal rotations $w_{,n}$ are introduced along the edges to maintain the rotation compatibility along the interelement boundary. It has been discovered that semiLoof elements for plate and shells can be easily formulated by the assumed stress hybrid method.

The method of elastic-plastic analysis studied under the present program is based on the visco-plastic theory [21] . Thus a static elastic-plastic problem is analyzed as a time-dependent problem using a fictitious time and hence can be solved using the same basic computer algorithm for a creep analysis problem. In the present studies the mechanical subelement model [22,23] is used to represent the kinematic hardening behavior. The model has also been extended for anisotropic plastic behavior.

In the following sections the significant findings of the present research programs are described according to the following five tasks:

(1) Constructions of special elements which containing traction-free circular boundaries.

(2) Formulation of new version of mixed variational principle and new version of hybrid stress elements.

(3) Establishment of method for suppression of kinematic deformation modes.

(4) Construction of semiLoof plate and shell elements by assumed stress hybrid method.

(5) Elastic-plastic analysis by viscoplasticity theory using the mechanical subelement model.

Details of the present research findings have been, in major parts, documented in technical papers that have been or are to be published and in several theses that are available for distribution from the Library of the Massachusetts Institute of Technology.

These technical papers are listed as Refs. 1 to 15 and the theses are listed as Refs. 16 to 18 in the reference list of this report. One particular research result that has not been written as a technical paper is the development of a special 3-D solid element which has a traction-free cylindrical boundary. A description of the construction and evaluation of such element is included as Appendix A in this report.

2. CONSTRUCTION OF SPECIAL ELEMENTS CONTAINING TRACTION-FREE CIRCULAR BOUNDARIES

The objective for this task is to develop a special 3-D element that is to be used for analyzing solids which has cylindrical holes or ducts. Through an investigation of the corresponding 2-D plane stress problems [16] it is concluded that the most effective element is one which contains a boundary defined by the actual geometry and for which the traction-free condition can be satisfied exactly. This idea has also be adopted by Schnack and Wolf [24]. The technique used in both references are the assumed stress hybrid method. For the 2-D problem it is easy to make the assumed stresses to satisfy both equilibrium and compatibility condition. This is done by using Airy stress functions which satisfy the bi-harmonic equation in polar coordinates. The traction-free condition at the circular boundary can then be imposed. It is shown in reference 16 and in Appedix A of the present report that this satisfaction of both equilibrium and compatibility condition for the assumed stresses is essential for the excellent performance of the resulting special elements.

For 3-D solids, although equilibrating stresses can be constructed through the use of Maxwell's or Morera's stress functions [25], there is no readily procedure for maintaining also the compatibility equations. The approach taken in the present work is to assume that the changes in all components of stresses are only linear along the direction parallel to the axis of the cylinder which defined the traction-free boundary. In such case, four stress functions can be defined in terms of only r and θ coordinates and, it is easy, to maintain the compatibility condition in the limit that the stresses no longer vary along z. A description of this element and an evaluation of its performance is given in Appendix A.

3. FORMULATION OF NEW VERSIONS OF MIXED VARIATIONAL PRINCIPLE AND NEW VERSION OF HYBRID STRESS ELEMENTS

The original version of the assumed stress hybrid element was based on the principle of minimum complementary energy [26]. Hence, the assumed stress must be made to satisfy the equilibrium equations pointwise. The derivation of hybrid elements has been extended later to the use of Hellinger-Reissner principle [27]. However, the apriori satisfaction of equilibrium equation is still called for. The argument is that without the constraining of the assumed stress in the element level the resulting element will tend to become the conventional assumed displacement element. Because of such specified equilibrating conditions, the assumed stresses for the early versions of hybrid stress elements were always expanded either in Cartesian or cylindrical coordinates. Also because of the difficulty in satisfying the equilibrium equations, the hybrid stress method were never widely used for shell elements.

The restriction of assumed stresses in Cartesian coordinates leads to a rather serious shortcoming. On the one hand, in order to obtain an invariant element the assumed stresses must be complete in polynomial expansions. On the other hand, it has also been well recognized that hybrid elements formulated by using complete polynomials tend to be overly rigid. Performances of such elements also deteriorate badly when element geometry is distorted.

To get around the problem of element invariance properties, methods of remedy have been suggested such as the use of local Cartesian coordinates [28] or local skewed coordinates [29] for the assumed stresses. It is clear that the obvious coordinate system to be used for the assumed stresses is the natural isoparametric coordinates. However, when such system is

used, in general, it is not possible to satisfy the equilibrium equations exactly. A new approach in the formulation of hybrid stress element is to relax the pointwise equilibrium condition but only to maintain its satisfaction in the variational sense. This is accomplished through the following version of the Hellinger-Reissner principle for finite element applications [2].

$$\pi_R = \int_{V_n} [-\frac{1}{2} \underset{\sim}{\sigma}^T \underset{\sim}{S} \underset{\sim}{\sigma} + \underset{\sim}{\sigma}^T (\underset{\sim}{D} \underset{\sim}{u}_q) - (\underset{\sim}{D}^T \underset{\sim}{\sigma}) \underset{\sim}{u}_\lambda] dV = \text{stationary} \tag{3.1}$$

Here the element displacements $\underset{\sim}{u}$ are divided into two parts

$$\underset{\sim}{u} = \underset{\sim}{u}_q + \underset{\sim}{u}_\lambda \tag{3.2}$$

where $\underset{\sim}{u}_q$ are expressed in terms of nodal displacements $\underset{\sim}{q}$ and compatible with neighboring element.

$\underset{\sim}{u}_\lambda$ are expressed in terms of internal parameters $\underset{\sim}{\lambda}$ which are eliminated within the element level through the variational method.

Here $\underset{\sim}{D}^T \underset{\sim}{\sigma} = 0$ is the homogenious equilibrium equation. Thus, equilibrium condition is not imposed initially, but the process $\partial \pi_R / \partial \underset{\sim}{\lambda} = 0$, vill enforce its satisfaction in the element level.

In the finite element formulation, one assumes

$$\underset{\sim}{\sigma} = \underset{\sim}{P} \underset{\sim}{\beta} \tag{3.3}$$

where $\underset{\sim}{P}$ are not coupled among different stress components.

$$\underset{\sim}{u}_q = \underset{\sim}{N}\,\underset{\sim}{q} \tag{3.4}$$

$$\underset{\sim}{u}_\lambda = \underset{\sim}{M}\,\underset{\sim}{\lambda} \tag{3.5}$$

The functional π_R then takes the form

$$\pi_R = -\frac{1}{2}\,\underset{\sim}{\beta}^T\underset{\sim}{H}\,\underset{\sim}{\beta} - \underset{\sim}{\beta}^T\underset{\sim}{G}\,\underset{\sim}{q} - \underset{\sim}{\beta}^T\underset{\sim}{R}\,\underset{\sim}{\lambda} \tag{3.6}$$

where

$$\underset{\sim}{H} = \int_{V_n} \underset{\sim}{P}^T\underset{\sim}{S}\,\underset{\sim}{P}\; dV \tag{3.7}$$

$$\underset{\sim}{G} = \int_{V_n} \underset{\sim}{P}^T(\underset{\sim}{D}\,\underset{\sim}{N})\, dV \tag{3.8}$$

and

$$\underset{\sim}{R} = \int_{V_n} (\underset{\sim}{D}^T\underset{\sim}{P})^T\underset{\sim}{M}\; dV \tag{3.9}$$

From the variation of π_R with respect to $\underset{\sim}{\beta}$ and $\underset{\sim}{\lambda}$ one obtains

$$\underset{\sim}{\beta} = \underset{\sim}{H}^{-1}(\underset{\sim}{G}\,\underset{\sim}{q} - \underset{\sim}{R}\,\underset{\sim}{\lambda}) \tag{3.10}$$

and

$$\underset{\sim}{R}^T\underset{\sim}{\beta} = 0 \tag{3.11}$$

By eliminating $\underset{\sim}{\lambda}$ and recognizing the element strain energy is

$$U = \frac{1}{2}\,\underset{\sim}{q}^T\underset{\sim}{k}\,\underset{\sim}{q} = \frac{1}{2}\,\underset{\sim}{\beta}^T\underset{\sim}{H}\,\underset{\sim}{\beta} \tag{3.12}$$

one can obtain the following expression for the element stiffness matrix $\underset{\sim}{k}$,

$$\underset{\sim}{k} = \underset{\sim}{G}^T\underset{\sim}{H}^{-1}\underset{\sim}{G} - \underset{\sim}{G}^T\underset{\sim}{H}^{-1}\underset{\sim}{R}(\underset{\sim}{R}^T\underset{\sim}{H}^{-1}\underset{\sim}{R})^{-1}\underset{\sim}{R}^T\underset{\sim}{H}^{-1}\underset{\sim}{G} \tag{3.13}$$

In this formulation the equilibrium equations need not be satisfied in Eq. (3.3), the $\underset{\sim}{P}$-matrix can now be expressed in the natural isoparametric coordinates instead of the Cartesian coordinates. The resulting element stiffness matrix will then always be an invariant.

Another possible advantage is that since the $\underset{\sim}{P}$-matrix in Eq. (3.3) is no longer coupled, the flexibility matrix $\underset{\sim}{H}$ can be reduced to a supermatrix with submatrices only along the diagonal. The inversion of such $\underset{\sim}{H}$-matrix can be simplified considerably. Reference 5 gives an example indicating that an eight-node hexahedral element can be constructed more economically using this new method of formulation.

An alternative procedure is to use Eq. (3.10), to constrain equations for $\underset{\sim}{\beta}$ to reduced the assumed stress terms to fewer number of independent β-parameters of the form

$$\underset{\sim}{\sigma} = \underset{\sim}{\bar{P}}\,\underset{\sim}{\beta} \tag{3.14}$$

Then with

$$\underset{\sim}{\bar{H}} = \int_V \underset{\sim}{\bar{P}}^T \underset{\sim}{S}\, \underset{\sim}{\bar{P}}\; dV \tag{3.15}$$

The element stiffness matrix is simply

$$\underset{\sim}{k} = \underset{\sim}{G}^T \underset{\sim}{\bar{H}}^{-1} \underset{\sim}{G} \tag{3.16}$$

In this case, however, the $\underset{\sim}{\bar{P}}$-matrix will, in general, be coupled among the various stress components and the inversion of $\underset{\sim}{\bar{H}}$ matrix cannot be simplified.

One of the criticisms of the assumed stress hybrid method in the early days was its lack of guidelines for selecting the assumed stress terms. It turns out that the new formulation using Eq. (3.1) can lead to a logical way to choose the assumed stresses that are consistent with the assumed displacements. [14,15]

The procedure is as follows: First the element displacement $\underset{\sim}{u}_q$, in general , are not complete polynomials, the $\underset{\sim}{u}_\lambda$ terms are to be chosen so that $\underset{\sim}{u} = \underset{\sim}{u}_q + \underset{\sim}{u}_\lambda$ are now complete up to a certain order. The assumed stresses in Eq. (3.3) are then chosen to be uncoupled and complete polynomials of the same order as that of the strains derived by the displacements $\underset{\sim}{u}$. The resulting constraint equations Eq. (3.11) then yield the ideal independent stress terms $\underset{\sim}{\bar{P}}\underset{\sim}{\beta}$ for the hybrid stress formulation.

One additional step to be introduced in this formulation is that the resulting Eq. (3.11) may be redundant in the sense that the number of independent constraint equations are smaller than the number of λ's. In that case a small perturbation of the element geometry is introduced in order to obtain additional equations [10,11,18]. This method has been applied to different elements including 4-node and 8-node quadrilateral plane elements, 8-node hexahedral element, 4-node axisymmetric elements under symmetric loading & torsional loading 3-node triangular plate element and 16-DOF semiLoof rectangular plate element. [14,15]

Table (3.1) lists the resulting number of independent stress terms obtained by this approach. Indeed, the resulting 5-β stress terms for a rectangular plane stress element are exactly the five terms that have yielded elements which do not have any shear locking difficulty under bending actions [10]. It has been shown that the corresponding 5-β stress

terms in natural coordinates determined by the present method also lead to most desirable element performance [11].

If the desirable stress terms for a problem in Cartesian coordinates have been determined for a regular rectangular or brick-shaped element, the corresponding stress terms for distorted elements can also be constructed by first expressing the tensor stresses τ^{ij} in natural coordinates with the same β-stress terms. The physical components of stresses can then be obtained by the following transformation

$$\sigma^{ij} = J_k{}^i J_\ell{}^j \tau^{k\ell} \tag{3.17}$$

where $J_k{}^i$, $J_\ell{}^j$ are the Jacobians between the two coordinates systems. For the resulting elements to pass the patch-test, it is necessary to take the value of Jacobian at the origin of the element [11,12,18].

Eight-node solid elements have been constructed by the same approach. It is used to analyze the bending of a rectangular bar with two elements which are distorted. The effect of element distortion on the displacement and stress has been studied for this element and for those obtained by the ordinary assumed displacement method and by the original hybrid method using the beam axis as the reference Cartesian axis. It can be shown that the present element is much less sensitive to geometric distortions [12]. It has also been shown that for axisymmetric solids the 4-node elements constructed by the present approach are least sensitive to geometric distortions when compared with all other elements [13].

4. ESTABLISHMENT OF METHOD FOR SUPPRESSION OF KINEMATIC DEFORMATION MODES [6]

When the formulation of the stiffness matrix of an element of n d.o.f. is based on the Hellinger-Reissner principle, the displacement distribution of the element can be represented by $n-\ell$ basic deformation modes with parameters $\underset{\sim}{\alpha}$ and ℓ rigid-body modes with parameters $\underset{\sim}{R}$ in the form of

$$\underset{\sim}{u} = \underset{\sim}{\bar{N}} \begin{Bmatrix} \underset{\sim}{\alpha} \\ \underset{\sim}{R} \end{Bmatrix} \tag{4.1}$$

The deformation energy is then given by

$$U_d = \frac{1}{2} \underset{\sim}{\beta}^T \underset{\sim}{G}_\alpha \underset{\sim}{\alpha} \tag{4.2}$$

In order to prevent any kinematic deformation modes, the assumed stress terms must match the assumed displacements such that the deformation energy will not vanish for any one deformation modes or any combination of basic modes. Two basic steps are:

1. Based on the strain distributions for the basic deformation modes in an element, a choice assumed stresses can be made on a scheme involving one β-stress term for one α-mode. In this case the stress equilibrium conditions are, in general, incorporated.

2. A check should be made that all columns of the G_α matrix in the deformation energy term are linearly independent.

Examples in membrane element, axisymmetric element and brick elements have indicated that there exist a wide choice of assumed stress terms for higher order elements. In that case, it is advisable to relax the equilibrating condition for the higher order stress terms.

5. CONSTRUCTION OF SEMILOOF ELEMENTS AND SHELLS ELEMENTS BY ASSUMED STRESS HYBRID METHOD

Ordinarily the nodal displacements of a plate or shell element are the lateral displacement w and its derivatives in order to maintain the complete interelement compatibility. For plates with both membrane and bending actions and for shells, the number of D.O.F. at the node is equal to five. A drawback for this type of arrangement is in the case when the neighboring elements are not coplanar at the node. In that case six D.O.F. are needed in determining the equilibrium conditions at each node. A remedy suggested by Irons is the semiLoof element [20]. In such element a corner node will have only the u, v and w degrees of freedom, while normal rotations $w_{,n}$ are used along the sides of the element. The formulation of semiLoof elements for plates and shells by the assumed displacement method was accomplished by Irons. The method , however, includes complicated procedures involving the application of a system of constraining conditions.

The assumed stress hybrid method is, however, a natural approach for the construction of semiLoof elements for plates and shells [1,9,18]. In a 16-DOF quadrilateral plate element presently developed the nodal displacements are the lateral displacement w at the corners and the mid-side points and the normal rotation $w_{,n}$ at the 1/3 points along each side. The boundary displacement is approximated by quadratic distribution for w and linear, for $w_{,n}$. The assumed stress couples are chosen by the same approach outlined in section 3, i.e. the additional internal displacements terms w_λ are used to determine the constraint equations for the initially uncoupled stresses. The number of stress terms for the resulting element is 23 while the minimum of terms required to suppress the kinematic deformation modes is only 13. As shown in Reference 15, the 23-stress terms is

apparently the optimum for improving the performance of the element.

Details for the formulation of semiLoof shell elements by the assumed stress hybrid method are presented in Reference 9 and 18. The formulation is based on a modified version of the Hu-Washizu principle. Initial discussion of this method is given in Reference 2. Limited examples with triangular and quadrilateral elements have indicated clearly that the assumed stress hybrid method can now be extended to the construction of general shell elements. Also with appropriate choice of assumed stresses and internal displacements, it is possible to obtain an element for which rigid body motion, and the in-plane and out-of-plane strains can all be decoupled. Reference 18 include examples showing that a cylindrical shell element constructed by the present method can pass very severe tests suggested by Morley [30].

6. ELASTIC-PLASTIC ANALYSIS BY VISCOPLASTICITY THEORY USING THE MECHANICAL SUBELEMENT MODEL

Under the present grant a formulation of time-independent elastic-plastic analysis by the assumed stress hybrid method is made based on viscoplasticity theory and the mechanical subelement model. In the mechanical subelement model the strain hardening behavior is represented by that of individual subelements all of which are elastic-perfectly-plastic but of different yield stresses. The model can approximate the Bauschinger effect for materials under reversal of loading and is most convenient in conjunction with viscoplastic analysis. In Reference 7 the formulation of this method by the Hellinger-Reissner principle is presented in detail and an example solution for a plane-stress shear log problem is given. For this problem the plastic behavior is anisotropic. To accomodate this property, the corresponding mechanical sublayer model is developed and presented in details in Reference 8.

The basic step in the construction of mechanical multi-element model is to determine the relative proportions of the individual elements in terms of the tangent modudii of the individual segments of the piece-wise linear stress-strain diagram. The ordinary procedure is to use the same relative proportions of the individual elements obtained under uniaxial loading conditions for that of solids under multiaxial loading. For example when the modudii for the various segments are given by E_i ($i = 1 \ldots n$), with E_1 being the elastic modulus, the area of the ith element is given by

$$\frac{A_i}{A} = \frac{E_i - E_{i+1}}{E_1} \tag{6.1}$$

where A is the total area of all elements. For the plane stress problem, it turns out that when a plate is modelled as a multi-layered one with elastic-plastic materials of different yield stresses, it will produce a uniaixial stress-strain diagram with the individual segments slightly curved, except the initial elastic segment. For a two-layer model, for example the thickness ratio is

$$\frac{t_1}{t} = \frac{t_1}{t_1+t_2} = \frac{E_1 - E_2}{E_1 - \frac{(1-2\nu)^2}{5-4\nu} E_2} \tag{6.2}$$

where ν is the Poisson's ratio in elastic range and E_2 is the initial tangent modulus at the yield stress. As a comparison for a general 3-D solid the relative proportion of a two-element model is given by [31].

$$\frac{V_1}{V} = \frac{E_1-E_2}{E_1 - \frac{1-2\nu}{3} E_2} \tag{6.3}$$

For 3-D problem, however, a multi-element model will lead to uniaxial stress-train diagram with linear segments.

The detailed procedure for the construction of a multi-layer model to represent a anisotropic plastic behavior is illustrated in Ref. 8.

7. SUMMARY OF ACCOMPLISHMENTS OF THE PRESENT RESEARCH PROGRAM

The following are the important research findings have been obtained under the present research program.

(a) A new version of Hellinger-Reissner principle has been developed for the construction of assumed stress hybrid elements. The main feature is that the assumed stresses need not be in equilibrium in variational sense within each element. The consequence is that the stresses may now be expressed in the natural (isoparametric) coordinates hence the resulting elements are always invariants and are less sensitive to distortions of the element geometries. The new formulation has also pointed out a logical way to match the assumed stresses with the assumed displacements of the element in order to obtain an idea element properties. Examples also indicate that computing effort can be reduced using the new method of formulation.

(b) A method has been developed for choosing the assumed stress terms to suppress any kinematic deformation modes in an assumed stress hybrid element.

(c) Special elements have been constructed for plane and solid elements which contain traction-free circular boundaries.

(d) The hybrid stress method has been extended to the construction of semiLoof elements which are most convenient for plate and shell elements that are not co-planar at the interface have been shown.

(e) Shallow and deep shell element have been successfully constructed by using the Hu-Washizu principle. In the resulting elements the rigid-body motion and the bending and membrane straining modes can be decoupled in order to avoid the shear locking problem.

(f) The mechanical sublayer (subelement) model has been used in conjunction with the viscoplasticity theory for elastic-plastic analysis by the assumed stress hybrid finite element method. A method has been developed to construct sublayer models for anisotropic plasticity behavior.

APPENDIX A

EIGHT-NODE SOLID ELEMENT WITH A TRACTION-FREE CIRCULAR SURFACE

A-1. INTRODUCTION

For stress analyses of solids with traction-free cylindrical surfaces by the finite element method it is more advantageous to use special solid elements which contain traction free circular surfaces. For this purpose the assumed stress hybrid element is most suitable. For plane stress and plane strain problems it is convenient to use stress functions in polar coordinates to maintain not only stress equilibrium condition, traction-free condition along the circular boundary and also the compatibility condition [16]. It has been shown that 4-node elements constructued under such stress assumptions yield much more accurate results than that by using ordinary assumed finite element elements and ordinary assumed stress hybrid elements. The present note is to described the formulation for a special 3-D solids element which contain traction free cylindrical surfaces.

A-2. GEOMETRY OF 8-NODE SOLID ELEMENT

An element with a traction-free cylindrical surface is shown in Figure A-1. In this case, it is obvious that a cylindrical coordinates, r, θ, and z that define the traction-free surface ABCD is the most logical reference coordinates. The two planes DCGH and ABFE are parallel to each other and are perpendicular to the z-axis, while the planes CBFG and DAEH are on planes in radial direction. The plane EFGH is parallel to the z-axes but may make any angle with the x-axis.

The hybrid stress element in the very original form [26], is derived by using the principle of minimum complementary energy. The stresses in

the element are in exact equilibrium and are expressed in terms of finite number of parameters

$$\underset{\sim}{\sigma} = \underset{\sim}{P}\,\underset{\sim}{\beta} \tag{A-1}$$

For this special element the traction-free condition along A B C D is also maintained.

The displacements $\underset{\sim}{\tilde{u}}$ along the element boundary are then interpolated in terms of the nodal displacements $\underset{\sim}{q}$ i.e.

$$\underset{\sim}{\tilde{u}} = \underset{\sim}{L}\,\underset{\sim}{q} \tag{A-2}$$

The corresponding surface tractions $\underset{\sim}{T}$ is determined by

$$\underset{\sim}{T} = \underset{\sim}{\nu}^T\underset{\sim}{\sigma} = \underset{\sim}{\nu}^T\underset{\sim}{P}\,\underset{\sim}{\beta} = \underset{\sim}{R}\;\underset{\sim}{\beta} \tag{A-3}$$

where $\underset{\sim}{\nu}$ = matrix of direction cosines

and

$$\underset{\sim}{R} = \underset{\sim}{\nu}^T\underset{\sim}{P} \tag{A-4}$$

From the principle of minimum complementary energy

$$\pi_c = \int_{V_n} \frac{1}{2}\,\underset{\sim}{\sigma}^T\underset{\sim}{S}\,\underset{\sim}{\sigma}\,dV - \int_{S_u} \underset{\sim}{T}^T\,\underset{\sim}{\tilde{u}}\;dS = \text{minimum} \tag{A-5}$$

the element stiffness matrix $\underset{\sim}{k}$ is then given by

$$\underset{\sim}{k} = \underset{\sim}{G}^T\underset{\sim}{H}^{-1}\underset{\sim}{G} \tag{A-6}$$

where

$$\underset{\sim}{H} = \int_{V_n} \underset{\sim}{P}^T\underset{\sim}{S}\,\underset{\sim}{P}\;dV \tag{A-7}$$

and $$\underset{\sim}{G} = \int_{S_u} \underset{\sim}{R}^T \underset{\sim}{L} \, dS \tag{A-8}$$

Here V_n and S_{u_n} are respectively the volume and the prescribed boundary displacement boundary of the nth element. Because the surface A B C D is traction-free it will not appear in the determination of the G-matrix.

The equilibrium equations are

$$\frac{\partial \sigma_r}{\partial r} + \frac{1}{r}\frac{\partial \tau_{\theta r}}{\partial \theta} + \frac{\partial \tau_{zr}}{\partial z} - \frac{\sigma_r - \sigma_\theta}{r} = 0$$

$$\frac{\partial \tau_{r\theta}}{\partial r} + \frac{1}{r}\frac{\partial \sigma_\theta}{\partial \theta} + \frac{\partial \tau_{z\theta}}{\partial z} + \frac{2\tau_{r\theta}}{r} = 0 \tag{A-9}$$

$$\frac{\partial \tau_{rz}}{\partial r} + \frac{1}{r}\frac{\partial \tau_{\theta z}}{\partial \theta} + \frac{\partial \sigma_z}{\partial z} + \frac{\tau_{zr}}{r} = 0$$

The construction of equilibrating stresses can be most conveniently accomplished through the use of stress functions. When the variations of all the stress components are assumed to include only up to linear terms along the z direction it is possible to obtain two different sets of stress function in (r,θ) coordinates. Each of these contains four stress functions. Based on a preliminary investigation of performances of elements derived by these two versions, only the one indicated in the following is used in the present development. The equilibrium equations Eq. (A-9) are satisfied if the stresses are expressed in terms of four stress functions $\phi_i(r,\theta)$, $i = 1,2,3,4$ in the following manner:

$$\sigma_r = \frac{1}{r}\frac{\partial\phi_1}{\partial r} + \frac{1}{r^2}\frac{\partial^2\phi_1}{\partial\theta^2} + z\left(\frac{1}{r}\frac{\partial\phi_2}{\partial r} + \frac{\partial^2\phi_2}{\partial\theta^2}\right)$$

$$\sigma_\theta = \frac{\partial^2\phi_1}{\partial r^2} + z\frac{\partial^2\phi_2}{\partial r^2}$$

$$\tau_{r\theta} = \frac{1}{r^2}\frac{\partial\phi_1}{\partial\theta} - \frac{1}{r}\frac{\partial^2\phi_1}{\partial r\partial\theta} + z\left(\frac{1}{r^2}\frac{\partial\phi_2}{\partial\theta} - \frac{1}{r}\frac{\partial^2\phi_2}{\partial r\partial\theta}\right)$$

$$\tau_{rz} = \frac{1}{r}\frac{\partial\phi_3}{\partial r}$$

$$\tau_{\theta z} = \frac{1}{r}\frac{\partial^2\phi_3}{\partial r\partial\theta}$$

$$\sigma_z = \phi_4 - \frac{z}{r}\left[\frac{\partial^2\phi_3}{\partial r^2} + \frac{1}{r}\frac{\partial^3\phi_3}{\partial r\partial\theta^2}\right] \qquad \text{(A-10)}$$

The assumed equilibrating stresses can then be obtained by expanding the stress functions as trigonometric functions along θ and polynomials along r. The stress terms are also chosen to satisfy the traction-free condition along the cylindrical surface.

From an evaluation of the resulting displacement and stress distributions of a thin plate with a circular hole obtained by using different expansions for stress functions in the finite element formulation the following set of assumed stresses was chosen.

$$\begin{aligned}\sigma_r = {} & \left(1 - \frac{a^2}{r^2}\right)\beta_1 + \left(1 + \frac{3a^4}{r^4} - \frac{4a^2}{r^2}\right)\cos 2\theta\ \beta_2 + \left(1 + \frac{3a^4}{r^4} - \frac{4a^2}{r^2}\right)\sin 2\theta\ \beta_3 \\ & + \left(r - \frac{a^4}{r^3}\right)\cos\theta\ \beta_4 + \left(r - \frac{a^4}{r^3}\right)\sin\theta\ \beta_5 + \left(r - 5\frac{a^4}{r^3} + 4\frac{a^6}{r^5}\right)\cos 3\theta\ \beta_6 \\ & + \left(r - 5\frac{a^4}{r^3} + 4\frac{a^6}{r^5}\right)\sin 3\theta\ \beta_7 \\ & + z\left[\left(1 - \frac{a^2}{r^2}\right)\beta_8 + \left(1 + \frac{3a^4}{r^4} - \frac{4a^2}{r^2}\right)\cos 2\theta\ \beta_9 + \left(1 + \frac{3a^4}{r^4} - \frac{4a^2}{r^2}\right)\sin 2\theta\ \beta_{10}\right]\end{aligned}$$

$$\sigma_\theta = (1+\frac{a^2}{r^2})\beta_1 - (1+3\frac{a^4}{r^4})\cos 2\theta\ \beta_2 - (1+3\frac{a^4}{r^4})\sin 2\theta\ \beta_3 + (3r+\frac{a^4}{r^3})\cos\theta\ \beta_4$$

$$+ (3r+\frac{a^4}{r^3})\sin\theta\ \beta_5 - (r-\frac{a^4}{r^3}+4\frac{a^6}{r^5})\cos 3\theta\ \beta_6 - (r-\frac{a^4}{r^3}+4\frac{a^6}{r^5})\sin 3\theta\ \beta_7$$

$$+ z[(1+\frac{a^2}{r^2})\beta_8 - (1+3\frac{a^4}{r^4})\cos 2\theta\ \beta_9 - (1+3\frac{a^4}{r^4})\sin 2\theta\ \beta_{10}]$$

$$\tau_{r\theta} = -(1-3\frac{a^4}{r^4}+2\frac{a^2}{r^2})\sin 2\theta\ \beta_2 + (1-3\frac{a^4}{r^4}+2\frac{a^2}{r^2})\cos 2\theta\ \beta_3 + (r-\frac{a^4}{r^3})\sin\theta\ \beta_4$$

$$- (r-\frac{a^4}{r^3})\cos\theta\ \beta_5 - (r+3\frac{a^4}{r^3}-4\frac{a^6}{r^5})\sin 3\theta\ \beta_6 + (r+3\frac{a^4}{r^3}-4\frac{a^6}{r^5})\cos 3\theta\ \beta_7$$

$$+ z[-(1-3\frac{a^4}{r^4}+2\frac{a^2}{r^2})\sin 2\theta\ \beta_9 + (1-3\frac{a^4}{r^4}+2\frac{a^2}{r^2})\cos 2\theta\ \beta_{10}]$$

$$\tau_{rz} = (1-\frac{a^2}{r^2})\beta_{11} + (r-\frac{a^4}{r^3})\cos\theta\ \beta_{12} + (r-\frac{a^4}{r^3})\sin\theta\ \beta_{13} + (1-\frac{a^4}{r^4})\cos 2\theta\ \beta_{14}$$

$$+ (1-\frac{a^4}{r^4})\sin 2\theta\ \beta_{15}$$

$$\tau_{\theta z} = -(r-\frac{a^4}{r^3})\sin\theta\ \beta_{12} + (r-\frac{a^4}{r^3})\cos\theta\ \beta_{13} - 2(1-\frac{a^4}{r^4})\sin 2\theta\ \beta_{14} + 2(1-\frac{a^4}{r^4})\cos 2\theta\ \beta_{15}$$

$$\sigma_z = \beta_{16} + r\beta_{17} + \theta\beta_{18} - \frac{z}{r}[(1+\frac{a^2}{r^2})\beta_{11} + (r+\frac{3a^4}{r^3})\cos\theta\ \beta_{12}$$

$$+ (r+\frac{3a^4}{r^3})\sin\theta\ \beta_{13}\ \ (3-7\frac{a^4}{r^4})\cos 2\theta\ \beta_{14}\ \ (3-7\frac{a^4}{r^4})\sin 2\theta\ \beta_{15}] \qquad \text{(A-11)}$$

It is seen that there are 18 independent β-parameters which is the minimum number required for the suppression of kinematic deformation modes [6].

Unlike the two-dimensional problems it is not possible to choose the stresses that also satisfy the compatibility equations. The set of stresses given by equation A-11, however, does satisfy the compatibility equations in the limiting cases when the stresses do not very along z.

It is seen that although the cylindrical coordinates are used for the stresses, other coordinate systems must also be included in the formulation. For example, it is more convenient to use u, v and w in Cartesian coordinates for the nodal displacements and the interpolation functions L (Eq. A-2) for all the boundary surface, in particular, for the top bottom surfaces DCGH and ABFE, are bi-linear shape functions in the natural coordinates (ξ,η,ζ) system similar to the isoparametric coordinates. In the integration of the H-matrix (Eq. A-7) over the volume of the element Gaussian quadrature method is used. This is also based essentially on the use of the natural coordinate (ξ,η,ζ) system.

A-3. NUMERICAL RESULTS

1. A rectangular plate with a circular hole

A thin plate of a dimension 4R x 8R x 0.1R with a circular hole of radius R at the center is acted by uniform tensile loading at the two ends as shown in Figure A-2. The problem has also been analyzed as a plane stress problem by Kafie [16] using different elements and two different mesh patterns. It is also analyzed here using only one layer of 3-D solid elements in two different meshes shown in Figure A-3. The average values of circumferential stress σ_θ along the thickness direction at point A of the rim of the hole is given in Table A-1. It is expected that if a 4-node plane stress element with one circular boundary is formulated by take from Eq. A-11 only the plane

stress terms σ_r, σ_θ and $\tau_{r\theta}$ that are not varying with z, the result should be identical to that of the present 3-D analysis. The equivalent 2-D element, thus, is one derived by using β_1 to β_7 terms in Eq. (A-11). This is a stress pattern which satisfies the compatibility condition in addition to the equilibrium and traction free conditions. In Kafie's study, a similar plane stress element was derived using only β_1 to β_5 terms in Eq. (A-11). For comparison of element performance Kafie also included two hybrid elements with circular boundaries derived by using stresses which do not satisfy the compatibility conditions. These results are also given in Table A-1. It is clear that the satisfaction of compatibility conditions in the stress terms is essential for achieving a good element performance. This comparison also shows that the present element with 7 β-parameters for the plane stress terms yields better accuracy than that by the 5 β-parameter element.

In Kafie's study some higher order elements with 8 and 10 nodes were derived using the assumed stress hybrid method. These correspond to the use of 3 and 5 nodes respectively to represent the curved boundary. The results obtained by these elements as well as that by using eight node isoparametric element derived by the conventional assumed displacement approach are also included in Table A-1. The total numbers of unconstrained D.O.F. used in the different solution are also listed in the table. It can be seen that the 8-node assumed displacement element actually performs very well in comparison to some of the hybrid stress elements. But the present hybrid element which is derived by using stresses which satisfy both equilibrium and compatibility conditions and also prescribed traction-free conditions clearly yields the best performance.

2. A thin square plate with a circular hole

A square plate of 8R x 8R with a center hole of radius equal to R and thickness equal to 0.1R is acted by uniform tension along two opposite edges. The problem is analyzed by only one layer of elements using two different meshes with 4 and 16 elements respectively for 1/4 of the plate as shown in Fig. A-4. The distributions of the circumferential stresses σ_θ around the rim of the hole are obtained by the following two systems of elements and are shown in Table A-2.

(1) combining the present elements with ordinary 8 node hybrid stress elements which are derived by expanding in stresses in natural isoparametric coordinates with 18-β parameters

and (2) using the ordinary 18-β hybrid stress elements everywhere.

The analytical solution given by Hengst [32] is included for comparison. The solutions obtained using mesh-2 are also plotted in Figure A-5. It is seen that the stress σ_θ obtained by the finer mesh is already very close to the analytical solution. It is to be remarked that an even finer mesh with 36 elements was tried with the size of the special element limited to only 0.25R. But the results are worse than that by obtained only 16 elements. This means that if the special elements cover too thin a layer from the rim of the hole the special contribution of the element cannot be fully utilized.

3. A square block with a circular hole

A square block of 8R x 8R with a center hole of radius equal to R and thickness equal to 2R is acted by uniform tension over two opposite faces. The Poisson's ratio for the material is taken as 0.25. The problem is analyzed by using 64 elements over one-eighth of the block as shown in

Figure A-6. It is seen that the mesh pattern from the top view is the same as mesh-2 in Figure A-3. Solutions are obtained again by two different element arrangements: (1) one layer of special elements are used around the rim of hole, (2) all elements are ordinary 8-node hybrid stress elements. The resulting solutions for σ_θ for $\sigma = \pi/2$ and σ_z for $\theta = 0$ and $\theta = \pi/2$ at the face and the middle plane along the rim of the circular hole are shown in Table A-2.

There is no analytical solution for this problem. The only similar problem that has been analyzed is the stretching of a thick plate of infinite dimension with a circular hole. Green [33] and Sternberg and Sadowsky [34] have treated this problem and obtained the distributions of σ_θ and σ_z around the rim of the hole. In both cases, similar to the present problem, the thickness of the plate is equal to the diameter of hole. However Green used $\nu = 0.25$, and Sternberg et al used $\nu = 0.3$. According to Green's solution the circumferential stress σ_θ at $\theta = 90°$ and at the face of the plate is lower by 7.2% in comparison to its average value through the plate thickness while at the middle plane of the plate it is higher by 2.4%. The normal stress σ_z at the rim of the hole of course should be zero at the face. The values at the middle plane are given as 0.27% and -0.27% respectively at $\theta = \pi/2$ and 0.

It is now hypothesized that for the present problem the average stresses across the thickness of the plate is equal to that given by the 2-D problem given in Ref. [32] and that ratios between the values at the face and the middle plane of the plate to the average value are the same as that for the problem of circular hole in an infinite plate. The values of estimated in this way are also given in Table A-3. It is seen that the use of special elements around the rim of the hole yield much closer to the

reference solutions in comparison to those by using the ordinary hybrid stress elements alone. On the other hand, the present method does not seem to provide any improvement for the solution of σ_z.

REFERENCES

[1] T.H.H. Pian, "On Hybrid and Mixed Finite Element Methods," Proc. Invitational Symposium on Finite Element Method, Hefei, Anhui, China, May 19-23, 1981. Science Press, pp. 1-19, 1982.

[2] T.H.H. Pian and D.P. Chen, "Alternative Ways for Formulation of Hybrid Stress Elements," Int. J. Num. Meth. Engng, 18, 1982, pp. 1679-1684.

[3] T.H.H. Pian, "Re-examination of Variational Formulations of Finite Element Methods in Structural Mechanics," Proc. of 6th Symposium on the Unification of Finite Elements -- Finite Differences and Calculus of Variations. Edited by H. Kardestuncer. University of Connecticut, May 1982, pp. 11-23.

[4] T.H.H. Pian, "Recent Advances in Hybrid/Mixed Finite Elements," Proc. Int. Conf. on Finite Element Methods, Shanghai 1982. Edited by He Guangqian and Y.K. Cheung, Science Press Beijing, 1982, pp. 82-89.

[5] T.H.H. Pian, D.P. Chen and D. Kang, "A New Formulation of Hybrid/Mixed Finite Element," Computers and Structures, 16, 1983, pp. 81-87.

[6] T.H.H. Pian and D.P. Chen, "On the Suppression of Zero Energy Deformation Modes," Int. J. Num. Meth. Engng, 19, 1983, pp. 1741-1752.

[7] T.H.H. Pian, "Plasticity, Visco-plasticity and Creep of Solids by Mechanical Subelement Models," Numerical Methods for Coupled Problems. Edited by R.W. Lewis, E. Hinton, and B. Bettess. London: Wiley, 1984, pp. 119-126.

[8] T.H.H. Pian, "Time-Independent Anisotropic Plastic Behavior by Mechanical Subelement Models," in Nonlinear Constitutive relations for High Temperature Applications, NASA Conference Publication 2271, 1982, pp. 283-299. Also published in Applied Math and Mech. (English Ed.) HUST Press,Wuhan,China, 5, No. 4, 1984, pp. 1425-1435.

[9] T.H.H. Pian and K. Sumihara, "Hybrid SemiLoof Elements for Plate and Shells Based Upon a Modified Hu-Washizu Principle," Computers and Structures, 19, 1984, pp. 165-173.

[10] T.H.H. Pian, "On the Equivalence of Non-Conforming Elements and Hybrid Stress Elements," Applied Mathematics and Mechanics, EUST Press, Wuhan, China, 3, 1982, pp. 773-776.

[11] T.H.H. Pian and K. Sumihara, "Rational Approach for Assumed Stress Finite Elements," Int. J. Num. Meth. Engng, 20, 1984, pp. 1685-1695.

[12] T.H.H. Pian, K. Sumihara and D. Kang, "New Variational Formulations of Hybrid Stress Elements," in Nonlinear Structural Analysis, NASA Conference Publication 2295, 1984, pp. 17-29.

[13] Z.S. Tian and T.H.H. Pian, "Axisymmetric Solid Elements by a Rational Hybrid Stress Method," Symposium on Advances and Trends in Structures and Dynamics, Washington, D.C. Oct. 22-25, 1984 and to be published in Computers and Structures.

[14] T.H.H. Pian, "Evolution of Assumed Stress Hybrid Element," in Accuracy, Reliability Training in FEM Technology. Edited by J. Robinson, Robinson & Associates, Dorset, England, 1984, pp. 602-619.

[15] T.H.H. Pian, "Finite Elements Based on Consistently Assumed Stresses and Displacements," to be published in Finite Elements in Analisys and Design.

[16] Kurosh Kafie, "Traction Free Finite Elements with the Assumed Stress Hybrid Model," M.S. Thesis, Department of Aeronautics and Astronautics, M.I.T., June 1981.

[17] David S. Kang, "C° Continuity Elements by Hybrid Stress Method," M.S. Thesis, Department of Aeronautics and Astronautics, M.I.T., September 1981.

[18] Kiyohide Sumihara, "Thin Shell and New Invariant Elements by Hybrid Stress Method," Ph.D. Thesis, Department of Aeronautics and Astronautics, M.I.T., June 1983.

[19] T.H.H. Pian and S.W. Lee, "Creep and Viscoplastic Analysis by Assumed Stress Hybrid Finite Elements," Proc. International Conference on Finite Elements on Nonlinear Solids and Structural Mechanics, Norwegian Institute of Technology, Trondheim, 1983, pp. 807-822.

[20] B.M. Irons, "The SemiLoof Shell Element," in Finite Elements for Thin Shells and Curved Membrane. Edited by D.G. Ashwell and G.H. Gallagher, Wiley, 1976, pp. 197-222.

[21] P. Persyna, "Fundamental Problems in Viscoplasticity," Advances in Applied Mechanics, 9, 1966, pp. 243-377.

[22] G.N. White, "Application of the Theory of Perfectly Plastic Solids to Stress Analysis of Stress Hardening Solids," Division of Appl. Maths, Brown University, T.R. No. 51, 1950.

[23] J.W. Leech, E.A. Witmer and T.H.H. Pian, "Numerical Calculation Technique for Large Elastic-Plastic Transient Deformations of Thin Shells," AIAA J., 6, No. 12, 1968, pp. 2352-2359.

[24] E. Schnack and M. Wolf, "Application of Displacement and Hybrid Stress Methods to Plane Notch and Crack Problems," Int. J. Num. Meth. Engng., 12, 1978, pp. 963-975.

[25] K. Washizu, Variational Methods in Elasticity and Plasticity, 3rd. Ed. Pergamon Press 1982.

[26] T.H.H. Pian "Derivation of Element Stiffness Matrices by Assumed Stress Distributions," AIAA J., 2, 1964, pp. 1333-1336.

[27] T.H.H. Pian, "Finite Element Methods by Variational Principles with Relaxed Continuity Requirement," Variational Methods in Engineering, Edited by C.A. Brebbia and H. Tottenham, Southampton University Press, 1973, pp. 3/1-3/24.

[28] R.D. Cook, "Improved Two-dimensional Finite Element," ASCE J. Structural Div. ST9, Sept. 1974, pp. 1851-1863.

[29] G.W. Haggenmacher, "A Case for Stress Field Elements," Accuracy Reliability Training in FEM Technology. Edited by John Robinson., Robinson and Associates, Dorset, England, 1984, pp. 129-144.

[30] L.S.D. Morley, "Analysis of Developable Shells with Special Reference to the Finite Element Method and Circular Cylinders," Phylosophical Transactions, Royal Society of London. 281, 1976, pp. 113-170.

[31] B. Hunsaker, Jr., W.E.Haisler and J.A. Stricklin, "On the Use of Two Hardening Rates of Plasticity in Incremental and Pseudo Force Analysis," in Constitutive Equations in Viscoplasticity, Computational and Engineering Aspect, AMD, 20, 1976, pp. 139-170.

[32] H. Hengst, "A Hole in a Square Plate" Math. Mech. 18, 1938, pp. 44-48.

[33] A.E. Green, "Three-Dimensional Stress Systems in Isotropic Plates," Phil. Trans. Royal Society London, Series A, 193, 1948, pp. 561-597.

[34] E. Sternberg and M.A. Sadowsky, "Three-Dimensional Solution for the Stress Concentration Around a Circular Hole in a Plate of Arbitrary Thickness," J. Appl. Mech., 16, 1949, pp. 27-38.

NUMBER OF STRESS AND DISPLACEMENT TERMS FOR CONSTRUCTION OF HYBRID STRESS ELEMENTS'

ELEMENT TYPE	4-NODE PLANE STRESS	8-NODE PLANE STRESS	8-NODE SOLID	4-NODE AXISYMMETRIC SOLID		4-NODE AXISYMMETRIC SOLID UNDER TORSION		3-NODE THIN PLATE	16-DOF SEMILOOF PLATE
HIGHEST ORDER OF COMPLETE $\underset{\sim}{u}$ TERMS	2ND	4TH	3RD	2ND		2ND		3RD	5TH
TOTAL NUMBER OF $\underset{\sim}{u}$	12	30	60	12		6		10	21
NUMBER OF $\underset{\sim}{u}_q$ n=	8	16	24	8		4		9	16
NUMBER OF $\underset{\sim}{u}_\lambda$ I=	4	14	36	4		2		1	5
RIGID BODY DOF r=	3	3	6	1		1		3	3
MINIMUM STRESS TERMS REQUIRED n-r=	5	13	18	7		3		6	13
HIGHEST ORDER OF COMPLETE $\underset{\sim}{\sigma}$ TERMS	1ST	3RD	2ND	1ST		1ST		1ST	3RD
TOTAL NUMBER $\underset{\sim}{\sigma}$ J=	9	30	60	12		6		9	30
NUMBER OF EQUILIBRIUM EQ's i=	2	12	12	2	4	1	2	0	3
ADDITIONAL EQ's OF CONSTRAINTS FROM PERTURBATION k=	2	4	30	2	0	1	0	3	4
TOTAL NUMBER OF INDEPENDENT STRESS PARAMETERS m=J-i-k	5	14	18	8	8	4	4	6	23

TABLE A-1

COMPARISON OF COMPUTED STRESS CONCENTRATION FACTORS (SCF) FOR RECTANGULAR PLATE WITH CIRCULAR HOLE UNDER TENSION (2-D PROBLEM)

Type of Elements	Coarse Mesh			Finer Mesh		
	DOF	SCF	%error	DOF	SCF	%error
present special elements degenerated to 2D, (7β) and ordinary hybrid stress elements	16	4.19	-3.0%	42	4.24	-1.8%
2D special elements (5β, compatibility enforced) and ordinary hybrid stress elements	16	4.52	4.6%	42	4.13	-4.4%
2D special elements (9β, compatibility not enforced) and ordinary hybrid stress elements	16	3.00	-30%	42	3.79	-12.2%
2D special elements (12β, compatibility not enforced) and ordinary hybrid stress elements	16	2.77	-36%	42	3.96	-8.3%
8-node assumed displacement elements	36	4.22	-2.4%	106	4.46	3.3%
8-node hybrid stress element	36	3.05	-29%	106	4.29	-0.8%
10-node and 8-node hybrid stress elements	44	3.03	-30%	122	4.21	-2.6%

Reference solution SCF = 4.32

TABLE A-2

COMPUTED CIRCUMFERENT STRESS ALONG THE RIM OF CIRCULAR HOLE IN A SQUARE PLATE UNDER TENSION

(thickness = 0.1R ν = 0.5)

		Angle θ	0°	22.5°	45°	67.5°	90°
coarse mesh	present special elements and ordinary hybrid element	σ_θ/σ_0	-1.8661		0.9822		3.494
		error%	26.7		-7.8		-2.4
	all ordinary hybrid element	σ_θ/σ_0	-0.4952		0.9162		2.2580
		error%	66.4		-14.0		-36.9
finer mesh	present special elements and ordinary hybrid elements	σ_θ/σ_0	-1.4141	-0.7124	1.0681	2.770	3.4681
		error%	-3.9	-1.7	0.3	-2.4	-3.1
	all ordinary hybrid elements	σ_θ/σ_0	-0.9606	-0.3849	1.0367	2.4287	2.9843
		error%	-34.7	-46.9	-2.7	-12.5	-16.6
Analytical solutions σ_θ/σ_0			-1.4718	-0.7249	1.0651	2.844	3.580

TABLE A-3

COMPUTED STRESSES σ_θ AND σ_z ALONG THE RIM OF CIRCULAR HOLE IN A THICK SQUARE BLOCK UNDER TENSION

	θ	location along z	present special elements and ordinary hybrid stress elements	all ordinary elements	Estimated Reference Solution
$\frac{\sigma_\theta}{\sigma_0}$	$\pi/2$	face	3.298	2.756	3.32
		middle plane	3.552	3.075	3.67
$\frac{\sigma_z}{\sigma_0}$	$\pi/2$	face	0.110	0.026	0
		middle plane	0.225	0.297	0.27
	0	face	-0.109	0.022	0
		middle plane	-0.242	-0.230	-0.27

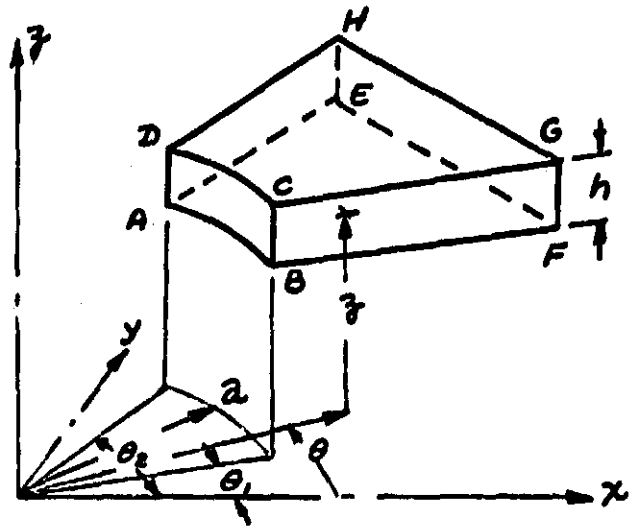

Figure A-1 Geometry of special 8-node element with traction-free cylindrical boundary

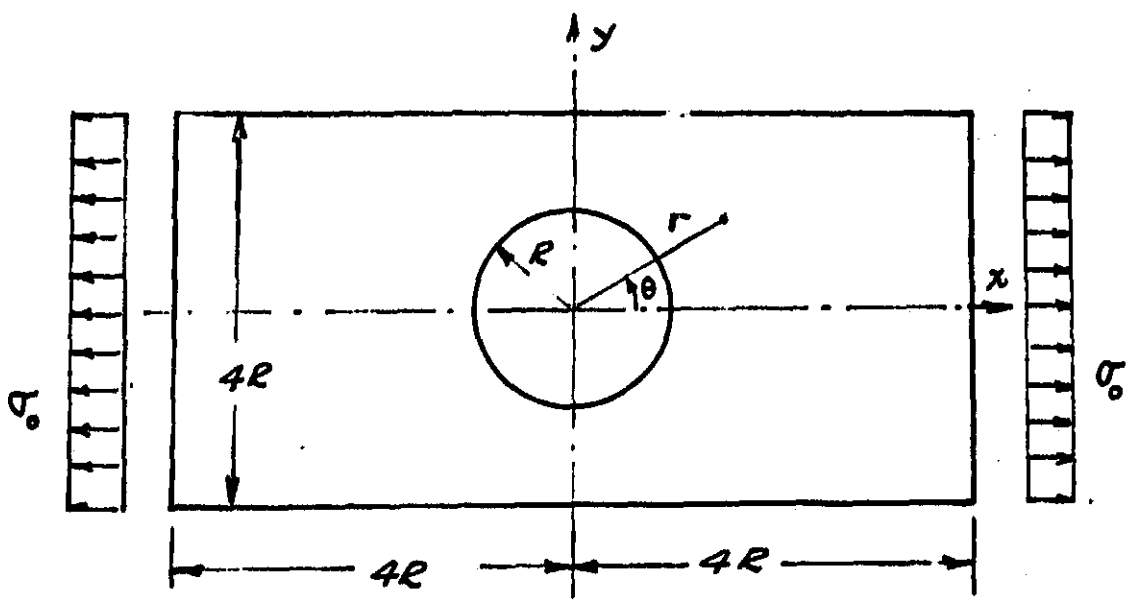

Figure A-2 Thin rectangular plate with circular hole under longitudinal tension $\nu = 0.25$

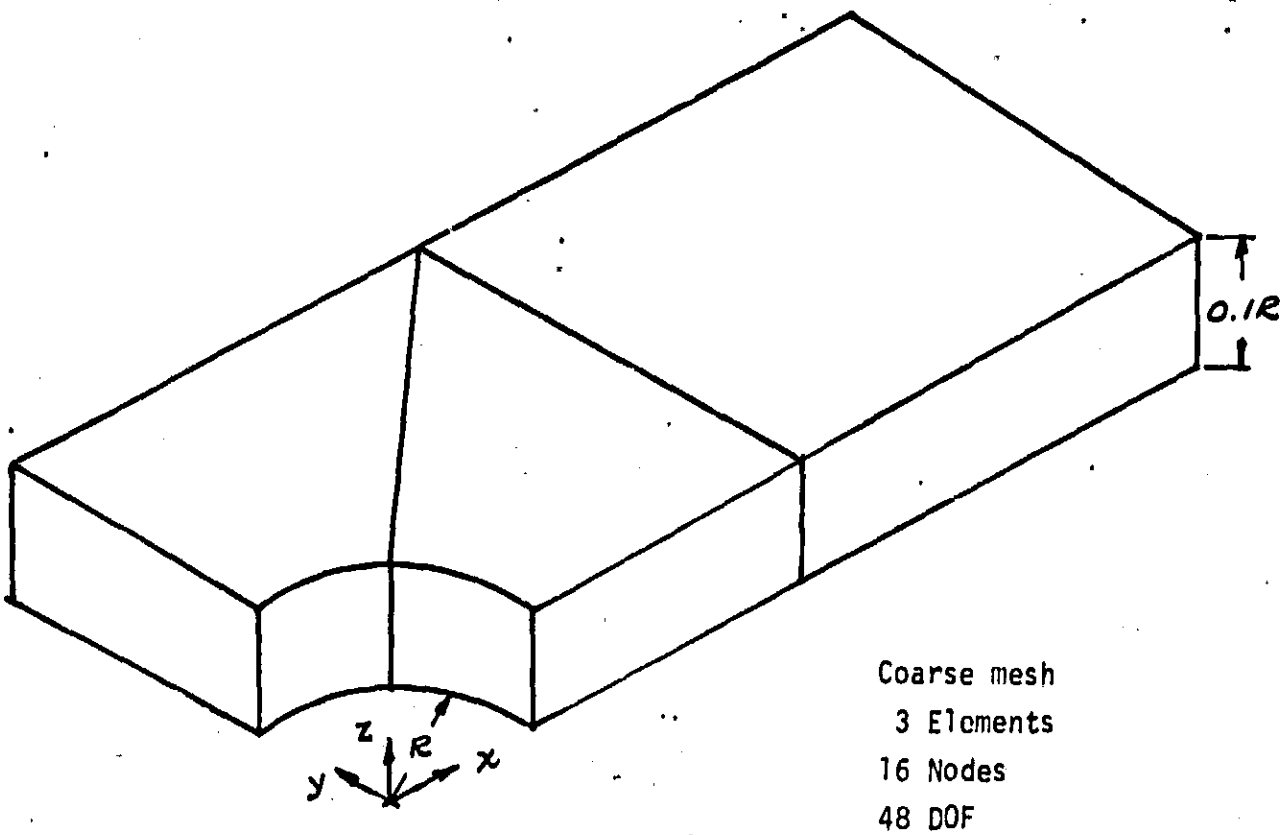

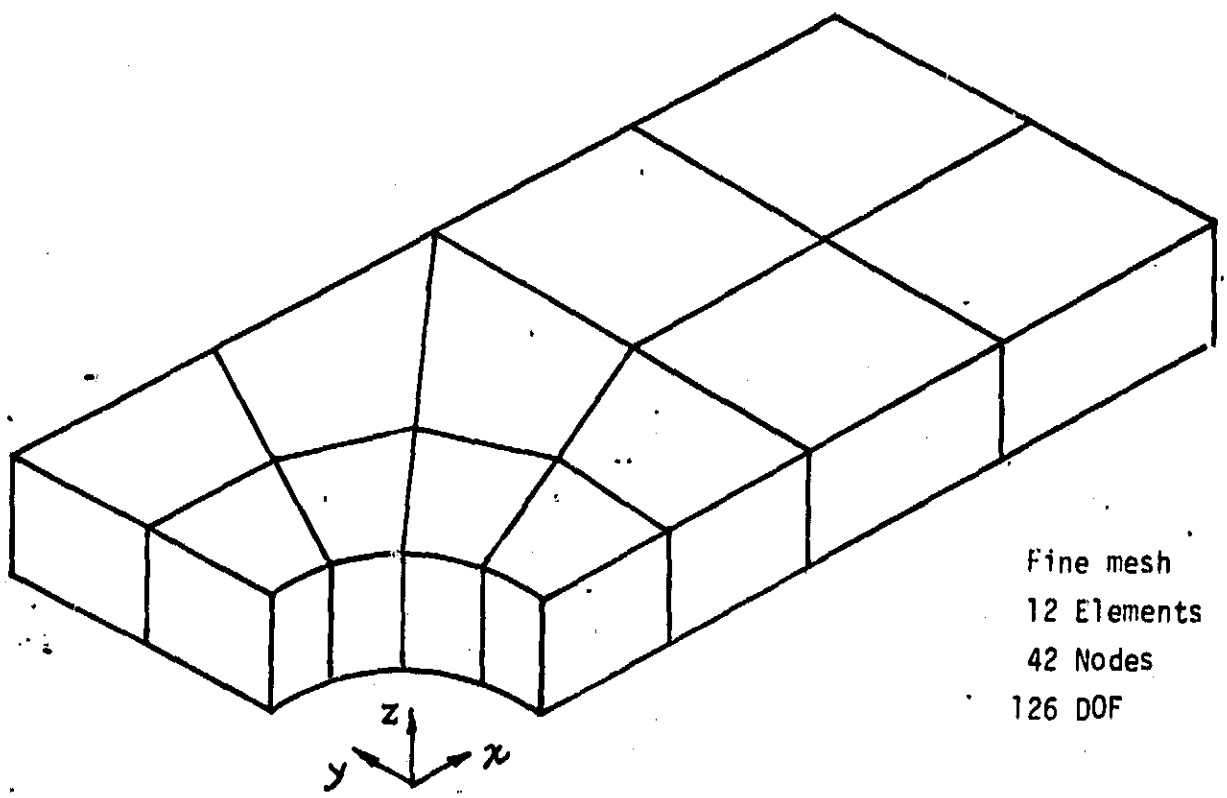

Figure A-3 Two meshes for one-quarter of rectangular plate with circular hole

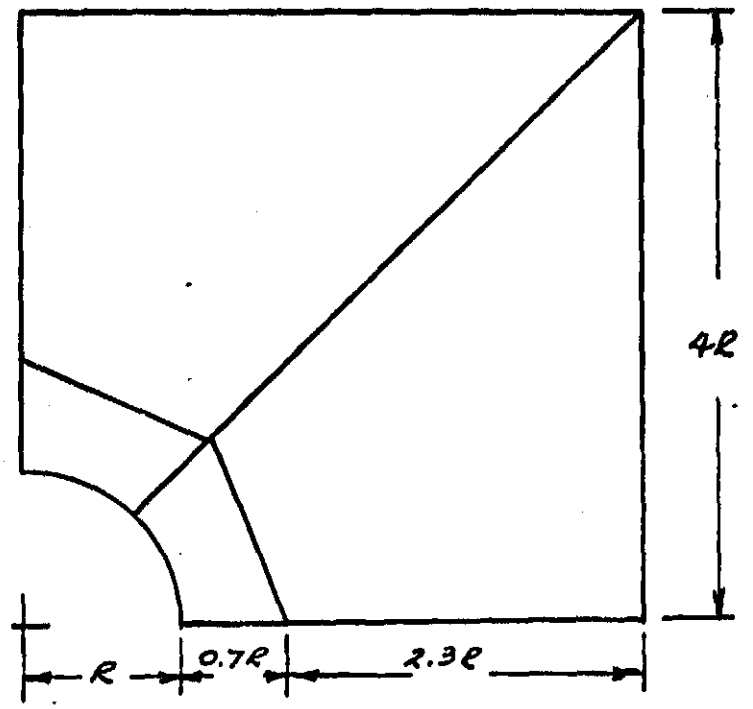

coarse mesh
4 Elements

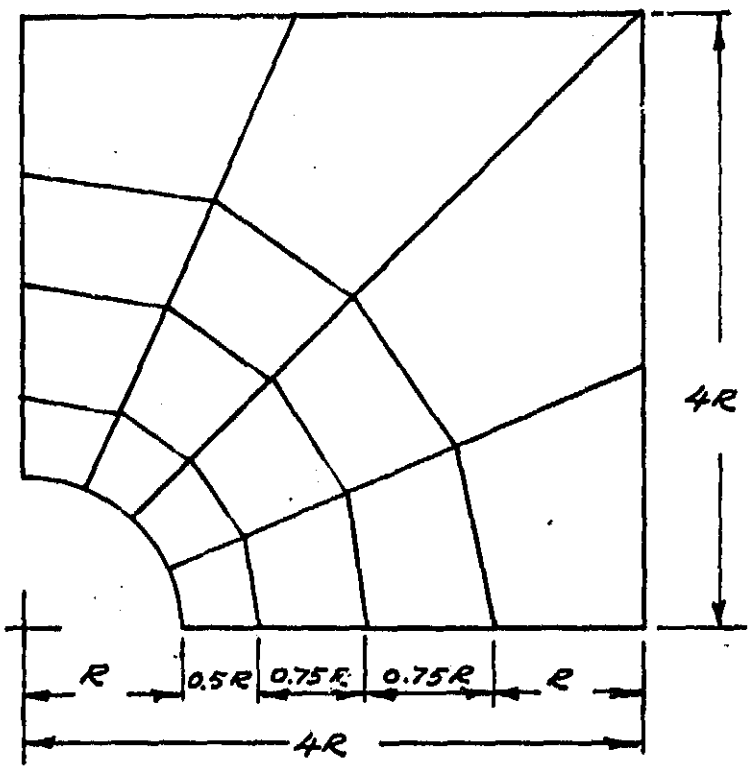

fine mesh
16 Elements

Figure A-4 Thin square plate with circular hole under tension load ($h = 0.1R$, $\nu = 0.25$) – two meshes for one quarter of plate

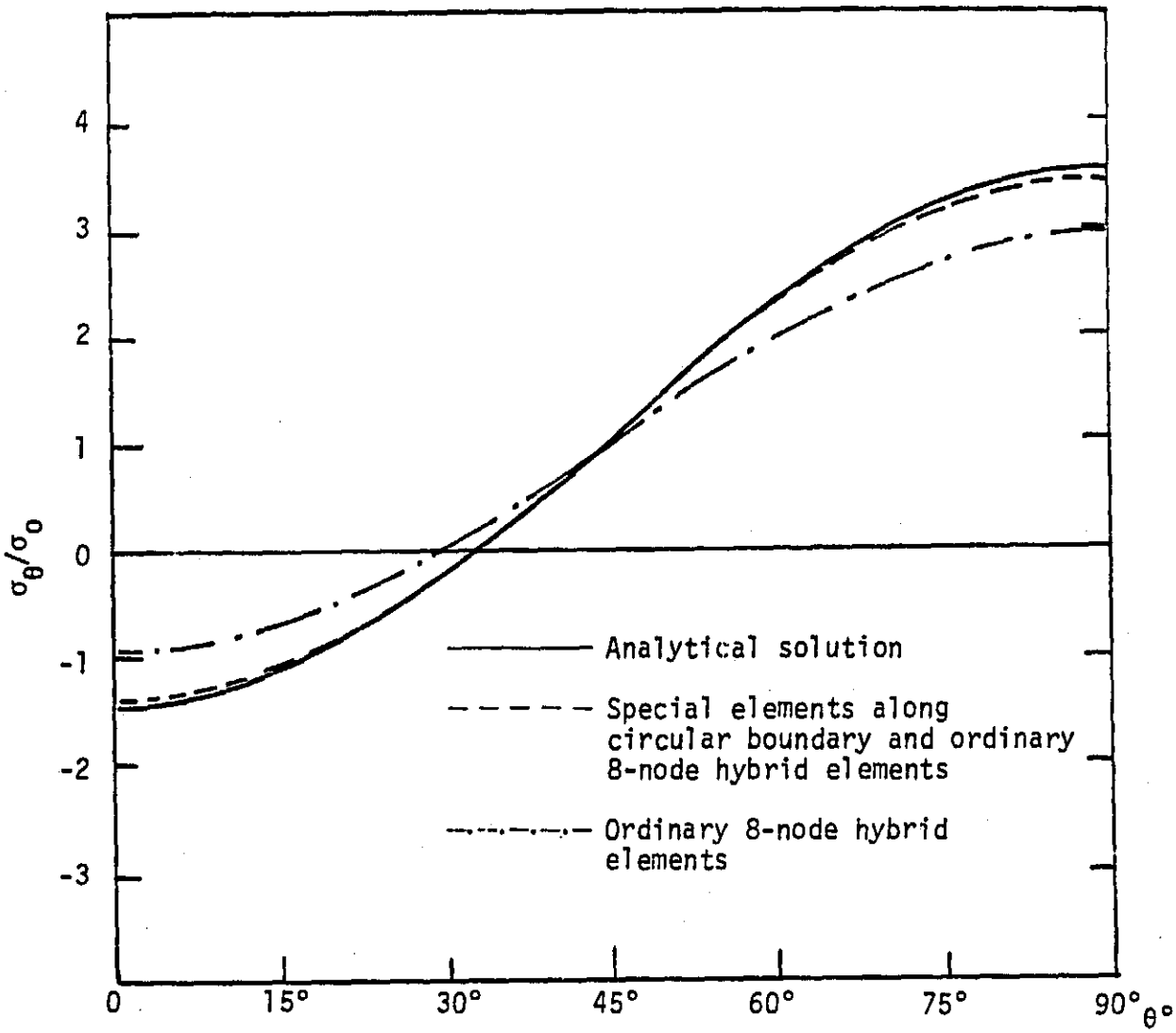

Figure A-5 Thin square plate with circular hole under uniform tension stress σ_0 circumferential stress σ_θ obtained by fine-mesh solution

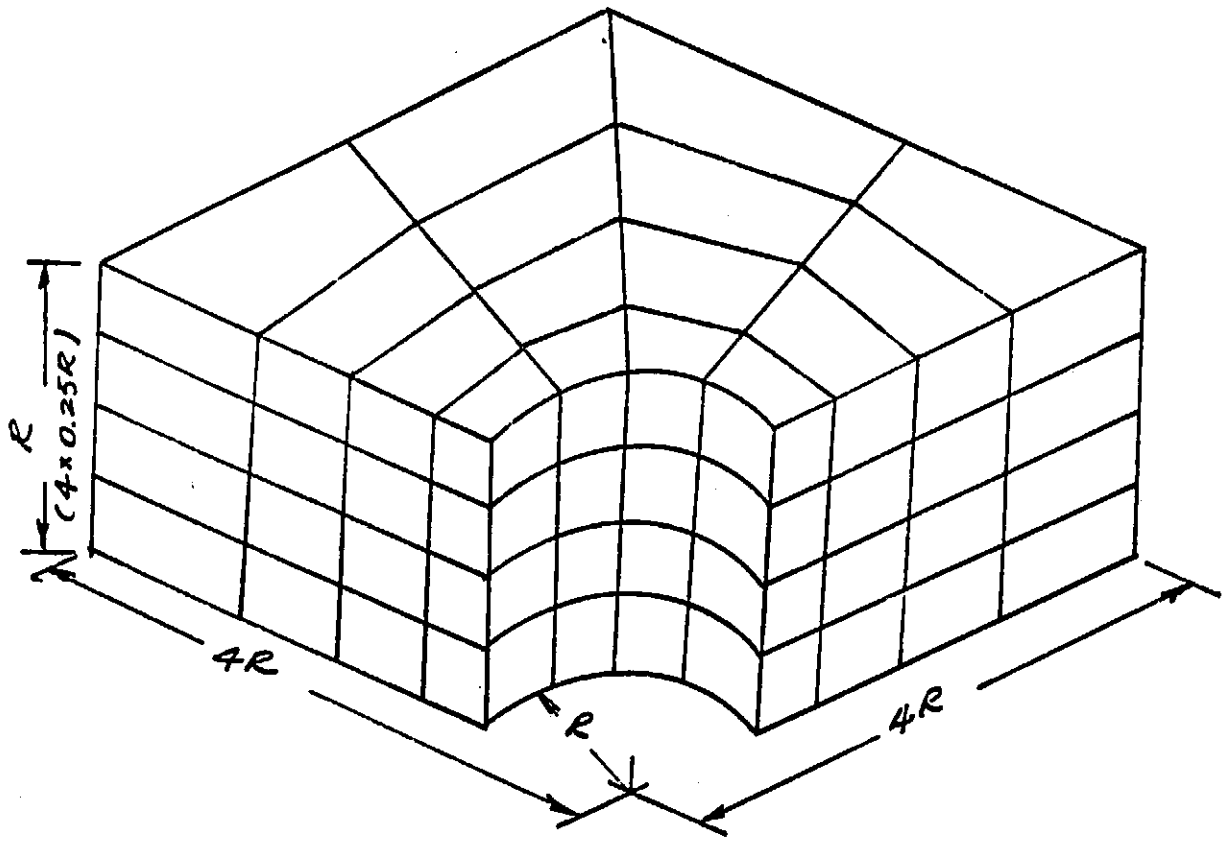

Figure A-6 Thick block with circular hole under uniform tensile load — mesh pattern for one-eight of block