General Disclaimer

One or more of the Following Statements may affect this Document

- This document has been reproduced from the best copy furnished by the organizational source. It is being released in the interest of making available as much information as possible.

- This document may contain data, which exceeds the sheet parameters. It was furnished in this condition by the organizational source and is the best copy available.

- This document may contain tone-on-tone or color graphs, charts and/or pictures, which have been reproduced in black and white.

- This document is paginated as submitted by the original source.

- Portions of this document are not fully legible due to the historical nature of some of the material. However, it is the best reproduction available from the original submission.

Produced by the NASA Center for Aerospace Information (CASI)

Contract NAS8-35499
MCR-85-1308

Phase II
Final Report

February 1985

Selected Tether Applications in Space

(NASA-CR-171422) SELECTED TETHER APPLICATIONS IN SPACE: PHASE 2 Final Report (Martin Marietta Corp.) 138 p HC A07/MF A01 CSCL 22B
N85-22463
Unclas
G2/15 20176

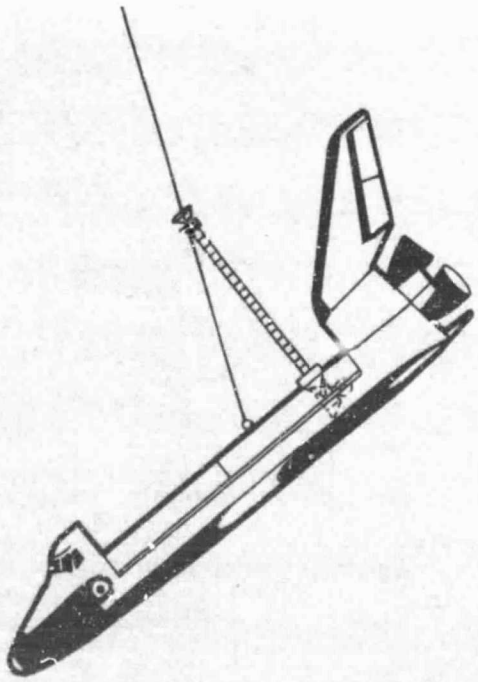

MARTIN MARIETTA

FINAL STUDY REPORT

PHASE II STUDY OF SELECTED TETHER APPLICATIONS IN SPACE

CONTRACT NAS8-35499

FEBRUARY 1985

PERFORMED BY

MARTIN MARIETTA AEROSPACE
DENVER DIVISION

FOR

MARSHALL SPACE FLIGHT CENTER
HUNTSVILLE, ALABAMA

FOREWORD

This Final Study Report is submitted in accordance with the requirements of Contract NAS8-35499, Statement of Work paragraph 6.5, and Data Requirement DR-4. The study was performed under the technical direction of James K. Harrison, Contracting Officers Representative.

The study was performed by the Space Systems Division of Martin Marietta Aerospace, Denver Division under Mr. Morris H. Thorsen, and in the Spacecraft Systems Product Area under Mr. Lester J. Lippy.

The Study Manager was Mr. William Nobles. Mr. Jack Van Pelt was responsible for the comparison analysis task.

Technical consultation was provided by Mr. Joseph Carroll, Research and Consulting Services, under subcontract to Martin Marietta.

Areas of the study dealing with tether transportation applications benefited from the studies performed by Professor Manual Martinez - Sanchez, Sarah Ann Gavit, and Dale Stuart of the Space Systems Laboratory of the Massachusetts Institute of Technology.

Insight into the behavior of tethered platforms was gained from the studies on tethered constellations performed by Dr. Enrico Lorenzini and his co-investigators, Mr. David Arnold, Mr. Jack Slowey and Dr. Mario Grossi. This work was performed at the Astrophysical Observatory of the Smithsonian Institute.

TABLE OF CONTENTS

		PAGE
FOREWORD		i
LIST OF ABBREVIATIONS		vii
1.0	INTRODUCTION AND OVERVIEW	1
1.1	Concept Development Activities	1
1.2	Concept Compatibility	3
1.3	Compatibility/Conflict Considerations	6
1.4	Benefits Assessment	7
1.5	Tether Rendezvous System	7
1.6	Tether Deployer Systems	8
2.0	SELECTED CONCEPTS ANALYSES AND ASSESSMENTS	9
2.1	Concept A2 - The Tethered Deorbit of Shuttle from Space Station	10
2.1.1	Tether Recoil Characteristics	12
2.1.2	Deployment and Retrieval Energy Considerations	13
2.1.3	System Concept	15
2.2	Concept F - The Tether Assisted Launch of an OTV Mission	15
2.2.1	Requirements Commonality with Concept A2	15
2.2.2	Reel Size and Design Concept	17
2.2.3	Payload Interface Deployment Module (PIDM)	17
2.3	Concept E2 - An Electrodynamic Tether Auxiliary Power System for Space Station	18
2.3.1	System Design Requirements	19
2.3.2	Tether Power Dissipation	19
2.3.3	System Efficiency	20
2.3.4	System Power Levels	24
2.3.5	Conductor Mass	24
2.3.6	Tether Length Determination	26
2.3.7	Tether Voltage Considerations	28
2.3.8	Current Considerations	29
2.3.9	Electrical Potential Considerations	30
2.3.10	Tether Construction	32
2.3.11	Tether Temperature	33
2.3.12	Cross Track Libration Effects	34
2.3.13	Tether System Characteristics	36
2.4	Tethered Platform from Space Station - Concept C	36

TABLE OF CONTENTS (CONTINUED)

		PAGE
2.5	Tether Mediated Rendezvous of an Orbital Maneuvering Vehicle with an Orbital Transfer Vehicle - Concept D ...	36
2.6	AXAF Servicing and Tether Reboost - Concept B2	37
3.0	COMPARISON WITH ALTERNATE CONCEPTS	38
3.1	Comparison Criteria	38
3.1.1	Mission Model Analysis	38
3.1.2	Tether Deployment Considerations	39
3.1.3	Performance Characteristics	43
3.1.3.1	STS Performance	43
3.1.3.2	OMV and OTV Performance	48
3.1.3.3	Space Station Performance	56
3.2	Comparison Format	58
3.3	Comparison Results	58
3.3.1	Tether Assisted Deployment of 220 klb Shuttle from the Space Station - Maximum Mass Deployment Case - Concept A2	58
3.3.2	Tether Assisted Launch of 20,000 lb Payload to Geosynchronous Orbit - Concept F	61
3.3.3	Placement of 20,000 lb AXAF Into 320 nmi Orbit Via Orbiter - Concept B1	64
3.3.4	Retrieval of 20,000 lb AXAF from 205 nmi Circular Orbit for Maintenance and Reboost to 320 nmi - Concept B2	66
3.3.5	Tethered OMV Rendezvous and Retrieval of OTV Returning from a Geosynchronous Mission - Concept D	69
3.4	Benefits Analysis	72
4.0	TETHER DEPLOYMENT SYSTEMS	78
4.1	Deployment System Categories	78
4.2	System Performance Requirements for a Tether Deployment System for Space Station	79

TABLE OF CONTENTS (CONTINUED)

			PAGE
	4.2.1	Reference Mass	80
	4.2.2	Reference Altitude(s)	80
	4.2.3	Tether Lengths/Tensions	80
	4.2.4	Shuttle Interface Deployment Module (SIDM)	80
	4.2.5	Payload Interface Deployment Module (PIDM)	81
	4.2.6	Deployment and Retrieval Energies	82
	4.2.7	Tension Alignment Assemblies	83
	4.2.8	Tether Reel Assembly(s)	83
4.3		Design Concept for a Dual Mode Tether Deployment System for Space Station	83
4.4		Performance Requirements for a Tether Deployment System for Shuttle	105
	4.4.1	General Requirements	105
	4.4.2	Payload Interface Deployment Module (PIDM)	105
	4.4.3	Extendable Deployment Boom	106
	4.4.4	Reel Drive System	106
4.5		Tether Deployment System for Shuttle Payloads	107
	4.5.1	Payload Deployment Constraints	107
	4.5.2	Deployer Design Concept	107
	4.5.3	Operations Sequence	112
5.0		CONCEPT TECHNICAL ISSUES	116
5.1		Concepts A2 and F	116
5.2		Concept E2	116
5.3		Concept B	117
5.4		Concept C	117
5.5		Concept D	117
6.0		CONCEPT TECHNOLOGY DEVELOPMENT NEEDS	118
6.1		Concepts A2 and F	118
6.2		Concept E2	118
6.3		Concept B	119
6.4		Concept C	119
6.5		Concept D	119
7.0		CONCLUSIONS	120
8.0		RECOMMENDATIONS	122
APPENDIX A		EQUATIONS AND REFERENCES USED FOR DETERMINATION OF PROPELLANT REQUIREMENTS	A-0

LIST OF ILLUSTRATIONS

FIGURE	TITLE	PAGE
2-1	Dual Mode Tether Deployment System Installed on Space Station	14
2-2	Tether Deorbit of Shuttle from Space Station	16
2-3	OTV Tether Launch Assist	16
2-4	Load Power as a Function of K_T	21
2-5	System Efficiency as a Function of K_T and Tether Voltage	21
2-6	Reboost Propellant Required as a Function of I_{SP}	25
2-7	Mass to Power Relationship for an Aluminum Tether	25
2-8	Tether Tension Constraint	27
2-9	Tether Angle Relationships	27
2-10	Potential Map for an Electrodynamic Tether System	31
2-11	Tether Construction Using a Bunch Stranding	31
2-12	Variation with Time for Cross Track Component of Tether Force	35
3-1	Tether Transportation Principles	42
3-2	Shuttle OMS Direct Insertion Delta V Requirements	45
3-3	Shuttle OMS Deorbit Delta V Requirements	45
3-4	Shuttle OMS Propellant Requirements/Savings	49
3-5	OMV Propellant Requirements for Mission Set	54
3-6	OMV Propellant Savings from Tether Launches	54
3-7	OTV Propellant Requirements for Mission Set	55
3-8	OTV Propellant Savings from Tether Launches	55
3-9	Potential Space Station Quarterly Altitude Losses	73
3-10	Shuttle Quarterly Tether Deployment Requirements to Maintain Space Station Altitude	75
3-11	Potential Yearly Benefits from Space Station Tether Operations	76
4-1	Space Station with Dual Mode Tether Deployment System	85
4-2a	Tether Reel System Installation	88
4-2b	Tether Reel System Installation	89
4-3	Tether Splice Fitting	90
4-4a	Shuttle Tether Deployment System	92
4-4b	Shuttle Tether Deployment System	93
4-5	Space Station/Shuttle Attitude During Deployment	94
4-6a	Shuttle Interface Deployment Module (SIDM)	96
4-6b	Shuttle Interface Deployment Module (SIDM)	97
4-7	SIDM/Shuttle Release Mechanism	100
4-8	Shuttle Release Mechanism Sequences	101
4-9	Manual Release Sequence for Shuttle Release Mechanism	102
4-10	OTV Tether Deployment System	104
4-11	Deployed Payload Mass Versus Tether Length	108
4-12a	Tether Deployer System for Shuttle	110
4-12b	Tether Deployer System for Shuttle	111
4-13a	Shuttle Payload Deployment (Stage 1)	114
4-13b	Shuttle Payload Deployment (Stage 2)	114
4-13c	Shuttle Payload Deployment (Stage 3)	115

LIST OF TABLES

TABLE	TITLE	PAGE
1-1	Compatibility Matrix for Space Station Tether Applications	4
3-1	Tethered OMV Candidate at Space Station	40
3-2	Tethered OTV Launch Candidates at Space Station	40
3-3	Basic Tether Equations	42
3-4	Orbiter Initial Weight Determination	47
3-5	OMV and OTV Considerations	51
3-6	OMV and OTV Estimated Vehicle Characteristics	52
3-7	OMV and OTV Performance Characteristics	52
3-8	Space Station Ground Rules	57
3-9	Space Station Orbit Maintenance Requirements	57
3-10	Comparison of Concept A2 with Baseline Approach	59
3-11	Comparison of Concept F with Baseline Approach	62
3-12	Comparison of Concept B1 with Baseline Approach	65
3-13	Comparison of Concept B2 with Baseline Approach	67
3-14	Comparison of Concept D with Baseline Approach	70
3-15	Potential Benefits from Space Station Tether Applications	76

LIST OF ABBREVIATIONS

ACC	-	Aft Cargo Carrier
ASE	-	Aerospace support equipment
AXAF	-	Advanced X-Ray Astrophysical Facility
COR	-	Contracting Officers Representative
Delta V, ΔV	-	Maneuver velocity increment
ET	-	External Tank
ETR	-	Eastern Test Range
EVA	-	Extra vehicular activity
fps	-	Feet per second
GEO	-	Geosynchronous equatorial orbit
I_{sp}	-	Propellant specific impulse (sec)
LH_2	-	Liquid Hydrogen (cryogenic fuel)
LO_2, LOX	-	Liquid Oxygen (cryongenic fuel)
MECO	-	Main Engine Cutoff
MMH	-	Monomethyl hydrazine, (storable propellant fuel)
MPAD	-	Mission Planning Analysis Division (JSC)
MPS	-	Main Propulsion System (STS)
$MR^2\Omega$	-	Angular momentum
N_2	-	Nitrogen (gas)
$N_2 H_4$	-	Hydrazine (storable monopropellant)
$N_2 O_4$	-	Nitrogen Tetroxide (storable bipropellant oxidizer)
nmi	-	Nautical mile (6076 feet)
OMS	-	Orbital Maneuvering System (Shuttle)
OMV	-	Orbital Maneuvering Vehicle
OTV	-	Orbital Transfer Vehicle
PIDM	-	Payload Interface Deployment Module (tether system)
psf	-	Pounds per square foot
Q(max)	-	Maximum dynamic pressure during atmospheric ascent trajectory
RCS	-	Reaction Control System
SIDM	-	Shuttle Interface Deployment Module (tether system)
STAIS	-	Selected Tether Applications in Space (study)
STS	-	Space Transportation System
TOMV	-	Tethered Orbital Maneuvering Vehicle
TSS	-	Tethered Satellite System
W_{pu}	-	Weight of useable propellant

1.0 INTRODUCTION AND OVERVIEW

This report covers the results from study Phases I and II of a planned five phase study of selected tether applications in space. During Phase I a large number (26+) of application concepts were examined and five were selected for more detailed development and evaluation. The criteria used for selection were:

- Variety of applications
- Near term applicability
- Potential benefits
- Feasibility/practicality

The five selected concepts were developed to identify operational characteristics, performance levels and limitations, operational considerations, safety considerations, and technical issues requiring further study. These developed concepts were documented in the final report for the Phase I study. These concepts as described in the Phase I Final Report provided a baseline for the Phase II study effort.

The five tether application concepts selected for study were:

A. Tether de-orbit of Shuttle from Space Station
B. Orbit insertion of a spacecraft (AXAF) from Shuttle
C. Tether deployment of an operational platform from Space Station
D. Tether effected rendezvous of an Orbital Manuevering Vehicle with a returning Orbital Transfer Vehicle.
E. An electrodynamic tether used in a dual motor/generator mode as an energy storage method for Space Station.

1.1 Concept Development Activities

Based on the information developed and the insight gained during the Phase I studies, Concepts A, B, and E were significantly revised and an additional new Concept F was developed during Phase II.

Concept A2 is the designation used for the revised version of the shuttle deorbit. This revision was made to incorporate new data on the projected Space Station characteristics and to remedy certain problems with the original concept. The significant changes were a shorter tether, due to the significantly increased mass of the Space Station, and a revision in the concept for the Shuttle Interface Deployment Module (SIDM). The original Concept A required a bridge beam to be installed in the Shuttle cargo bay to serve as the tether attachment interface. This bridge beam had to be brought up into orbit each time it was to be used and it interfered with return cargo capabilities. Concept A2 was modified to attach to the Shuttle sills such that the interface scar weight penality is significantly reduced and there is no interference with return cargo. The most significant

aspect of the revised concept is the addition of a provision to scavenge the propellant from the Shuttle which is no longer needed due to the tether deorbit. This Orbit Maneuvering System (OMS) propellant must be retained on board the Shuttle for the contingency of an aborted tether deorbit. However, for each increment of tether deorbit successfully accomplished, the amount of propellant needed is reduced. The ratio is approximately 100 pounds of OMS bipropellant per kilometer of tether deployment. For the full range deployment of 65 kilometers of tether, 6500 pounds of propellants is no longer required. This consideration led to the incorporation of a propellant scavenging system into the SIDM. This feature allows the propellant to be transferred from the Shuttle as it becomes surplus and then retrieved by the tether to the Space Station for use in resupply of the Orbital Maneuvering Vehicle (OMV).

This propellant scavenging feature greatly increases the overall benefits of the tether deorbit for Shuttle and is considered to be one of the significant results of this study. A new technology report has been filed to describe the concept in more detail.

Concept F consists of a tether assisted launch of an Orbital Transfer Vehicle (OTV) mission to geosynchronous orbit from Space Station. The reason for adding Concept F was the realization gained from the analysis of Concept A that the tethered deorbit of the Shuttle must be coupled with another tether application concept which would in turn, make use of the angular momentum transferred to the Space Station by the Shuttle deorbit operation. Otherwise, the number of deorbit operations which could be performed would be severely limited by the unacceptable increase in Space Station altitude. A survey of potential applications which could act as such a user of angular momentum identified the OTV launch assist operation as the only viable tether transportation candidate to serve as the angular momentum counter balance to the Shuttle deorbit operations.

Concept B2 is a variation on the original Concept B which used a Shuttle mounted tether system for orbit insertion of the AXAF observatory spacecraft into its operational orbit. The Phase I analysis indicated that the concept did not provide any significant performance advantages over the baseline concept of direct insertion by Shuttle. B2 was developed to consider the servicing mission for AXAF which requires rendezvous of the Shuttle with the AXAF spacecraft at 205 nautical mile altitude, refurbishment on orbit and then use of a tether system to perform reinsertion of AXAF to 320 nautical miles for a second 3 year operational interval.

Concepts C and D were not significantly modified from Phase I.

Concept E2 is a significantly revised concept from the Phase I Concept E. Concept E used the electrodynamic tether as a two-way conversion device between orbital mechanical energy and electrical energy. The purpose was to provide a method of energy storage to sustain the Space Station power system during solar eclipse intervals. The basic source of the energy was solar array power.

The new Concept E2 uses the electrodynamic tether only in the generator mode (converting orbital mechanical energy into electrical power). The orbital mechanical energy is derived from the tether deorbit of Shuttle (Concept A2). This concept can provide an alternative method of using the angular momentum scavenged by the tether deorbit of Shuttle.

These concepts are discussed in more detail in 2.0.

1.1.1 Concepts Baseline for Phase II

The concepts baseline for the Phase II study which incorporates the concept development activities performed under study task I is listed below.

Concept A2	-	Tether Deorbit of Shuttle from Space Station. (Major revision from Phase I)
Concept B	-	Tethered Orbit Insertion of a Spacecraft from Shuttle, (Same as Phase I)
Concept C	-	Tethered Platform Deployed from Space Station (Same as Phase I)
Concept D	-	Tether Effected Rendezvous of an OMV with a Returning OTV. (Same as Phase I)
Concept E2	-	Electrodynamic Tether as an Auxiliary Power Source for Space Station. (New Concept)
Concept F	-	Tether Assisted Launch of an OTV Mission from Space Station. (New Concept)

1.2 Concept Compatibility

For those concepts involving use on the Space Station an assessment was made of the compatibility.

The results of this assessment are shown in Table 1-1. The categories of compatibility used on the table are:

Y (yes) = Compatible for Use on Space Station
Y*(yes) = Compatible with Shared Use of Tether Deployer System
N (no) = Not Compatible

1.2.1 A2 - Shuttle Deorbit with C - Tethered Platform

These concepts are not compatible because the use of a tethered platform at the upper deployment location would conflict with the use of either of the two identified concepts for using the angular momentum scavenged from the Shuttle deorbit operations (i.e. E2 or F).

Concepts						
A2	Shuttle Deorbit					
C	Tethered Platform	N				
D	Tethered Rendezvous	Y*	Y			
E2	E.D. Tether Power System	Y	N	Y		
F	OTV Launch Assist	Y*	N	Y*	N	
		A2	C	D	E2	F

Y = COMPATIBLE FOR USE ON SPACE STATION
Y* = COMPATIBLE WITH SHARED USE OF TETHER DEPLOYER SYSTEM
N = NOT COMPATIBLE

Table 1-1 Compatibility Matrix for Space Station Tether Application Concepts

1.2.2 A2 - Shuttle Deorbit with D - Tethered Rendezvous

These concepts are compatible because of the intermittent nature of application. They should be also compatible in the shared use of a deployer system on the down end of the Space Station.

1.2.3 A2 - Shuttle Deorbit with E2 - Electrodynamic Power Tether

These concepts are compatible with the Shuttle deployment tether on the down end of the Space Station and the electrodynamic tether on the upper end.

In addition to being compatible, these two concepts form a complementary set in that the Shuttle deorbit imparts angular momentum to the Space Station which the electrodynamic tether in turn converts into electrical power.

1.2.4 A2 - Shuttle Deorbit with F - OTV Launch Assist

These concepts are compatible with the Shuttle deployment system on the down end of the Space Station and the OTV deployment system on the upper end. An approach has been developed for the two concepts to share a common reel system (See 5.0).

As with the preceding set (1.2.3) these two concepts form a complementary set with the OTV launch assist using the angular momentum imparted to the Space Station by the Shuttle deorbit.

1.2.5 C - Tethered Platform with D - Tethered Rendezvous

These concepts are compatible but with no obvious sharing of hardware systems. The platform could be on either top or bottom end of the Space Station as could the tethered rendezvous, but they could not share a location.

1.2.6 C - Tethered Platform with E2 - Electrodynamic Power Tether

These concepts are not compatible because the electrodynamic power system must be coupled with the Shuttle deorbit concept for its source of energy. Also, with the lower end of the Space Station allocated to the Shuttle deorbit, these two would be required to share the top end location and this is not feasible.

1.2.7 C - Tethered Platform with F - OTV Launch Assist

These concepts are not compatible. The logic here is identical to that for 1.2.6 above. The tethered platform and the OTV launch assist would both require a top end location on the Space Station and they are not compatible for colocation because of conflicting operational requirements.

1.2.8 D - Tethered Rendezvous with E2 - Electrodynamic Power Tether

These concepts are compatible for use on the Space Station but not on the same end. If the electrodynamic tether is used it must be on the upper end (See 1.2.3) and the operational requirements are conflicting. However, the tethered rendezvous operations could time share the lower end deployer system.

1.2.9 D - Tethered Rendezvous with F - OTV Launch Assist

These concepts are compatible for use on the Space Station because they are both intermittent in operation. Further they should be compatible with the common use of the top end deployer system.

1.2.10 E2 - Electrodynamic Power Tether with F - OTV Launch Assist

These concepts are not compatible as they both require top end location and they are operationally incompatible for same end location.

This is unfortunate because these two concepts share the capability to productively use the angular momentum scavenged from the Shuttle deorbit operation. This means that one or the other must be selected for the top end location on the Space Station.

1.3 Compatibility/Conflict Considerations

The unfortunate incompatibility between the electrodynamic power tether and the OTV launch assist concepts identified (1.2.10) mean that the two primary methods identified to productively utilize the angular momentum made available by the Shuttle deorbit operation cannot both be used during the same time period. This means that some form of choice must be made between them or a transition made from the electrodynamic power tether to the OTV launch assist at the time the space based OTV comes on line circa 1995.

For the purpose of this study, it has been assumed that the primary choice would be the OTV launch assist concept and a dual mode deployer concept developed in accord with this assumption.

If an alternate choice were to be made, either for the electrodynamic power tether to continue in use with no OTV launch assist, or for a transition scenario where the initial power tether would be decommissioned and the OTV launch assist equipment installed; then the design concept approach for an integrated Space Station tether system installation should be reexamined.

1.4 Benefits Assessment

The developed concepts were analyzed to provide a comparison of their performance with more conventional non-tether methods of accomplishing the same missions. In many cases the alternative methods are not clearly defined and operational performance data is not readily available. A significant portion of effort under the study was dedicated to developing this baseline data base on the performance characteristics of existing and planned space operations systems. This includes Shuttle, OMV, OTV, and Space Station. In addition to the baseline performance characteristics of these systems, it was necessary to identify the impact on their operations characteristics due to the use of tether systems.

Another aspect of the benefits analysis, was the insight gained on the angular momentum balance approach for Space Station. The significance of this was originally pointed out by Ivan Bekey of NASA headquarters staff during the course of the Phase I study. Analysis of the Space Station mission models for OTV and OMV operations was required to provide input data for the angular momentum balance analyses and the benefits assessment.

Comparison criteria were developed for comparing tether applications with alternate methods and a comparison format was developed.

Comparisons were completed for all concepts except for C where data was not available on the operational characteristics of the alternative platform systems, and Concept E2 where there is no clear alternative method to providing such an auxiliary power system.

These comparison studies and benefits assessment results are described in 3.0.

1.5 Tether Rendezvous Systems

The Phase I study identified a concern as to the feasibility of the type of orbital rendezvous required by Concept D. The nature of this rendezvous operation between a free flying spacecraft and a tethered platform must be well understood in order to develop performance and design requirements for hardware systems required.

Difficulties were encountered in accomplishing the orbit trajectory simulations required to better define these system performance requirements. Some limited progress was made in defining variations on the rendezvous procedure which could enhance the probability of successfully accomplishing the operation. However, it was not deemed advisable to proceed with an attempt at hardware definition until an improved understanding of the concept is achieved. The study effort originally allocated to the definition of tether rendezvous hardware under this task was redirected to other tasks.

A further development bearing on this tethered rendezvous concept area was the results from the comparison/benefits analysis task. Based on the most recent information on the mission operations concept for the return of the OTV from geosynchronous orbit to Space Station, there is no performance advantage for the tethered rendezvous concept - even assuming the rendezvous can be successfully accomplished. This reduces the incentive to continue study activities directed at this approach unless some more beneficial versions of tether mediated rendezvous operations can be identified.

1.6 Tether Deployment Systems

The combination of concepts A-2 and F were used as the basis for a dual mode tether deployer system concept compatible with the Space Station.

Concepts B1 and B2 were used as the basis to develop a generalized tether deployer system for Shuttle payloads. This system is a derivative of the Tethered Satellite System hardware.

These systems are described in 4.0.

2.0 SELECTED CONCEPTS ANALYSES AND ASSESSMENTS

In general, the study activities under this task were directed toward the modification of the concepts studied during Phase I. The need for these modifications was based on conclusions reached at the end of the Phase I study, improved insight gained during the study and the availability of new data on operational characteristics of projected space systems.

One new concept was added - Concept F: A tether assisted launch of OTV from Space Station. This concept was needed to act as a user of the angular momentum transferred from the departing Shuttle to the Space Station by the tether deorbit operations of Concept A2. The necessity to correlate these concepts, where one (Concept A) imparts angular momentum to the Space Station and the other (Concept F) extracts it for use in launching another vehicle (OTV mission), is an example of the application of insight gained during the course of the Phase I study.

Concept E2 is a major revision of the electrodynamic tether concept studied in Phase I, and was also based on increased insight gained. Concept E2 is for an electrodynamic tether auxiliary power system, which provides an alternative method (to Concept F) to utilize the angular momentum available from the shuttle deorbit operation by converting it into electrical power for use on the Space Station. This capability to provide auxiliary power at levels up to 75 kW without impacting the baseline power system design would be a valuable adjunct to Space Station capabilities. In addition, use of the concept would enable an ancillary benefit from the scavenging of Shuttle OMS propellant. Additional uses of the tether deorbit capability which could be considered are the deorbit of Space Station waste containers to burn up in the atmosphere, and the deorbit of external tanks which have been brought to the Space Station. These applications have not been developed into concepts because of the inherent limitation on tether deorbit operations set by the capability to use the scavenged angular momentum, and the resulting judgement call that the most beneficial candidate for tether deorbit is the Shuttle. Nevertheless, it should be kept in mind that there is much more angular momentum potentially available to be scavenged. The caveat is that additional concepts must be identified which, in turn, use the angular momentum for further purposes. Conversion of the scavenged angular momentum into electrical power is such a concept.

Unfortunately it does not appear to be feasible to use Concept E2 and F concurrently since they must both be installed on the upper end of the Space Station. While the electrodynamic tether could operate on the lower or nadir end, this location is preempted by the tether deorbit application for Shuttle. The OTV deployer must be on the zenith location, and so, there results the conflict between E2 and F. There is a schedule window of opportunity for the application of E2 prior to the advent of the space based OTV (presently planned for 1995). For the purpose of this study evaluation, it was assumed that the benefits of Concept F would outweigh those of Concept E2 and the benefits analysis was based on this assumption.

Concept B2 is a modification to the mission operations for the concept studied in Phase I. The modification is to perform a refurbishment mission for the Advanced X-ray Astrophysical Facility (AXAF) and then to reinsert it into its operational orbit by means of a tether deployment from Shuttle. The original concept B had been to perform the initial mission insertion to 320 nautical miles by tether as an alternative to a Shuttle direct insertion mission. The justification for this B2 modification to the original concept was to determine if the refurbishment and reboost mission offered any performance benefits in comparison with the planned baseline approach for accomplishing the mission. Neither this modified concept nor the original were found to provide any significant performance benefits. Justification for continuing to develop the Shuttle deployer concept will depend on identification of other orbit insertion applications that require boost to higher altitudes than can be achieved by direct insertion from the Shuttle.

Concept C - A tether deployed operational platform from Space Station - was not modified. An alternative approach to supplying power to the platform by means of a conductive tether was considered as a worthwhile modification to be investigated, however, it was not undertaken during this study phase.

Concept D - A tether deployed OMV used to rendezvous with a returning OTV - was also not modified and the Phase I concept was used for the comparison with alternative methods performed under Task 2. The significant new development with respect to this concept was new information on the baseline mission operations concept for return of the OTV from geosynchronous orbit to the Space Station. Comparison with this baseline approach has brought out the fact that there is no performance benefit for the concept and, hence, no reason to continue with the development of the concept.

2.1 Concept A2 - The Tethered Deorbit of Shuttle From Space Station

The major new development which motivated the modification of the original Phase I Concept A, was the definition of the reference configuration for Space Station. This configuration information was developed to serve as a basis for the Phase B Space Station studies and became available on a timely basis to be used in this study. The new information included significantly increased mass values for the station and configuration layouts which permitted more meaningful concepts as to how such a tether deployer could be integrated into the Space Station.

In addition to this new information some problems had been identified with the Phase I Concept A for which design solutions were developed in A2.

One of these problems was the need to improve the means of attaching the deployment tether to the Shuttle. The original Concept A employed a bridge beam installed into the cargo bay near the Shuttle center-of-mass location. This meant that no return cargo could be installed at that location, thus constraining the return cargo capability of the Shuttle. Also, the bridge beam had to be brought up into orbit for each mission where its use was planned. The design solution was to develop a new Shuttle Interface Deployment Module (SIDM) design which provides clearance for the return payloads and interfaces directly with the Shuttle sills by means of relatively lightweight attachment/release fixtures.

An insight gained from the Phase I study was the recognition of the significant quantity of Shuttle OMS propellant potentially available for scavenging. The problem here is the requirement to have this propellant available on board the Shuttle in the event of an aborted tether deorbit operation. A method concept was developed to provide a propellant transfer/scavenging capability in the new Shuttle Interface Deployment Model (SIDM) design such that the propellant can be transferred into the SIDM as it becomes surplus to the Shuttle requirements with tether deployment. A new technology disclosure report has been submitted describing this concept. A concept drawing of the SIDM incorporating the propellant storage capability is shown in the Space Station tether deployment system described in 4.2.4.

Studies were made to quantify the amount of OMS propellant which could be made available by this approach. The relationship is approximately 100 pounds of propellant for each kilometer of tether deployment of the shuttle. Using a maximum length tether of 65 kilometers allows 6500 pounds to be scavenged per each full deorbit deployment. This is the most significant item in the benefits assessment for this concept as discussed in 3.0.

An operational consequence of this new SIDM design concept is that the requirement to perform the tether deployment with the payload bay doors open is even stronger than for the original concept. This means that the requirement to keep the post release perigee altitude for the Shuttle above 100 nautical miles to avoid an automatic reentry on first perigee pass is still in effect. This is what determines the limit of 64+ kilometers on tether length for Shuttle deorbit.

A second operational consequence is due to the fact that the SIDM no longer fits within the cargo bay envelope, and so, could not be retained for return to earth in event of a broken tether. This puts an increased emphasis on fault tolerant design for the release mechanisms to insure release capability. It also leads to the requirement for an OMV recovery method capability for the SIDM in the event it must be jettisoned. Functional requirements to support such a recovery operation have been included for the SIDM concept.

A third consequence of this SIDM concept is the necessity to install propellant transfer lines into the cargo bay area for those Shuttles intended to be used for the tether deorbit operation. For this study, it has been assumed that such propellant transfer and management technologies will have been developed to support space systems such as OMV and will be available for this application.

This OMS propellant transfer capability provided by the SIDM would provide some attractive ancillary benefits for the Space Station based Shuttle missions. For those Shuttle missions which are volume limited, some or all of the excess payload weight capacity could be used to bring up added OMS propellant thus providing a convenient method of achieving improved payload performance. In addition, the system would provide a capability to off-load mission contingency reserves of propellant as the need for these reserves is reduced near the end of a mission. In the reverse sense, such system would provide an on-orbit capability to replenish the Shuttle propellant in the event of unanticipated mission requirements. The SIDM would provide this two way propellant transfer capability.

There is an obvious requirement for the SIDM to interface with the propellant storage depot on the Space Station in order to perform the propellant transfer operations described above. Because of lack of information on the location and design details of this propellant depot, no attempt was made to define the interface requirements or operational procedures to transfer propellant from the SIDM to the depot or vice-versa.

A fourth consequence of the new SIDM concept is an increase in the amount of energy required to perform the post release retrieval operation for the tether and SIDM. The structural mass of the SIDM is increased as well as the added mass of propellant to be retrieved. Using an estimated mass for the SIDM of 3000 pounds, 6500 pounds of OMS propellant and 65 kilometers of tether at 163 pounds per nautical mile (40 kg/km) gives a retrieval energy requirement of 11 kWh.

The energy generated during deployment remains approximately the same as for the earlier concept. While the length of the tether has decreased by about 11 km, the mass of the orbiter has been increased to 220,000 pounds to account for return payload. The energy generated during the deployment is 155 kWh.

2.1.1 Tether Recoil Characteristics

One of the technical issues identified during the Phase I study was the nature of the tether recoil process subsequent to release or to an accidental sever of the tether by debris. Preliminary simulation indicated a possibility that the portion of the tether adjacent to the station would recoil up past the station on the aft end and then fall back down under the influence of gravity gradient forces.

An unsuccessful attempt was made to carry out an improved simulation of this tether release process to give improved resolution in the vicinity of the station. Our distributed mass tether simulation model (ORBNET) in its present formulation does not have the capability to perform the needed recoil simulations.

This question of tether recoil behavior remains as one of the key technical issues for those tether transportation applications which involve the release of a tethered body under conditions of significant tension in the tether. A simulation capability is needed to be able to predict with confidence the detailed nature of the recoil dynamics and, in particular, the behavior of the recoiling tether in the vicinity of the tether deployment platform. The simulation should also include the capability to study effects due to viscoelastic characteristics of the tether material and auxiliary damping effects due to core and jacketing materials. Such a simulation would permit the performance evaluation of alternative tether materials such as graphite or boron fibers to determine possible advantages of these materials.

Methods of attenuating the release process to mitigate the recoil effects were considered, but they would still leave the problem that the severed tether case must also be accommodated. This means that the design solution to the tether recoil problem should be sought in the design of the tether itself. This could result in some form of composite construction which includes the basic tension element, a jacketing material optimized for abrasion and environmental resistance, and a recoil damping material.

These related areas of tether recoil simulation and tether construction are recommended for further study effort in order to support the development of tether transportation applications.

2.1.2 Deployment and Retrieval Energy Considerations

The quantity of energy generated during the deployment of the shuttle (153 kWh) and the smaller, but still significant (11 kWh), amount required to accomplish retrieval of the tether and propellant loaded SIDM are a fruitful area for innovative engineering solution. The tether reel drive and braking functions are performed by means of a motor/generator drive unit. The energy developed by the system during the deployment process appears as electrical power. For purpose of this study, it has been assumed the deployment generated energy would be rejected to space as waste thermal energy by a resistive load bank which functions as a dedicated high temperature radiator. Subsequently, during the retrieval of the tether the retrieval energy required would be supplied from the Space Station power system.

In the case of Concept F for the tether assisted launch of an OTV mission, the deployment and retrieval energies are even larger than for the Shuttle deorbit.

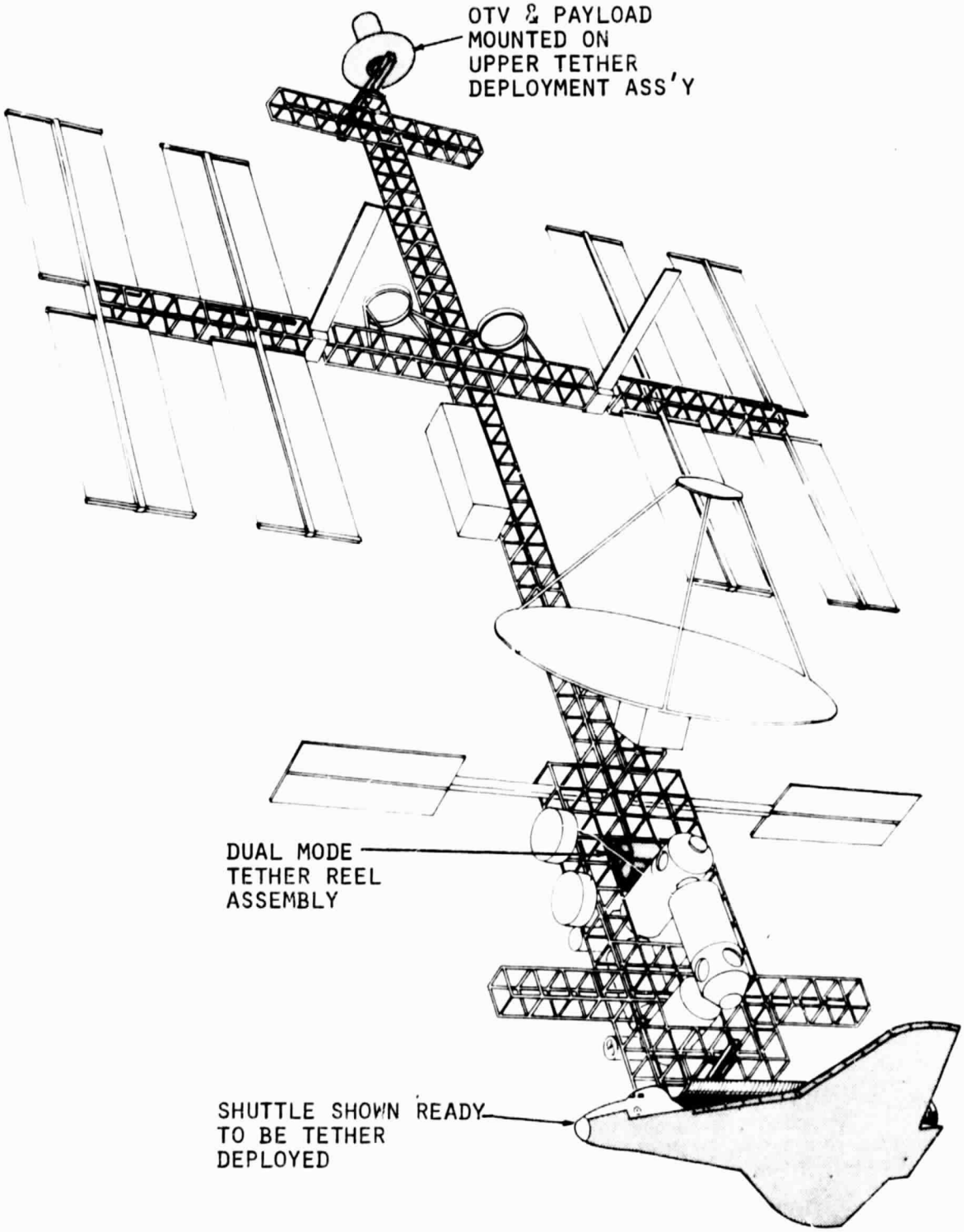

Figure 2-1 Dual Mode Tether Deployment System Installed on Space Station

In order to enhance the overall efficiency of these transportation applications, improved concepts are needed for the utilization and/or storage of the energies involved in the operations. This may be an area where the flywheel energy storage concept could be applied. This is another area recommended for follow-on study.

2.1.3 System Concept

Concept A2 has been developed in a complementary relationship with Concept F and is treated in 2.2. The resulting deployment system is used as the basis for a Space Station deployment system treated in 4.0. The resulting dual mode system is shown installed into the current Space Station reference configuration structure in Figure 2-1. The Shuttle is shown in position just prior to release from the Space Station. Figure 2-2 shows the post release configuration of the Shuttle tethered deployment operation. The SIDM is shown installed on the Shuttle with the OMS scavenging propellant tanks indicated. The tether tension alignment boom and carriage are shown on the lower portion of the Space Station. More detailed illustrations of these hardware elements are given in 4.0.

2.2 Concept F - The Tether Assisted Launch of an OTV Mission

The development of this new concept during the Phase II study was motivated by the results of the angular momentum balance approach to the transportation application area. Analysis indicated that the outstanding candidate concept to be considered in the role of a user mission for the scavenged angular momentum is the OTV mission launch assist. Figure 2-3 shows the OTV with payload being deployed upward.

2.2.1 Requirements Commonality with Concept A2

Because of the correlated relationship with Concept A2, requirements for the two concepts were examined for areas of commonality.

In considering tether tension, it was noted that a deployment length of 150 kilometers for the maximum weight OTV missions would result in approximately an equivalent tension to that for the Shuttle deorbit (Concept A2). This would allow a common design solution in the areas of tether construction, to reel drive systems, and to tension alignment systems. The only significant differences would be in the amount of reel tether storage volume required, in the amount of energy generated during deployment and the amount of energy required for retrieval.

The deployment energy generated by the maximum weight OTV mission stack is 366 kWh and the energy required for retrieval is 29 kWh. The OTV deployment energy generated and the length of time designated for the deployment operation are the factors which size the motor/generator drive system for the reel. Using our guideline of 8 hours for deployment results in an average power output from the reel braking operation of 46 kW or 62 hp. Reserve capability would indicate a rating of 70 hp will be required for the drive motor.

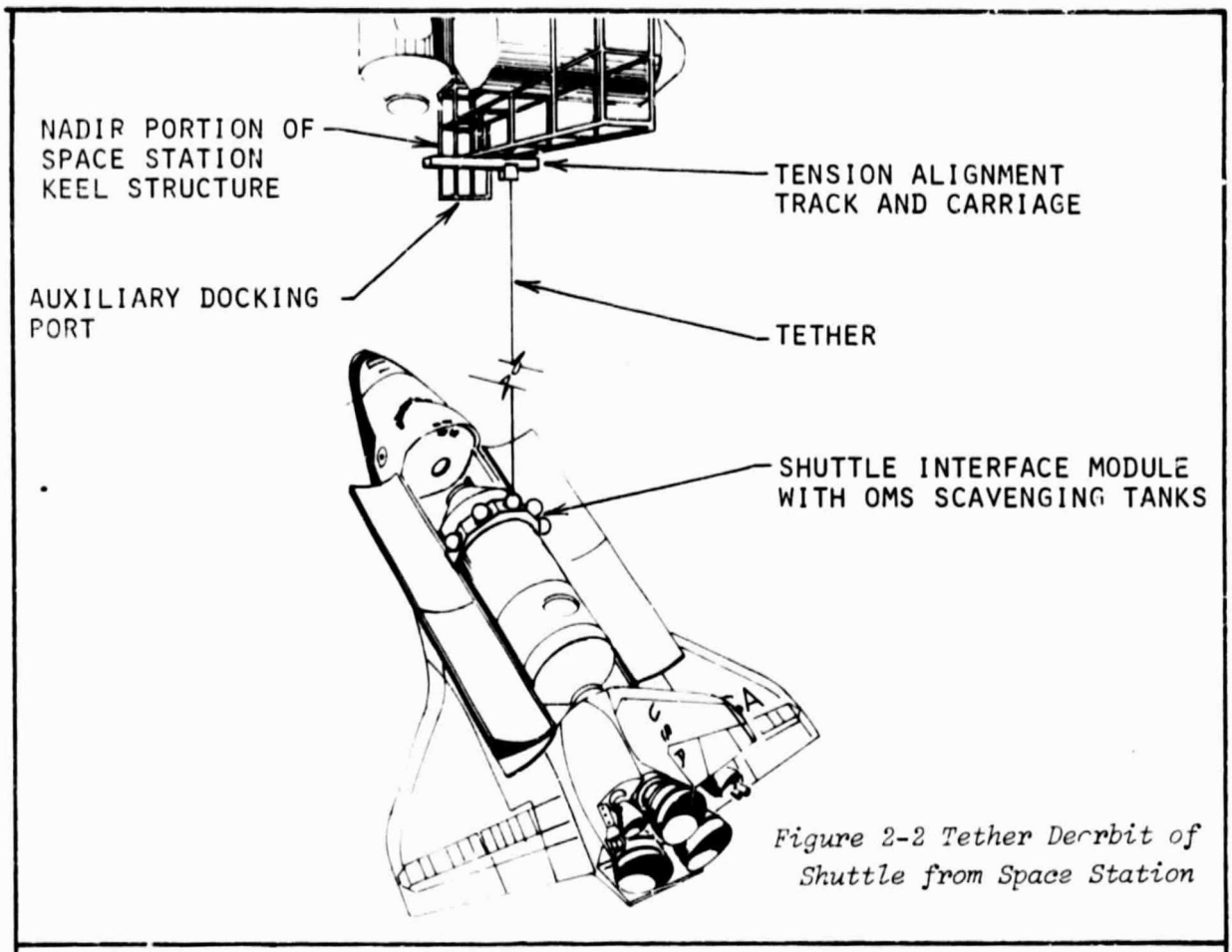

Figure 2-2 Tether Deorbit of Shuttle from Space Station

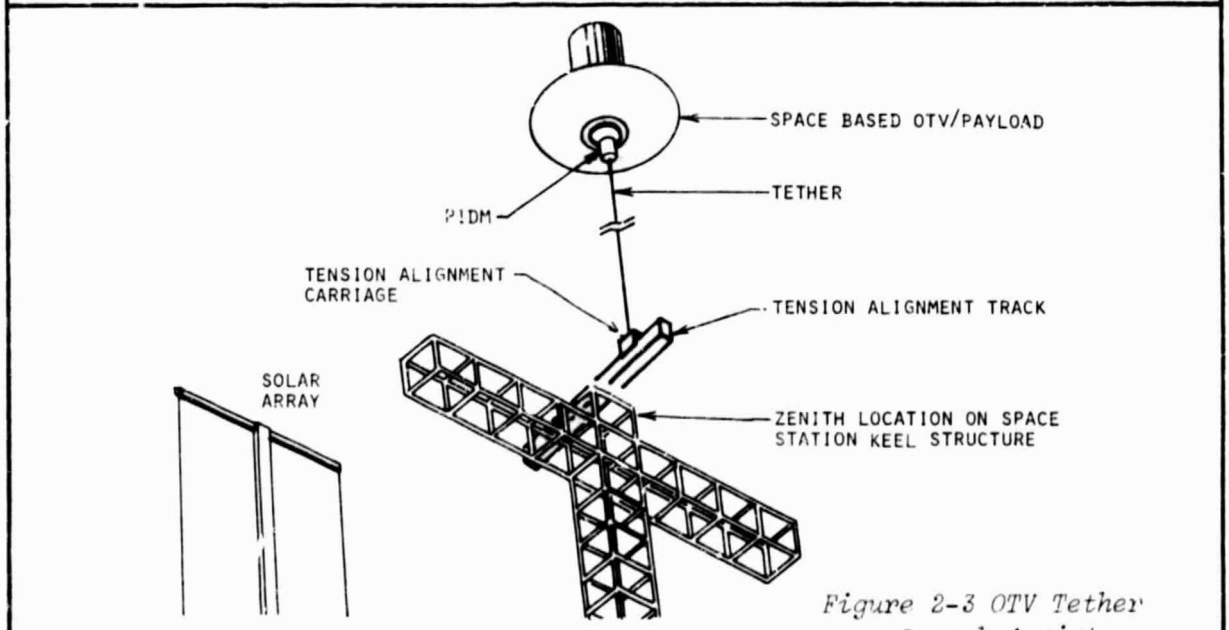

Figure 2-3 OTV Tether Launch Assist

If operational considerations lead to a requirement for shorter deployment time than 8 hours, the reel drive braking motor will need to be correspondingly increased in size to accommodate the higher power levels. The high temperature radiator will also require uprating.

2.2.2 Reel Size and Design Concept

Assuming a tether diameter of 0.400 inch (0.01) and a length of 150 km, the estimated reel size is 3 meters long and 2.5 meters in outer diameter with a hub diameter of 0.3 meters. These are the inside dimensions of the reel. Such a reel would mount in a transverse orientation in the Shuttle cargo bay for launch to orbit. The approximate weight of the tether is 6300 kg. This includes a 5% excess length over the 150 km.

The reel is to be designed as a replaceable modular assembly such that when the tether has reached the end of its service life, the tether loaded reel can be replaced as a unit and the worn out unit returned to the earth. An alternative possibility for disposing of the worn out tether would be to deploy the full length (150 + km) of the tether in a downward direction and release it at the reel end for re-entry and burn-up in the atmosphere. It would still be necessary to return the now empty reel for reloading on the ground and retransport to orbit.

2.2.3 Payload Interface Deployment Module (PIDM)

The PIDM must be capable of meeting the deployment tension loads at the grapple interface with the OTV mission stack and then releasing under remote control from the Space Station. The attachment location of the PIDM to the OTV is yet to be determined. For purposes of developing this concept it has been assumed that the attachment interface would be located in the vicinity of the OTV engine and in line with the longitudinal thrust axis of the stack. This would keep the tension loads during deployment aligned in the same direction (but opposite sign) as the propulsive thrust loads from the OTV. This location for the attach interface would require that the OTV mission stack rotate through a 90° angle after release and prior to initiating the first burn. Ideally this initial burn should be centered on the orbit perigee to provide maximum efficiency. For this tether case, the tether release point becomes the perigee of the new orbit subsequent to release, and the initiation of the burn must be still further delayed while the stack is rotated through 90° (about a transverse axis) and then stabilized. The performance penalties for this delay need to be quantified to determine if they are acceptable. One alternative which could be considered it to delay the burn until the subsequent perigee pass of the new orbit.

Other attachment locations on the side of the stack were considered, however, they also have associated problems. While the OTV could be kept in a proper orientation for burn initiation, the variation in payload characteristics from mission to mission would require adjustment in the location of the grapple fixture for each mission. In addition, the deployment operation would present a significantly different orientation of the tether tension induced load paths in the stack.

This area of the attachment interface of the PIDM to the OTV stack needs further analysis and joint consideration with the OTV definition study teams to resolve an optimum attachment method and location.

Other functional requirements for the PIDM are given in 5.4.2.

The tether deployment of the OTV stack from Space Station is shown in Figure 2-3.

2.3 Concept E2 - An Electrodynamic Tether Auxiliary Power System for Space Station

Electrodynamic tether systems can be considered for a variety of performance objectives. This includes (1) Use of the tether to convert electrical power into thrust for orbit boosting, (2) The two way conversion from electrical energy to orbital mechanical energy and vice-versa which provides a method to use the orbital energy as an energy storage medium and (3) The use of the tether as an auxiliary power system which converts orbital mechanical energy into electrical energy in a single mode. The Concept E studied during Phase I was the dual mode energy storage concept.

The results from the Phase I study indicated some fundamental difficulties with the dual mode energy storage concept. The most telling was the realization that the system would always require a full scale back up of conventional design for contingency situations. In addition the mode switching transition of the tether which must occur twice per orbit will significantly reduce the operational fraction of the orbit period that can be devoted to either the thrusting or generating mode.

The new insight gained from the Phase I study led to the realization that an electrodynamic tether auxiliary power system could provide a method to beneficially use the angular momentum available to be scavenged from the shuttle deorbit by converting it to electrical energy for use on the station.

Assumptions were made as to the practical sizing of such a system and a system design logic sequence developed. These assumptions and logic steps are described in the following paragraphs and the resulting tether described. It should be kept in mind that this is an example and that selecting other design requirements such as power level or overall system efficiency will result in variations on the tether design. The intent during this study has been to develop a design approach for the tether power system, and to apply it to develop a typical example.

2.3.1 System Design Requirements

The system design requirements selected for use in developing the concept are as follows:

1. Deliver 25 kW of conditioned power to the Space Station power bus on a full time duty cycle.

2. No more than 5% of system power to be dissipated in the tether.

3. Capable of operating at a reserve power level of up to 75 kW delivered to the Space Station bus. (Power loss in the tether will increase during reserve power operating intervals)

4. Tether angles with respect to the vertical are not to exceed 0.1 radian at maximum (75 kw) reserve power levels.

A mass of 250,000 kg was assumed for the Space Station and an end mass for the tether system of 500 kg.

2.3.2 Tether Power Dissipation

The fraction of total system power dissipated in the tether is determined by the ratio of tether resistance to the total resistance in the circuit. This includes the net resistance of the ionospheric current path, the contact resistances of the tether ends to the ionosphere, the resistance of the station power processing circuitry and the resistance of the tether.

This ratio has been designated K_T, with the defining relationship:

$$K_T = R_T/R,$$

Where R_T is the resistance of the tether and R is the total resistance of the circuit.

Treating the tether power system as a direct current system, the value for K_T also defines the ratio of power in the tether to total system power.

$$K_T = P_T/P_S$$

Where P_T is the power dissipated in the tether and P_S is the total system power.

A simplified circuit for a tether of resistance R_T and induced voltage E_T in series with a load resistance R_L is shown in Figure 2-4. This plot shows the changing ratio of power in the load, P_L, to total system power, P_S, as K_T is varied. At the point where the values of R_T and R_L are equal, the value of K_T is 0.5 and R/R_T is 2. This is the impedance match condition for maximum power in the load for a given tether. This is shown by the lower curve P_L with maximum value of 0.25 at $R/R_T = 2$. The value for P_S at this point is 0.5 of the short circuit power level. As the value of R/R_T is increased the fraction of the power dissipated in the tether, K_T, decreases. The design point used for this concept is a $K_T = 0.05$ or R/R_T of 20. At this point the system power has decreased to 0.1 of the value at the impedance match point ($R_T = R_L$), but the power in the load has only decreased to about 0.2 of the value at maximum. This plot illustrates the point that a given tether design can be operated at an increased power level above the selected design point. The penalty is an increased fraction of the system power will be dissipated in the tether.

Using our design criteria of 25 kW at a K_T of 0.5 and the reserve power level of 75 kW, the plot indicates that the point on the abscissa where the value of P_L has increased by a factor of 3 is at approximately 6.5 and the corresponding value of K_T at this point is 0.15. Operating at this reserve power level would cause 15% of the system power to be dissipated in the tether.

In order to be able to operate at both the design and reserve power levels, both the power conditioning circuits and the tether angle constraints must be designed for the reserve levels of 75 kW. These considerations will be applied at the appropriate points in the design process.

2.3.3 System Efficiency

Using a definition of system efficiency, ϵ, where

$$\epsilon = P_B/P_S,$$

and P_B is the power delivered to the system bus, and P_S is the total power in the system. P_S is equal to the rate of decrease in orbital mechanical energy due to the drag effect of the electrodynamic tether. Note that $P_L = P_B$ + parasitic power loss, where the parasitic power losses include the plasma contactors at each end of the tether, the efficiency loss in the power conditioning circuit and loss due to ionospheric heating.

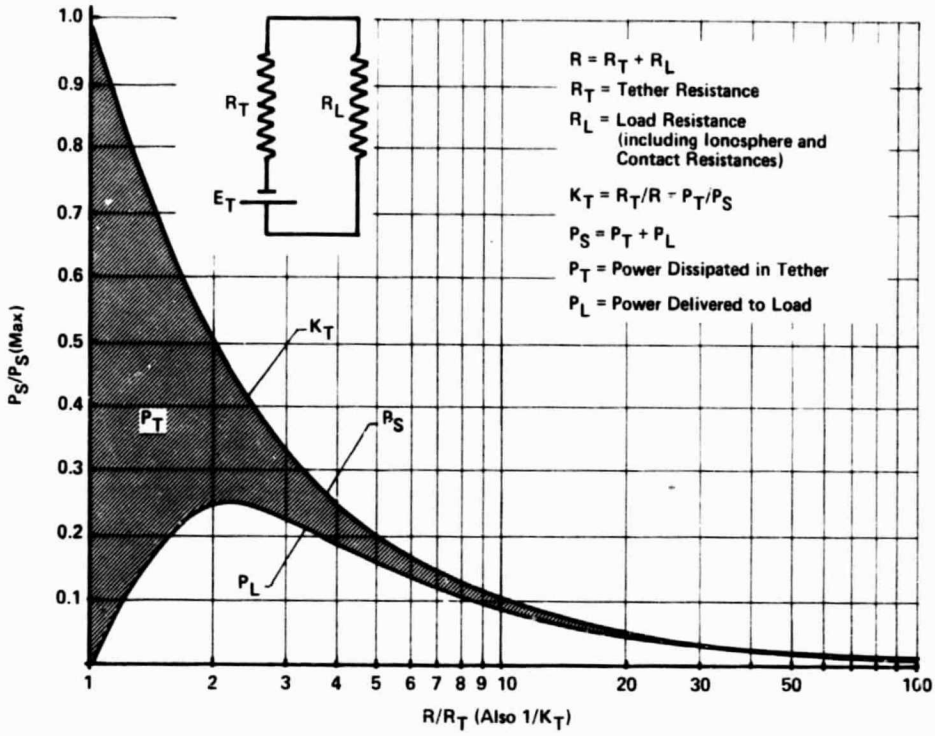

Figure 2-4 Load Power as a Function of K_T

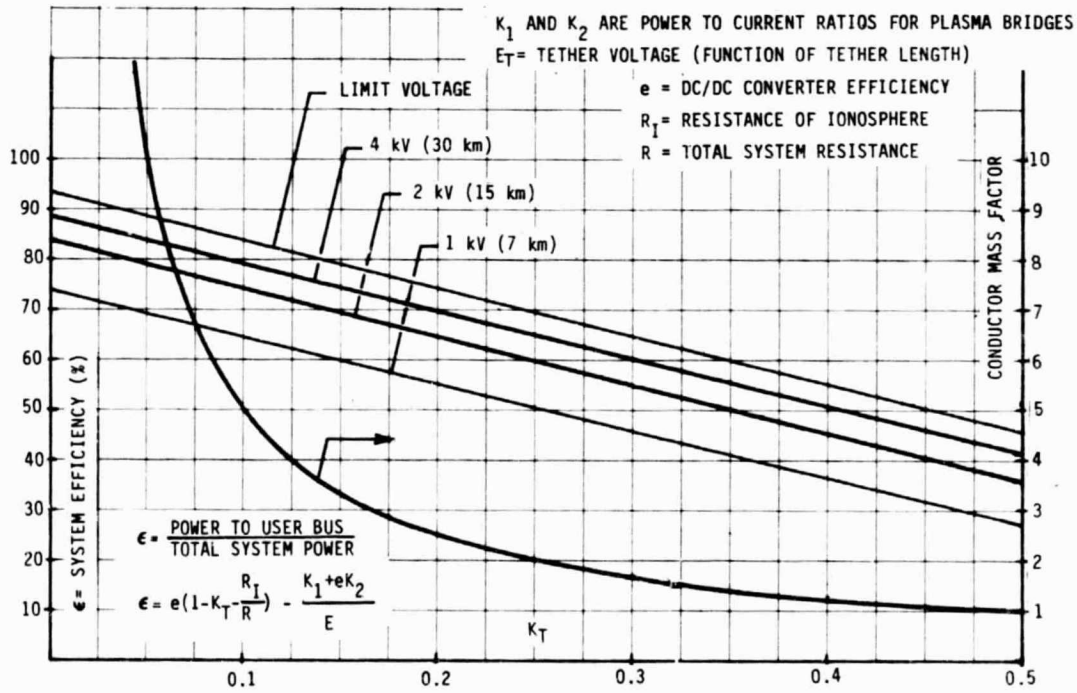

Figure 2-5 System Efficiency as a Function of K_T and Tether Voltage

The plot of these relationships against the K_T value is shown in Figure 2-5. In this figure efficiency of the power conditioning circuit is designated as "e", the resistance of the ionosphere plus contact resistance as R_I, and the induced voltage of the tether as E_T. The terms K_1 and K_2 are the respective power loss terms for the plasma contactors at the upper and lower ends of the tether. The tether is assumed to be deployed upward from the Space Station and that plasma contactors are used to provide a low resistance contact to the ionosphere. These contactors have been assumed to require power to operate as a linear function of the current in the system. As the tether voltage increases with a longer tether, the current will decrease for a given power level. This gives the family of lines for various voltage levels of the tether, E_T.

To produce this figure values were assumed:

K_1 = 50 W/electron ampere,
K_2 = 150 W/ion ampere,
e = 94%

The approximate tether lengths corresponding to the plotted values of E_T are based on an induced voltage of 133 volts per kilometer of tether.

Figure 2-5 also shows a plot of the increase in conductor mass as a factor times the conductor mass required at a K_T of 0.5 (or the impedance match condition where $R_T = R_L$). As can be seen the tether mass required at $K_T = 0.05$ is 10 times the mass at $K_T = 0.5$.

A reasonable target range for the design power for this system is assumed to be between the two inner (heavy line) curves for E_T (2 to 4 kV). At a K_T of 0.05 the resulting system efficiency E is in the range from 79 to 83 percent. At the reserve power level where $K_T = 0.15$ the resulting system efficiency range is 69 to 74 percent.

The important consideration to keep in mind here is that the significance of this system efficiency level is related to how the mechanical orbit energy is to be replaced. If it were to be replaced by a conventional propulsion system on the station, the specific impulse of the propellant used and the costs of transporting it to orbit drive the concept to keeping the system efficiency as high as practicable. On the other hand, if the orbital mechanical energy is replenished by a tethered de-orbit of the Shuttle from Space Station, then the incentive to operate the system at high efficiency is significantly reduced because of the amount of mechanical orbital energy available from the Shuttle deorbit operations.

If the system were to be operated in the mode where the orbital mechanical energy is replaced by a propulsion system, then the system efficiency relates to the amount of propellant required to replenish the orbital energy. For the reference Space Station this relationship is shown in Figure 2-6. The ordinate shows the mass of propellant required per kWh of energy delivered to the Space Station bus. The family of curves are drawn for a range of system efficiencies at 50%, 60%, 70% and 80%. The vertical bars indicate typical values of specific impulse, I_{sp}, for 3 types of propellant that have been considered for use on Space Station.

Another comparison which can be made is with an open cycle fuel cell where a typical conversion factor is 0.45 kg of oxygen/hydrogen fuel per kWh of electrical energy generated. The Figure 2-6 plot shows that an equivalent fuel to energy ratio for the tether system is 0.13 kg/kWh for an 80% efficient tether system using hydrogen/oxygen as the propulsion system. This is improvement in the ratio of fuel to energy produced by a factor of 3.5. While this is an impressive factor, it is not really relevant as open cycle fuel cells are not under consideration for Space Station.

A more meaningful comparison would be to compare the amount of drag makeup propellant required to maintain the orbit altitude of a solar array sized to produce an average bus power of 25 kW. Using the fact that the baseline power system for the Space Station is sized at 100 kW, and that the integrated drag of the resulting articulated solar arrays and radiators contribute about 56% of the total Space Station drag, we can estimate that increasing the baseline power system by 25% to 125 kW would cause a resulting increase in the drag of about 14%. Next, using an estimated average value of 5500 pounds per year for orbit maintenance propellant, this 14% increase in drag would require an additional 770 pounds of propellant per year. This translates to 0.0035 kg of propellant per kWh of solar array electrical energy.

One additional piece of information is the conversion efficiency of orbital energy (measured in terms of orbit altitude) into electrical energy. This relationship is given on Figure 2-6. A tether system operating at 80% efficiency and a power delivered to the bus of 25 kW will cause the altitude of the Space Station to decrease by 2.6 km per day. This in turn translates into about 29 days of operation at this 25 kW power level for each full length (64 km) tether deorbit of the Shuttle from Space Station. The corresponding time at 75 kW is 8.4 days.

The point to be made from the preceding paragraphs is that the justification for an electrodynamic tether auxiliary power system rests on the fact that the angular momentum to be converted into electrical energy is derived from the tether deorbit of Shuttle. If the angular momentum were to be furnished by a propulsive reboost of the Space Station, it would require about 40 times the propellant required for an equivalent solar array power system.

2.3.4 System Power Levels

The system power levels (P_S) are given by dividing the bus power by the system efficiency at the selected operating point. Using a system efficiency of 80% at the design power level (25 kW) and an efficiency of 70% at the reserve power level (75 kW) gives the corresponding system power levels:

P_S (Design Level) = 31.25 kW
P_S (Reserve Level) = 107.14 kW

These are the relevant power levels that will be required for the subsequent steps of system design.

2.3.5 Conductor Mass

The expression for conductor mass as a function of system power is:

$$M/P_S = \rho \delta / K_T K_B,$$

where ρ = resistivity (Ohm meters)
δ = density (kg/m^3)
K_T = R_T/R_S
K_B = volts/unit length (m) of tether

Evaluating the product of $\rho\delta$ over a wide range of temperature for aluminum and for copper it is found that the value of the product for aluminum is slightly over one half that for copper over the temperature range. This indicates that for a given power level an aluminum tether will weigh only a little over half one made of copper. Based on this information aluminum was selected as the perferred conductor material for this design concept.

The term K_B is a measure of the electrodynamically induced voltage generated per unit length of the tether. It depends primarily on the orbit altitude and inclination. The value for K_B varies significantly over an orbit depending on the position in orbit and on the position of the plane of the orbit with respect to the earth's tilted magnetic dipole field. The value of K_B ranges from a minimum of 120 volts/km to a maximum of 219 volts/km. A value of 136 volts/km was selected for the plot in Figure 2-5. While not at the extreme low end of the range, this value will insure system operation at 80% efficiency or better most of the time. For the intervals when K_B drops below 136 volts/km. The K_T will increase to 0.08 and the efficiency will drop to about 76%.

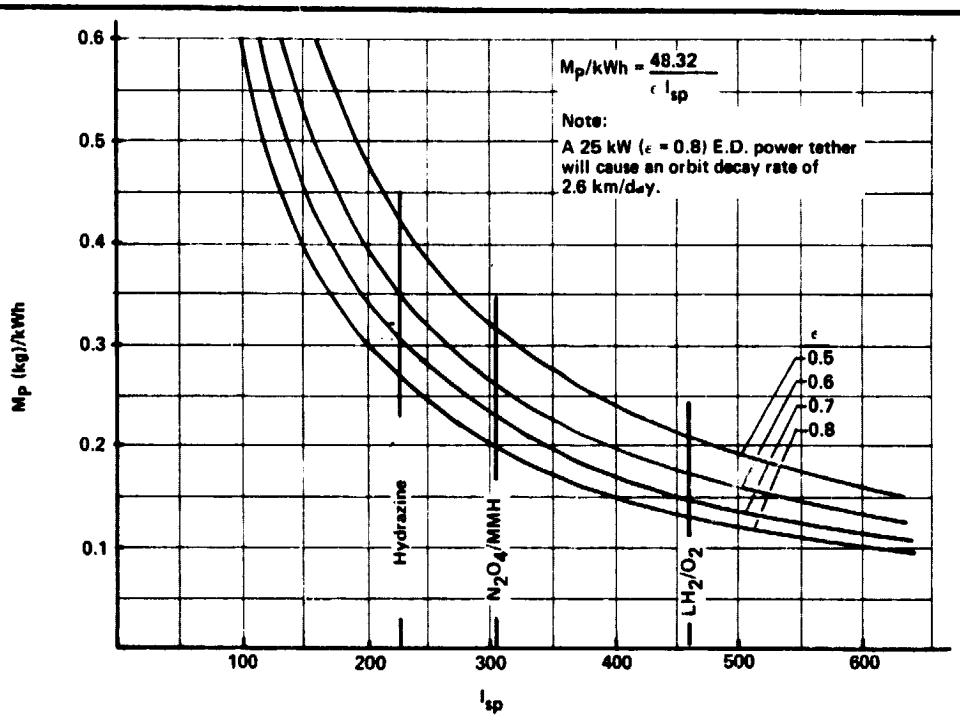

Figure 2-6 Reboost Propellant Required as a Function of I_{SP}

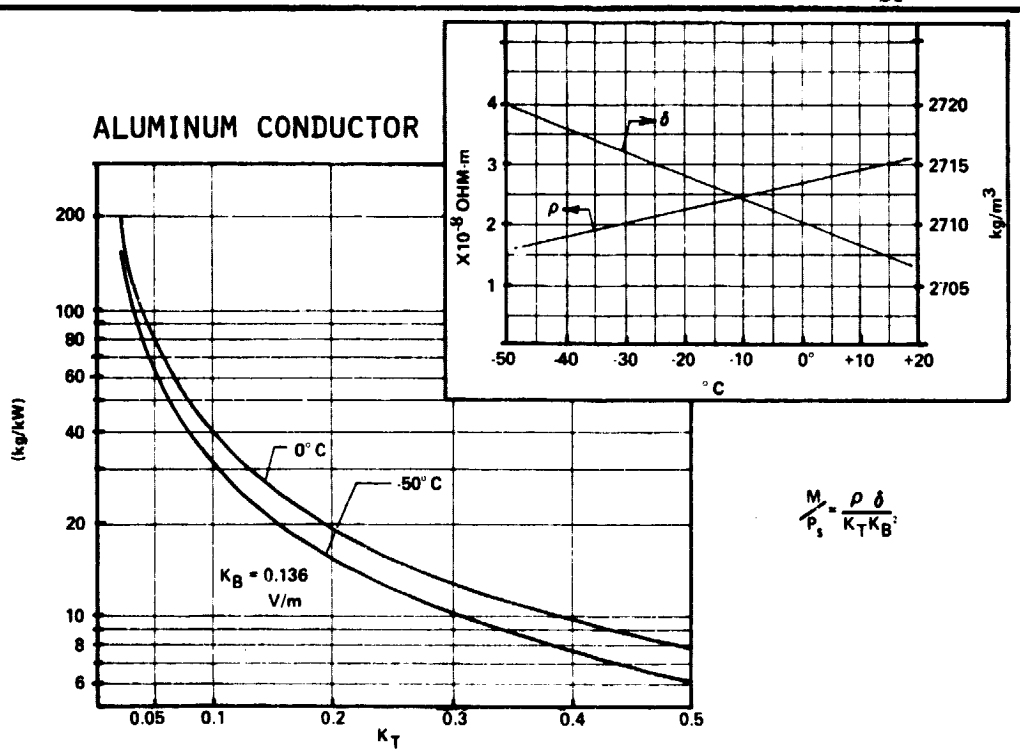

Figure 2-7 Mass to Power Relationship for an Aluminum Tether

A plot of the ratio of conductor mass (for aluminum) per kWh as a function of K_T and for two temperature values is shown in Figure 2-7. Also shown in this same figure is a plot of the values of resistivity and density as a function of temperature for the selected aluminum conductor material.

Using this relationship we can estimate the mass of tether required to operate at a K_T of 0.05 and a design power level P_s of 31.25 kW. Using an estimated operating temperature of 10°C gives a value of 82 kg/kW or a reference tether conductor mass of 82 x 31.25 = 2562 kg. This is called a reference mass because it is the mass that would be required if the tether were a solid conductor. To obtain the estimated total mass of the tether we must add an allowance factor for the helical wind of an actual stranded cable and another for the insulation required. Using a factor of 1.07 for the increase due to helical winding effects and a factor of 1.03 for the insulation gives an estimated actual tether mass of 2824 kg.

This value of 2824 kg will be used to calculate tether length in the following sections. It should be kept in mind that this is an approximation based on estimated allowance factors. Any final design for the tether will require recalculation using more precisely determined values for these allowance factors.

2.3.6 Tether Length Determination

Once the mass of the tether and the outboard tethered satellite are known the minimum length of tether required to maintain the tether angles within the specified range (less than 0.1 radian) can be determined. The need for this angle constraint is illustrated by Figure 2-8. Here two cases are shown. Both cases are operated at the same system power level which produces an electrodynamic drag force, F_D. This value for F_D is the same for both cases. In case 1 a constraint has been applied to keep the tether angle θ_1 less than 0.1r. This means that the tension force T_1 in the tether must be greater than $10F_D$. This in turn will reduce the off-set dimension of a tension alignment boom required to keep the tension force aligned with the Space Station center-of-mass. For Case 1 this alignment offset is shown as 30 feet.

For Case 2 the tether angle constraint has been relaxed to 0.4r. Now the tension force, T_2, need only be 2.5 F_D. However, in order to keep the tension force aligned to the Space Station center-of-mass an off-set of 126 feet is required. The final selection of an angle criteria for the tether needs to be determined by more detailed trade studies. For the purpose of developing this design concept an angle criteria of 0.1r was chosen as a reasonable criteria to be used.

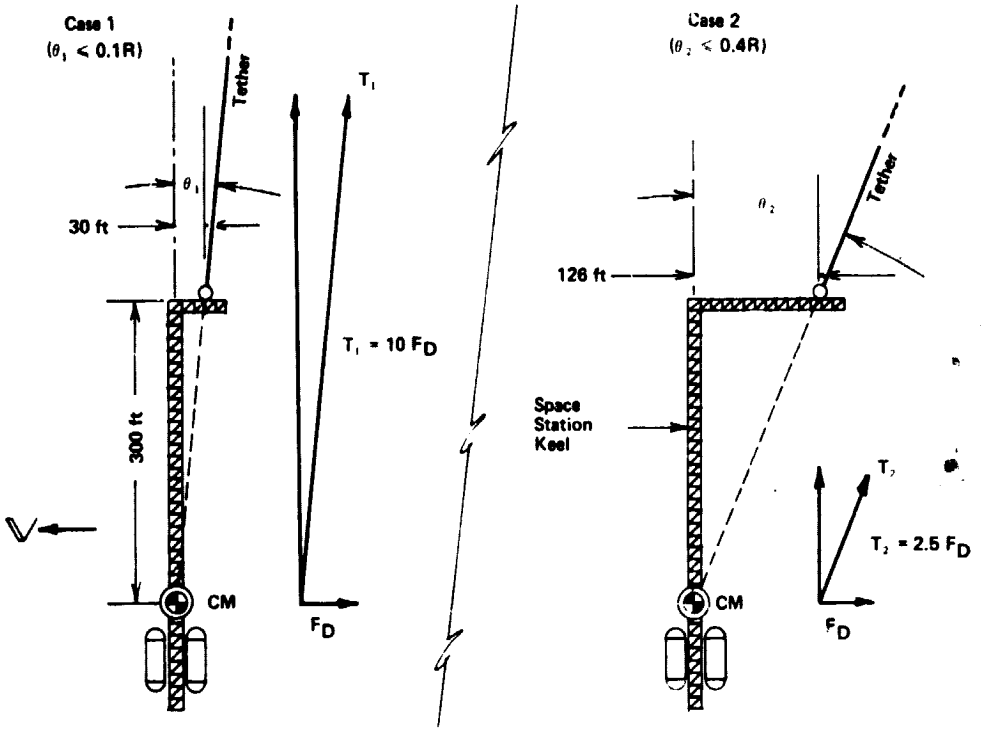

Figure 2-8 Tether Tension Constraint

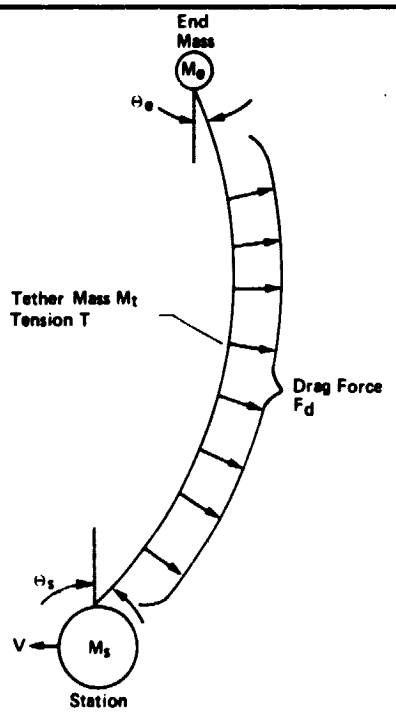

- Total Mass $M = M_e + M_t + M_s$
- In Equilibrium Condition the Drag Force F_d Must Act on Each Element in Proportion to its Fraction of Total Mass.

  $F_d = F_e + F_t + F_s$

  Using the Relation $F_d = \frac{P}{V}$

  $$F_e = \frac{M_e}{M}\frac{P}{V}\ ;\ F_t = \frac{M_t}{M}\frac{P}{V}\ ;\ F_s = \frac{M_s}{M}\frac{P}{V}$$

- Note That the Drag Forces on the End Mass and Station are Applied by the Horizontal Component of the Tether Tension "T".

  $F_e = T \text{ Sine } \Theta_e$ and $F_s = T \text{ Sine } \Theta_s$

  $\Theta_e = \text{Sine}^{-1} \frac{F_e}{T}$ $\qquad$ $\Theta_s = \text{Sine}^{-1} \frac{F_s}{T}$

- Substituting for F_e and F_s, and Using Small Angle Limits

  $$\Theta_e = \frac{M_e}{M}\frac{P}{VT} \text{ or } \frac{M_e}{M}\frac{F_d}{T}$$

  $$\Theta_s = \frac{M_s}{M}\frac{P}{VT} \text{ or } \frac{M_s}{M}\frac{F_d}{T}$$

- Solving for T

  $$T = \frac{M_S}{M}\frac{P}{V\Theta_S}$$

Figure 2-9 Tether Angle Relationships

The relationship of the tether tension, T; the mass of the station, M_S; the total mass of the system, M; the system power level, P; the angle of the tether at the station, Θ_S; and the orbital velocity, V; is shown in Figure 2-9.

Using the values:

M_s = 250,000 kg,
M = (250,000 + 2824 + 500) kg = 253,124 kg,
P = 107 kW,
Θ_S = 0.1r, and
V = 7613 m/sec.

The resulting value for the tension is:

$$T = 139 \text{ Newtons}$$

Using this value for the tension the tether length can be calculated. The relationship is given by:

$$T = (3\mu / R_o^3)\ (M_1\ M_2/M_1 + M_2)\ L$$

where:

T = tether tension (139 N),
μ = 3.992×10^{14} N M^2/kg.,
R_o = Orbit radius (6.871×10^6 m),
M_2 = mass of Space Station (250,000 kg),
M_1 = sum of end mass + tether mass/2,
= 500 + 2824/2 = 1912 kg, and
L = Minimum tether length required (m).

Solving for L = 19.8 km as a minimum required length. For the design concept a length of 20 km has been selected.

2.3.7 Tether Voltage Considerations

The electromotively induced voltage in the tether, E_T, is given by the vector scalar product:

$$E_T = \mathbf{B} \times \mathbf{V} \cdot \mathbf{L},$$

where

$\mathbf{B}$ = geomagnetic field vector (Tesla)
$\mathbf{V}$ = orbit velocity - earth rotation component (m/sec)
$\mathbf{L}$ = tether length (m)

A useful value is the voltage per unit length of tether which is given by E_T/L. This is the same as the term K_B used in Figure 2-7. The variation of E_T/L is a complicated function of altitude, inclination, position in orbit, and the position of the orbit plane with respect to the geomagnetic field. For purpose of the concept development, the values have been calculated at extremes to define the maximum to minimum range of induced voltages. These calculations were based on a tilted offset dipole model of the earth's field.

$$E_T/L = 113 \text{ V/km (minimum)}$$
$$= 207 \text{ V/km (maximum)}$$

These values apply when the tether is in a vertical orientation and straight. In the actual case as power is generated by the tether, it will assume a bowed configuration (See Figure 2-9) which will reduce the projected vertical length of the tether and, thus, the voltage. Effectively, it will appear as though the field strength is decreased with increasing power levels.

In order to make allowance for this tether bowing effect, the voltage range will be derated by a factor of 0.95. This is an estimated derating value and is used here primarily as a place holder in the system design logic.

Using these derated values, the minimum, median and maximum voltages for the 20 km tether are:

E_T (min) = 2147 volts,
E_T (median) = 3040 volts.
E_T (max) = 3933 volts,

2.3.8 Current Considerations

In order to operate the system at a constant power level, the input impedance of the power processing circuit will need to be varied to maintain the system current in a reciprocal relationship to the changing voltage of the tether.

For the specified levels of design power (25 kW) and reserve power (75 kW), the corresponding levels of system power are 31.25 kW and 107.14 kW (see 2.3.4).

The current range for design level is then:

I (max) = 14.6 Amperes,
I (median) = 10.3 Amperes,
I (min) = 8.0 Amperes.

The current range for reserve level is:

I (max) = 49.9 Amperes,
I (median) = 35.2 Amperes,
I (min) = 27.2 Amperes.

It should be noted that if the system is operated at a constant power level, the drag force on the tether caused by power generation is constant and the dynamics of the tether should stabilize into an equilibrium configuration for each selected level of power operation.

Unfortunately this situation is complicated by the presence of forces on the tether which are out of the orbit plane. This will be discussed in more detail in 2.3.12.

An approach to the design of the power processing circuits was developed for the electrodynamic tether concept studied in Phase I. This concept seems viable for use on this concept as well and will not be repeated here. The concept uses solid state circuitry based on a series resonant inverter topology currently under development. The system is built up of modular units to allow sizing to any particular requirement and for overall system reliability. The requirement to operate at the reserve power level for the system means that the power capacity of the processing circuitry must be proportionately increased over the design level. This would be accommodated by an increased number of modules available to be bought on line when the system power level is to be increased above the design level of 25 kW.

The operating efficiency of these power processing units has been estimated at 94% and was the basis for use of this efficiency value in the calculation of the overall system efficiency (See 2.3.3).

2.3.9 Electrical Potential Considerations

In order to design the necessary electrical insulation for the system, the electrical potential levels at various locations must be understood. These potential levels are mapped over the tether system in Figure 2-10.

The tether is indicated as a series of distributed voltages and resistances which sum to the values V_T and R_T. The next circuit element is the Space Station power processing system with a voltage drop V_S and impedance R_S. Next is the Space Station plasma contactor with voltage drop V_{C2} and impedance R_{C2}. Next is the ionospheric circuit path with voltage drop V_I and impedance R_I. Finally, to complete the circuit path, is the tether end plasma contactor with voltage drop V_{C1} and impedance R_{C1}. The node points in the circuit are at the ends of the tether and the interface between the station power processor and the plasma contactor. The ionosphere plasma potential is identified as V_o and is shown as the reference potential on the potential plot in the lower portion of Figure 2-10. Referring back to 2.3.2 and Figure 2-4, the load resistance R_L used reappears in this circuit where

$$R_L = R_S + R_{C2} + R_I + R_{C1}$$

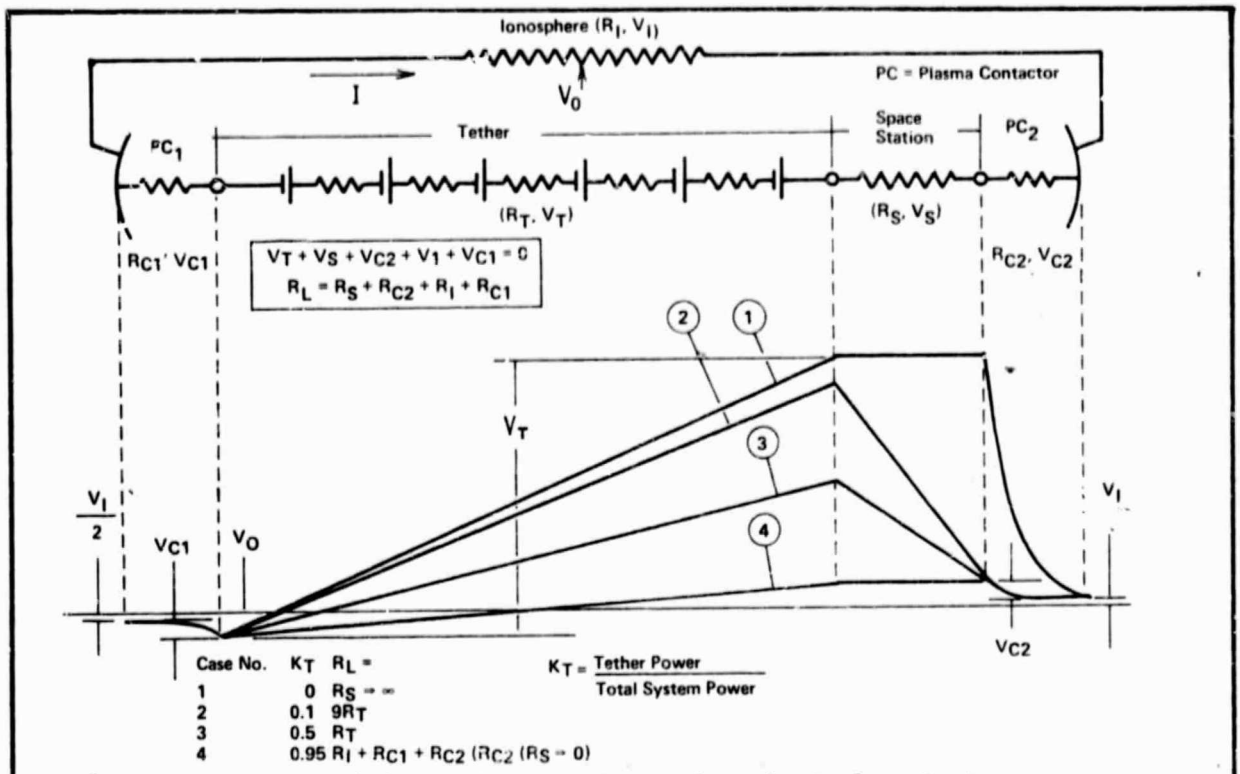

Figure 2-10 Potential Map for an Electrodynamic Tether System

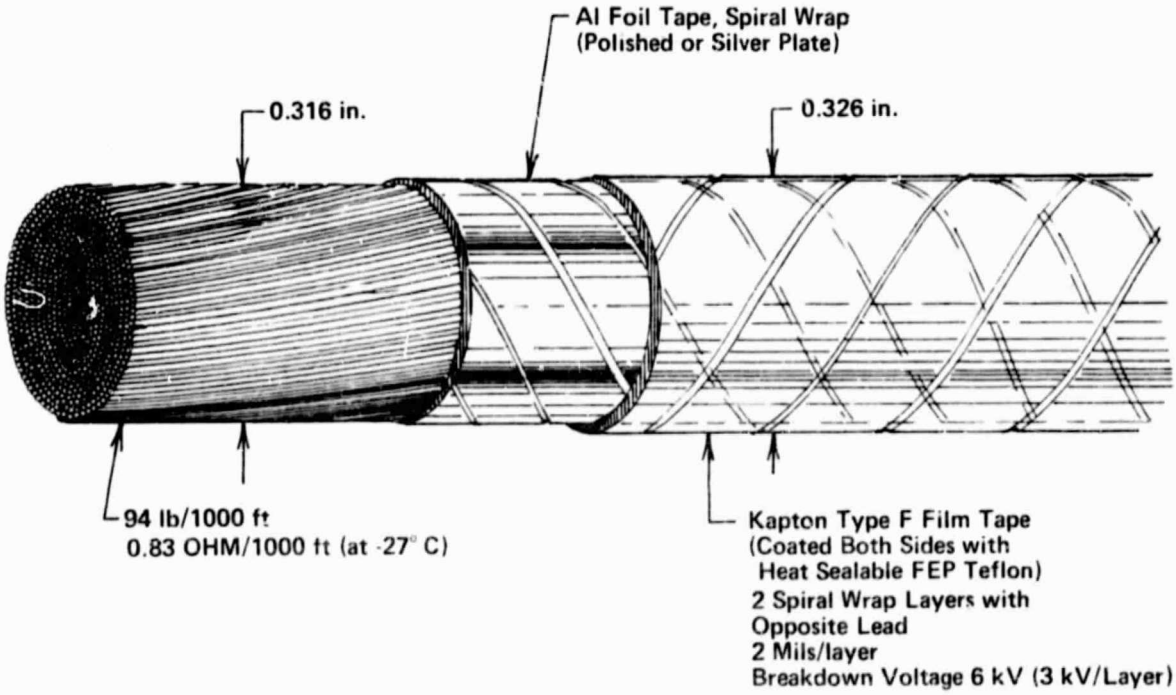

Figure 2-11 Tether Construction Using a Bunch Stranding

The voltages around the circuit must sum to zero.

$$V_T + V_S + V_{C2} + V_T + V_{C1} = 0$$

The potential plot is shown for 4 cases of system operation.

Case 1 is with the power converter open circuited. Here the Space Station will rise to almost the full tether potential with respect to the ionosphere. This is based on the assumption that the plasma contactor at the top end of the tether will keep the tether potential close to V_o at the node point.

Case 2 is the best approximation to the design case. The potential at the station end drops by the amount IR_T and the voltage drop across the power conditioning circuit is near maximum. The point here is that for low values of K_T (i.e. 0.05) the potential difference across the tether insulation at the station node will essentially be at the full tether potential.

Case 3 shows the situation where $K_T = 0.5$, or the load resistance, R_L, is equal to R_T. This is the impedance match condition where one-half of the system power is dissipated in the tether. Here the maximum potential drop across the insulation is a little less than half the full tether potential because of the IR drop in the tether itself.

Case 4 is shown for completeness and illustrates the condition that would exist if the power processing circuit were completely shorted.

The conclusion here is that the system must be insulated to withstand the maximum voltage generated by the tether. This includes the Space Station installation and the station end of the tether. The potential drop across the tether insulation will decrease linearly with distance from the station. This would indicate that the tether insulation thickness could be varied along the length of the tether with the greatest thickness on the inboard end.

2.3.10 Tether Construction

A proposed approach to construction of the tether is shown in Figure 2-11. A bunch stranding concept is used to permit the required resolution in adjusting the conductor cross section to the desired value and to provide flexibility in the cable.

An inner wrap of polished foil is shown as a reflective surface to provide low absorptivity to radiation. A metallic foil was used to avoid any differential voltages between this layer and the tether conductor. Further thermal analyses may indicate that this layer is not required.

The outer insulating portion is made up of multiple wraps of a Kapton film tape which is coated on both sides with a heat sealable FEP Teflon. This construction method will permit the long continuous application of insulation by a wrapping process during manufacture and a graded thickness capability by the number of wraps applied. The insulation will be heat fused after application. The Teflon also provides an outer surface with good resistance to erosion from residual atmosphere effects (e.g. atomic oxygen).

Using a rated breakdown voltage of 3kV per layer, it has been assumed that 2 layers of the tape wrap would be adequate over most of the tether length and with the inboard region going to three or four layers.

This construction method would also be compatible with on orbit repair in event the insulation were damaged by handling or by micrometeorite impact.

2.3.11 Tether Temperature

Using values of absorptivity of 0.15 and emissivity of 0.85 for the tether surfaces gives equilibrium temperatures for the eclipse and sunside temperatures for the design power (25 kW) of:

Eclipse = - 80°C,
Sun Side = - 40°C.

And for the reserve level power (75 kW):

Eclipse = -12°C
Sun Side = + 8°C

The actual operating temperatures should range between these extremes during an orbit. No analysis has been performed on the effects of this temperature cycling on the proposed construction method.

Further study may indicate that higher operating temperatures would be preferable for materials considerations. This should be achievable by designing for increased absorptivity and decreased emissivity values for the tether surface.

Recall that for the original estimate of tether conductor mass a temperature of +10°C was used. With the temperature range for the design level power identified above (-40 to -80°C), the tether is over designed and the K_T actually achieved should be less than 0.05. However, for the reserve power case (+8 to -12°C), the design should be near optimum.

2.3.12 Cross Track Libration Effects

Due to the 28.5 degree inclination of the Space Station orbit, the tether cuts across the magnetic field lines at other than the optimum 90 degree angle when crossing the equator. This effect is further accentuated by the 11 degree tilt of the earth's dipole field with respect to the earth's axis. The angle between the orbital velocity vector and the horizontal component of the magnetic field vector ranges over $90 \pm 28.5 \pm 11$ degrees. The 28.5 degree component varies thru a cycle per orbit and the 11 degree component thru a cycle per earth rotation.

A time plot of the effects of this angle variation on the magnitude of the cross track forces on the tether is shown in Figure 2-12.

In order to generate a system power of 31.25 kW (25 kW design level), the in-plane component of the electromagnetic drag force on the tether must be 4.1 Newtons. The out-of-plane or cross track component will vary as the plot shown on Figure 2-12. The effect of this forcing function will be to drive the cross track libration of the tether.

The natural frequency for tether libration in the cross track mode is 2 times the orbit frequency while the forcing function varies at the orbit frequency. The resulting dynamics of the tether have not been analyzed. The initial assumption has been made that the angular displacement of the tether from vertical would be in phase with the forcing function which would indicate that the tether would be vertical at the high latitude portion of the orbit. If this assumption is confirmed by further analysis, this is a fortuitous development since the cross track libration angles in combination with the magnetic field dip angle have an exaggerated effect on the tether voltage developed at high geomagnetic latitudes. For the most extreme case when the earth dipole is tilted 11 degrees toward the orbit, the geomagnetic dip angle is almost 60° down from the horizontal. Under these extreme dip angle conditions, a cross track libration angle of 6° would cause an induced voltage variation, factor of 1.15 to 0.81.

This area of cross track libration is recommended as an area for further study and simulation. The dynamic behavior of the tether is a result of interaction of the geomagnetic field, the tether dynamics and the power generated. High fidelity computer simulations are a necessary tool to scope the integrated effects of these forces on the tether. A capability for extended run times, which integrate the effects over multiple earth rotations, will probably be required.

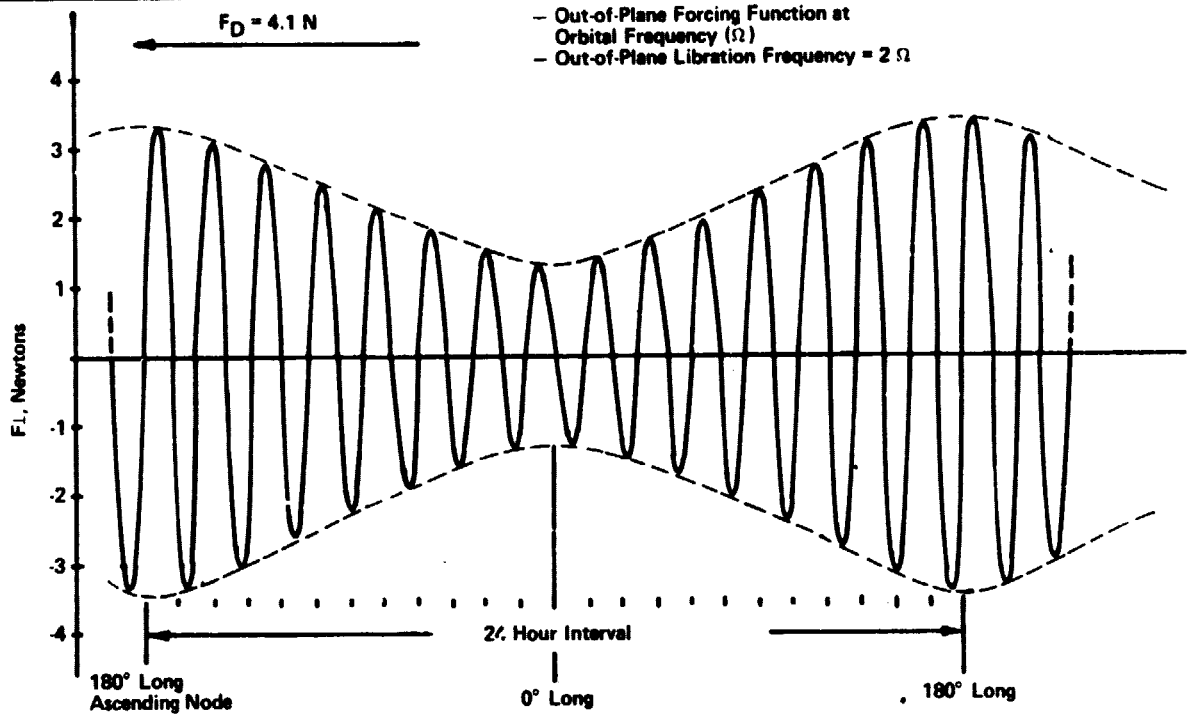

Figure 2-12 Variation With Time for the Cross Track Component of Tether Force

Blank Space

2.3.13 Tether System Characteristics

The tether characteristics resulting from the concept design development are summarized below:

Conductor material: Bunch stranded aluminum wire cable
Insulation: Multiple layers of heat sealable Type F Kapton tape
Length: 20 km
Conductor mass: 2741 kg.
Total tether mass: 2824 kg.
Mass/Length: 141.2 kg/km
Conductor diameter: 0.78 cm
Tether diameter: 0.83 cm
Tether voltage range: 2147 to 3933 V
Current range at design power: 8.0 to 14.6 A.
Current range at reserve power: 27.2 to 49.9 A.
Temperature range at design power: -40 to -80°C
Temperature range at reserve power: +8 to -12°C
Tension at Space Station end: 139N (31 lbs)
g level induced on Station: 6×10^{-5}g
Tether end mass: 500 kg.
Space Station mass: 250,000 kg.
Tether reel size: Length 2 m
Core diameter 0.5 m
Outside diameter 1.1 m
Tension alignment system: Similar to Concept F (Figure 4-10)

2.4 Tethered Platform from Space Station - Concept C

No significant changes were made to this concept during the Phase II study.

The baseline definition for the concept is the same as was developed in the Phase I final briefing report.

The platform mass is 31,100 lb (14,136 kg) deployed out to a tether length of 5.4 nmi (10 km). At full deployment the tether tension is 110 lbf (490N). The resulting acceleration levels are 2.7×10^{-3}g on the platform and 2.0×10^{-4}g on the Space Station. Platform power is supplied by an autonomous power system on the platform.

2.5 Tether Mediated Rendezvous of an Orbital Maneuvering Vehicle with an Orbital Transfer Vehicle - Concept D

No significant changes were made to this concept during the Phase II study and the baseline for the concept remains as described in the Phase I final briefing report.

The OMV is tether deployed downward from Space Station to a tether length of 7 nmi (13 km). The returning OTV is in an elliptical transfer orbit of 220 x 263 nmi. At apogee of the orbit, the relative velocities between the tethered OMV and the OTV will go to zero. The rendezvous and capture must be effected during the short interval of low relative velocity.

2.6 AXAF Servicing and Tether Reboost - Concept B2

This concept was developed to determine if the servicing and re-boost mission provided any increased performance benefits over the original Concept B for the initial insertion of AXAF into its operational orbit.

The resulting revisions to the concept are in the mission operations area which are described in 3.3.3 of the report.

Some significant findings with respect to the modified mission operations for the revised concept are the following:

1. There is a requirement to perform a Shuttle OMS burn subsequent to the rendezvous with the AXAF. Either the AXAF must be mounted into the cargo bay or the burn must be performed with the AXAF mounted onto a servicing fixture and projecting out of the cargo bay. The acceptability of either of these is questionable.

2. The 205 nmi orbit for the rendezvous reduces the length of tether which can be used and, hence, the benefit to be gained from the tether deployment operation.

Another new item of information relating to both the B and B2 versions of this concept is the sensitivity of the AXAF solar array systems to acceleration levels. This sensitivity will probably prevent any extensive operational checkout of the AXAF prior to release from the tether. During the Phase I study this had been considered a potential benefit of the concept.

3.0 COMPARISON WITH ALTERNATE CONCEPTS

At the end of Phase I of the current contract 5 concepts were selected for further study and comparison with non-tethered (baseline) approaches. Because of the large amount of angular momentum imparted to the Space Station by the tethered Shuttle deployment (Concept A) a momentum balance technique was adopted.

The Space Station momentum balance technique considers the various activities affecting Station altitude (tethered Shuttle deployment, tethered OMV launches, tethered OTV launches, Space Station drag decay of the orbit, etc.) and keeps the Space Station within altitude limits desired so that Shuttle payload delivery capability or other mission constraints are not compromised. Concept F (Tethered OTV Launch) was added to the previously selected concepts since it is the key element for utilization of excess Space Station angular momentum.

For the analysis approach used in the study the initial effort consisted of a study of appropriate mission models to have a basis for OMV and OTV launch requirements for both the momentum analysis and concept comparisons. Techniques for the estimation of Shuttle performance, OMV performance and OTV performance were identified and assumptions were made to determine both the baseline performance and the tethered concepts performance capability for comparison purposes.

3.1 Comparison Criteria

The following sub-section details the approaches and displays the results of studying the Shuttle, OMV, and OTV performance parametrically at various tether lengths and payload weights. Rationale for the selection of the mission candidates for tether launch from the Space Station and also the effects of Space Station orbit-decay are discussed. Tether deployment considerations, tether transportation principles, and basic equations used are also included.

Throughout the comparison it was found that the common currency of tether transportation applications benefits is propellant savings. This has been found to be true for the Shuttle, the OMV, the OTV, and the Space Station itself as will be shown throughout the following discussions.

3.1.1 Mission Model Analysis

Various mission models were investigated including previous models used for OMV, OTV, and Space Station architecture studies at Martin Marietta Denver over the past 1-2 years. The recent mission models associated with the Space Station for the 1991-2000 time period were found to be the most useful in determining candidates for tether launches from the Space Station. Consultations were also made with current Denver OMV, OTV, and Space Station study teams as needed to further identify mission characteristics.

OMV mission candidates for tethered launch from Space Station are summarized in Table 3-1 and were selected from the NASA "Nominal Mission Model (FY 1983-2000) Rev. 7 (SS), Space Station Advocacy", MSFC, July 1984. Potential candidates shown include placement, retrieval, and servicing missions in the altitude range from 270 nmi to 378 nmi altitude. Estimated payload weights vary from 2750 lb to almost 50,000 lb. The selected missions are basically science applications.

Since the Space Station is nominally at 270 nmi the retrieval missions shown at 270 nmi were not recommended since negligible angular momentum transfer effects would be realized. Of the 24 tether candidate missions listed for the 1991-2000 time period, only 18 were recommended as OMV tethered launch candidates for having a potential for propellant savings and Space Station momentum balance. Since a total of 300 Space Station OMV missions were identified in the mission model, the recommended tether candidate missions are only about 6% of the total. The prime reason for this is that most of the OMV missions are conducted in close proximity to the Space Station and are not good candidates for tether launches.

OTV mission candidates for tethered launch from the Space Station are summarized in Table 3-2 and were selected from the NASA "Space Station Mission Requirements Report", KSC, MRWG001, May 1984. Selected candidates shown start in 1995 (first Space Station OTV Launches) and are all delivery or servicing missions to geosynchronous orbit. Estimated payload weights vary from 1500 lb to 20,000 lb, including multiple payload launches, as indicated. The selected missions include science and applications, and communication satellite missions.

There are 72 OTV missions listed for the 1995-2000 time period. Of these 69 were recommended as tether launch candidates. The recommended tether launch assist missions are 95% of the total OTV Space Station missions planned.

3.1.2 Tether Deployment Considerations

Throughout the Phase I and Phase II contract studies certain assumptions and ground rules have evolved relative to tether applications for both the Space Station and Shuttle applications. In general, these are engineering judgement factors concerning design practice, operational procedures, safety considerations, and economic factors. The tether assumptions and ground rules currently in use are as follows:

(1) All releases of deployed masses assume a static (non-swinging) condition for release.

(2) Tether deployment or retrieval should each be accomplished within an 8 hr. shift.

CANDIDATE OMV MISSIONS*	YEAR (1)										CIRCULAR ORBIT ALTITUDE	ESTIMATED WEIGHT
	91	92	93	94	95	96	97	98	99	00		
											(NMI-28.5°)	(LB)
SOLAR CORONAL DIAG. MISS.					1P		1R				360	2750
SPACE TELESCOPE SERVICING		1R/1P			1R/1P			1R/1P			320(270R)	25500
COSMIC DEPLOY. OPT. SYSTEM				1P							320	28800
AXAF				1R/1P			1R/1P			1R/1P	320(270R)	22640
FAR UV SPECTROS. EXPL. MISS.			1P		1R/1P		1R				360	3000
LARGE DEPLOY. REFL. MISS.							1P		1S		378	25000(P) 3000(S)
IR INTERFER. DEPLOYMENT								2P			378	49610
SOLAR SEISMOLOGY					1S						360	3000(est.)
TOTALS	0	2	1	3	6	0	5	4	1	2	24 TOTAL	
TOTAL RECOMMENDED MISSIONS	0	1	1	2	5	0	4	3	1	1	18 TOTAL (2)	

*MISSIONS SELECTED FROM "NOMINAL MISSION MODEL (FY 1983-2000) REV. 7 (SS), SPACE STATION ADVOCACY" JULY 1984, AS POTENTIAL CANDIDATES FOR TETHER LAUNCHES OF OMV/PAYLOAD FROM THE SPACE STATION.
NOTES: (1) P = PLACEMENTS; R = RETRIEVAL; S = SERVICING
(2) LAUNCH CANDIDATES ARE UNDERLINED (REPRESENTS APPROXIMATELY 6% OF TOTAL OMV SPACE STATION MISSIONS, 1991-2000).

Table 3-1 Tethered OMV Mission Candidates at Space Station

CANDIDATE OTV MISSIONS*	YEAR						ORBIT	ESTIMATED WEIGHT
	95	96	97	98	99	00		
								(LB)
EXPERIMENTAL GEO. PLATFORM	1	2	1	1	1	2	GEOSYNCHRONOUS	12000
PAM-A CLASS SATS (3/1)	2	4	3	4	3	4	"	2500 ea.
PAM-D CLASS SATS (3/1)	2	1	5	4	3	2	"	1800 ea.
IUS CLASS SATS (2/1)		3	2	5	5	4	"	6000 ea.
CENTAUR CLASS SATS				1			"	13000
CENTAUR CLASS/SAT. SERVICING				1				7000 UP 4000 DOWN
GEOSYNCH. PLATFORM					1			20000
IUS CLASS/SAT. SERVICING					1		"	3000
PAM-A CLASS/SAT. SERVICING						1	"	1500
TOTALS	5	10	11	16	14	13	69 TOTAL	
TOTAL RECOMMENDED MISSIONS	5	10	11	16	14	13	69 TOTAL (1)	

*MISSIONS SELECTED FROM "SPACE STATION MISSION REQUIREMENTS REPORT", KSC, MRWG001, MAY 1984.
NOTE: (1) REPRESENTS OVER 95% OF TOTAL OTV SPACE STATION MISSIONS, 1995-2000.

Table 3-2 Tethered OTV Launch Candidates at Space Station

(3) The tether is assumed to be untapered with a maximum deployed length of 150 km.

(4) A minimum structural design factor of safety of 2.0 is required, and the tether should be designed for acceptable recoil characteristics.

(5) The tether should be designed for multiple reuse for all planned tether applications at the Space Station. The design goal is 100 or more reuses.

(6) The baseline tether material selected is Kevlar (low density, high tensile strength) jacketed with Teflon (for abrasion and erosion resistance).

(7) In all applications, an emergency tether release (e.g. guillotine) at both ends of the tether is required for safety.

Figure 3-1 illustrates the basic tether transportation principles used in the transfer of angular momentum between tethered masses, as applied in this study. In this chart, the following chart, and in other references to tethered masses, M_1 will always be referred to as the lower tethered mass, with M_2 as the upper tethered mass (regardless of which one is the deployer).

The left side of Figure 3-1 shows the general relationship between the masses for a static condition prior to tether release, for a given tether length, L. The distance that M_1 is below the original orbit altitude (h_o) is labeled L_1 and is proportional to the ratio of M_2 over $M_1 + M_2$, as indicated. From this relationship the pre-release altitudes of two masses can be obtained.

The right side of Figure 3-1 indicates the instant of tether release (above) with the resulting post-release orbits of the two masses after release. Prior to release the center of mass is moving along the circular orbit path indicated by the dashed line. This path corresponds to the original orbit before deployment was initiated (to first order). Before the release the tether continues to point to the center of the earth due to the gravity gradient effect and M_1 moves slower than circular orbital velocity at its altitude (loses momentum) while M_2 moves faster than circular orbital velocity for its higher altitude (gains momentum).

After the release M_1 descends to a lower perigee with its apogee corresponding to the release altitude while M_2 ascends to a higher apogee altitude with its perigee corresponding to the original release altitude of M_2. Note that for a given tether length (L), the approximate separation distance between the two post-release orbits can reach approximately 7L for a static release (reduces some from this, depending upon the ratio of the two masses and the mass of the tether, as discussed following).

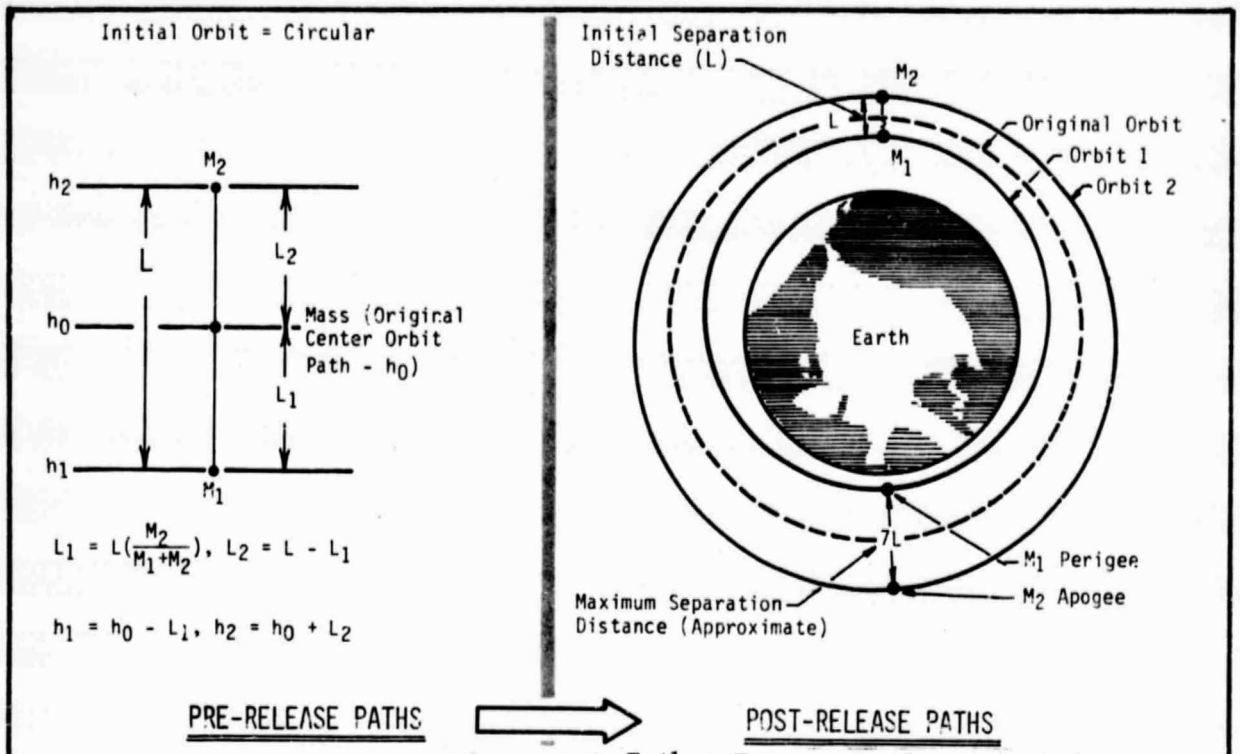

Figure 3-1 Tether Transportation Principles

DEFINITIONS

M_1 = LOWER MASS (INCLUDING ONE-HALF OF DEPLOYED TETHER MASS)

M_2 = UPPER MASS (INCLUDING ONE-HALF OF DEPLOYED TETHER MASS)

M_1' = LOWER MASS (EXCLUDING DEPLOYED TETHER MASS)

M_2' = UPPER MASS (EXCLUDING DEPLOYED TETHER MASS)

σ_M = MASS DENSITY OF TETHER (MASS PER UNIT LENGTH)

Ω = ORBITAL RATE OF TETHERED SYSTEM (RADIANS PER UNIT TIME)

$\overset{*}{M}$ = EFFECTIVE MASS DEPLOYED = $(M_1M_2) / (M_1 + M_2)$

L = DEPLOYED TETHER LENGTH

R = RADIUS OF POINT OF INTEREST FROM EARTH CENTER

$\lambda = L/R_0$; $P = \lambda(\nu/(1+\nu))$

$\nu = M_2/M_1$; $Q = \lambda/(1+\nu)$

SUBSCRIPTS: 0 = CONDITION BEFORE TETHER DEPLOYMENT

1 = REFERS TO LOWER MASS CONDITION

2 = REFERS TO UPPER MASS CONDITION

A,P REFER TO APOGEE AND PERIGEE, RESPECTIVELY

RELATIONSHIPS

- o $R_{A_1} = R_0(1-P)$
- o $R_{P_1} = R_0(1-4P)/(1+3P)$
- o $R_{P_2} = R_0(1+Q)$
- o $R_{A_2} = R_0(1+4Q)/(1-3Q)$
- o $h_{(altitude)} = R_{(NMI)} - 3444$
- o T (Tether tension) = $3\overset{*}{M}\Omega^2 L$
- o E (Energy Developed/required) = $3\Omega^2(K_1L^2/2+K_2L^3/3)$

  where $K_1 = M_1'M_2'/(M_1+M_2)$ AND $K_2 = \sigma_M\left|M_1'-M_2'\right|/2(M_1+M_2)$

Table 3-3 Basic Tether Equations

The basic tether equations (Table 3-3) used for computing the pre-release and post-release orbit characteristics for circular orbits were obtained from the paper by Prof. Manuel Martinez-Sanchez and Sarah A. Gavit of MIT entitled "Transportation Applications in Space" which was delivered at the AIAA Symposium at Costa Mesa, California, June 5-7, 1984, with additional derivational work completed at Martin-Denver. Also included is the standard equation for calculating tether tension, considering tether mass and a procedure for obtaining energy developed during deployment or energy required during retrieval (considering tether mass). The equations listed are adequately accurate for this type of analysis and are generally self-explanatory, with the following guidelines included.

The way the equations are written M_1 is always the lower mass and M_2 the upper mass. If, for example, a payload is fully deployed above the Space Station M_1 will be the Space Station mass including one-half of the deployed tether mass and M_2 will be the payload mass (plus the PIDM) and including one-half of the deployed tether mass. If a payload is deployed downward from the Space Station, then the Space Station will be designated M_2, etc. In all equations units of mass must be used to obtain proper units (e.g. tension will be in units of force). Also note that in the definition of K_2 (used in the energy equation) the absolute value $|M_1' - M_2'|$ must be used. Energy is normally converted to electrical units (kWh) for tether deployer sizing purposes. Equations applying to elliptical orbits may also be found in the above reference (Martinez-Sanchez/Gavit).

3.1.3 Performance Characteristics

This subsection discusses the performance characteristics of the Shuttle, OMV, OTV, and Space Station, including equations and procedures used and data generated for the baseline approach and the tethered approach in parametric form. Assumptions and ground rules used for the parametric analyses are included for completeness. The data and procedure presented allow determination of propellant savings for a general tether deployment mission from the Space Station or the Shuttle, given payload weights, mission altitudes, and tether length requirements. Equation derivations are included in Appendix A.

3.1.3.1 STS Performance

The basic Shuttle assumptions used for this study are:

(1) Because of the payload benefits at higher altitudes, direct insertion launches are assumed for all cases (i.e., the insertion apogee is at the desired circular orbit or at the apogee of the desired elliptical orbit).

(2) OMS propellant savings is the Shuttle parameter that compares tethered missions with baseline approaches.

(3) Adequate OMS propellant is always loaded to allow accomplishment of an abort return with the cargo.

(4) Typical Orbiter OV-103 weight data is used, as specified.

(5) Shuttle deorbits from elliptical orbits are from apogee direct (preferred) or can be via a 100 nmi circular orbit (if required).

(6) All Shuttle tether releases are static and impulsive delta velocity calculations are used throughout.

To determine Shuttle OMS propellant requirements and savings it is necessary to determine delta velocity requirements for initial orbit insertion and also for the deorbit sequence to re-entry. In addition it is necessary to determine the weight of the Orbiter at initiation of the first OMS burn. The following figures (Figures 3-2 through 3-4) and Table 3-3 cover the procedure for obtaining an estimate of Shuttle payload capability and OMS propellant requirements for a given direct orbit insertion mission from the ETR (Eastern Test Range).

Figure 3-2 presents the required OMS insertion velocity increment (delta V_1) as a function of Shuttle direct insertion altitude for circular orbits from 100 nmi to 350 nmi altitude and also for elliptical orbits with perigee altitudes from 100 nmi to 350 nmi.

This data was generated using the standard orbital apogee velocity equation given on Figure 3-2 and defines delta V_1 as the difference between the final apogee velocity desired and the initial apogee velocity obtained from the direct insertion conditions generated at Main Engine Cutoff (MECO). An initial orbit perigee of 27 nmi was assumed for all cases as being typical from the reference "Performance Estimation Technique for Space Shuttle Direct Orbit Insertion Missions - ETR Missions" NASA, JSC, October 1982. Details of this procedure and equation derivation, as well as those that follow in Subsection 3.1.3, are given in Appendix A.

To assist in the use of the overall procedure, 2 examples are used in the following illustrations which also help to show how tethered and untethered concepts are compared. Concept B (Placing the AXAF Spacecraft into a 320 nmi orbit) is used to compare the two approaches. Note in Figure 3-2 that a direct insertion to 320 nmi (Ex. 1 - Baseline) with the Orbiter requires 505 fps (delta V_1), whereas the tethered approach (Ex. 2) requires only 165 fps (delta V_1).

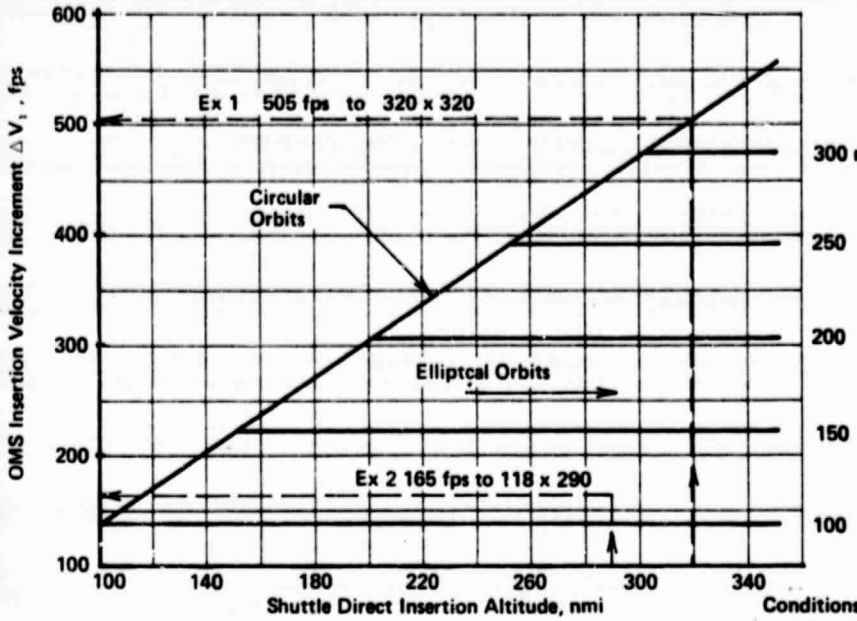

$$\Delta V_1 = V_{A_{Final}} - V_{A_{Initial}}$$

Where

$$V_A \left(\begin{matrix}\text{Apogee}\\ \text{Velocity}\end{matrix}\right) = \sqrt{\frac{(1-e)\,\mu}{r_A}}$$

Conditions:

1. 27-nmi perigee altitude (typical) assumed for initial orbit to apogee in all cases. Ref "Performance Estimation Technique for Space Shuttle Direct Orbit Insertion Mission-ETR Mission", JSC, Oct 82.
2. Apogee insertion.

Figure 3-2 Shuttle OMS Direct Insertion Delta V Requirements

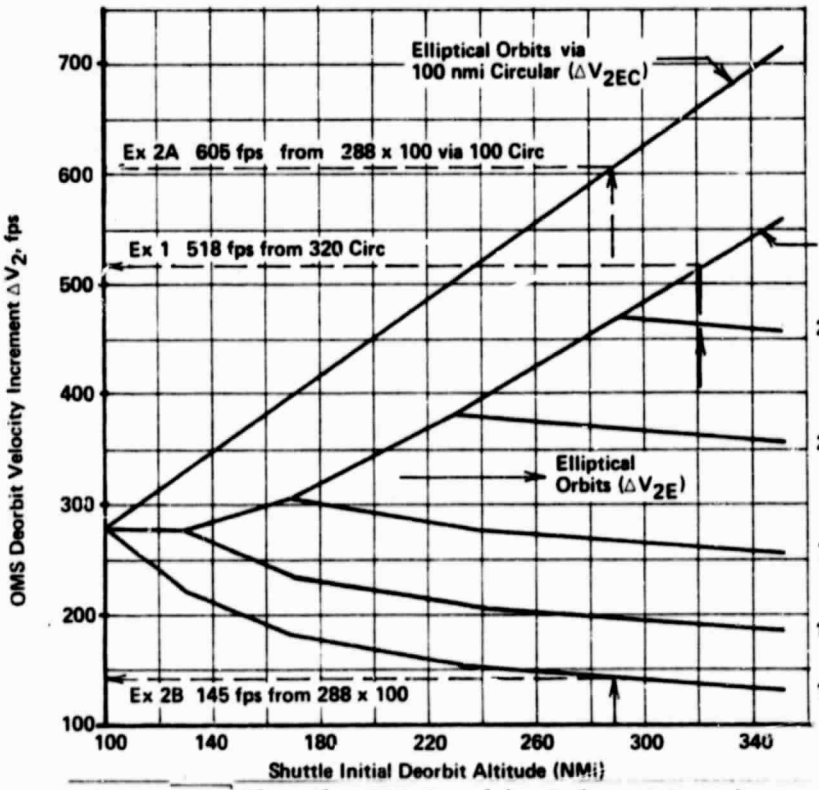

$$\Delta V_{2EC} = (V_P - V_C)_{100} + \Delta V_{2C_{100}}$$

Where

$$V_P = \sqrt{\frac{(1+e)\,\mu}{R_P}}$$

• Circular Orbits (ΔV_{2C})

$$\Delta V_{2E} = \Delta V_{2C} - (V_{Circ} - V_{Apogee})$$

• Ref - JSC, approximate reentry ΔV requirement from circular orbits via MacCroft, Sep. 84 (MSFC).

Figure 3-3 Shuttle OMS Deorbit Delta V Requirements

Figure 3-3 summarizes the required OMS deorbit velocity increment (delta V_2) as a function of Shuttle initial deorbit altitude for circular orbits from 100 nmi to 350 nmi and for elliptical orbits with perigees from 100 nmi to 350 nmi. In both of those cases delta V_2 is made up of a single deorbit OMS burn at apogee (or at circular orbit altitude). For comparison purposes the delta V_2 requirement for descent from elliptical orbits with a 100 nmi perigee via a 100 nmi circular orbit (two OMS burn case) is shown (more conservative reentry sequence).

The basis for the calculated data is the JSC reference which gives approximate reentry delta V requirements from circular orbits. This is the curve made up of a series of straight line segments entitled circular orbits. This data was received from Mr. Mac Croft of MSFC in September 1984 and is considered a good method for first order estimates. Delta V_2 for elliptical orbits was obtained by calculating the difference between the apogee velocity of the elliptical orbit and the circular orbit velocity at apogee and subtracting the difference from delta V_2 (circular), as indicated.

In the case of the two-burn deorbit (top curve in Figure 3-3), the initial burn is at the 100 nmi perigee of the elliptical orbit. This portion of delta V_2 is determined using the perigee velocity equation given and subtracting the circular velocity at 100 nmi altitude. The total delta V_2 is obtained by adding the required delta V to deorbit from a 100 nmi circular altitude.

Continuing with the AXAF placement example, deorbit from 320 nmi circular altitude would require 518 fps (Ex. 1 - Baseline) while deorbit from a 288 nmi by 100 nmi altitude (tethered approach) would require 605 fps (Ex. 2A) if the 100 nmi intermediate circular orbit were used and only 145 fps (Ex. 2B) if the direct descent from apogee were used.

Knowing the sum of the insertion delta velocity (delta V_1) and the deorbit delta velocity (delta V_2) for a tethered approach vs. the baseline approach allows a good initial estimate of propellant requirements and resulting savings. (Second order variations caused by differences between other on-orbit delta velocity requirements are ignored in this analysis.) To obtain OMS propellant required it is necessary to obtain Shuttle payload capability and the resulting initial Shuttle weight prior to the first OMS burn.

Table 3-4 outlines the procedure to obtain initial Orbiter weight, using the example of the AXAF placement mission (baseline approach).

REFERENCES -

- o PERFORMANCE ESTIMATION TECHNIQUE FOR SPACE SHUTTLE DIRECT ORBIT INSERTION MISSIONS, JSC, OCT. 82.
- o SHUTTLE SYSTEMS WEIGHT AND PERFORMANCE
  - MONTHLY STATUS REPORT, JSC, 18 MAY 1982, OV 103 (USED TO OBTAIN ORBITER EMPTY WT. AND E.T. EMPTY WT.)

STS GROUND RULES -

- o ETR, DIRECT INSERTION
  Q_{MAX} = 710 PSF
  FILAMENT - WOUND CASES
  109% POWER, SUMMER LAUNCH

MISSION -

- o CARGO WT, APOGEE ALTITUDE, ORBIT INCLINATION
  (EXAMPLE USED TO SHOW PROCEDURE:
  AXAF - 20000 LB CARGO TO 320 NMI CIRCULAR AT 28.5 DEG)

LIFT CAPABILITY DETERMINATION (VALUES WITH * ARE MISSION DEPENDENT)

1.	NOMINAL MECO WEIGHT	351592 (LB)
2.	ADJUSTMENT FOR APOGEE AND INCLINATION	-3527*
3.	MECO INJECTED WEIGHT	348065*
4.	MPS AT MECO	-13901
5.	ET NON-PROPULSIVE CONSUMABLES	-423
6.	ET EMPTY	-69927
7.	OMS LOAD	-25064
8.	RCS LOAD	-7508
9.	SSME EMPTY	-20816
10.	ORBITER EMPTY	-142483
11.	ORBITER NON-PROPULSIVE CONSUMABLES	-5409
12.	PERSONNEL	-3614
13.	STS OPERATOR	-4219
14.	LIFT CAPABILITY	54701 (LB)*
15.	STS OPERATIONS RESERVE	-3000
16.	PAYLOAD REQUIREMENT	-20000*
17.	PAYLOAD MARGIN	31701 (LB)*

ORBITER INITIAL WEIGHT (W_0)

W_0 = W(3) - W(4) - W(5) - W(6) - W(11) - W(17) = 226704*

(ABOVE WEIGHTS W(4), W(5), ETC. USED IN POSITIVE SENSE)

Table 3-4 Orbiter Initial Weight Determination

The table also shows the weights used for the AXAF direct insertion baseline mission to a 320 nmi circular orbit, with an asterisk placed by the weights that are strictly dependent upon the mission. The nominal MECO weight of 351,592 lb for the assumed conditions is adjusted for the specific mission altitude and results in a MECO injected weight of 348,065 lb. All of the non-cargo weight items are then subtracted to obtain the lift capability for this mission (54,701 lb). The lift capability is reduced by standard STS operations reserve (3000 lb) and the specific payload requirement (20,000 lb AXAF) to obtain a payload margin of 31,701 lb. (for this analysis ASE weight was not included since it has a second order effect on the OMS propellant requirement calculation).

At this point the Orbiter initial weight (W_o) can be determined by taking the MECO initial weight W(3) and subtracting the residual MPS propellants at MECO W(4), the E.T. non-propulsive consummables W(5), the E.T. empty weight W(6), the Orbiter non-propulsive consummables W(11), and the payload margin W(17). This procedure then results in a first order approximation of Orbiter initial weight (W_o) for use in the OMS propellant requirement calculations.

Figure 3-4 is the final chart in the Shuttle performance series and allows determination of OMS propellant requirements and savings for various missions and mission approaches. OMS propellant increment required is shown as a function of the summation of delta V (delta V_1 + delta V_2 from Figures 3-2 and 3-3 respectively) for a parametric range of initial Orbiter weights (W_o). Since the abort situation is required and no weight leaves the Orbiter (other than OMS propellant), the propellant increment is determined by the given equation, using the total delta velocity, OMS engine specific impulse, and initial Orbiter weight. Note that a 7.5% margin is added for OMS propellant reserve, in all cases.

Continuing with the AXAF placement example, the highest OMS propellant requirement (23,500 lb) corresponds to Ex. 1 (baseline approach.) Using the tethered approach with deorbit via the 100 nmi intermediate circular orbit (Ex. 2A) results in an 18,400 lb propellant requirement. A direct deorbit from apogee of the elliptical orbit (Ex. 2B) requires the least OMS propellant (7500 lb) and is the tether approach chosen for later comparison with the baseline approach. (The technique of a direct deorbit from apogee of an elliptical orbit has been discussed informally with MPAD personnel at JSC and is considered a feasible and promising technique).

3.1.3.2 OMV and OTV Performance

Throughout the Phase 2 study continuing consultations have been conducted with the Martin Marietta Denver OMV and OTV study teams to obtain reasonable estimates of representative vehicle characteristics and capabilities to allow comparisons between baseline and tethered approaches with these vehicles.

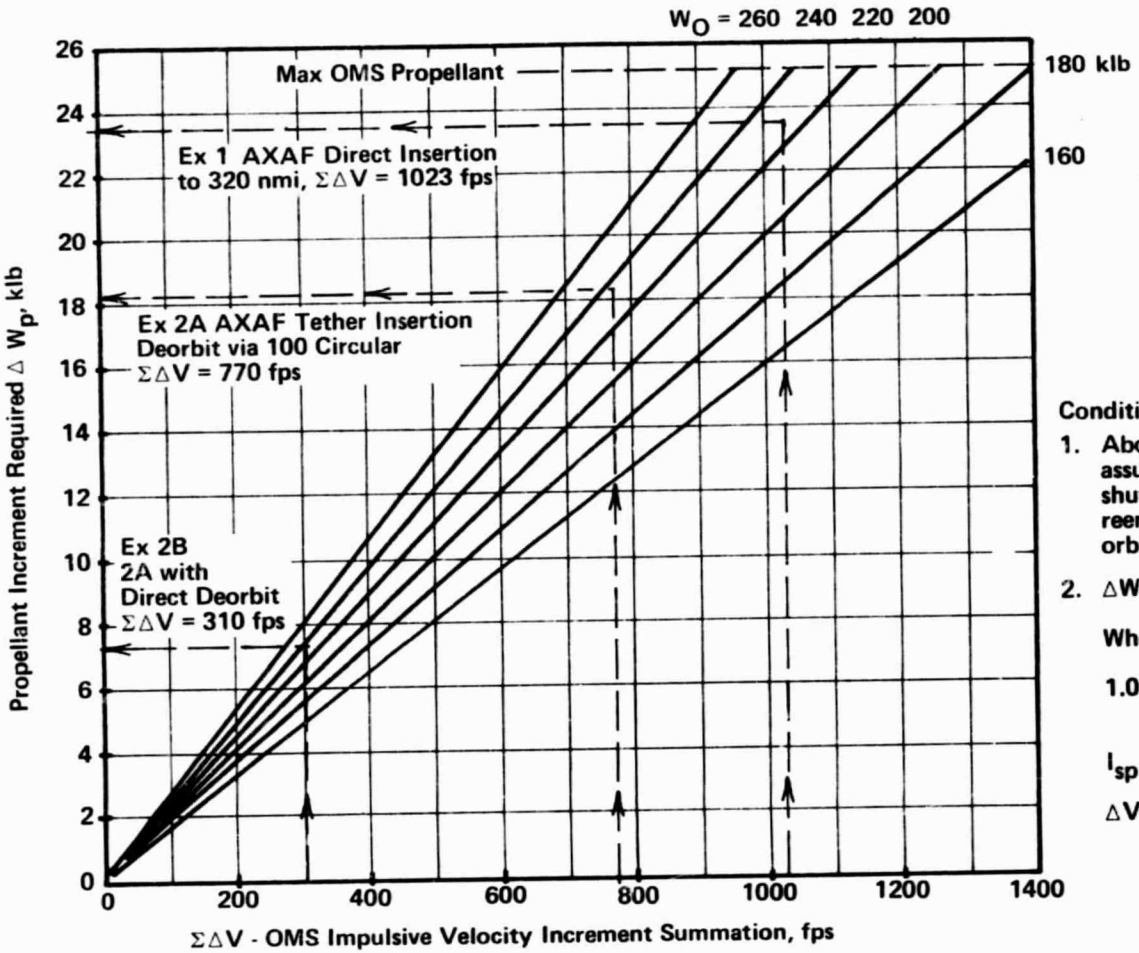

Note:

W_o = Shuttle weight with cargo at start of initial OMS burn.

Conditions:

1. Abort situation assumed, where shuttle must reenter from orbit with cargo.
2. $\Delta W_P = 1.075\, W_o\, [1 - e^{(-\Delta V/g I_{sp})}]$

   Where

   1.075 = Factor for OMS propellant margin

   I_{sp} = 313.2 sec

   $\Delta V = \Sigma\Delta$ from prior charts.

Figure 3-4 Shuttle OMS Propellant Requirements/Savings

The basic considerations used for this part of the analysis are summarized in Table 3-5 for both the OMV and OTV vehicles. General considerations (applying to both vehicles) include off-loading propellant as required for a mission and generally comparing tethered and baseline approaches on the basis of propellant savings. All launches are from the Space Station (270 nmi) to a higher altitude (Space Station angular momentum consumption) and a maximum tether length (static releases) of 150 km is considered. Candidate missions are treated as delivery missions (or equivalent) with the empty stage returning to the Space Station. Impulsive delta velocity calculations are assumed.

A recent version of the Martin Marietta Aerospace OMV was used to obtain vehicle characteristics. All OMV launches are in-plane. All tether launches of the OMV are designed to deliver the OMV/Payload stack to an apogee corresponding to the final desired orbit altitude. (Eliminates first OMV burn).

The estimated characteristics of the Martin Marietta Aerospace Aft Cargo Carrier (ACC) OTV were used for comparison purposes. All tether candidate missions are launches to geosynchronous orbit (all plane changes at geo) and an aerobraked return to the Space Station is always used. The impulsive delta velocities used are 14,091 fps (ascent to geo, including losses, etc.) and 6445 fps (descent from geo, including 400 fps for phasing, etc). In this application a tethered launch reduces the first delta velocity requirement, as will be shown.

Table 3-6 summarizes the estimated vehicle characteristics of both the OMV and OTV vehicle used in the analysis. The OMV version uses nitrogen tetroxide/monomethyl hydrazine bipropellant with a specific impulse of 306 sec. and an initial full-fueled weight of 14,600 lb. The burnout weight of 6,525 lb includes a fixed allowance of 5% for RCS plus propellant margins. A usable propellant weight of 8075 lb (maximum) was assumed. (This data was received in November 1984 and recently the decision was made to select the tank sizes for a loaded propellant weight of 6,700 lb, with corresponding burnout weight changes. Since these changes do not impact the conclusions of the study, the analysis was not revised).

The (ACC) OTV version uses a liquid oxygen/liquid hydrogen cryogenic propellant combination with a specific impulse of 460 sec. The fully loaded initial weight is 60,011 lb. with a maximum usable propellant of 53,577 lb. The burnout weight of 6,434 lb includes the aerobraking system and an allowance for RCS and propellant margins.

GENERAL

- OFF-LOAD PROPELLANT AS REQUIRED FOR MISSIONS
- COMPARE MISSIONS ON BASIS OF PROPELLANT SAVINGS
- STATIC TETHER RELEASES UP TO 150 KM (81 NMI) LENGTH
- ALL LAUNCHES FROM SPACE STATION TO HIGHER ALTITUDE
- IMPULSIVE ΔV CALCULATIONS
- ASSUME DELIVERY MISSIONS WITH STAGE RETURN TO SS

OMV

- USE APPROXIMATE CHARACTERISTICS OF CURRENT MARTIN MARIETTA AEROSPACE VERSION OF OMV
- IN-PLANE LAUNCHES
- TETHER LAUNCH OMV TO APOGEE OF DESIRED ORBIT ALTITUDE

OTV

- USE ESTIMATED CHARACTERISTICS OF MARTIN MARIETTA AEROSPACE AFT CARGO CARRIER (ACC) OTV.
- AEROBRAKED RETURN FROM GEOSYNCHRONOUS MISSIONS, PLANE CHANGE AT APOGEE
- USE ΔV_1 (ASCENT TO GEO) = 14091 FPS (INCLUDES 350 FPS--LOSSES, ETC.)
  ΔV_2 (DESCENT FROM GEO) = 6445 FPS (INCLUDES 400 FPS--PHASING, ETC.)
- TETHER LAUNCH REDUCES ΔV_1 REQUIREMENTS

Table 3-5 OMV and OTV Considerations

OMV(1)

W_{Dry} (LB)	$W_{Burnout}$ (LB)	$W_{P_{Usable}}$ (LB)	$W_{Initial}$ (LB)	I_{sp} (SEC)	PROPELLANT
6100	6525(2)	8075	14600	306	N_2O_4/MMH

(1) USES CURRENT ESTIMATED CHARACTERISTIS OF MARTIN MARIETTA AEROSPACE STORABLE BIPROPELLANT ORBITAL MANEUVERING VEHICLE (OMV).

(2) INCLUDES 5% ALLOWANCE FOR RCS PLUS PROPELLANT MARGINS.

OTV(3)

W_{Dry} (LB)	$W_{Burnout}$ (LB)	$W_{P_{Usable}}$ (LB)	$W_{Initial}$ (LB)	I_{sp} (SEC)	PROPELLANT
5862	6434(4)	53577	60011	460	LO_2/LH_2

(3) USES APPROXIMATE CHARACTERISTICS OF MARTIN MARIETTA AEROSPACE AFT CARGO CARRIER (ACC) OTV AT SPACE STATION.

(4) INCLUDES ALLOWANCE FOR RCS AND PROPELLANT MARGINS.

Table 3-6 OMV and OTV Estimated Vehicle Characteristics

DEFINITIONS

ΔV_1 = ASCENT ΔV REQUIRED ; W_{PL} = PAYLOAD WEIGHT

ΔV_2 = RETURN ΔV REQUIRED ; W_{BO} = BURNOUT WEIGHT

M_i = MASS RATIO = $e^{\Delta V_i / g I_{sp}}$; W_{PU} = USABLE PROPELLANT WEIGHT

OMV

BASELINE (UNTETHERED)
- o ΔV_1 AND ΔV_2 OBTAINED FROM STANDARD ORBIT EQUATIONS FOR ORBIT DESIRED

EQN. (1)
- o W_{PU} (REQUIRED) $= W_{PL}(M_1-1) + W_{BO}(M_2M_1-1)$ FOR SELECTED PAYLOADS AND FINAL ORBIT ALTITUDES

TETHERED APPROACH
- o LENGTH OF TETHER VARIED TO OBTAIN SPECIFIC APOGEE. FIRST PERIGEE BURN IS ELIMINATED AND APOGEE BURN IS REDUCED SINCE PERIGEE IS HIGHER
- o W_{PU} (SEE EQN. 1) FOR VARYING TETHER LENGTHS

OTV

BASELINE (UNTETHERED)
- o ΔV_1 AND ΔV_2 FIXED FOR GEO MISSION
- o W_{PU} (SEE EQN. 1) FOR VARYING PAYLOADS

TETHERED APPROACH
- o LENGTH OF TETHER VARIED, CHANGE IN LAUNCH ALTITUDE AND VELOCITY DETERMINING ORBITAL EQUIATIONS USED TO OBTAIN NEW ΔV_1 VALUES.
- o W_{PU} (SEE EQN. 1) FOR VARYING PAYLOADS/TETHER LENGTHS

(1) SEE APPENDIX A FOR DETAILED DERIVATIONS

Table 3-7 OMV and OTV Performance Characteristics

OMV and OTV performance equations for determination of propellant loading requirements for baseline and tethered launches are summarized in Table 3-7, with detailed derivations given in Appendix A. Delta V requirements are determined using tether transportation relationships (Table 3-3) and standard orbit equations. Tether launches primarily reduce (OTV) or eliminate (OMV) the perigee burn requirement with some further reduction in the first apogee burn requirement due to the increased perigee altitude (both of which reduce delta V_1). Return velocity requirements (delta V_2) are not affected. Propellant loading requirements (W_{pu}) are determined using the payload weight, stage burnout weight, and mass ratio relationships shown in Equation 1.

Figure 3-5 summarizes parametrically the OMV propellant requirements for covering the selected mission set of candidates. Note that the chart only extends to about 3,200 lb of usable propellant loaded, which is only 40% of the maximum propellant load. Offloading of propellant for missions is generally the rule, since the design performance missions for sizing the OMV require much higher performance but do not occur as frequently. Propellant requirements are shown for both baseline missions (solid curve) and tethered OMV missions (dashed curve) for altitudes from 270 nmi up to 400 nmi and payloads from 0 to 60,000 lb.

Figure 3-6 shows the significant propellant savings for the tethered approach over the baseline approach. Those savings approach 50% for payloads in the 20,000 lb and above category and are at least 30% for payloads below 20,000 lb, with appropriate tether length requirements indicated as a function of payload and final orbit altitude. In terms of propellant saved, the amount varies from a few hundred pounds to over 1000 lb, depending upon the mission. Although the savings in propellant is significant, the total number of missions involved is small, as shown in the mission model.

In Figure 3-7, parametric data are shown for OTV usable propellant requirements for selected payloads (0 to 20,000 lb) as a function of tether lengths from 0 (untethered) to 150 km (maximum considered). As for the OMV, offloading of propellant is generally required for those missions also, but the average propellant loading is higher (about 60%) over the mission set.

Figure 3-8 displays the propellant savings for the tethered approach over the baseline approach. Attention should be drawn to the 150 km length tether curve since it was selected for all OTV launches, as the study progressed. Although the propellant savings appears small (8%), the amount of propellant is very significant (over 4,000 lb saved for the 20,000 lb payload mission), and a large number of missions are involved (69) over the 6-year period of interest (1995-2000), as will be discussed later.

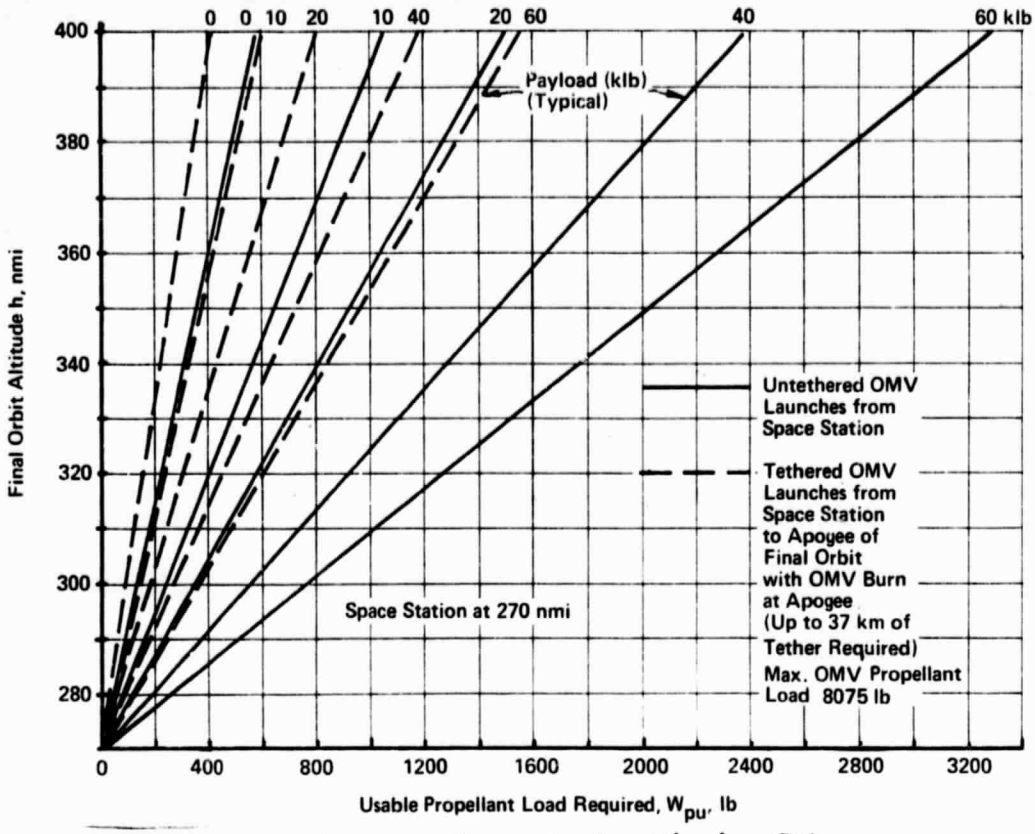

Figure 3-5 OMV Propellant Requirements for Mission Set

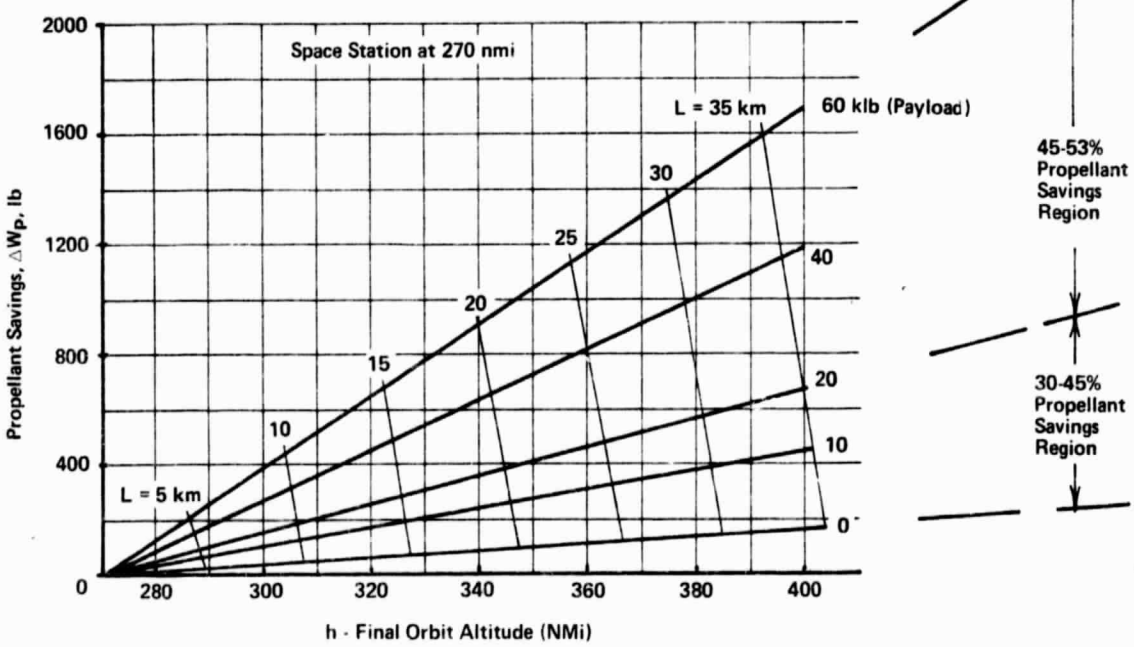

Figure 3-6 OMV Propellant Savings from Tether Launches

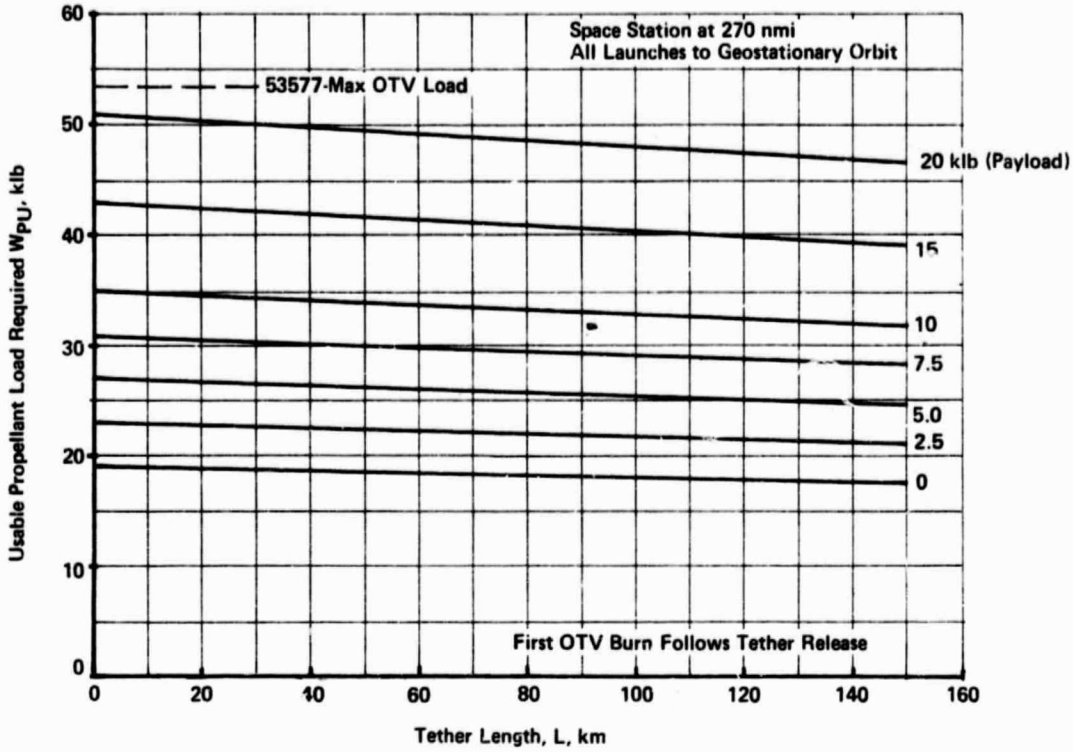

Figure 3-7 OTV Propellant Requirements for Mission Set

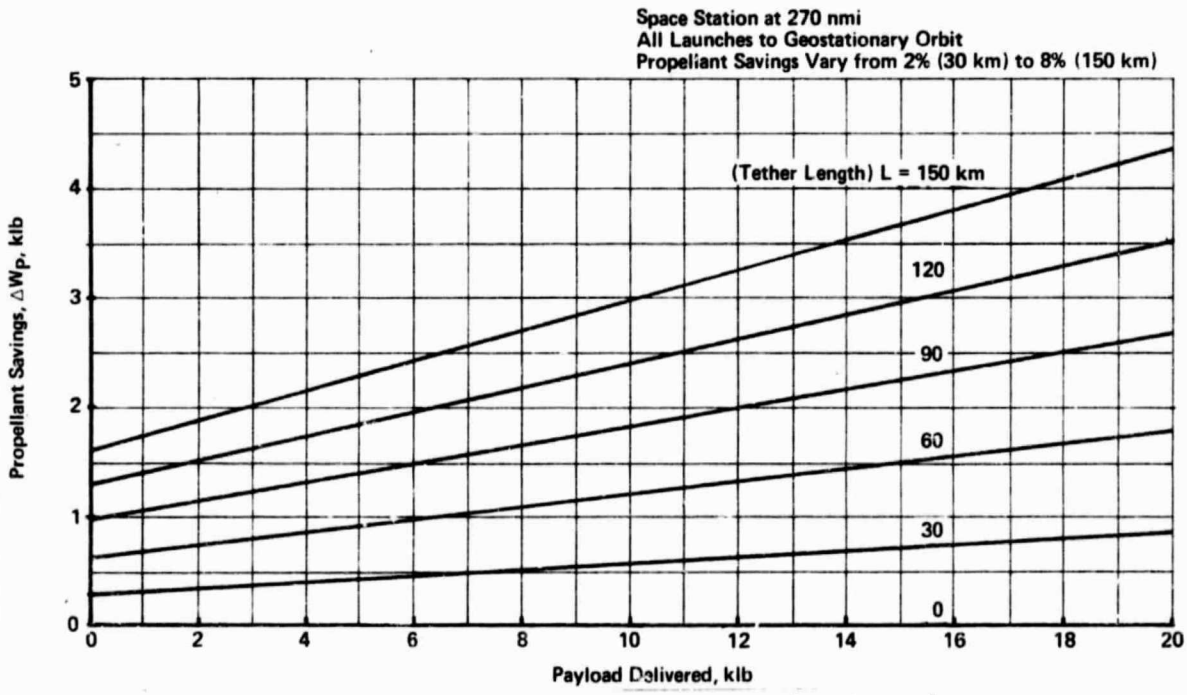

Figure 3-8 OTV Propellant Savings from Tether Launches

3.1.3.3 Space Station Performance

In the previous portions of this subsection on performance characteristics, tools have been developed to compare tether applications with baseline approaches for the Shuttle, OMV, and OTV and also to obtain the effects of tether mission applications on Space Station angular momentum. In like manner, the Space Station performance requirements must also be considered. In this context, Space Station performance can be thought of in terms of the energy (or propellant) required to keep the station at its nominal altitude.

The ground rules for all analyses involving the Space Station are summarized in Table 3-8. The nominal mass assumed is 551,000 lb (250,000 kg) and the nominal orbit is 270 nmi (500 km) at an orbit inclination of 28.5 deg. The corresponding nominal Space Station angular momentum ($MR^2\Omega$) is 9.652403×10^{15} slug-ft^2/sec (1.309055×10^{16} kg - M^2/sec). The desired allowable orbit altitude excursion due to tether operations is 250 to 300 nmi, but these limits may be exceeded for short periods by scheduling subsequent Space Station momentum balance operations. Nominal orbit stationkeeping (drag makeup) maneuvers are assumed to be made at least every 90 days (or quarter year). Tether transportation operations (tether launches of OTV, etc, and tether deployment of the Shuttle or other applications) will be conducted in a manner to minimize orbit stationkeeping propellant usage. Momentum balance operations will also be planned to have the Space Station near the lower end of its altitude limits (250 nmi to 270 nmi) for Shuttle revisits to maximize the payload weight that the Shuttle can deliver. The latter guideline could be made more flexible if the Shuttle payload weight capability is not fully utilized (due to manifesting and volume constraints) for Shuttle revisits to the Space Station.

The Space Station orbit stationkeeping propellant requirements, obtained through consultation with Martin Marietta Denver Space Station study personnel, are presented in Table 3-9. The average quarterly propellant requirements are based on a hydrazine monopropellant system (I_{SP} = 230 sec) and reflect the projected air density variations at 270 nmi during the solar cycle for the years 1991 through 2000. Quarterly average propellant requirements start at a maximum (near the peak of the 11-year sun spot cycle) of 2890 lb/qtr in 1991, reach a minimum of 280 lb/qtr in 1997, and are again approaching the next maximum 2455 lb/qtr) during the year 2000. These values can vary appreciably, depending upon the propellant chosen or the degree of conservatism in atmospheric model selection. They should be thought of as representative values only, and are not critical to the conclusions of this study, later discussed.

The final column on Table 3-9 shows the equivalent altitude loss of a typical Space Station configuration, if no orbit stationkeeping maneuvers are made during the quarter (averaged over the particular year). This data is used in the benefits analysis (3.4).

- o NOMINAL MASS 551,000 LB (250,000 KG)
- o NOMINAL ORBIT 270 NMI (500 KM)
  28.5 DEG. INCLINATION
- o NOMINAL ANGULAR MOMENTUM 9.652403×10^{15} SLUG-FT^2/SEC.
  (1.309055×10^{16} KG - M^2/SEC.)
- o ALLOWABLE ORBITAL EXCURSION DUE TO TETHER OPERATIONS - 250 TO 300 NMI. DESIRED*
- o NOMINAL ORBIT STATIONKEEPING INTERVALS - 90 DAYS OR LESS
- o CONDUCT TETHER LAUNCH, ORBITER DEPLOYMENT, AND OTHER TETHER TRANSPORTATION OPERATIONS TO MINIMIZE ORBIT STATIONKEEPING PROPELLANT
- o SPACE STATION ALTITUDE AT SHUTTLE REVISIT - 250 TO 270 NMI DESIRED

*THESE LIMITS MAY BE EXCEEDED ON SPECIFIC TETHER TRANSPORTATION MISSIONS, BUT PLANNED SPACE STATION MOMENTUM BALANCE OPERATIONS WILL LIMIT THE TIME OF EXCURSION.

Table 3-8 Space Station Ground Rules

o SPACE STATION AT 270 NMI ALTITUDE

YEAR	AVE. PROPELLANT (N_2/H_4) REQUIRED PER QUARTER (1) (LB)	EQUIVALENT ALTITUDE LOSS PER QUARTER (NMI)
1991	2890	12
1992	2750	11
1993	1880	8
1994	1080	5
1995	605	3
1996	395	2
1997	280	1
1998	330	1
1999	1145	5
2000 (EST)	2455	10

(1) REFERENCE: INTERNAL COMMUNICATION ON SPACE STATION PROPELLANT CONSUMPTION, G. McALLISTER, 14 DECEMBER 1984.

Table 3-9 Space Station Orbit Maintenance Requirements

3.2 Comparison Format

The comparison format for evaluating the tethered concepts vs. the baseline approaches (Sect. 3.3) evolved throughout the Phase 2 study. The primary purpose is to make as many direct quantitative comparisons as possible to eventually lead to cost comparisons in follow-on study phases as the selection process narrows. Because of the early state of study or development of the baseline configurations (OMV, OTV, and Space Station) and the tethered concepts, qualitative comparisons are also made, based on subjective engineering assessment. In addition to quantitative and qualitative comparisons, final remarks highlight the benefits or penalties incurred by the tethered approach to the particular mission.

Quantitative comparison criteria include the tethered orbit parameters (e.g., initial, pre-release, post-release, and final orbits), the propellant usage of the Shuttle, OMV, OTV, Space Station, and end effector (i.e., PIDM or SIDM), as applicable, and tether length required. Additional tether system parameters include the maximum tether tension, the energy usage for deployment and retrieval, and the estimated tether system weight. Space Station angular momentum gain or loss is also evaluated, as well as the operational time comparison with the baseline approach.

Qualitative comparison criteria include rough estimates of operations and hardware complexity, mission success risk, technology risk, launch (or propellant) cost factor, and hardware development cost factor. These qualitative comparisons are useful, but subjective, and attempt to estimate the percent change from the baseline approach.

Throughout the quantitative and qualitative comparisons, evaluations and comments are made where applicable. The final remarks section summarizes the main points of the comparison between the selected tethered concept with the best estimate of the likely baseline approach and points out the primary advantages and disadvantages.

3.3 Comparison Results

3.3.1 Tether Assisted Deployment of 220 klb Shuttle from the Space Station-Maximum Mass Deployment Case - Concept A2

A comparison of the tethered deployment of a departing shuttle (Concept A-2) with the baseline approach of undocking and deboosting from the vicinity of the Space Station is presented in Table 3-10. Approximately 35 nmi (64.3 km) of tether is required to provide a 100 nmi perigee for the Shuttle after tether release. As the Shuttle is deployed below, the Space Station rises from 270 nmi altitude to 280 nmi altitude, while the Shuttle is lowered to an altitude of 245 nmi. During deployment, excess OMS propellant is transferred from the integral OMS tanks into the scavenging tanks on the SIDM. After Shuttle release, the Space Station moves into a 280 nmi x 340 nmi elliptical orbit (average altitude raised by 40 nmi) and the orbiter moves into a 100 nmi x 245 nmi elliptical orbit. At a subsequent return to apogee, after the Shuttle cargo bay doors are closed, the deorbit burn is executed.

MISSION: A2 - TETHER ASSISTED DEPLOYMENT OF 220 KLB SHUTTLE FROM THE SPACE STATION - MAXIMUM MASS DEPLOYMENT CASE

CRITERIA	BASELINE APPROACH	TETHERED CONCEPT	COMPARISON	EVALUATION/COMMENTS
I. QUANTITATIVE MISSION CRITERIA				
A. ORBITS (NMI AT 28.5 DEG. INCL)				
o INITIAL ORBIT	270x270	270x270		
PRE-RELEASE OR PRE-RENDEZVOUS ORBITS				
o DEPLOYER (SPACE STATION)	N/A	280x280		SPACE STATION MASS - 551 KLB
o DEPLOYED MASS (SHUTTLE)	N/A	245x245		ORBITER MASS - 220 KLB
o (TETHER LENGTH - NMI)	N/A	(35)		
POST-RELEASE OR POST-RENDEZVOUS ORBITS				
o DEPLOYER	N/A	280x340		AVE. SPACE STATION ALT. RAISED 40 NMI
o DEPLOYED MASS	N/A	100x245		
FINAL ORBITS				AVE. SS ALT. KEPT BELOW 300 NMI VIA
o DEPLOYER	270x270	280x340		OTV LAUNCHES AND DRAG DECAY
o DEPLOYED MASS	270x270	100x245		ASSUMES DEORBIT FROM APOGEE FOR TETHERED CASE
B. PROPELLANT USAGE (LB)				
o SHUTTLE ORBITER	10100	3600	+6500	DURING DEORBIT ONLY. SAVES 6500 LB.OF N_2O_4/MMH FOR SS USE WITH SCAVENGING SYSTEM
o OMV				
o OTV				
o SPACE STATION	5500(Est)	0	+5500	SAVES APPROX. 5500 LB. OF N_2H_4 ORBIT STATION KEEPING PROP. ANNUALLY (AVE.)
o END EFFECTOR (PIDM OR SIDM)	N/A	<500	- 500	SMALL COLD GAS PENALTY
C. TETHER SYSTEM				
o MAXIMUM TENSION (LB)	N/A	3854 (17144N)		CORRESPONDS TO 2.3 FACTOR OF SAFETY
ENERGY USAGE (KWH)				
o DEPLOYMENT	N/A	153	+ 153	SS DISPOSES 153 KWH IN 4-6 HRS.
o RETRIEVAL	N/A	11	- 11	SS SUPPLIES 11 KWH IN 4-6 HRS.[1]
o SYSTEM WEIGHT (LB)	N/A	25000	-25000	ESTIMATED SS REUSABLE TETHER SYSTEM DEPLOYER WEIGHT
D. SPACE STATION MOMENTUM				1.309060×10^{16} KG-M^2/SEC (REFERENCE)
o MOMENTUM GAIN (KG-M^2/SEC)	0	$+6.99 \times 10^{13}$	$+6.99 \times 10^{13}$	0.53% INCREASE IN SS ANGULAR MOMENTUM
E. OPERATIONAL TIME[2] (HRS.)	2.0(Est)	16.0(Est)	-14 (Est)	ADD'L. 14 HRS. REQUIRED FOR TETHER APPROACH
II. QUALITATIVE MISSION CRITERIA				
A. COMPLEXITY (0-2)				
o OPERATIONS	1.0	1.2 - 1.5	+.2 to .5	20% TO 50% MORE OPS. COMPLEXITY
o HARDWARE	1.0	1.2 - 1.5	+.2 to .5	20% TO 50% MORE HDW. COMPLEXITY
B. RISKS (0-2)				
o MISSION SUCCESS	1.0	1.0	0.0	SAME AS BASELINE APPROACH
o TECHNOLOGY	1.0	1.25	+.25	25% MORE TECHNOLOGY RISK
C. COST FACTOR (0-2)				
o LAUNCH	1.0	1.10-1.20	.10 to .20	10 TO 20% INCREASE IN DEPLOY. COST[3]
o HARDWARE DEVELOPMENT	1.0	1.20	.20	20% MORE HDW. DEVELOPMENT COST

NOTES: 1) POWER REQUIRED FOR FULL LENGTH TETHER RETRIEVAL (64 KM) OF SHUTTLE INTERFACE DEPLOYMENT MODULE (SIDM) FULL OF SCAVENGED OMS PROPELLANT (9500 LB. TOTAL)

2) TIMES ARE ESTIMATED FROM THE POINT WHERE THE SHUTTLE IS READY TO MOVE AWAY FROM THE SPACE STATION.

3) DOES NOT CONSIDER OMV AND SPACE STATION ORBIT STATIONKEEPING PROPELLANT SAVINGS

Table 3-10 Comparison of Concept A2 with Baseline Approach

As the Space Station moves into its new orbit the SIDM with its 6500 lb load of scavenged OMS propellant is gradually retrieved by the tether for storage of the propellant and SIDM in separate areas on the Station for later usage. During the next 90 day (or shorter) period, the Space Station will lose some altitude due to drag decay, but the major reduction in altitude will be caused by one or more tether assisted OTV launches, and/or possibly from electrodynamic drag induced by an electrodynamic tether power generation period. By the next Shuttle revisit the Space Station should again be in the 250-270 nmi altitude regime.

The 6500 lb of scavenged OMS propellant results from the fact that the baseline approach requires about 10,100 lb of OMS propellant to achieve an untethered deorbit from the Space Station, compared to only 3600 lb for deorbit from apogee after tether release. As indicated in Table 3-9, an average of approximately 5500 lb of Space Station orbit stationkeeping propellant (hydrazine) could also be saved (annually) by tethered Shuttle deployment operations over the 10-year time period (1991-2000). A small cold gas penalty (less than 500 lb) would be incurred during tether retrieval operations with the fully loaded SIDM (9,500 lb including scavenged propellant).

The maximum tether tension reached at full deployment is 3854 lb (17,144 N). Although this is the maximum tether operation from the standpoint of deployed mass, the tension is slightly less than the deployed OTV/payload case (Concept F), since the OTV launch uses 150 km of tether (vs. 64.3 km for Shuttle deployment). Energy usage during deployment is 153 kWh (to be dispositioned on the Space Station in 8 hrs or less), while only 11 kWh needs to be supplied by the Space Station to the tether deployer system during retrieval. The tether deployer system weight is estimated at 25,000 lb, including 13,900 lb of tether mass (150 km plus 5% margin of 0.32 inch diameter Teflon jacketed Kevlar). This system is used for all tether operations on the Space Station and will have many reuses over the 10-year mission time period.

The tethered Shuttle deorbit operation also causes the largest angular momentum change on the Space Station (0.53% increase), and corresponds to the 40 nmi average increase in altitude. The Space Station momentum decrease caused by a maximum payload launch of an OTV (Concept F) is almost equal and opposite to this concept (A-2). Total operational time with the tether approach would be approximately 16 hrs, compared to 2 hrs or less for the baseline approach.

Table 3-10 presents the Concept A-2 qualitative mission criteria comparisons with the baseline approach. The operations complexity and also the hardware complexity are felt to be from 20% to 50% more complex for the tethered approach since no additional hardware is involved for the baseline case and operations are less involved. No additional mission success risk is anticipated but the technology risk could be about 25% greater than the baseline approach. There could be a 10% to 20% increase in deployment cost, but this does not consider the scavenged OMS propellant savings (usable for OMV operations) or the Space Station orbit stationkeeping propellant saved, which will be covered in 3.4. Hardware development cost is estimated to increase by 20%.

Overall, the increase in Space Station momentum allows tethered OTV launches with further savings in OTV propellant (Concept F) and also eliminates the need for an average annual Space Station usage of 5500 lb of hydrazine for orbit stationkeeping to counter aerodynamic drag effects at the nominal altitude of 270 nmi. Scavenging of 6500 lb of OMS propellant (nitrogen tetroxide/monomethyl hydrazine) with every full length Shuttle tether deployment reduces transportation requirements for delivering OMV propellant (same propellant as OMS) to the Space Station.

3.3.2 Tether Assisted Launch of 20,000 lb OTV Payload to Geosynchronous Orbit - Concept F

Concept F was added during the Phase II portion of this study and is the prime user of the Space Station angular momentum increase provided by the tethered Shuttle deployment concept discussed previously in 3.3.1. The 20,000 lb payload launch was chosen since it represents the maximum size payload in the OTV mission model and also designs the tether system. Table 3-11 presents the comparison of the tethered launch (above the Space Station) with the baseline approach, which involves the use of an OMV to take the OTV away from the Space Station for launch.

A tether length of 150 km (81 nmi) was chosen, based on the ground rule of maximum length and a tether tension that is about the same as the tethered Shuttle deployment case. As the OTV/payload stack is deployed above it, the Space Station descends from 270 nmi altitude to 261 nmi altitude, while the OTV reaches an altitude of 342 nmi. After OTV release, the Space Station moves into a 204 nmi x 261 nmi orbit (average altitude reduction of about 38 nmi) and the OTV moves momentarily into a 342 nmi x 801 nmi orbit (the perigee burn for geo transfer could commence immediately after release from the tether or at a later perigee).

MISSION: F - TETHER ASSISTED LAUNCH OF 20000 LB OTV PAYLOAD TO GEOSYNCHRONOUS ORBIT FROM THE SPACE STATION				
CRITERIA	BASELINE APPROACH	TETHERED CONCEPT	COMPARISON	EVALUATION/COMMENTS
I. QUANTITATIVE MISSION CRITERIA				
A. ORBITS (NMI AT 28.5 DEG. INCL)				
o INITIAL ORBIT	270 x 270	270 x 270		
PRE-RELEASE OR PRE-RENDEZVOUS ORBITS				
o DEPLOYER (SPACE STATION)	N/A	261 x 261		
o DEPLOYED MASS (OTV/PAYLOAD	N/A	342 x 342		
o (TETHER LENGTH - NMI)	N/A	(81)		
POST-RELEASE OR POST-RENDEZVOUS ORBITS				
o DEPLOYER	N/A	261 x 20[illegible]		AVERAGE SS ALTITUDE DROP OF 37.5 NMI
o DEPLOYED MASS	N/A	342 x 801		ORBITAL ELEMENTS BEFORE PERIGEE BURN TO GEO.
FINAL ORBITS				
o DEPLOYER	270 x 270	261 x 204		AVE. SS ALTITUDE KEPT AT 250 NMI OR ABOVE VIA TETHERED ORBITER DEPLOYMENTS
o DEPLOYED MASS	GEOSYNCH	GEOSYNCH		
B. PROPELLANT USAGE (LB)				
o SHUTTLE ORBITER				
o OMV	133	N/A	+133	COLD GAS USAGE FOR OTV PLACEMENT/RET.
o OTV[1]	51158	46856	+4302	OVER 8% OF OTV PROPELLANT SAVED
o SPACE STATION				
o END EFFECTOR (PIDM OR SIDM)	N/A	<500	-500	SMALL COLD GAS PENALTY
C. TETHER SYSTEM				
o MAXIMUM TENSION (LB)	N/A	3970 (17660N)		TETHER DESIGN CONDITION - 2.2 SAFETY FACTOR
ENERGY USAGE (KWH)				
o DEPLOYMENT	N/A	366	+366	SS DISPOSES 366 KWH IN 4-6 HRS.
o RETRIEVAL	N/A	29	- 29	SS SUPPLIES 29 KWH IN 4-6 HRS.
o SYSTEM WEIGHT (LB)	N/A	25000	-25000	ESTIMATED SS REUSABLE TETHER SYSTEM DEPLOYER WEIGHT
D. SPACE STATION MOMENTUM				1.309060×10^{16} KG-M^2/SEC (REFERENCE)
o MOMENTUM GAIN (KG-M^2/SEC)	0	-6.69×10^{13}	-6.69×10^{13}	0.51% REDUCTION IN SS ANGULAR MOMENTUM
E. OPERATIONAL TIME (HRS.)	5.0 EST.	16.0 EST	-11.0 EST	11 HR. INCREASE IN OPERATIONAL TIME FOR TETHERED APPROACH
II. QUALITATIVE MISSION CRITERIA				
A. COMPLEXITY (0-2)				
o OPERATIONS	1.0	1.1 - 1.2	+.1 TO .2	10% TO 20% MORE OPS. COMPLEXITY
o HARDWARE	1.0	1.1 - 1.2	+.1 TO .2	10% TO 20% MORE HDW. COMPLEXITY
B. RISKS (0-2)				
o MISSION SUCCESS	1.0	1.0 - 1.05	0 TO .05	0 TO 5% MORE MISSION SUCCESS RISK
o TECHNOLOGY	1.0	1.0	0	SAME TECHNOLOGY RISK
C. COST FACTOR (0-2)				
o LAUNCH[2]	1.0	0.9-0.8	-.1 TO -.2	10% TO 20% REDUCTION IN LAUNCH COST[3]
o HARDWARE DEVELOPMENT	1.0	1.05	.05	5% INCREASE IN HDW. DEVELOPMENT COST

NOTES: 1) ASSUME ALL OF 28.5 DEG. PLANE CHANGE AT APOGEE OF TRANSFER ORBIT FOR FIRST APPROXIMATION.

2) BASED ON GETTING THE OTV FROM THE SPACE STATION TO ITS LAUNCH POINT.

3) DOES NOT CONSIDER OTV PROPELLANT SAVINGS.

Table 3-11 Comparison of Concept F with Baseline Approach

As the Space Station moves into its new orbit the PIDM and tether are gradually retrieved for storage on the Space Station for later reuse. In actual practice, a momentum balance will be achieved between Shuttle deployments, OTV launches, and possible electrodynamic tether or other tether operations, so that average station altitudes will stay in the 250-300 nmi range, with the constraint of keeping the Space Station near the lower part of the altitude range during Shuttle revisits. (A 270 nmi nominal Space Station altitude has been used throughout the Phase 2 analysis to allow a common reference for comparison.)

If the tether approach is used, the OMV mission (requiring about 133 lb of cold gas usage for OTV placement and return) would be eliminated. The baseline OTV mission requires about 51,158 lb of cryogenic propellant (LOX/hydrogen) to go to geosynchronous orbit, place its payload, descend and change planes, accomplish its aerobraked reentry, and return to the Space Station vicinity. For the tethered approach the overall operation is similar to the baseline approach, but 4300 lb of OTV propellant can be saved by the momentum transfer from the 150 km tether launch. A small cold gas penalty (less than 500 lb) would be incurred by tether stabilization operations with the PIDM.

The maximum tether tension reached is 3970 lb (17,660 N), and corresponds to the design condition (2.2 factor of safety), which is slightly higher than Concept A-2. Energy to be disposed during the 8-hr or less period of the 150 km tether deployment is 366 kWh, which is the maximum achieved in any of the tether concepts. The retrieval energy requirement (tether plus PIDM) is 29 kWh. The tethered OTV launch causes a 0.51% reduction in Space Station angular momentum and corresponds to the 37.5 nmi average decrease in altitude (to be made up by a tethered Shuttle deployment later). The tethered approach operation time is estimated to be 16 hrs (compared to 5 hrs for the baseline approach).

The operations complexity of Concept F is expected to be 10% to 20% higher, with the hardware complexity similarly increased. Mission success risk shows a slight increase (to 5%), but technology risk should be about the same as the baseline approach.

In the launch cost factor comparison, the launch operation is defined as getting the OTV from the Space Station to its launch point, and the cost factors do not consider OTV propellant savings, which are covered later in the benefits analysis (3.4). A launch cost reduction of at least 10% to 20% is expected compared to the baseline approach due to the removal of the OMV servicing requirement. Hardware development cost will probably increase about 5%.

Highlights of this Space Station tether application include the elimination of the OMV service mission, the 4300 lb reduction in OTV propellant required, and the significant reduction in Space Station angular momentum which permits additional tethered Shuttle deployments (Concept A-2) with further savings in scavenged OMS propellants.

3.3.3 Placement of 20,000 lb AXAF into 320 nmi Orbit via Shuttle - Concept B1

Concept B1 was the initial Phase II study concept selected for comparison and requires the initial placement of the AXAF spacecraft (Advanced X-Ray Astrophysical Facility) into a 320 nmi circular orbit at 28.5 deg inclination. In the baseline approach (Table 3-12), the AXAF is taken directly to a 320 nmi orbit by the Shuttle (using direct insertion), which then returns to deorbit after deployment and checkout of the spacecraft. In the tethered approach, the Shuttle again uses the direct insertion technique, but is placed into a lower elliptical orbit (118 nmi x 290 nmi) with insertion at apogee. A 60 km (32.5 nmi) tether is required to match the 320 nmi circular orbit velocity conditions for an apogee release.

As the tether is fully deployed above the orbiter, the AXAF ascends into an elliptical path (148 nmi x 320 nmi) which gives it the appropriate velocity at apogee, while the Shuttle descends slightly to a 116 nmi x 288 nmi elliptical path. With this combination of initial Shuttle orbit and tether length, the appropriate conditions are met at tether release. As the AXAF goes through its apogee it is released and is immediately injected into its final circular orbit at 320 nmi while the Shuttle goes to the desired perigee (100 x 288 nmi orbit). As the Shuttle moves into its lower orbit the PIDM and tether are retrieved back to the Shuttle. At a subsequent near-apogee passage, after cargo bay doors are closed, the Shuttle will make its deorbit burn for reentry.

For the baseline case, most of the integral OMS propellant (23,700 lb) is required, because of the high orbit. For the tethered approach the total propellant required is reduced by 16,200 lb if a direct deorbit from apogee is used. In this case, the Shuttle orbit (both before and after tether deployment) is precessing in plane by about 11 to 12 deg per day due to earth oblateness. If the mission takes several days, an off-apogee deorbit burn will be required to match proper reentry conditions for the landing site location. The off-apogee burn could require an additional several thousand pounds of propellant but overall propellant savings are expected to be in the 11,000 to 16,000 lb range, in any case. A small cold gas penalty (less than 500 lb) would be incurred during the tether operations for deployment and retrieval.

The maximum tether tension is small for this mission (i.e., 477 lb or 2122 N) and tether energy generation during deployment is about 17 kWh (to be disposed of on the Shuttle). Energy for retrieval of the tether and PIDM is about 1 kWh (17 kWh would be required if the AXAF were to be retrieved in an abort situation). Shuttle tether system

MISSION: B1 - PLACE 20000 LB. AXAF INTO 320 NMI CIRCULAR ORBIT AT 28.5 DEG. ORBIT INCLINATION VIA ORBITER

CRITERIA	BASELINE APPROACH	TETHERED CONCEPT	COMPARISON	EVALUATION/COMMENTS
I. QUANTITATIVE MISSION CRITERIA				
A. ORBITS (NMI AT 28.5 DEG. INCL)				
o INITIAL ORBIT	320 x 320	118 x 290		LOWER STS INJECTION ENERGY FOR TETHER CASE.
PRE-RELEASE OR PRE-RENDEZVOUS ORBITS				
o DEPLOYER (SHUTTLE)	N/A	116 x 288		
o DEPLOYED MASS (AXAF)	N/A	148 x 320		
o (TETHER LENGTH - NMI)	N/A	(32.5)		
POST-RELEASE OR POST-RENDEZVOUS ORBITS				
o DEPLOYER	N/A	100 x 288		PERIGEE REDUCED FROM 116 TO 100 NMI.
o DEPLOYED MASS	N/A	320 x 320		
FINAL ORBITS				
o DEPLOYER	320 x 320	100 x 288		ASSUMES DEORBIT FROM APOGEE. LOWER STS DEORBIT ENERGY FOR TETHER CASE
o DEPLOYED MASS	320 x 320	320 x 320		
B. PROPELLANT USAGE (LB)				
o SHUTTLE ORBITER	23700	7500[1]	+16200	SUBSTANTIALLY REDUCED ORBITER PROPELLANT LOAD REQUIRED
o OMV				
o OTV				
o SPACE STATION				
o END EFFECTOR (PIDM OR SIDM)	N/A	<500	- 500	SMALL PENALTY
C. TETHER SYSTEM				
o MAXIMUM TENSION (LB)	N/A	477 (2122N)		
ENERGY USAGE (KWH)				
o DEPLOYMENT	N/A	17	+ 17	ORBITER DISPOSES 17 KWH IN 4-6 HRS.
o RETRIEVAL	N/A	1	- 1	ORBITER SUPPLIES 1 KWH IN 4-6 HRS.
o SYSTEM WEIGHT (LB)	N/A	8000	- 8000	ESTIMATED TETHER SYSTEM WEIGHT IN CARGO BAY
D. SPACE STATION MOMENTUM				
o MOMENTUM GAIN (KG-M^2/SEC)	N/A	N/A		
E. OPERATIONAL TIME (HRS.)	TBD	TBD		
II. QUALITATIVE MISSION CRITERIA				
A. COMPLEXITY (0-2)				
o OPERATIONS	1.0	1.2 - 1.5	+.2 TO .5	20% TO 50% MORE OPS. COMPLEXITY
o HARDWARE	1.0	1.1 - 1.4	+.1 TO .4	10% TO 40% MORE HDW. COMPLEXITY
B. RISKS (0-2)				
o MISSION SUCCESS	1.0	1.1	+.1	10% MORE MISSION SUCCESS RISK
o TECHNOLOGY	1.0	1.05	+.05	5% MORE TECHNOLOGY RISK
C. COST FACTOR (0-2)				
o LAUNCH	1.0	1.0	0	SAME COST SINCE DEDICATED LAUNCH
o HARDWARE DEVELOPMENT	1.0	1.05	+.05	5% MORE HDW. DEVELOPMENT COST

NOTES: 1) ORBITER OMS PROPELLANT REQUIREMENT COULD BE INCREASED BY SEVERAL THOUSAND POUNDS TO ALLOW DEORBITS AHEAD OR AFTER APOGEE OF FINAL ORBIT (TETHER CASE). APOGEE PRECESSES 11-12 DEG/DAY.

Table 3-12 Comparison of Concept B1 with Baseline Approach

weight is estimated to be 8000 lb and is based on the tethered satellite deployer system with some modifications for the larger payload. An operational time comparison has not been determined at this time, but it is expected that the tethered approach would take 16 hrs for deployment and retrieval with an unspecified additional time for checkout while the AXAF is on the tether. The baseline approach would probably take less time.

The operations complexity is expected to be substantially higher (20% to 50% more) for the tethered approach. The hardware complexity is also expected to be higher (10% to 40%) than the baseline approach. The mission success risk and the technology risk are expected to be somewhat higher (10% and 5%, respectively) for the tethered approach. Launch cost should be about the same for the tethered concept while hardware development cost may be slightly higher (about 5%).

Overall, 11,000 to 16,000 lb of Shuttle OMS propellant could be saved with the tethered approach, but much of this would be offset by the tether system weight of 8000 lb. The additional complexity of the tether operations (over the baseline approach) would probably not be desirable for this initial placement mission, particularly if it remains a dedicated launch. The tethered approach should be considered as a backup to the baseline approach in the event that more payload capability is required (about 3000 to 8000 lb potentially available), or in the event a higher altitude orbit becomes desirable.

3.3.4 Retrieval of 20,000 lb AXAF from 205 nmi Circular Orbit for Maintenance and Reboost to 320 nmi - Concept B2

Since the AXAF spacecraft will gradually decay (due to drag) from its initial altitude (in approximately 3 yrs) to an altitude of about 205 nmi, the plan is to accomplish periodic maintenance on board the Shuttle and then reboost the AXAF back to its original orbit. In the baseline approach the OMV is brought up from the ground in the Shuttle (160 nmi parking orbit) and does the actual retrieval and reboosting of AXAF from 205 nmi down to 160 nmi and back up to 320 nmi and returns to the Shuttle. A shared payload would also be released at 160 nmi when scheduling, cargo weight and volume limits permit. The OMV is fully loaded with propellant to allow a return of the AXAF from 320 nmi (after reboosting) in the event of checkout failure. In this abort situation the AXAF would be returned to the ground for repair and later relaunch.

A tethered approach for this AXAF servicing mission is compared with the baseline approach in Table 3-13. In this case, the Shuttle would make a direct insertion to 205 nmi (vs. 160 nmi) altitude to rendezvous with the AXAF spacecraft. The OMV would not be required, but the Shuttle tether deployer system would be carried in the cargo bay. After rendezvous, the AXAF spacecraft would be brought aboard for maintenance and repair. While at the 205 nmi altitude, a shared payload could also be released, if available.

MISSION: B2 - RETRIEVE 20000 LB AXAF FROM 205 NMI CIRCULAR ORBIT FOR PERIODIC MAINTENANCE AND REBOOST TO 20 NMI CIRCULAR ORBIT				
CRITERIA	BASELINE APPROACH	TETHERED CONCEPT	COMPARISON	EVALUATION/COMMENTS
I. QUANTITATIVE MISSION CRITERIA				
A. ORBITS (NMI AT 28.5 DEG. INCL)				
o INITIAL ORBIT	160 x 160	205 x 205 205 x 303		DIRECT INSERTION ORBIT OF ORBITER APOGEE RAISED AFTER AXAF RETRIEVED[1]
PRE-RELEASE OR PRE-RENDEZVOUS ORBITS				
o DEPLOYER (SHUTTLE)	N/A	204 x 302		
o DEPLOYED MASS (AXAF)	N/A	222 x 320		
o (TETHER LENGTH - NMI)	N/A	(18.2)		(NOTE REDUCTION OF TETHER LENGTH FROM AXAF PLACEMENT MISSION-B1)
POST-RELEASE OR POST-RENDEZVOUS ORBITS				
o DEPLOYER	N/A	194 x 302		PERIGEE REDUCED FROM 204 TO 194 NMI
o DEPLOYED MASS	N/A	320 x 320		
FINAL ORBITS				
o DEPLOYER	160 x 160	194 x 302		ASSUMES DEORBIT FROM APOGEE FOR
o DEPLOYED MASS	320 x 320	320 x 320		TETHERED CASE
B. PROPELLANT USAGE (LB)				
o SHUTTLE ORBITER	13100	19400[2]	-6300	INCREASED ORBITER PROPELLANT REQUIRED FOR TETHER CASE
o OMV	6700	0	+6700	OMV & PROP. NOT REQ'D. FOR TETHER CASE
o OTV				
o SPACE STATION				
o END EFFECTOR (PIDM OR SIDM)	N/A	<500	- 500	SMALL PENALTY
C. TETHER SYSTEM				
o MAXIMUM TENSION (LB)	N/A	259 (1152N)		
ENERGY USAGE (KWH)				
o DEPLOYMENT	N/A	6	+ 6	ORBITER DISPOSES 6 KWH IN 6 HRS.
o RETRIEVAL	N/A	1	- 1	ORBITER SUPPLIES 1 KWH IN 4-6 HRS. (MUST SUPPLY 6 KWH FOR ABORT RETRIEVAL)
o SYSTEM WEIGHT (LB)	24700	22100	+2600	ASE REQUIRED TO SUPPORT AXAF REBOOST IS LESS FOR TETHERED CASE.
D. SPACE STATION MOMENTUM				
o MOMENTUM GAIN (KG-M^2/SEC)	0	N/A		
E. OPERATIONAL TIME (HRS.)[3]	64.0 EST	16.0 EST	+48.0 EST	TETHERED APPROACH REDUCES OPERATIONAL TIME BY ABOUT 48 HOURS.
II. QUALITATIVE MISSION CRITERIA				
A. COMPLEXITY (0-2)				
o OPERATIONS	1.0	1.0 - 1.2	0 TO .2	0% TO 20% MORE OPS. COMPLEXITY
o HARDWARE	1.0	1.1 - 1.2	+.1 TO .2	10% TO 20% MORE HDW. COMPLEXITY
B. RISKS (0-2)				
o MISSION SUCCESS	1.0	1.0 - 1.05	0 TO .05	0 TO 5% MORE MISSION SUCCESS RISK
o TECHNOLOGY	1.0	1.0	0	SAME TECHNOLOGY RISK
C. COST FACTOR (0-2)				
o LAUNCH	1.0	1.0 - 0.9	0 TO -.10	0 TO 10% REDUCTION IN LAUNCH COST
o HARDWARE DEVELOPMENT	1.0	1.05	.05	5% INCREASE IN DEVELOPMENT COST

NOTES: 1) COMPLICATES OPERATION.

2) ORBITER OMS PROPELLANT REQUIREMENTS COULD BE INCREASED BY SEVERAL THOUSAND POUNDS TO ALLOW DEORBITS AHEAD OR AFTER APOGEE OF FINAL ORBIT (TETHER CASE). APOGEE PRECESSES AT +11-12 DEG/DAY.

3) TIMES DO NOT INCLUDE AN 86 HR. PERIOD (ESTIMATED) AT THE ORBITER FOR AXAF MAINTENANCE AND REPAIR. THIS TIME PERIOD IS ASSUMED TO BE THE SAME FOR BOTH VERSIONS.

Table 3-13 Comparison of Concept B2 with Baseline Approach

After completion of AXAF maintenance and checkout, the Shuttle would perform an OMS burn to raise its apogee to 303 nmi to commence tether deployment (205 x 303 nmi orbit). A 34 km (18.2 nmi) tether is required to match the 320 nmi velocity conditions in this case (substantially shorter than for Concept B1). As the tether is deployed upward to its full length the AXAF rises into an elliptical path (222 x 320 nmi) while the Shuttle descends slightly to a 204 x 302 nmi elliptical path. After the AXAF is determined to be ready for release, it will be released on the next apogee passage and inject directly into its 320 nmi circular orbit, while the Shuttle moves into a 194 x 302 nmi elliptical orbit. As the Shuttle moves into its lower orbit the PIDM and tether is retrieved for storage on the Shuttle. At a later near-apogee passage, after cargo bay doors are closed, the Shuttle will make its deorbit burn for reentry (in an abort situation, the AXAF would be retrieved by tether before release and returned to the ground aboard the Shuttle).

For the baseline case about 13,100 lb of Shuttle OMS propellant is required (160 nmi orbit). The tethered approach requires a minimum of 19,400 lb (6300 lb more), but this could be increased by several thousands of pounds due to the off-apogee condition discussed in the Concept B1 comparison (3.3.3). A small cold gas penalty (less than 500 lb) would also be incurred during the tether deployment and retrieval operations.

The maximum tether tension is only 259 lb (1152 N) for this mission and tether energy during deployment is about 6 kWh. Energy for retrieval of the PIDM and tether is about 1 kWh (6 kWh would be required for retrieval of AXAF in an abort situation). Estimated system weight in the cargo bay is 24,700 lb for the baseline approach (including the OMV and AXAF maintenance gear) and approximately 22,100 lb (a reduction of 2600 lb) for the tethered system (including tether deployer system and AXAF maintenance gear). Operational times using the OMV and tethered deployment are estimated at 64 hrs and 16 hrs, respectively. These times do not include the 86 hr period (estimated) while the AXAF is in the cargo bay undergoing maintenance and repair.

The operations complexity would be somewhat higher in the tethered approach (0 to 20%). The hardware complexity is also expected to be higher (10% to 20%) compared to the baseline approach. The mission success risk could be somewhat higher (0 to 5%) for the tethered approach, but the technology risk should be equivalent to the baseline approach. Tether deployment should cost somewhat less (0 to 10%) compared with the baseline approach, using the OMV, but hardware development costs may be up to 5% higher.

Overall, the 2600 lb weight reduction in ASE weight for the tethered case is more than offset by the 6000-9000 lb OMS propellant penalty, but the tethered approach eliminates the use of a dedicated, fully loaded ground launch OMV mission. If the baseline approach can utilize its 4000 lb to 7000 lb payload advantage (volumewise) it might more than offset the launch cost advantage of the tethered approach. A more detailed examination would be required to recommend the best approach.

3.3.5 Tethered OMV Rendezvous and Retrieval of OTV Returning from a Geosynchronous Mission - Concept D

Although the rendezvous and docking techniques for a tethered OMV to retrieve a returning OTV (Concept D) have not been established, sufficient information is now available (from recent OTV work at Martin Marietta) to make a comparison of benefits between the tethered approach and the baseline approach and is presented in Table 3-14. Before discussing the comparison, it is worth while to review the overall OTV geosynchronous mission, using the baseline approach.

After the OTV and payload have been moved to the launch point (near an equatorial crossing) the OTV main engines are fired to raise the orbit apogee to geosynchronous altitude. At geo the apogee burn simultaneously circularizes the orbit and changes planes (from 28.5 deg to 0 deg inclination). The OTV will then spend up to approximately 24 hrs (time interval to the second Space Station orbit plane crossing) to distribute up to a maximum of 4 payloads in geosynchronous orbit. After this period, the OTV will execute a deorbit burn (with plane change) to match the orbit plane of the Space Station and target for an aerobraked passage through the atmosphere (one or more mid-course corrections will be required for accurate targeting). Some additional propulsion may be required to control atmospheric exit conditions. The OTV will then be in an orbit that reaches the Space Station altitude (at apogee) with the Space Station ahead of the OTV. At apogee, the OTV will use a small propulsion maneuver to raise its perigee above the atmosphere (e.g., 100 nmi). The OTV will then remain in this orbit for several circuits until final phasing occurs. At a later apogee passage a final OTV burn is made and the OTV is then located in the Space Station orbit (outside of proximity Zone 2) at a point about 30 nmi behind the station. Very little phasing is required in the low orbit since a planned fast or slow return (up to 1 hour or more variation in return trip time from geosynchronous orbit) will eliminate any need for long phasing times in low orbit. An OMV mission will then be required to retrieve and return the OTV to the Space Station.

In the tethered OMV retrieval approach the first portion of the OTV mission would be the same, but the returning OTV would be targeted to a 220 nmi apogee subsequent to the aerobraking pass through the atmosphere. At this point the orbit would be circularized and the OTV would phase with the tethered OMV located below the Space

MISSION: D - TETHERED OMV RENDEZVOUS/RETRIEVAL OF OTV RETURNING FROM GEOSYNCHRONOUS MISSION TO SPACE STATION				
CRITERIA	BASELINE APPROACH	TETHERED CONCEPT	COMPARISON	EVALUATION/COMMENTS
I. QUANTITATIVE MISSION CRITERIA				
A. ORBITS (NMI AT 28.5 DEG. INCL)				
o INITIAL ORBIT	270 x 270	270 x 270		
PRE-RELEASE OR PRE-RENDEZVOUS ORBITS				
o DEPLOYER (SPACE STATION)	N/A	270 x 270		UPCOMING OTV IN 220 x 263 NMI ORBIT
o DEPLOYED MASS (OMV/OTV)	N/A	263 x 263		FOR RENDEZVOUS AT APOGEE.
o (TETHER LENGTH - NMI)	N/A	(7)		
POST-RELEASE OR POST-RENDEZVOUS ORBITS				
o DEPLOYER	N/A	269 x 270		
o DEPLOYED MASS	N/A	262 x 263		
FINAL ORBITS				SPACE STATION ORBIT NOT SIGNIFICANTLY
o DEPLOYER	270 x 270	269 x 270		AFFECTED BY OTV RETRIEVAL OPERATION
o DEPLOYED MASS	270 x 270	269 x 270		WITH TETHER.
B. PROPELLANT USAGE (LB)				PROPELLANT USAGE IS COMPARED FOR THE PERIOD AFTER OTV AERO BRAKING.
o SHUTTLE ORBITER				
o OMV[1]	<500	<500	0 EST.	NO PROPELLANT SAVINGS.
o OTV	<500	<500	0 EST.	NEGLIGIBLE PROPELLANT SAVINGS.
o SPACE STATION				
o END EFFECTOR (PIDM OR SIDM)	N/A			
C. TETHER SYSTEM				
o MAXIMUM TENSION (LB)	N/A	58 (258N)		
ENERGY USAGE (KWH)				
o DEPLOYMENT	N/A	<1 KWH	+1 KWH	NEGLIGIBLE ENERGY DISPOSITIONED
o RETRIEVAL	N/A	<1 KWH	-1 KWH	NEGLIGIBLE POWER SUPPLIED
o SYSTEM WEIGHT (LB)	N/A	25000	-25000	ESTIMATED SS REUSABLE TETHER SYSTEM DEPLOYER WEIGHT
D. SPACE STATION MOMENTUM				1.309060×10^{16} KG-M^2/SEC (REFERENCE)
o MOMENTUM GAIN (KG-M^2/SEC)	0	0	0	NEGLIGIBLE CHANGE IN SS ANGULAR MOMENTUM
E. OPERATIONAL TIME (HRS.)	5.0 EST.	16.0 EST.	- 11	TETHER APPROACH REQ. ADD'L 11 HRS.
II. QUALITATIVE MISSION CRITERIA				
A. COMPLEXITY (0-2)				
o OPERATIONS	1.0	1.5 - 2.0	+.50 - 1.0	50%-100% MORE OPS. COMPLEXITY
o HARDWARE	1.0	1.5 - 2.0	+.50 - 1.0	50%-100% MORE HDW. COMPLEXITY
B. RISKS (0-2)				
o MISSION SUCCESS	1.0	1.25-1.5	+.25-.50	25%-50% MORE MISSION SUCCESS RISK
o TECHNOLOGY	1.0	1.5 - 2.0	+.50-1.0	50%-100% MORE TECHNOLOGY RISK
C. COST FACTOR (0-2)				
o LAUNCH	1.0	1.25	+ .25	25% MORE LAUNCH COST
o HARDWARE DEVELOPMENT	1.0	2.0	+1.0	100% MORE HDW. DEVELOPMENT COST

NOTES: 1) DUE TO THE PRECISE NAVIGATION AND GUIDANCE ACCURACY REQUIREMENT FOR THE OTV TO ENTER THE ATMOSPHERE, THE OTV IS ABLE TO INJECT INTO THE SAME ORBIT WITH THE SPACE STATION IN THE NEAR VICINITY (ABOUT 30 NMI) BEHIND IT. THIS GREATLY SIMPLIFIES THE BASELINE OTV RETRIEVAL MISSION AND MINIMIZES PROPELLANT USAGE ON THE OMV.

Table 3-14 Comparison of Concept D with Baseline Approach

Station. At the proper time a burn would be made to transfer to apogee and rendezvous with the tethered OMV (TOMV). Several mid-course corrections would be made with the OTV, but final rendezvous and docking would be controlled by the TOMV and tether deployer, as presently envisioned.

The detailed comparison of the TOMV retrieval approach (Concept D) with the previously described baseline approach for returning the OTV to the Space Station is presented in Table 3-14. The TOMV is attached to the tether at the lower position on the Space Station (at 270 nmi altitude) and deployed with its forward (probe end) facing downward. The tether length required is about 13 km (7 nmi) for this mission. Since the mass of the partially fueled OMV is quite low compared to the Space Station mass, the TOMV is lowered to an altitude of 263 nmi and the Space Station essentially remains at 270 nmi altitude. After retrieval of the OTV (rendezvous near apogee of the 220 nmi x 263 nmi OTV final orbit), the added mass causes the Space Station to move to a 269 x 270 nmi orbit and the TOMV/OTV is now in a 262 x 263 nmi elliptical path. After retrieval, the Space Station remains in an orbit of approximately 269 x 270 nmi.

The propellant usage period of interest (for comparison) is the period after the OTV aerobraking maneuver. Because of the navigation and guidance requirement for the OTV to make a precise targeting of the atmospheric entry corridor (within 5 or 10 nmi of altitude) from geosynchronous altitude, the OTV has the capability to do precise orbit injection and phasing to return to close proximity to the Space Station. Both the OTV and the OMV will require very little propellant for those conditions (less than 500 lb each). With the tethered approach, similar propellant requirements (less than 500 lb each) exist. It is believed at this time that OMV and OTV propellant savings will be negligible with the tethered approach.

Maximum tether tension (during retrieval of the TOMV with OTV) is only 58 lb (258 N) and energy usage is less than 1 kWh during deployment or retrieval. The estimated Space Station reusable tether system weight is 25,000 lb (as described in Concept A-2) and Space Station angular momentum change is negligible. Estimated operational time for the baseline approach is 5 hrs (OMV retrieval time) and 16 hrs for the tethered rendezvous operation (deployment and retrieval).

The tethered rendezvous approach operations complexity and the hardware complexity are both believed to be much greater than the baseline approach (both are 50% to 100% more complex). Mission success risk is projected to be 25% to 50% greater than the baseline, and the technology risk may be 50% to 100 % greater than the baseline approach. Launch cost for the tethered approach is expected to be about 25% greater and hardware development cost could be 100% greater.

Highlights of the Concept D comparison to the baseline approach suggest that no significant savings in OMV or OTV propellant is achieved, the operational time is significantly higher (16 hrs compared to 5), and operations and hardware complexity is substantially greater. Because of the perceived complexity of the tethered capture/rendezvous, both the mission success risk and the technology risk will be significantly higher with the tethered approach and higher launch and hardware development costs will be incurred.

3.4 Benefits Analysis

A useful way of looking at the Space Station angular momentum gains and losses is to observe the average change in Space Station altitude as a function of the activities that affect altitude. Activities considered in this analysis were Space Station drag decay, tethered OMV launch effects, tethered OTV launch effects, and tethered Shuttle deorbit effects. Since crew rotation is projected to be at quarterly intervals and drag makeup will occur at least quarterly, momentum balance was treated on a quarter year basis.

The basic approach was to take the data from the OMV and OTV mission models (Table 3-1 and 3-2) and record the tether length requirements and propellant savings (for later use) for the OMV launches (from Figure 3-6) and the OTV launches (from Figure 3-8 for a 150 km tether length) and calculate the average decrease in Space Station altitude (per quarter) using the tether relationships given in Table 3-3. Average Space Station altitude loss per quarter was taken from Table 3-9. This procedure allowed the basic activities that cause Space Station altitude losses to be collected and summarized. Those are presented graphically in Figure 3-9. (Note that OMV and OTV launches cause some variation in Space Station orbit eccentricity, but this analysis treats average altitude changes only.)

Notice that the effects of tethered OMV launches is very small (due to the small number of OMV launches) and maximum quarterly Space Station altitude loss is less than 4 nmi in 1998. Space station average altitude loss due to aerodynamic drag reflects the varying yearly atmospheric density of the sunspot cycle, with a maximum average quarterly loss of 12 nmi in 1991. Significant altitude loss effects begin to occur in 1995, when the first tethered OTV launches would be initiated. Tethered OTV launch effects vary from a minimum average quarterly Space Station altitude loss of about 29 nmi (1995) to a maximum of 100 nmi (1998). Total average quarterly altitude losses from the three activities start at 12 nmi in 1991, reach a minimum of 6 nmi in 1994, a maximum of 106 nmi in 1998, and remain over 90 nmi in the year 2000. There is no intention to allow the Space Station altitude to vary by those larger amounts, but to balance altitude losses with gains from tethered Shuttle deorbit operations.

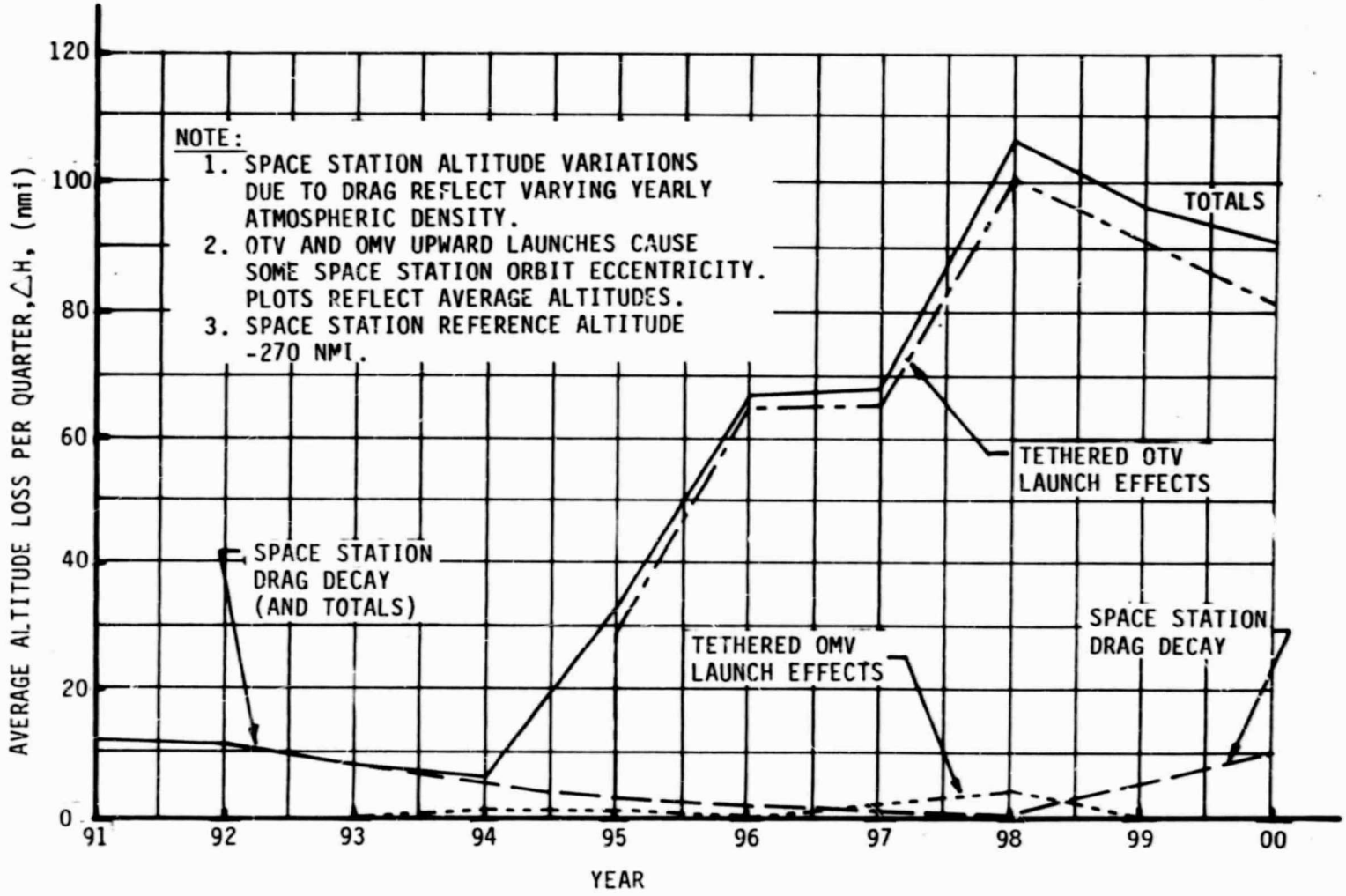

Figure 3-9 Potential Space Station Quarterly Altitude Losses

Figure 3-10 shows the Shuttle quarterly tether deployment requirements (i.e., number of flights and tether lengths) necessary to maintain Space Station average altitude by balancing the quarterly altitude losses induced by the activities presented in Figure 3-9. The data reflects the average number of Shuttle tether deployments per quarter for each year of the mission period and is based on average orbit altitude changes (i.e., as with OMV and OTV launches, orbit eccentricity effects are not treated). All calculations are based on having the Space Station at a nominal altitude of 270 nmi, as before.

For the first five years (1991-1995) the minimum of 1 tethered Shuttle deorbit per quarter (4 per year) will be adequate to take care of drag decay, the few OMV launches, and the first OTV flights in 1995. Shuttle deorbit tether lengths will vary from a minimum of 10 km (1994) to a maximum of 53 km in 1995. The decreasing tether length requirement from 1991-1994 reflects the variation in Space Station drag aerodynamic/effects previously discussed. For this estimate it has been assumed that no electrodynamic power tether is being used.

In general, there are always more Shuttle flights going to the Space Station than the momentum balance can fully utilize, particularly in the 1991-1995 time period. As the number of OTV launches build up, the number of Shuttle missions to the Space Station also increases to bring OTV propellant and payloads to the Space Station. The minimum number of tethered Shuttle deorbits required varies from 4 annually (1 per quarter) up to 11 annually (about 1 per month) in the late 90s. Up to 14 Shuttle Space Station missions per year (1999) are planned for this time period by the "Nominal Mission Model (FY 1983-2000), Revision 7 (SS), Space Station Advocacy," July 1984, MSFC.

The potential yearly benefits from Space Station operations are summarized for the 1991-2000 time period in Figure 3-11. The direct benefits are derived from propellant savings (various types) from using tethered launch and deployment techniques and also from the elimination of OMV operations associated with OTV launches. The types of propellant savings shown are Shuttle OMS propellant (nitrogen tetroxide/monomethyl hydrazine), OMV propellant (same as Shuttle OMS), cold gas (nitrogen) savings from the elimination of OMV usage for OTV operations, OTV propellant (LOX/hydrogen), and Space Station orbit stationkeeping propellant (hydrazine assumed).

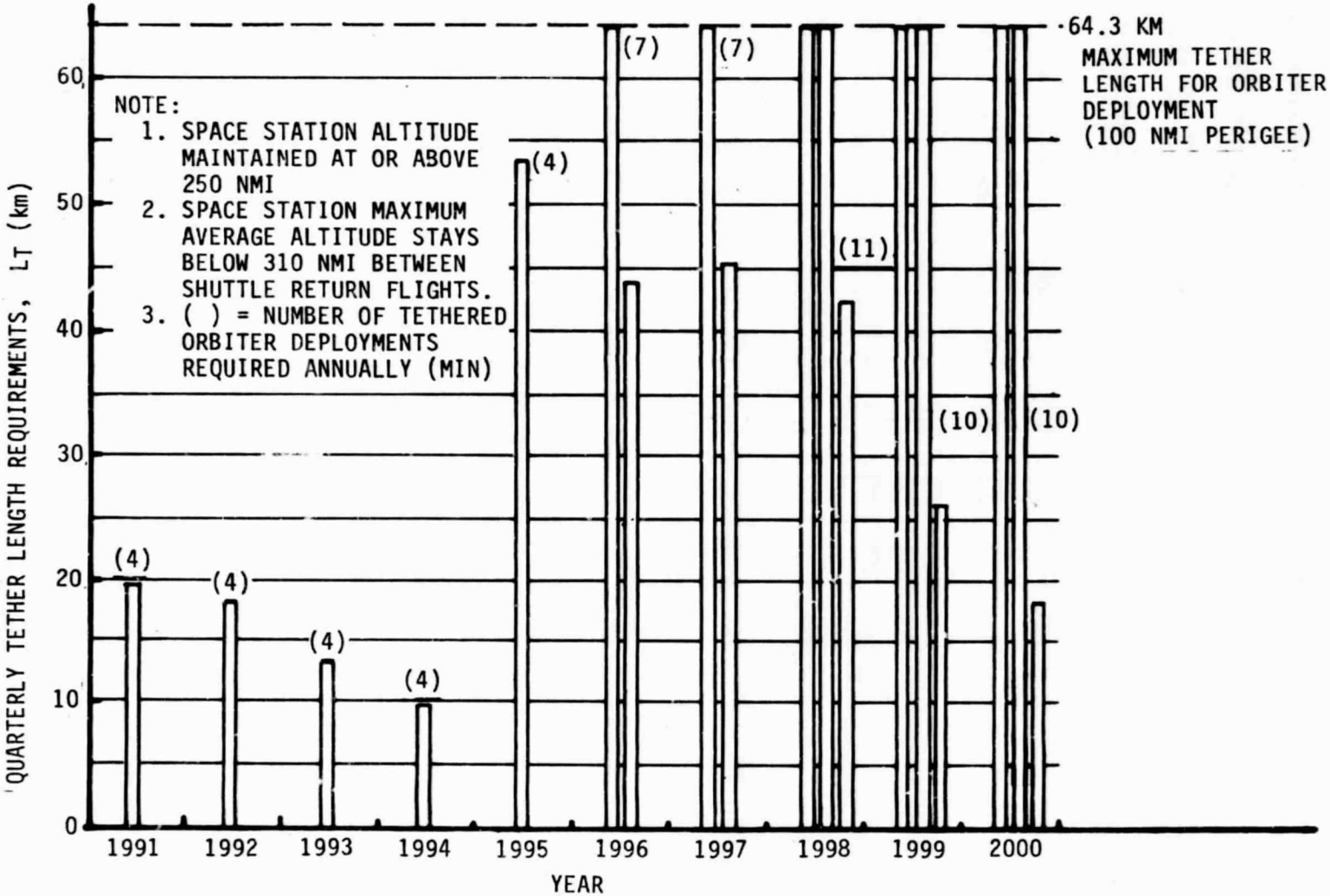

Figure 3-10 Shuttle Quarterly Tether Deployment Requirements to Maintain Space Station Altitude

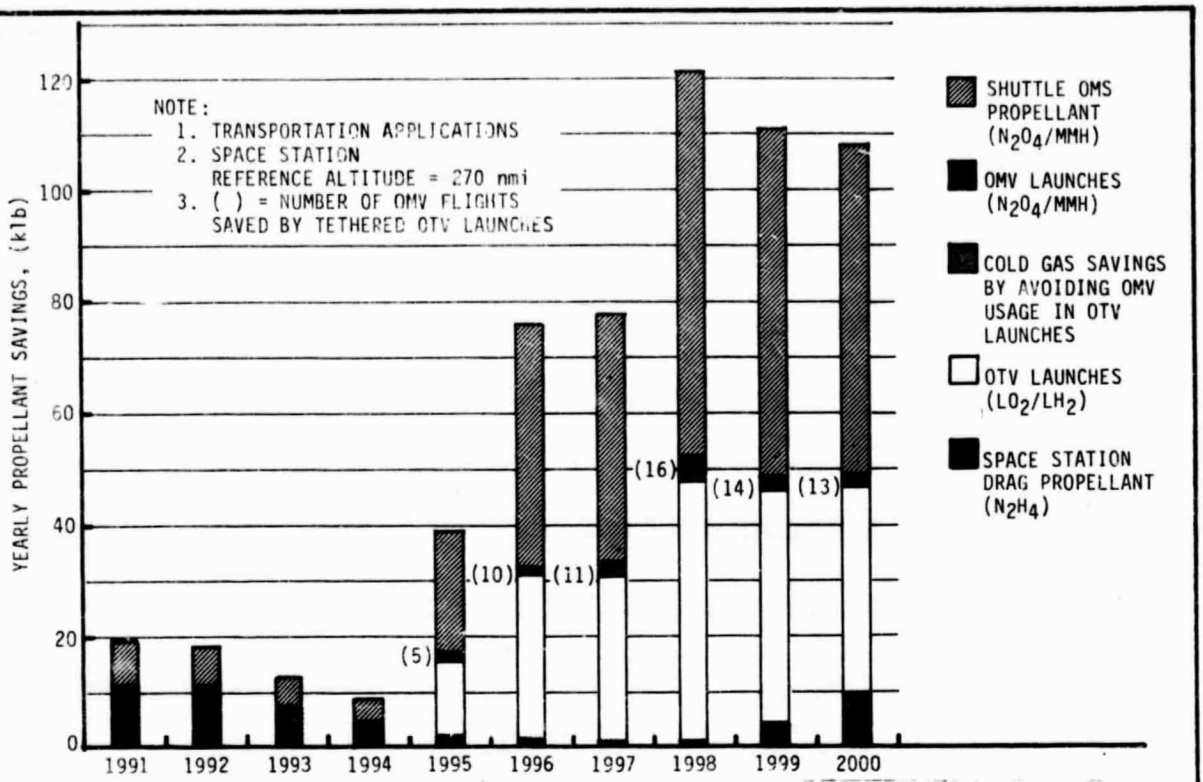

Figure 3-11 Potential Yearly Benefits from Space Station Tether Operations

PROPEL-LANT	N_2H_2	LO_2/ LH_2	N_2O_4/MMH		*COLD GAS	*OMV FLTS.	MIN.# TETH. STS DEORB.	TOTAL PROPELLANT SAVED
USING SYS. APPL.	S.S. STA.KP.	OTV	STS OMS	OMV	OMV	SAVED		
YEAR	(LBS)	(LBS)	(LBS)	(LBS)	(LBS)			(LBS)
1991	11,560	0	7,840	0	0	0	4	19,400
1992	11,000	0	7,190	300	0	0	4	18,490
1993	7,520	0	5,250	180	0	0	4	12,950
1994	4,320	0	3,920	630	0	0	4	8,870
1995	2,420	13,450	21,490	940	665	5	4	38,965
1996	1,580	29,450	43,630	0	1330	10	7	75,990
1997	1,120	29,850	44,280	1240	1460	11	7	77,950
1998	1,320	46,400	69,040	2660	2130	16	11	121,550
1999	4,580	41,700	62,540	240	1860	14	10	110,920
2000	9,820	37,200	59,270	300	1730	13	10	108,320

*Benefits derived from tether launch of OTV.

Table 3-15 Potential Benefits from Space Station Tether Applications

The two primary areas for propellant savings result from the tether assisted OTV (1995-2000), both in terms of OTV propellant saved and the even larger savings of OMS propellant scavenged from Shuttle deorbit operations. Space Station orbit maintenance is the major user of angular momentum in the early years and allows the associated scavenging of OMS propellant and the saving of orbit maintenance propellant. Propellant savings associated with OMV tethered launches are not significant. Overall, propellant savings average about 59,000 lb per year over the 10 year period, with a maximum of 122,000 lb in 1998. Details of the various potential propellant savings, OMV flights saved (69 total from 1995-2000), and minimum number of tethered Shuttle deorbits are presented in Table 3-15.

In summary, because of the potential propellant savings from tether operations, the Space Station propellant resupply requirements are significantly reduced, making the Space Station a more efficient (cost-effective) system in terms of accomplishing its mission as a space base for launching OMVs and OTVs. The scavenged OMS propellant can be used to support OMV operations and the OTV propellant savings appear as reduced requirements. Since the tethered Shuttle deorbit operations eliminate the need for orbit maintenance propellant, this savings is also a reduced requirement. Further, the potential elimination of the 69 OMV missions required for OTV launch operation represents still another cost savings.

Other potential tether benefits include the potential for increasing the performance envelope of the OMV (increased payload-altitude range) and also a potential increase in payload weight to geosynchronous orbit for the OTV. If tethered launches and Shuttle deorbit operations are planned for the Space Station from the start and orbit maintenance is handled without propellant, a simpler (lower cost) Space Station propulsion system may be possible.

4.0 TETHER DEPLOYMENT SYSTEMS

4.1 Deployment System Categories

The selected concepts which involve tether deployment and which were used as the basis for defining the categories for tether deployment systems are:

Concept A2 - Tethered Deorbit of Shuttle from Space Station,

Concept F - Tether Assisted Launch of an Orbital Transfer Vehicle to Geosynchronous Orbit

Concepts B and B2 - Orbit Insertion of AXAF by Tether from Shuttle.

Concept F is a companion concept to A2 which enables the beneficial utilization of the angular momentum imparted to the Space Station by the tethered deorbit of the Shuttle. Without some method of reusing this angular momentum, the number of times the tethered deorbit of Shuttle could occur would be limited to infrequent intervals corresponding to the angular momentum requirements for Space Station orbit maintenance activity. This orbit maintenance activity would consume only a small fraction of the angular momentum potentially available to be transferred to the Space Station from the Shuttle deorbit operations.

One other tether deployment concept from Space Station which was considered was a tether assisted launch of the Orbital Maneuvering Vehicle (OMV). The conclusion reached was that the fraction of OMV missions which could use tether assist was on the order of one in twenty (See 3.1.1). In addition, the actual benefit in terms of overall propellant savings due to this application was insignificant relative to that which could be saved with the tether launch assist to the OTV missions. For these reasons the tether assisted launch of the OMV was not considered as a basis for the design of a deployment system. In the event it becomes desirable to perform such an OMV launch assist, the OTV tether deployer system as described in this section should be adequate.

The necessary teaming of Concept A2 for the tether deorbit of Shuttle and Concept F for the tether launch of an OTV mission to geosynchronous orbit, leads to the consideration of a dual mode deployer system for Space Station which could alternately perform the downward deployment of the Shuttle and then the upward deployment of the OTV mission. There is an obvious necessity to alternate these upward and downward deployments to keep the angular momentum (average orbit altitude of the Space Station) within acceptable limits.

This angular momentum balance analysis based on projected mission models is treated in Section 3 of this report. The analysis indicates that the controlling element in the balance is the

number of OTV missions planned. There is significantly more angular momentum available to be scavenged from the Shuttle deorbit operations than can be used by the tether launch assist of the OTV missions. A conclusion is that the concept of angular momentum balance between the upward and downward deployments could accommodate a significant increase (approximately 50%) in the OTV mission model traffic before reaching a limit on the amount of angular momentum available to be scavenged from the downward deployments of the Shuttle. As pointed out earlier, even if the Shuttle deorbit limit were reached, other masses such as waste packages or external tanks are available for tether deorbit.

An alternative approach to beneficial use of this transferred angular momentum would be the use of an electrodynamic tether as an auxiliary power system for the Space Station. However, concurrent use of Concepts E2 and F are not deemed feasible due to conflicting location and operational requirements for the two systems. The use of Concept E2 until the advent of the OTV operations in 1995 would permit the transfer of angular momentum and the scavenging of OMS propellant from the Shuttle to begin much earlier than would be the case if OTV launch assist were the only method of using the scavenged angular momentum. For this study, it has been assumed that the operational and economic benefits of the tether assisted launch of the OTV missions outweigh those from the use of Concept E2 to provide an auxiliary power system. Such a planned transition would require a decommissioning of the auxiliary power system and institution of the OTV launch assist capability when the space based OTV operations begin in 1995.

For the purpose of this study, it was decided to develop a tether deployment system concept that would satisfy the combined requirements of Concept A2 and Concept F. The requirements for such a system are given in 4.2 and the resulting design concept is described in 4.3.

The deployment of payloads from the Shuttle into operational orbits that are above those easily reached by the Shuttle is exemplified by Concept B (AXAF deployment).

The requirements for this Shuttle deployment system are given in 4.4 and the resulting design concept is described in 4.5.

4.2 System Performance Requirements for a Tether Deployment System for Space Station

4.2.1 Reference Masses

The Space Station reference configuration to be used as the basis for the Phase B studies was used for the definition of requirements and concept development for this study.

Mass values used for the primary elements were:

Space Station	550,000 lbm	(250,000 kg)
Shuttle Deorbit	220,000 lbm	(100,000 kg)
Fueled OTV with Payload	73,200 lbm	(33,300 kg)

4.2.2 Reference Altitude(s)

The altitude and altitude range to be considered for the Space Station orbit is 270 +40 -20 nmi.

The perigee altitude of the Shuttle subsequent to release from the tether is to be constrained to be above 100 nautical miles to insure against automatic re-entry on the first perigee pass after release from the tether.

4.2.3 Tether Lengths/Tensions

The design constraint to be used for upward tether length deployment of the OTV is to develop a roughly equivalent level of tension in the tether to that developed by the downward Shuttle deorbit operation.

These considerations lead to a maximum tether length for the orbiter deployment of 65 km and 150 km for the OTV. The corresponding tension levels (rounded upward) are 3900 lbf for the Orbiter at 65 km and 4000 lbf for the OTV at 150 km. These values include the tension due to the tether mass at 40 kg/km and using a design factor of 2 +.

4.2.4 Shuttle Interface Deployment Module (SIDM)

The SIDM must provide the load transfer interface between the tether deployment system and the Shuttle. It must be capable of two fault tolerant release capability under full tension load with the primary release under control of the Shuttle crew and backup release controlled by the Space Station crew. The SIDM shall not intrude into the cargo bay payload clearance envelope so as not to constrain the return cargo capabilities of the Shuttle.

The SIDM shall incorporate a propellant transfer interface to the Shuttle such that OMS bipropellant can be transferred from the Shuttle to the SIDM during the tether deployment operation. This propellant transfer interface is to incorporate a remotely controlled disconnect capability to be implemented prior to the release of the SIDM from the Shuttle. The SIDM shall provide storage capacity for OMS bipropellant in excess of 6500 pounds.

The SIDM shall incorporate a standard grapple fixture accessible by the Shuttle RMS, the Space Station RMS or by the OMV capture mechanism. The purpose of this grapple fixture is for handling operations during installation and retrieval of the SIDM and for possible recovery of the SIDM by the OMV in the event of contingency situations where the SIDM has been jettisoned.

The SIDM shall incorporate a cold gas propulsion and attitude control system to provide positive control of the attitude and location of the SIDM during the final close-in phase of the tether retrieval operations. The initial separation from the Space Station shall be performed by the Shuttle RCS out to a distance such that adequate gravity gradient tension forces have built up to complete the tether deployment operation. This initial separation is in the range from 0.5 to 1.0 km.

The SIDM shall incorporate a remotely controlled disconnect or guillotine capability to disconnect the SIDM from the tether. This capability is to be used in the event of a severed tether such that the SIDM could be secured prior to being jettisoned by the Shuttle with the intent of a subsequent retrieval operation by an OMV mission from Space Station.

The SIDM shall incorporate a retro reflective cube surface or equivalent system to permit location tracking of the SIDM by Space Station systems during the tether retrieval process.

The SIDM shall incorporate a berthing interface capability with the tension alignment carriage on the lower tether deployment assembly.

The SIDM shall incorporate a command/control data link to the Space Station to permit statusing and control functions to be performed for the onboard systems. This would include the tether disconnect, propellant transfer disconnect, the secondary release mechanisms and the cold gas attitude control system.

4.2.5 Payload Interface Deployment Module (PIDM)

The PIDM must provide the load interface between the tether deployment system and the OTV/payload assembly. It must be capable of releasing from the OTV under full tension load. The release operation will be performed by remote control from the Space Station. The location of such a tether system load interface with the OTV has not been determined. It has been assumed for study purposes that it is in an axial location on the main engine end of the OTV. This location will minimize sensitivity of the interface to variations in the mass distribution of the OTV/payload mission stack. It may be desirable to incorporate a controlled tip off rate release capability to allow the use of forces generated during tether release to effect the 90° reorientation of the OTV stack prior to initiating the orbit transfer burn. For study purposes assume a symmetrical release with zero tip off rate.

The PIDM shall incorporate a cold gas attitude control system to accomplish the initial separation (out to 1 to 2 km) of the OTV from the Space Station until tether tension forces build up to adequate levels to complete the deployment operation and to provide control of the location and attitude of the PIDM during the final close-in phase of the tether retrieval operation.

The PIDM shall incorporate a standard grapple fixture accessible by the Space Station RMS for any handling operations required on the Space Station. The grapple fixture will also be compatible for use by the OMV in the event of a contingency mode where retrieval of the PIDM by the OMV is required.

The PIDM shall incorporate a remotely controlled disconnect or tether guillotine capability to disconnect the tether from the PIDM.

The PIDM shall incorporate a retro reflective cube surface or equivalent system to permit location tracking of the PIDM by Space Station systems during the deployment and retrieval operations.

The PIDM shall provide a berthing interface capability with the tension alignment carriage on the upper tether deployment assembly.

The PIDM shall incorporate a command/control communications link to the Space Station to permit the exercise of statusing and control functions. These will include the tether disconnect, the release function, and the cold gas attitude control system.

4.2.6 Deployment and Retrieval Energies

The energy generated during a 150 km deployment of a maximum OTV stack is 366 kWh. This includes the energy generated by the deployment of the PIDM and tether. The retrieval of the PIDM and tether requires a retrieval energy to be supplied of 29 kWh.

The energy generated during a 65 km deployment of the Shuttle is 153 kWh and the energy required to be supplied for retrieval of the SIDM (loaded with 6500 pounds of OMS propellant) and the tether is 11 kWh.

4.2.7 Tension Alignment Assemblies

The tether deployment system(s) shall provide the capability to align the tether tension force with the Space Station center-of-mass to control disturbance torques on the station. The tension alignment system is to provide an angular range of $\pm$ 0.1 radian about the local vertical in the plane of the orbit. Cross plane angles are considered to be negligible and no provision for cross track alignment is required.

The tension alignment assemblies are the most outboard portion of the station in contact with the tether. They are to include a provision to sever the tether at this outboard location for use in event of a broken or severed tether.

4.2.8 Tether Reel Assembly(s)

The reel assembly shall provide the capability to deploy and retrieve the tether under the required tension levels. This includes the capability to modulate the deployment and retrieval rates in accordance with specified tension control laws. The energy generated during the deployment operation is to be converted to electrical energy by means of the tether motor/generator drive system operating in a generator mode. The system shall be capable of either supplying this power as input to the Space Station power bus or of directing it to a high temperature resistive load bank such that it can be radiated to space as waste heat.

The reel assembly shall include a friction brake capable of locking the reel against full tether tension once full deployment has been attained.

During retrieval operations the tether drive system will function in a motor mode and will be supplied with electrical power from the Space Station power system to perform the retrieval.

4.3 Design Concept for a Dual Mode Tether Deployment System for Space Station

The concept must provide the capability to alternately deploy payloads downward (Shuttle) and upward (OTV). This means that deployment locations will be required at both the nadir and zenith locations on the Space Station centerline. Due to the vertical dimension of the station (400 ft) the following options were considered:

1. Two complete systems - one nadir and one zenith.

2. One system that could be translated between the locations by means of the traveling manipulator on the station.

3. One centrally located reel system which could be alternately directed either up or down. (This is the selected concept).

4. Two reels colocated but with a single drive motor serving both reels.

The weight penalties involved with the use of two separate reel systems as suggested in items 1 and 4 and the difficulties associated with transporting the system from one end of Space Station to the other as noted in item 2 were the reasons for deciding on a single centrally located reel system per item 3.

The Space Station configuration used for this study is the NASA, reference configuration selected for the phase "B" Space Station study effort. The future operational configuration (FOC) projected by NASA would not materially affect the implementation of a tether deployment system as described in this report so long as the gravity gradient tower concept for the Space Station is retained.

Figure 4-1 shows the baseline Space Station with the addition of the tether deployment system equipment. In this configuration, Shuttle is shown berthed at the earth pointing or nadir end of the station prior to release for downward deployment. The OTV with payload is shown positioned on the top or zenith end of the Space Station prior to release for deployment upward. Centrally located on the Space Station structure is the dual mode main reel system. Reaching from this point to each end of the structure are separate leader tethers feeding the two deployment systems (upper and lower). A tether quick release connecting device to be discussed later is located in proximity to the reel. As one system is in use, the leader tether for the other will be disconnected.

Each end of the Space Station structure is equipped with a tension alignment boom. This boom translates fore and aft on the upper (or lower) end of the Space Station structure, and in plane with the orbit (These alignment booms are shown later in more detail in Figures 4-4a and 4-4b for the lower system and in Figure 4-10 for the upper). Riding on the boom is a translating tension alignment carriage which includes a berthing ring for the Payload Interface Deployment Module (PIDM). As the payload is deployed, the translating carriage will change position as required to maintain alignment of the tether tension with the Space Station center of mass. This allows the Space Station in-plane attitude to remain vertical as the tether to the OTV or Shuttle payload deviates from vertical during the deployment process. The booms are designed to accommodate up to $\pm$ 7° (slightly in excess of the 0.1r requirement) of in-plane tether angle. Out of plane angular deviations for these missions are minimal, therefore, no out of plane alignment provisions are included.

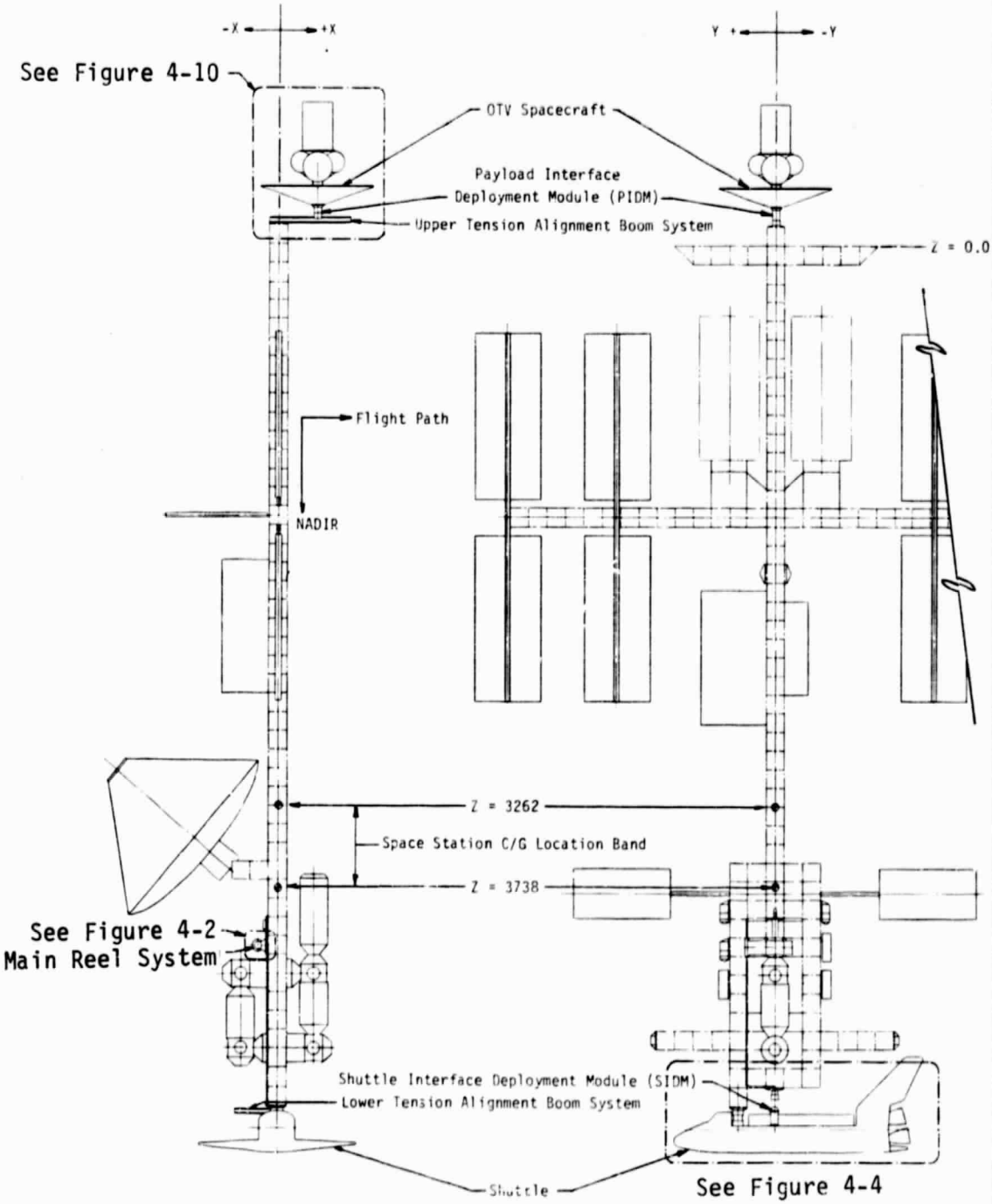

Figure 4-1 Space Station with Dual Mode Tether Deployment System

For purposes of simplified assembly in space, the tether system has been designed in four modularized subsystems:

1. Reel drive assembly;
2. Reel with tether
3. Upper tether alignment assembly;
4. Lower tether alignment assembly.

These subsystems are brought up as preassembled units to be attached to the structure by standardized fastening devices. It is anticipated that such devices will be standardized throughout Space Station for attachment of components. The reel module with tether will be removed and changed out as a unit for tether replacement.

The installation of the interconnecting tether between the reel assembly and the boom assemblies will be performed by EVA.

Attached to the lower end of the Space Station structure is a standard Shuttle berthing interface. This location has been selected to position the Shuttle in an ideal location for the installation of the SIDM. The SIDM could also be installed onto the Shuttle at other berthing locations on the Space Station. This SIDM attachment interface location is forward of the Shuttle center of mass. This is to cause the Shuttle to hang on the tether in a nose up attitude so as to avoid any danger of the tether fouling the Shuttle tail structure during tether deployment and release operations. Installation of the SIDM to the Shuttle will require EVA to mate the latches and to mate the OMS propellant transfer lines.

The corresponding attachment of the OTV spacecraft to the upper PIDM will be somewhat different than for the installation of the SIDM onto the Shuttle. The OTV mission stack to be deployed will be transported from designated assembly and servicing areas to the upper deployment area by the Space Station traveling manipulator. The manipulator will place the mission stack onto the PIDM and the retention latches closed by remote control. After the OTV mission stack has been attached to the PIDM which in turn is held by the alignment boom system, the manipulator can be detached and moved out of position.

The PIDM will differ from the SIDM with respect to its spacecraft interface configuration. Also, there is no PIDM requirement for an OMS propellant scavenging system. The functional requirements for on-board systems such as the propulsion system required for retrieval and communications will be similar.

Figures 4-2a and 4-2b show the reel system assembly. The assembly is located on the trailing side of the Space Station structure. This system includes the reel, reel motor/generator, radiator, tether leader exchange mechanisms, tether control unit and guide pulleys.

Reel - The reel is sized to hold up to 81 nautical miles (150 km) of Kevlar tether. The tether will be teflon jacketed to prevent long term degradation from exposure to atomic oxygen. There is adequate space for a larger capacity reel if needed.

Reel Motor/Generator - The reel motor sizing is dependant on power generated during the deployment phase and the requirement to develop adequate braking torque to halt the deployment at any stage. Depending on the amount of time available for OTV deployment, it is anticipated that the power rating of the motor/generator drive will be in the range of 75 to 150 horsepower.

Radiator - The radiator is a high temperature electrical resistor bank which receives electrical power from the reel drive motor/generator during deployment and converts it to thermal energy that is then radiated to space as waste heat. This radiator can be located away from the proximity of the reel system and can be placed on the Space Station in a location selected to optimize its view factor to space and to avoid illuminating sensitive areas with thermal radiation.

Tether Splice Fitting - Figure 4-3 shows a method of connecting the main reel tether to either the downward or upward tether leader deployment assemblies. Each of the leader tethers and the main reel tether are spliced to their respective connector fittings. The mating fittings connect together by a hook and pin method. To mate the two fittings, they are oriented at 90° to each other which allows the hook to fit over the pins. The spring plunger is then retracted allowing the hook to fall in place over the pin. When the two fittings are returned to an in line position they can not be separated as the hook end will bear on the opposite fitting bearing face. The assembly is designed to pass over the 12 inch diameter guide pulleys. This will occur during the first 200 feet of tether deployment when both velocities and tensions are low. Guides will be incorporated at each pulley to insure that the fitting will pass over the pulley in a flat position.

Tether Control Unit - This unit will contain tether control equipment for measuring tether velocity, tension, deployed length and a device to provide tension control at the reel during intervals of low tension operation. Tension control will be required to insure smooth rendering of the tether onto the reel.

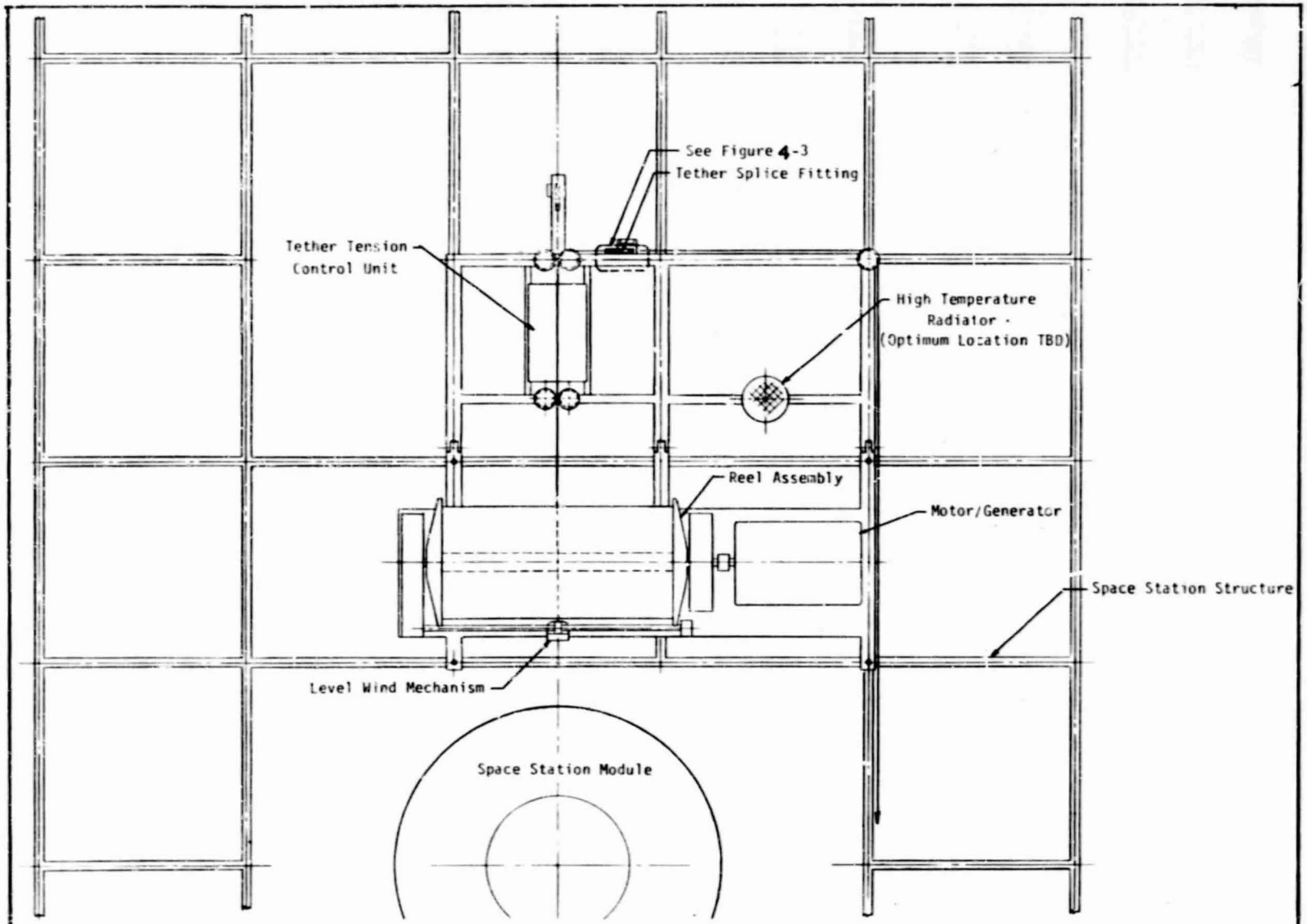

Figure 4-2a Tether Reel System Installation

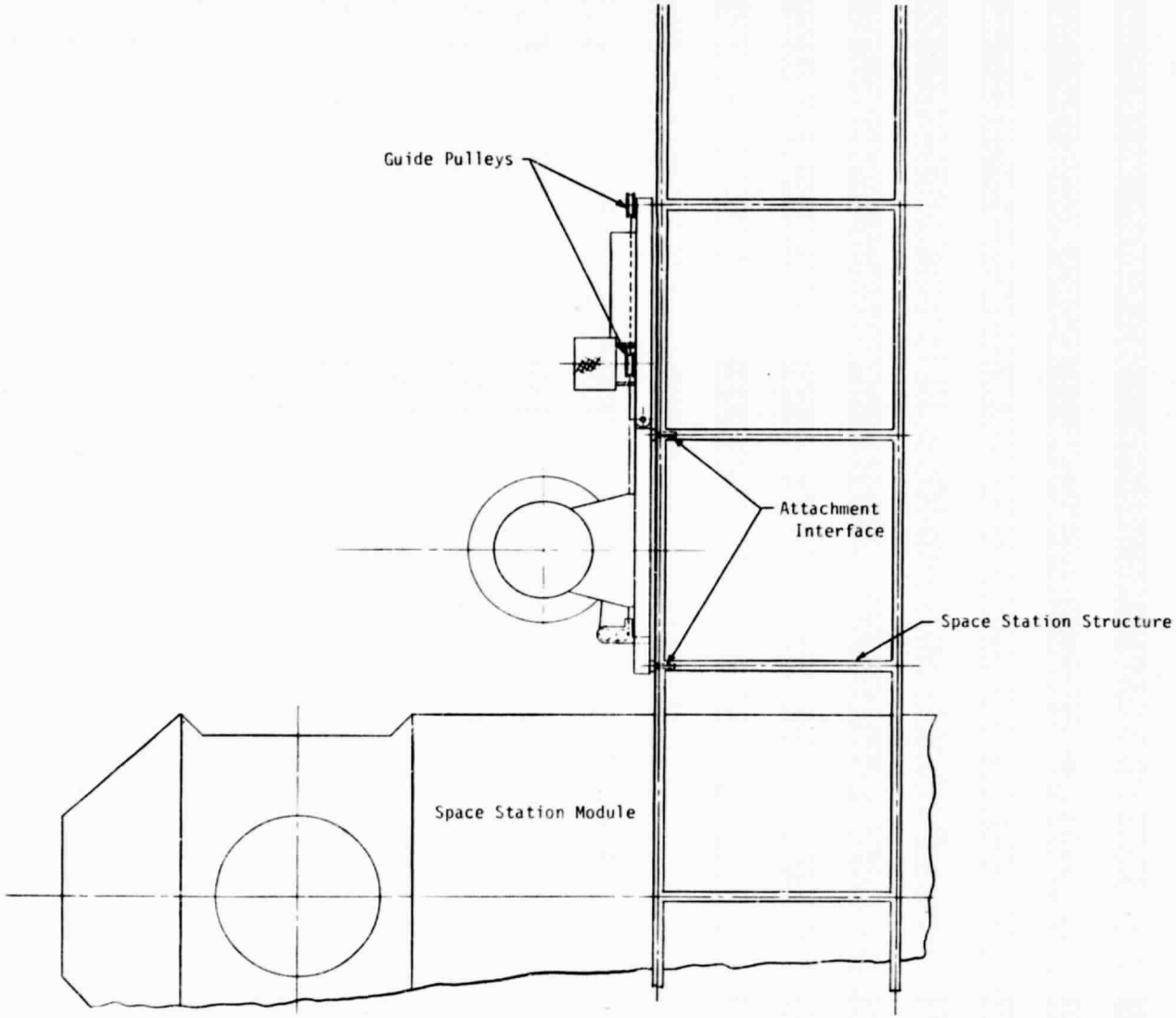

Figure 4-2b Tether Reel System Installation

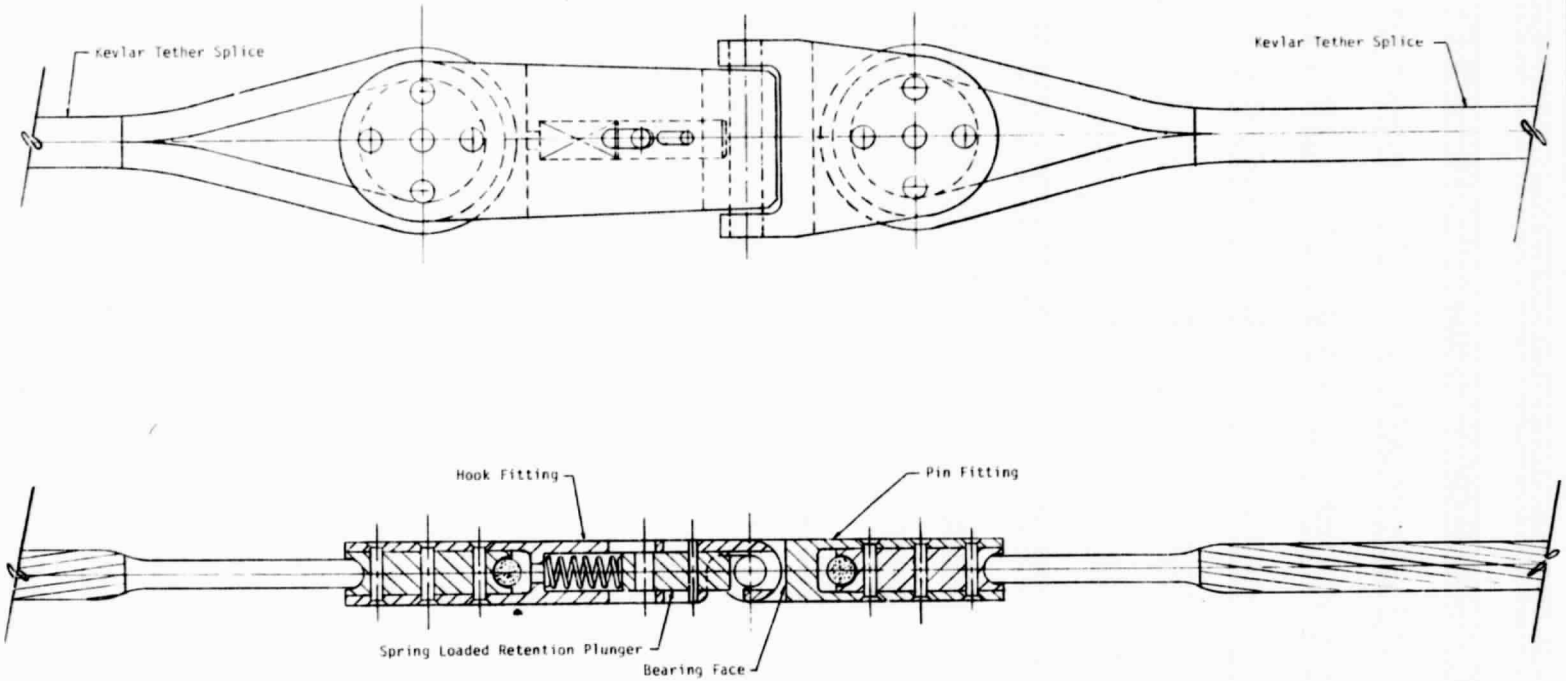

Figure 4-3 Tether Splice Fitting

Guide Pulleys - Guide pulleys will be located to direct the tether properly and will be a minimum of 12 inches in diameter and wide enough to accommodate the tether to leader interconnect fittings. All pulleys will be enclosed to prevent jamming. Enclosures for pulleys, tether and reel assembly are omitted from drawings in this report.

Figures 4-4a and 4-4b show a close up view of the Shuttle berthed to the lower end of Space Station. This berthing location is ideally located for installation of the SIDM on Shuttle from the lower tether deployment assembly. The Shuttle interface station location shown will always be located forward of the Shuttle center of mass resulting in a Shuttle nose up hang angle attitude at all times. The nose up attitude angle can be controlled by shifting the SIDM location forward or aft. The SIDM attaches to the Shuttle sill rails by means of the SIDM latches located on the aft end of the SIDM. The forward end of the SIDM bears on the sill bearing pads with no physical attachment. With the Shuttle hanging on the tether in a nose up attitude position the SIDM latches will always be in tension and the bearing blocks in compression. When the latch pins are pulled by the pyrotechnic pin pullers, the SIDM will be pulled away by the tether tension. Installation of the SIDM onto the Shuttle as shown here will require EVA.

The tension alignment boom translates on rollers attached to the Space Station support structure. The tension alignment carriage in turn translates on the boom tracks. Motor driven rack and pinion drives will provide the force to translate the carriage and boom and to maintain them in position. These boom and carriage drives will be controlled by the Space Station attitude determination system to control the in-plane attitude of Space Station. See Figure 4-5.

Figures 4-6a and 4-6b show an expanded view of the SIDM. The spherical unit on top is shaped to fit the cylindrical berthing interface on the carriage. The shape aids the final retrieval docking of the SIDM after Shuttle release. Latches on the alignment carriage berthing ring will secure the SIDM to the carriage for berthing and stowage. The SIDM strong back structural section serves to transfer tether tension loads to the release latch mechanisms at the Shuttle sills resulting in vertical loads only at the sill fittings.

Figures 4-6a and 4-6b also show the propellant storage tanks for the OMS propellant scavenging system. No attempt has been made to show the propellant transfer interface or disconnect fittings. The propellant tanks shown are the same size tanks as those planned for the Orbital Maneuvering Vehicle. The total capacity of the four tanks is 6700 pounds which is an ideal sizing for this application.

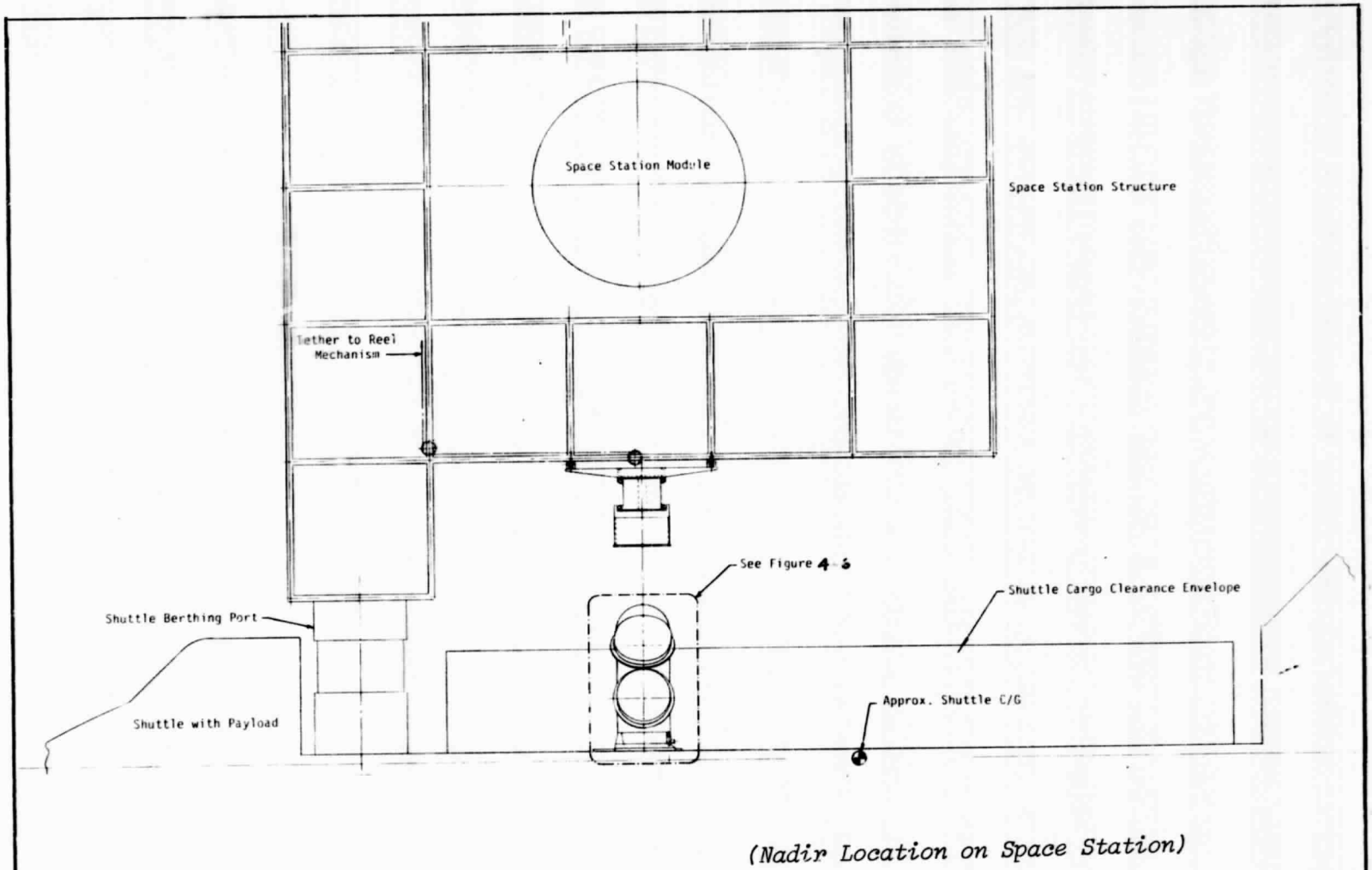

(Nadir Location on Space Station)

Figure 4-4a Shuttle Tether Deployment System

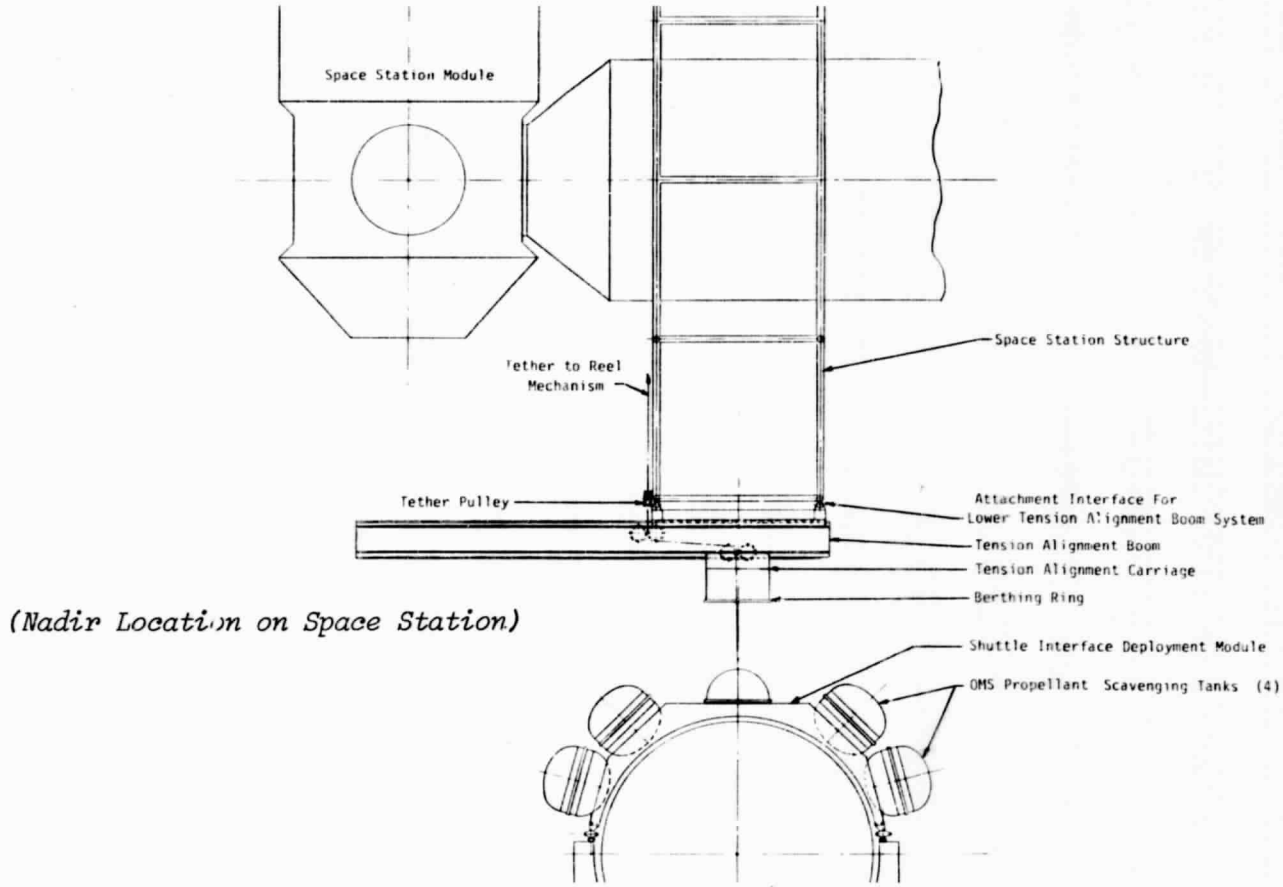

Figure 4-4b Shuttle Tether Deployment System

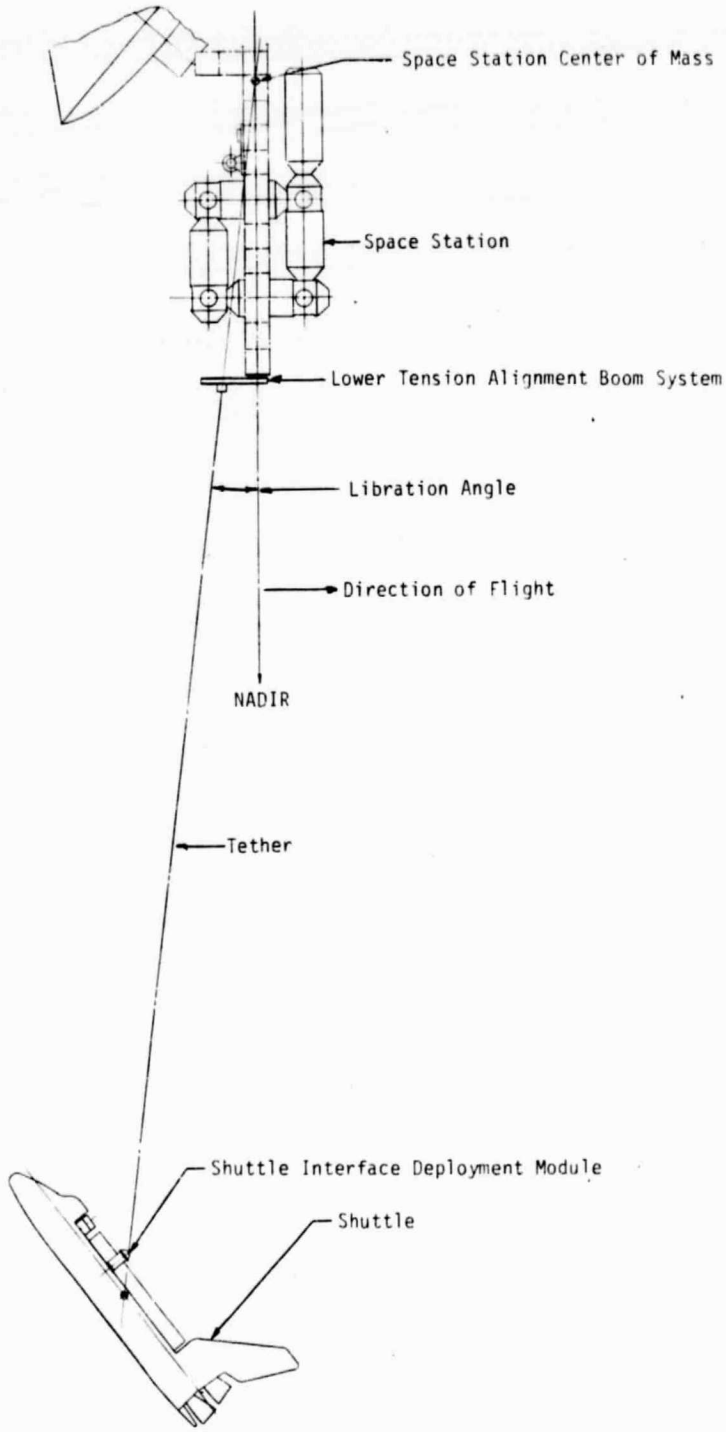

Figure 4-5 Space Station/Shuttle Attitude During Deployment

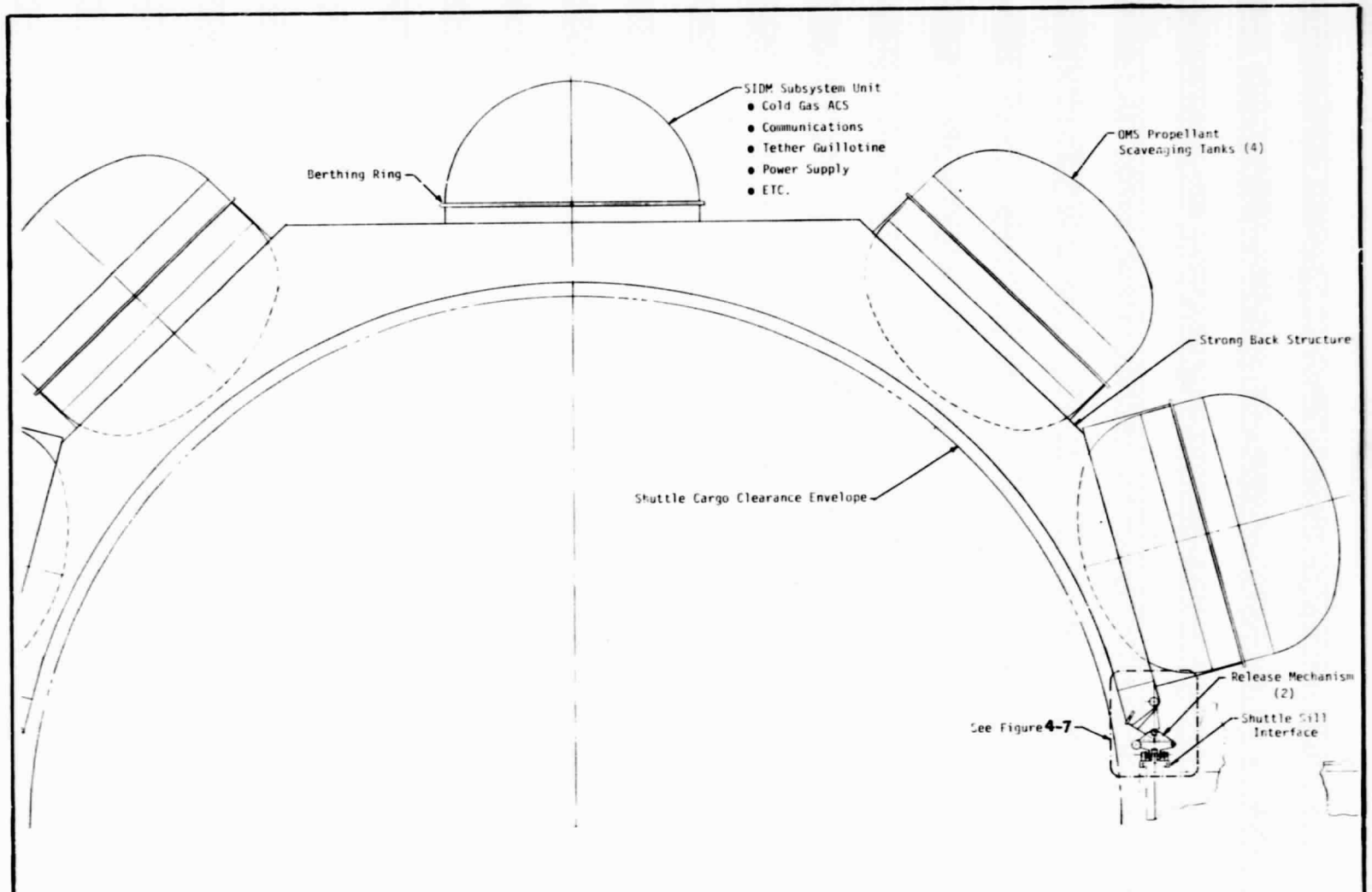

Figure 4-6a Shuttle Interface Deployment Module (SIDM)

PRECEDING PAGE BLANK NOT FILMED

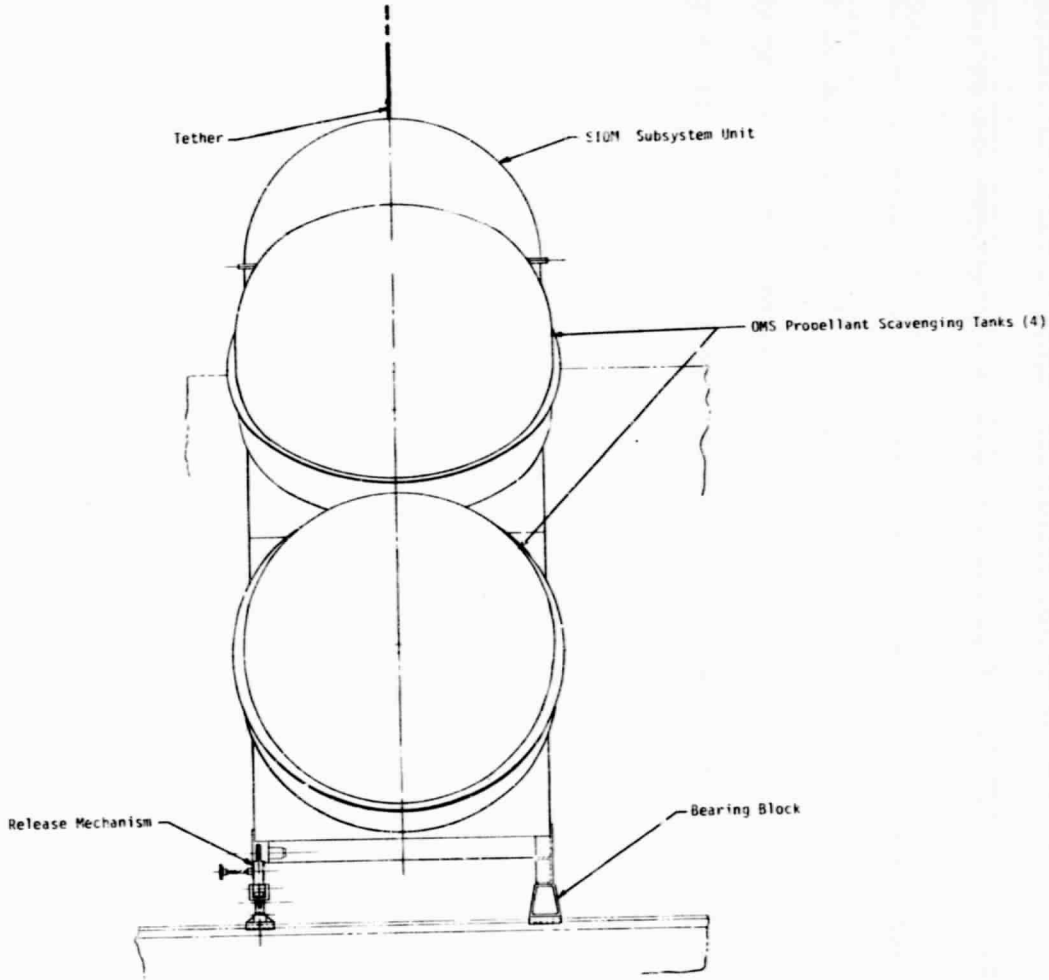

Figure 4-6b Shuttle Interface Deployment Module (SIDM) Side View

As the tether is deployed, OMS propellant (N_2O_4 on the right side and MMH on the left side of the Shuttle) will be transferred to the appropriate receiving tanks on the SIDM strong back. At any time during the deployment operation, only as much propellant will be transferred to the SIDM scavenging tanks as has become surplus to Shuttle deorbit requirements. In the event of tether system malfunction or other abort situation, the SIDM could be released from the Orbiter and adequate propellant would always be available on-board the Shuttle to complete deorbit and reentry. Under normal conditions, 6500 lbs of propellant will be transferred and retrieved to the Space Station for use by other systems (such as the OMV).

The modification required to the Shuttle cargo bay will consist of a nitrogen tetroxide line from the OMS kit oxidizer transfer panel at the aft cargo bulkhead up to the SIDM installation station on the right side of the cargo bay and a similar line for the monomethyl hydrazine fuel on the left side of the cargo bay. This plumbing will be permanently installed in those Shuttles to be used in tether deorbit operations. The SIDM interface will have quick disconnect flex lines which would connect with to the tanks mounted on the SIDM strong back beam. These same connecting lines will subsequently be used to transfer the scavenged propellant into propellant storage tanks at the Space Station.

The release latch mechanism design for the SIDM is shown in Figure 4-7. When the Shuttle has reached the release point, it is essential that release of the SIDM takes place for the sake of crew safety. The cargo bay doors cannot be closed with the SIDM in place. The release mechanism is designed to be three fault tolerant. The remote control release can be effected by either the Shuttle crew or the Space Station crew. Each of them has control of a pair of pivoting release latch fittings equipped with pyrotechnic pin pullers. The SIDM side swing latch consists of an open face hook. If the Shuttle latch pin is pulled, the Shuttle side link can rotate allowing the latch to fall free of the SIDM latch hook. Likewise, if the SIDM side pin is pulled, the SIDM latch hook rotates, falling free from the Shuttle latch. See Figure 4-8.

It is intended that the two Shuttle swing latch pins will be the primary release mode to be used and under control of the Shuttle crew. This permits these Shuttle release latches to be refurbished on the ground rather than the SIDM latches which would require refurb at the Space Station. Release will be performed by firing the pins on both sides of the Shuttle simultaneously. In the event only one pin should fire, full release will still occur because the open face hook on the opposite side will simply fall out after release of the first hook. If both should fail, the SIDM pins can be activated by the Space Station crew. The same sequence of events applies to the SIDM side as for the Shuttle side. The result is that four pyrotechnic pin pullers are involved but only any one of the four need operate to effect release.

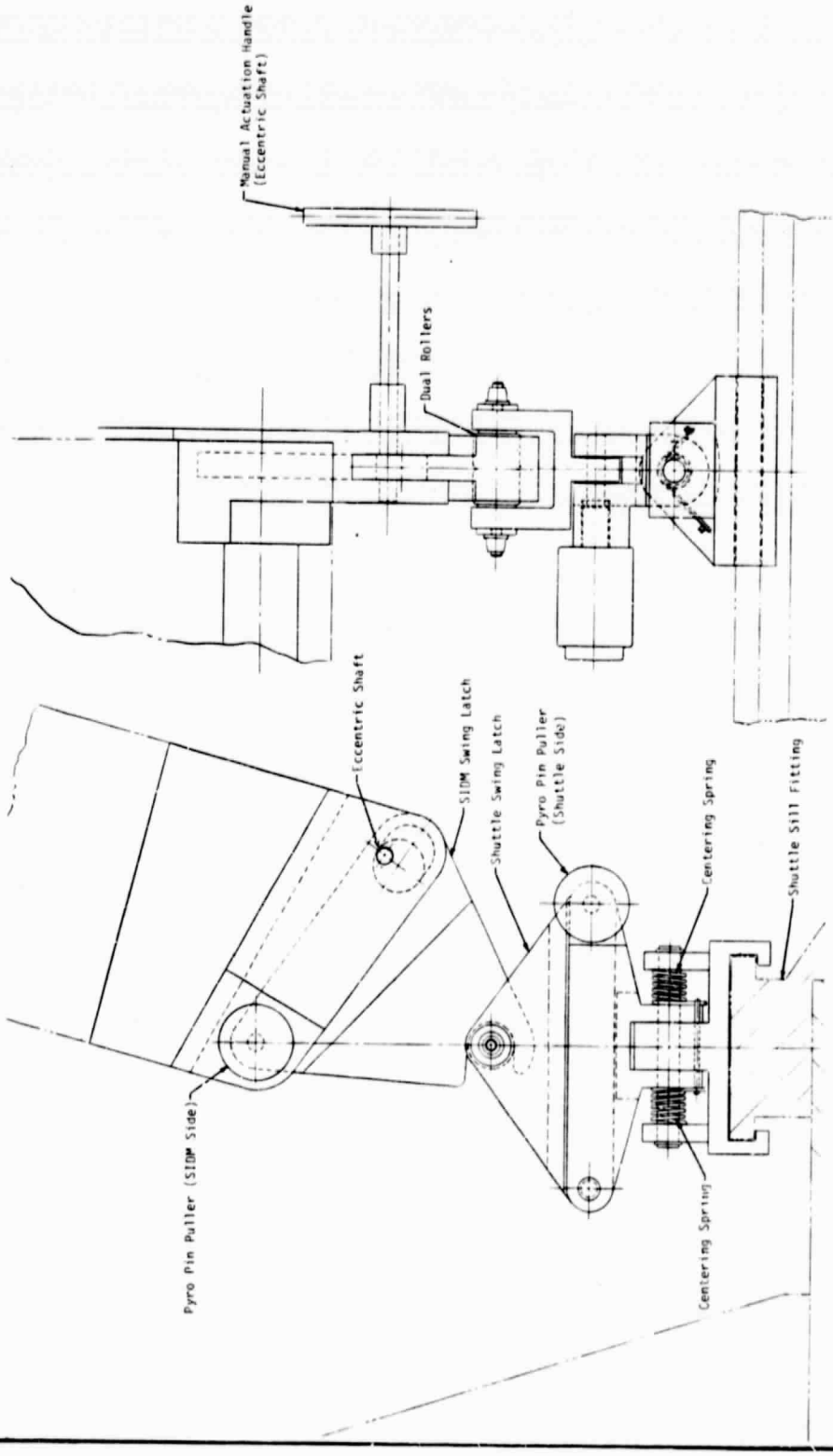

Figure 4-7 SIDM/Shuttle Release Mechanism

PRECEDING PAGE BLANK NOT FILMED

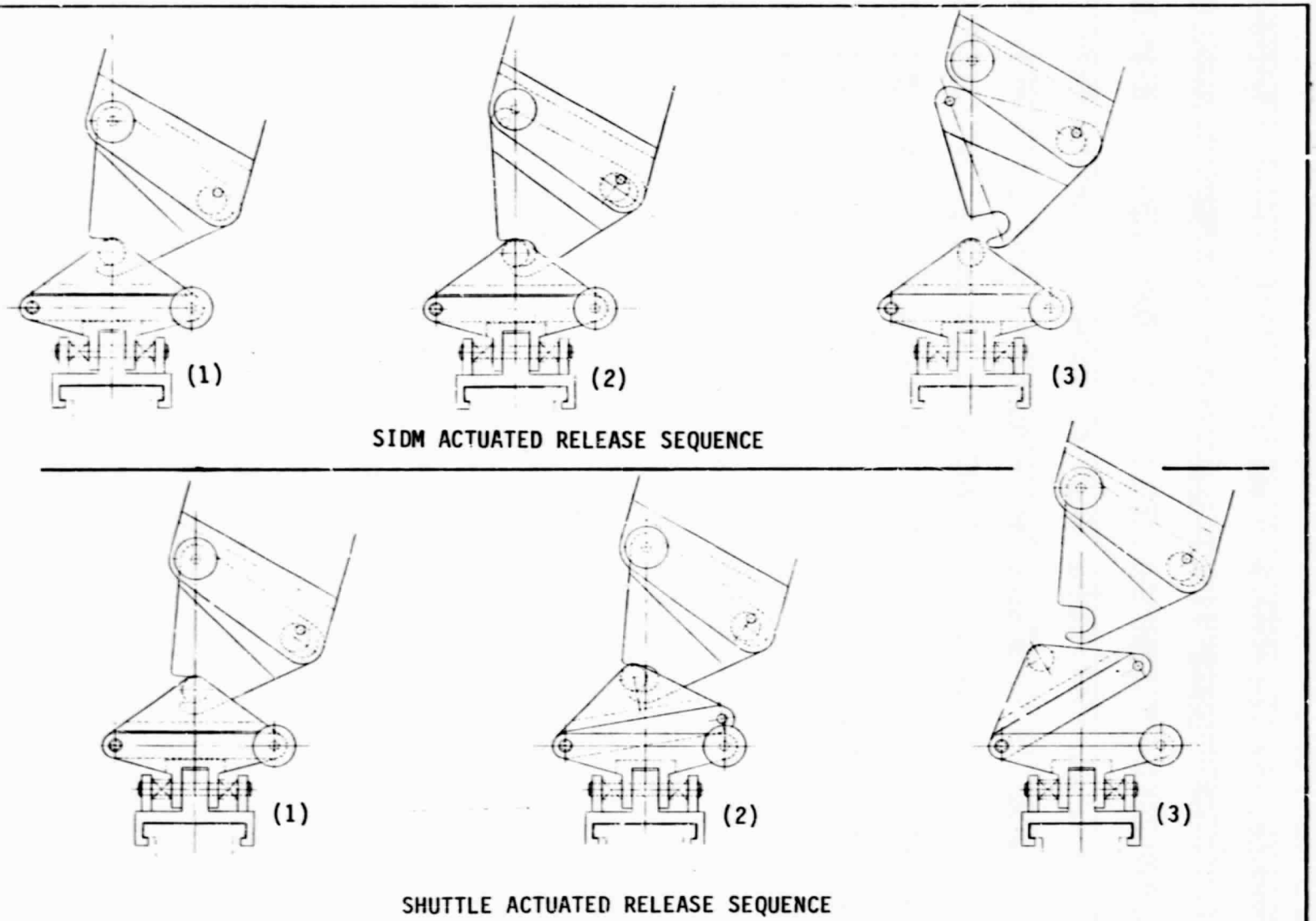

Figure 4-8 Shuttle Release Mechanism Sequences

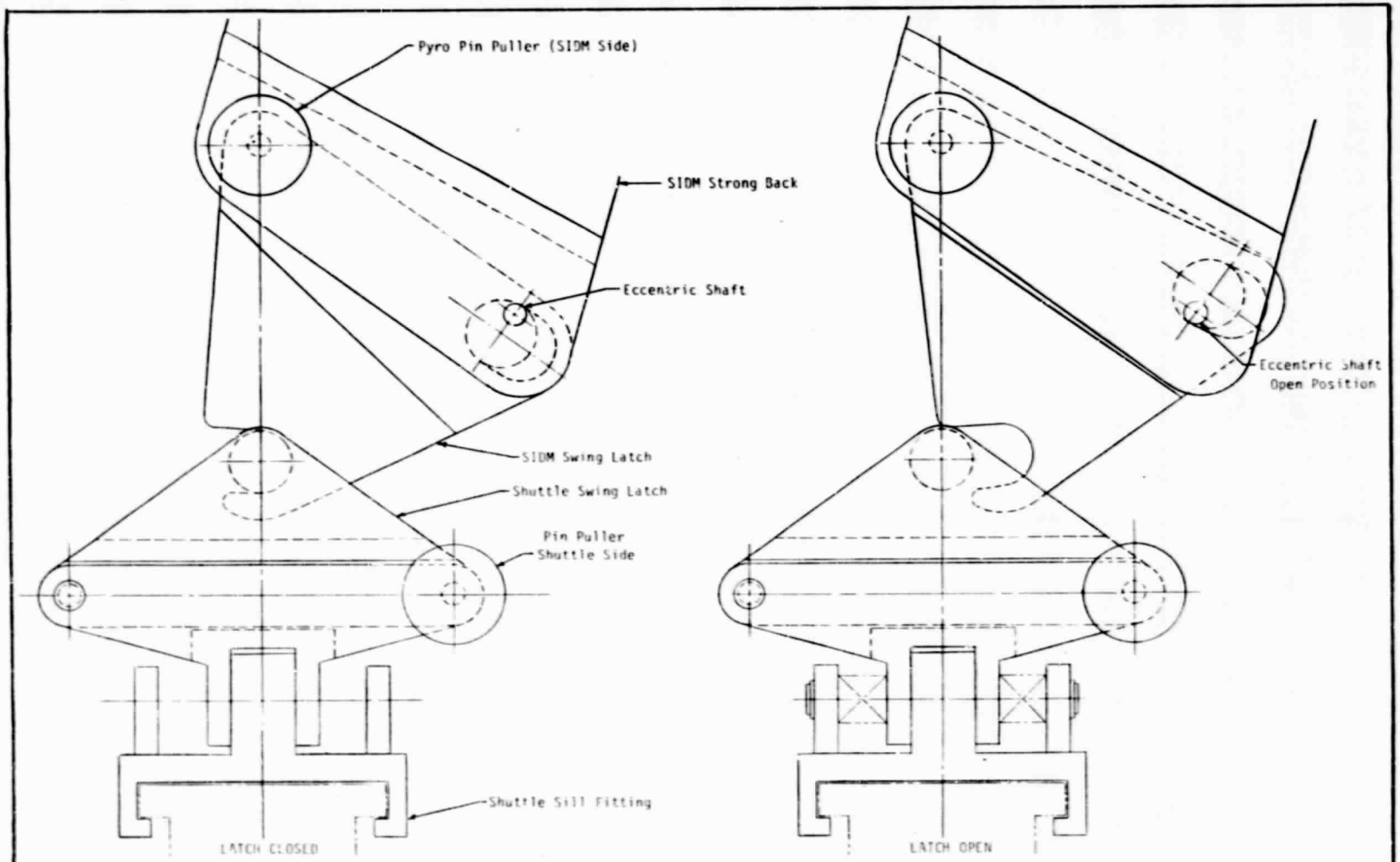

Figure 4-9 Manual Release Sequence for Shuttle Release Mechanism

The two centering springs shown are necessary to stabilize the fitting when the SIDM is not in place. It would not be desirable for the fitting to be loose during launch and landing. They also position the fitting in an upright position while the SIDM is being installed.

The SIDM latch pivot point contains an eccentric shaft. The eccentric shaft is manually activated by the "T" pin. See Figure 4-9. When the eccentric shaft is rotated, the latch will pivot to the release position allowing installation of the SIDM to the Shuttle sill fittings. After the SIDM is in position the "T" handle is rotated to latch the open face hook into the Shuttle side latch. This feature could be used as an additional back-up release method in case the pin release system should fail. This emergency condition would require that the tether first be severed by means of the SIDM guillotine. After cutting the tether the SIDM would then be secured prior to being jettisoned for later retrieval by an OMV mission from Space Station.

The dynamic release reaction of the SIDM must be studied further to insure that no possibility of collision with the Shuttle or cargo exists. In addition, the reaction dynamics of the SIDM if only one pin fires needs to be analyzed. More clearance may be required around the Shuttle payload than is shown here.

Figure 4-10 shows the placement of the Orbital Transfer Vehicle (OTV) on the upper tether deployment system. This assembly is the same design concept as the lower tether deployment system except for increased boom length. The additional length is required because the center of mass of Space Station is located closer to the lower end of the Space Station. The added length permits the same range of angular alignment for the tether angle during deployment.

The OTV will be placed on the Payload Deployment Module (PIDM) by the Space Station traveling remote manipulator and latched in place. On release of the latches, the OTV will separate with the aid of in-line thrusters in the PIDM. These thrusters will control the separation until tether tension reaches approximately four pounds at which time the gravity gradient tension forces will be used to complete the deployment process.

An analysis was made of the loads in the Space Station truss structure for the upper tether deployment system using a tension of 4000 pounds and with the tension alignment boom and carriage at maximum excursion (45 feet from center line). The resulting strain induced in the upper end of the Space Station keel structure caused 21 inches of displacement from the unstressed condition. This is over a length of approximately 300 feet from the Space Station center-of-mass to the upper deployment system. This is a preliminary estimate based on assumed characteristics of the Space Station structure and will need reverification. It has been deemed an acceptable effect for this study. In actuallity the maximum angular displacement and the maximum tension levels will not occur at the same time and the condition analyzed is an extreme worst case.

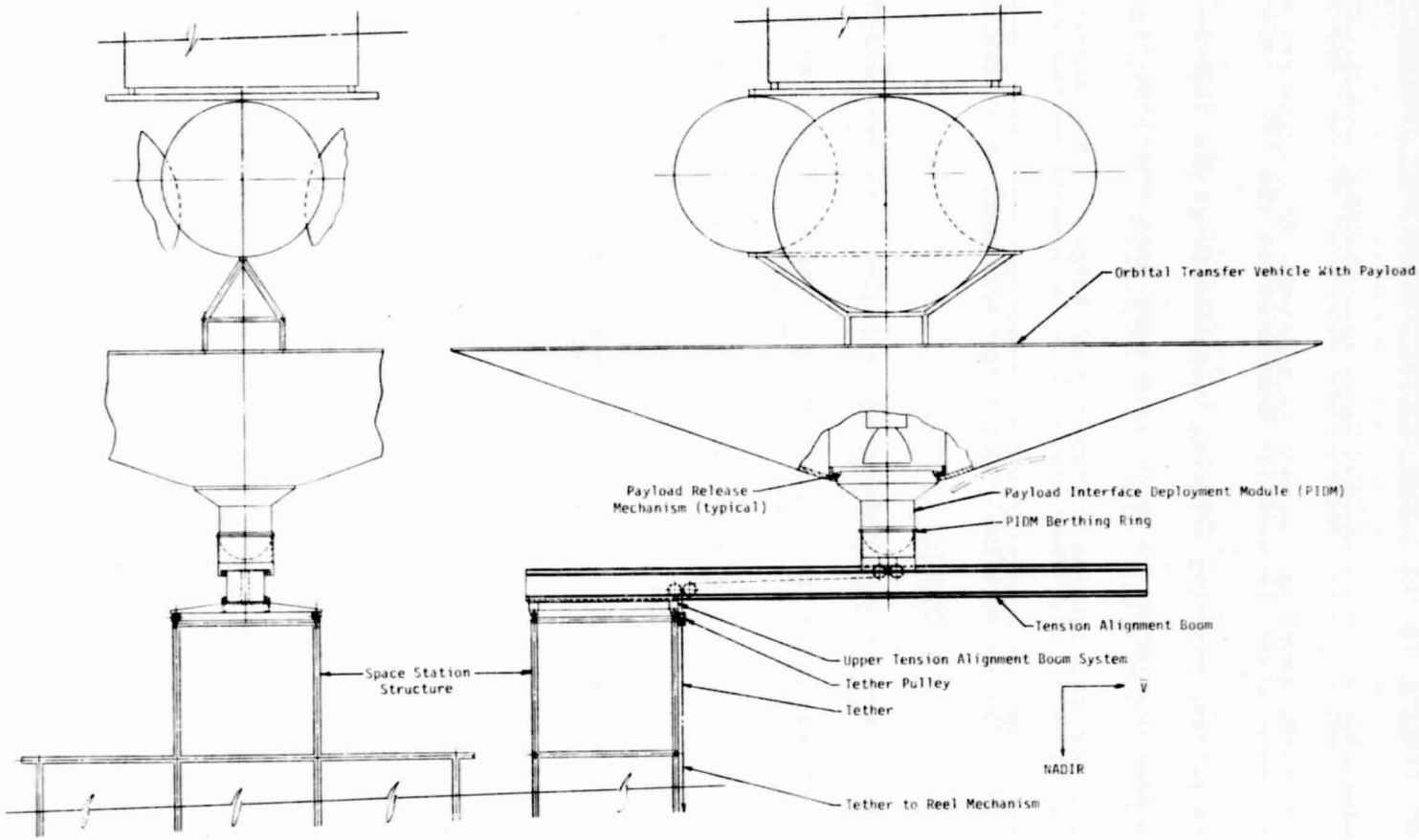

(Zenith Location on Space Station)

Figure 4-10 OTV Tether Deployment System

4.4 Performance Requirements for a Tether Deployment System for Shuttle

4.4.1 General Requirements

The deployment system is to be designed as a modular unit to be mounted into the Shuttle cargo bay by means of the standard payload trunnion fittings.

The module is to be compatible with a location either forward or aft of the payload to be deployed.

The design goal is to minimize the mass and the length of the assembly consistent with a reasonable range of performance capability for the overall system.

The primary sizing consideration for the system performance is set by the tether reel capacity. A decision was made to use the reel size from the Tethered Satellite System. This reel has an inner diameter of 38.5 inches and length of 48 inches. The payload deployment envelope of mass and tether length is to be determined by the amount of appropriately selected tether which can be carried on this reel.

4.4.2 Payload Interface Deployment Module (PIDM)

The system shall incorporate a PIDM which interfaces with the payload to be deployed by means of a grapple fixture mounted on the payload in a suitable location to accept the interface loads during tether deployment. The PIDM shall be capable of releasing from this grapple fixture under full tension load, and without inducing significant tip off angular rates in the payload. This release operation is to be remotely commanded from the Shuttle. The payload is to be installed onto the PIDM by the Shuttle RMS prior to the extension of the extendable boom. This payload installation operation is to be capable of being performed without requiring EVA.

The PIDM shall incorporate a cold gas attitude control and propulsion subsystem to provide the initial separation of the payload from the orbiter until the gravity gradient tension force builds up to adequate levels to complete the deployment. The system shall also provide location and attitude control capability for the PIDM during the final stage of retrieval operations.

The PIDM shall incorporate a tether guillotine or equivalent disconnect method to separate the tether from the PIDM.

The PIDM shall have a standard grapple fixture accessible to the Shuttle RMS for any required handling operations on board the Shuttle.

The PIDM shall incorporate a berthing/structural interface with a mating support structure on the end of the extendable deployment boom.

The PIDM shall incorporate a retro reflector to provide tracking capability by the Shuttle Ku Band tracking radar system.

The PIDM shall incorporate a command/control communications link with the Shuttle to provide statusing of on-board systems and control of the release and tether guillotine functions, and control of the propulsion/attitude control system.

4.4.3 Extendable Deployment Boom

The system shall incorporate an extendable deployment boom of adequate length to permit the initial deployment and the final retrieval operations to be performed away from the immediate vicinity of the cargo bay. The boom shall provide a structural interface to support the PIDM during Shuttle launch, re-entry and landing operations. It is also to be compatible with retrieval and berthing operations for the PIDM. It shall provide a retention latching capability for the PIDM which is remotely controlled by the Shuttle crew. The boom shall incorporate a tether guillotine near the outer most portion of the boom.

The boom shall be capable of reacting bending moments on the boom caused by the tether tension.

The boom shall incorporate a high temperature resistive load bank located near the outboard end to permit the deployment energy to be radiated to space as waste heat.

4.4.4 Reel Drive System

Control of the tether reel drive is to be by means of an electrical motor/generator drive which can either provide the tether braking forces during payload deployment or provide the reel-in tension for retrieval of the PIDM subsequent to release of the payload.

The reel shall incorporate a friction brake lock to hold the reel against tension forces once full tether deployment has been achieved.

The reel drive system is to be controlled by modulating the system in accordance with specified tension control laws designed to optimize the deployment and retrieval operations.

The reel drive system shall incorporate level wind mechanisms and tension control systems to maintain adequate tension levels on the reel at all times.

The drive system shall have a provision for a modular energy storage unit which can be sized to provide the retrieval energy required by the particular mission requirements. This sizing will include consideration of whether or not a contingency capability is to be provided to retrieve the payload in case of pre-release malfunction.

4.5 Tether Deployment System for Shuttle Payloads

The design concept for the tether deployment system for Shuttle payloads is adapted from the Tethered Satellite System (TSS) hardware currently under development. The major modifications are the elimination of the spacelab pallet as the structural interface with the Shuttle, the elimination of subsystems modules for support of scientific payloads, increased power requirements for the reel drive motor, and increased bending moment on the extendable deployment boom.

A decision was made to keep the tether reel size the same as TSS and to retain the same approach for the tether tension control, level wind mechanisms, and for the extendable deployment boom.

4.5.1 Payload Deployment Constraints

The capability to deploy payloads is a function of the payload mass, the length of the deployment tether and the capacity of the tether storage reel.

Using the TSS reel and a requirement that the tension level be less than 50% of ultimate strength for the Kevlar tether, the relationship between payload mass and deployment distance was calculated. This relationship is shown in Figure 4-11. This curve treats the relationship as though any desired tether diameter were available. In the actual case the curve must be further derated in accordance with the size step availability of tethers. The curve should be considered as an upper limit on the performance capability of the system to deploy payloads. As an example, using a maximum Shuttle cargo weight of 65,000 pounds and subtracting an estimated 5,000 pounds for the deployer system hardware, the curve indicates that the system could deploy a 60,000 pound payload spacecraft to a tether length of 62 km. Less massive payloads can be deployed to correspondingly longer tether distances.

4.5.2 Deployer Design Concept

The adapted version of the TSS hardware is shown in Figures 4-12a and 4-12b. The major apparent difference is the elimination of the Spacelab pallet and the provision of a direct structural interface to the Shuttle. This arrangement reduces the length required in the cargo bay by 18 inches.

The deployment boom is shown positioned centrally within the tubular support structure and with the PIDM latched in position directly above the boom stowage canister.

The reel and drive assembly, subsystem modules and the auxiliary battery module are shown attached to the tubular truss structure.

ORIGINAL PAGE IS
OF POOR QUALITY

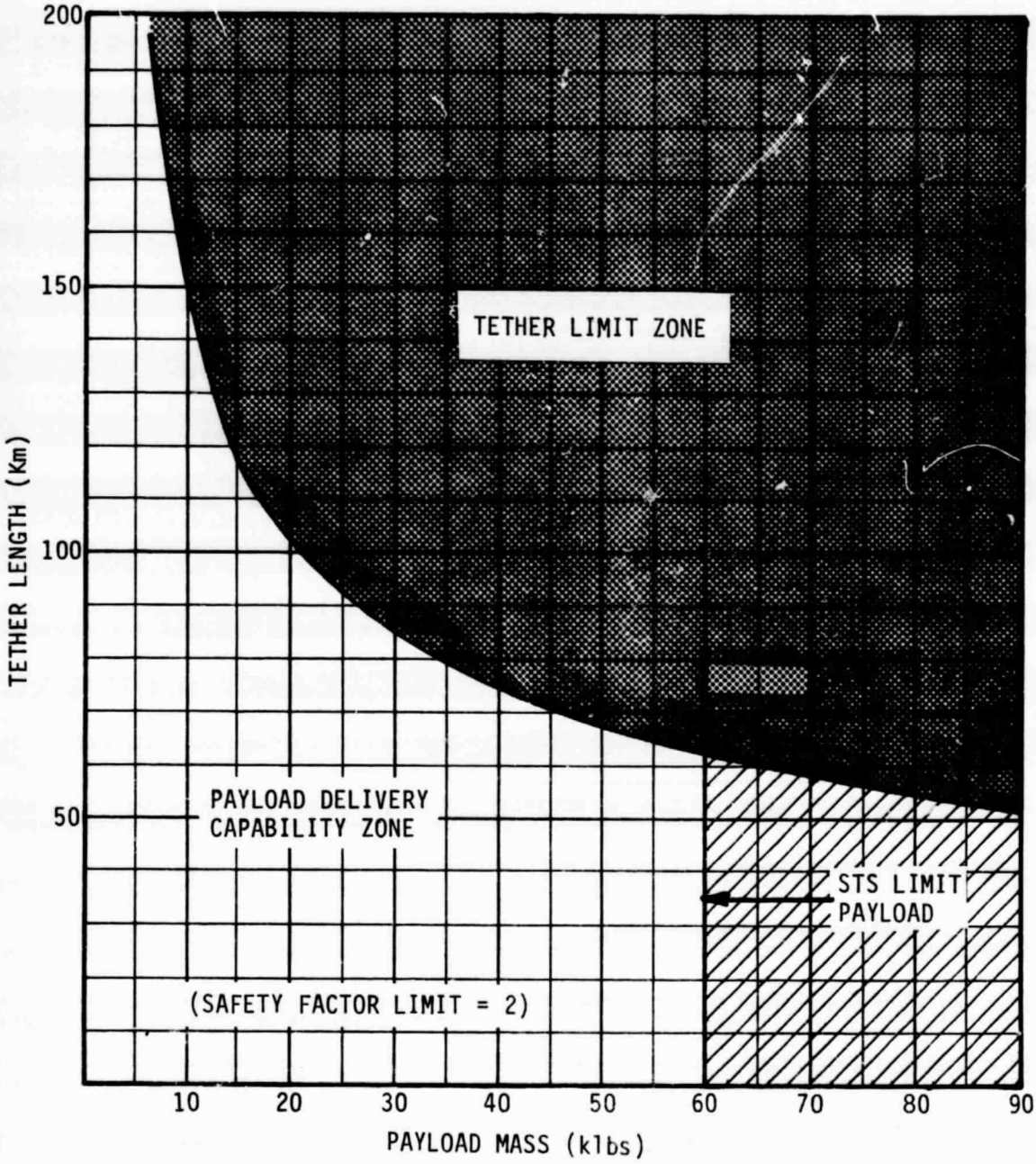

Figure 4-11 Deployed Payload Mass Versus Tether Length

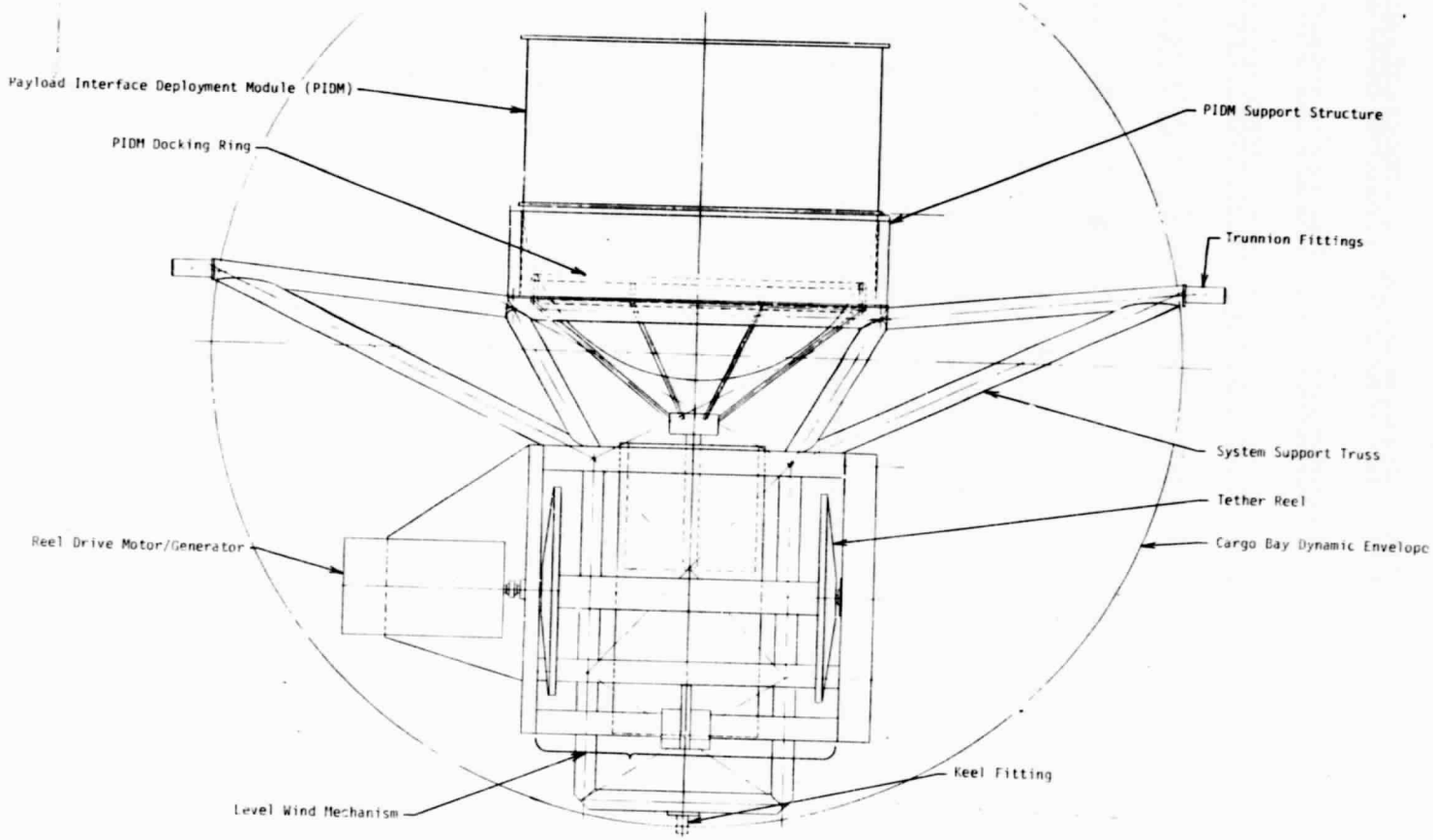

Figure 4-12a Tether Deployer System for Shuttle.

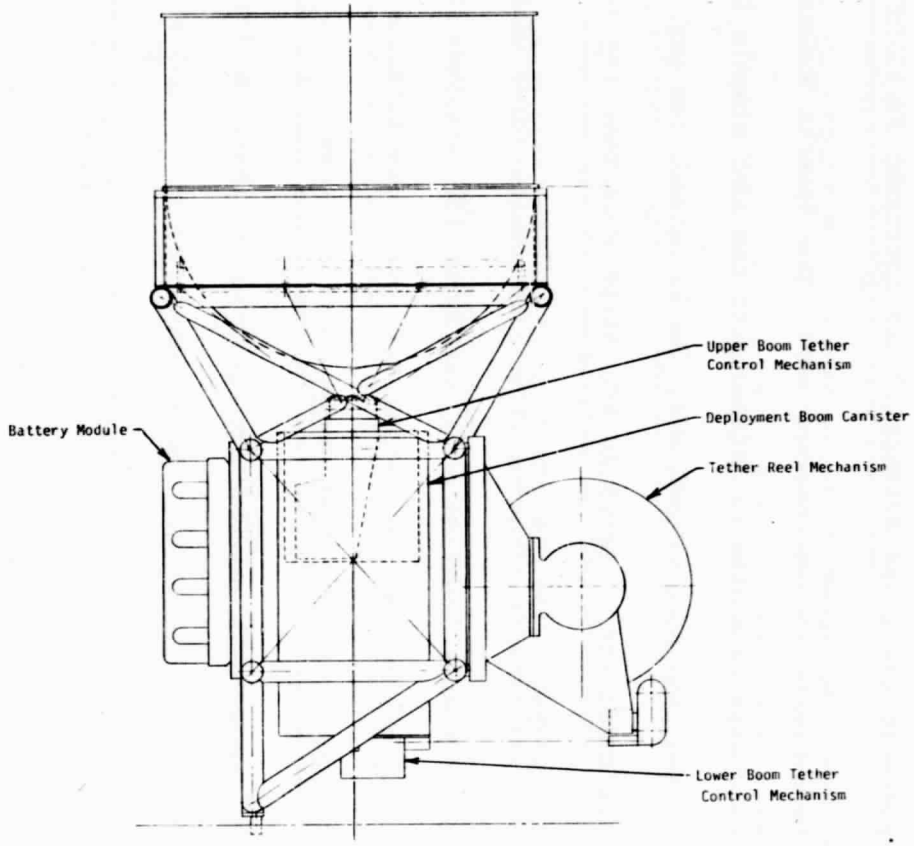

Figure 4-12b Tether Deployer System for Shuttle (Side View)

An estimated weight for the system shown is 3500 pounds (without tether and without the PIDM). This corresponds to a weight of approximately 5000 pounds for the corresponding version of the TSS. The most significant differences are the elimination of the Spacelab pallet and the deletion of the science support subsystems.

4.5.3 Operations Sequence

Figures 4-13a, 4-13b, and 4-13c show a typical sequence for payload deployment using the Advanced X-Ray Astronomy Facility (AXAF) as a representative example. The tether deployment system may be located as shown in Figure 4-13a in the aft region of the cargo bay or, alternatively in the forward end. The Shuttle Remote Manipulator System (RMS) will be used to position the AXAF onto the PIDM while the release mechanism is latched onto the AXAF grapple fixture. This is shown in Figure 4-13b. Once the payload spacecraft is mounted on the PIDM, the boom is extended. As it extends the guy wire cable is pulled out of the guy wire reels mounted on the cargo bay sills. These reels are attached to the sills such that the tether tension during deployment will be reacted through the guy wire cables rather than through a bending moment on the extended boom. The guy cable reels are located so as to align the tension force with the Shuttle center-of-mass. The relationship among these forces and the center-of-mass location will determine the attitude angle of the Shuttle during deployment. This attitude angle of the Shuttle is controlled to keep the tether well away from possible contact with Shuttle surfaces such as the tail. Any libration of the tether away from the vertical will be compensated by a change in the aspect angle of the Shuttle to keep the tension force directed along the guy cables. The guy cables will be pulled out of the stowage reels as the boom extends and lock into position to react the tension force as the boom reaches full extension. When the boom is retracted the guy cables will rewind onto the stowage reel by a negator spring drive. Figure 4-13c shows the location of the high temperature resistive load bank to be used to radiate excess energy generated by the reel braking motor during deployment of the payload. The load bank is located on the boom to provide a good view factor to space and to minimize radiant heating of cargo bay surfaces.

After the payload has been released, the tether is retrieved to where the PIDM is in the Shuttle vicinty. The PIDM cold gas propulsion attitude control system will be used during the final stages of capture and berthing. Once the PIDM is relatched into the berthing ring the boom is retracted to its stowed position and the system secured for re-entry.

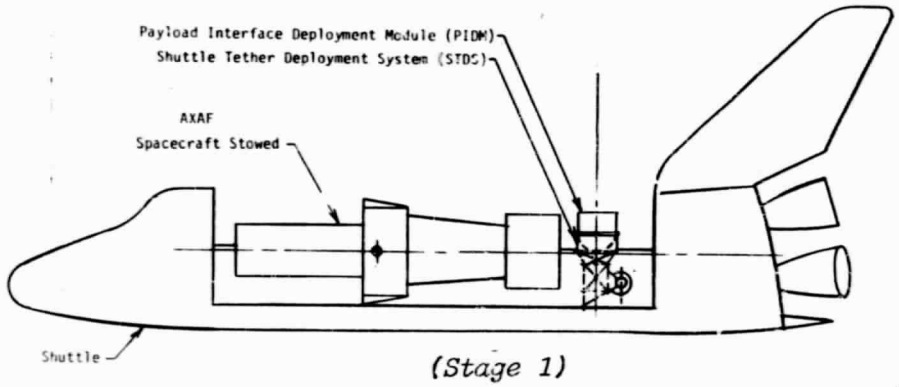

(Stage 1)

Figure 4-13a Shuttle Payload Deployment

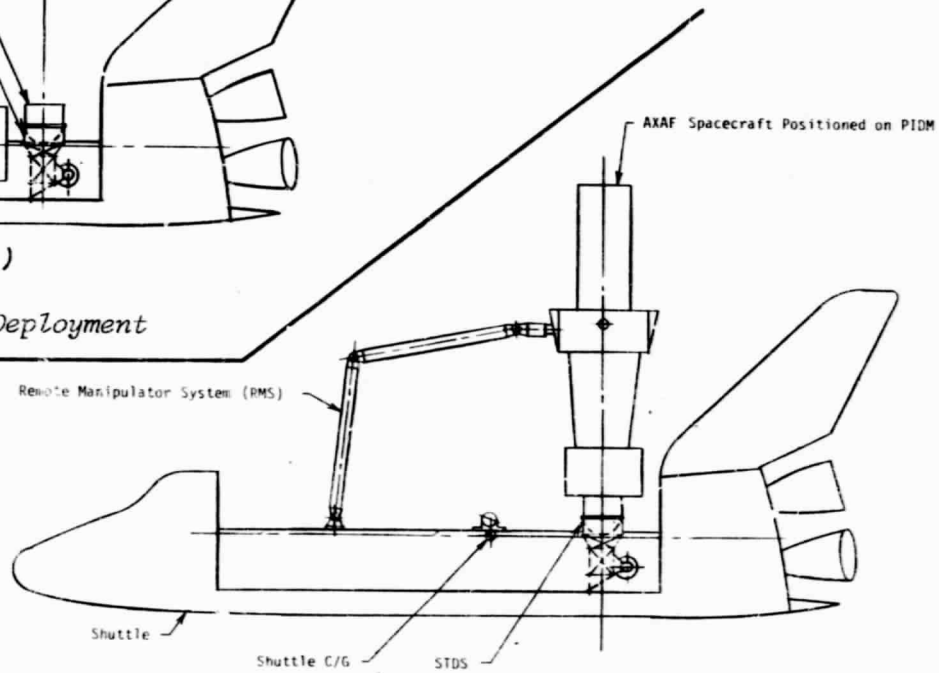

(Stage 2)

Figure 4-13b Shuttle Payload Deployment

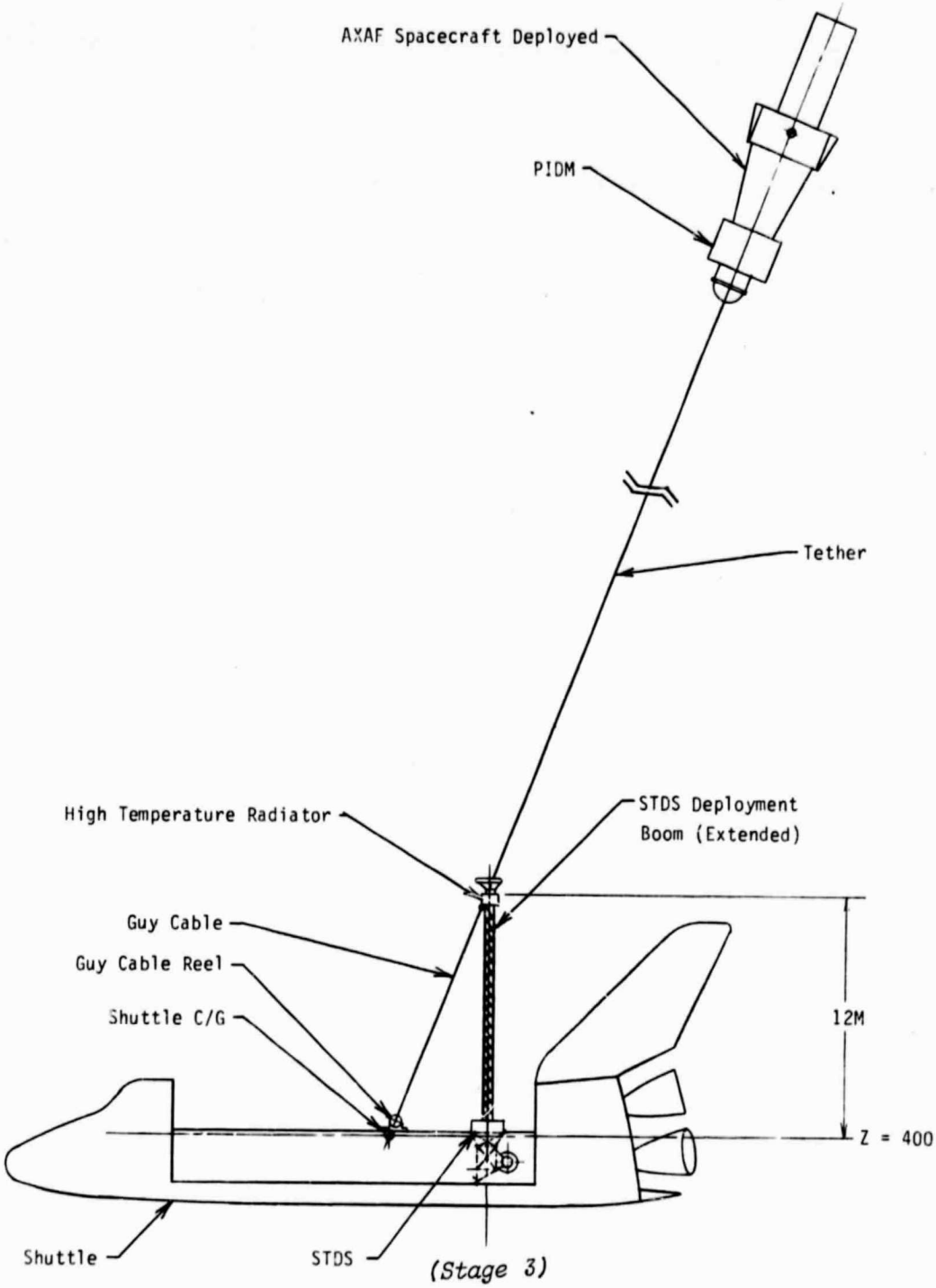

Figure 4-13c Shuttle Payload Deployment

5.0 CONCEPT TECHNICAL ISSUES

The major technical issues which have been identified for each of the Phase II baseline concepts are described in the following sections. These issues are intended to provide focus for follow-on concept definition efforts.

5.1 Concepts A2 and F

The similar nature of these application concepts means they share most of the same technical issues. Where an issue is unique to one only it will be noted.

Tether Recoil Dynamics - The issue here is can the tether be designed to incorporate sufficient internal damping to result in acceptable recoil characteristics in event of a severed tether while at maximum tension.

Tether Erosion/Abrasion Susceptibility - can a tether be designed to provide an adequate number of reuses.

Debris Collision - What is the probability of the tether being severed or damaged.

Deployment/Retrieval Energy Management - Can methods be identified to either use and/or store the energy generated during deployment and to supply the energy needed for retrieval.

Induced Acceleration - Can the Space Station operations accept the levels of acceleration induced by tether operations. This includes structural effects on solar arrays, radiators and antennae, and materials processing operations.

Orbital Perturbations - Can Space Station operations be modified to accept the orbit perturbations required by the angular momentum balance concept.

Structural Stress - Can the Space Station withstand the internal stress due to tensioned tether runs.

Tether Attachment Interface - (peculiar to F) What is an acceptable mode to impart tether tension loads into the AXAF mission stack.

5.2 Concept E2

Ionospheric Conductivity - Will the ionospheric conductivity behave as assumed in studies.

Plasma Contactors - Will the plasma contactors function per concept assumptions.

Cross Track Libration Dynamics - Will the cross track libration angles stay within an acceptable range.

Space Station Potentials - Can design solutions be found to safely accommodate the tether induced potentials on the Space Station.

5.3 Concept B

Tether Recoil - Can tether recoil be safely managed in event of a broken or severed tether.

Induced Acceleration Levels on Payload - Can the candidate payloads accept the induced acceleration levels and tether tension loads.

Energy Management - Can the energy management for deployment and retrieval be accommodated on board shuttle.

5.4 Concept C

Tether Service Life - Can the tether be designed to provide adequate service life under continuous usage.

Contingency Recovery - Can a platform be stabilized for subsequent recovery in event of a severed tether.

Induced Acceleration - Are the induced acceleration levels compatible with typical platform mission operations.

Platform Stability - Can adequate platform stability be achieved and maintained against anticipated perturbations.

Power Supply - How best can power and other utility services be supplied to the tethered platform.

5.5 Concept D

Rendezvous - Is it feasible to accomplish a rendezvous with the available levels of trajectory control and tracking.

Capture - What type of equipment will be required to effect successful capture in the short time available.

Docking - Once captured how are the residual velocities and angular rates damped out prior to hard docking the two vehicles.

Tethered OMV - Are the maneuver dynamics of the OMV controllable while suspended on the tether.

6.0 CONCEPT TECHNOLOGY DEVELOPMENT NEEDS

The recommended areas of technology development emphasis for each of the Phase II baseline concepts are given in the following sections:

6.1 Concepts A2 and F

Tether Construction - To achieve recoil damping, erosion and abrasion resistance, continuity sensing (for broken tether warning), and extended service life.

Tension Alignment - Tension alignment assemblies compatible with Space Station.

Tether Reel Design - Two stage reels designed to achieve maximum tension at different lengths. Level wind transition mechanisms and tension control devices.

Reel Drives - High power (75-150 horsepower) motor/generator high torque motors. Qualified for space operation.

Energy Management Technology - Includes high density energy storage methods and high temperature radiators for rejecting energy to space.

Propellant Transfer/Management - Gauging transfer and remote control disconnects for OMS bipropellant.

PIDM/SIDM Design - Design of the integrated systems required for the tether end effector deployment modules.

Release Mechanisms - Remotely controlled mechanisms capable of low tip off rate release.

6.2 Concept E2

Tether Construction - The tether must be designed to meet requirements in the following areas.

- Flexibility
- High conductivity to mass ratio
- Abrasion/erosion resistance
- Insulation against high voltage breakdown
- Thermal control properties
- Repairability on orbit

Plasma Contactors - The design of the plasma contactors and the required support systems - particularly for the out board end of the tether.

Tether Reel - Insulated reel design and high voltage termination of the tether including the high voltage circuitry to the power converter/processor circuit.

Tension Alignment - Tension alignment gear designed for compatibility with the high voltage tether and capable of compensating both in plane and cross track angles.

Simulations - Simulation codes for massive tethers with electrodynamic drag forces.

6.3 Concept B

Deployer Systems - Design for minimum weight, tether capacity, high tension drives.

Tether Construction - Design for recoil damping abrasion/erosion resistance, and continuity sensing.

Energy Management - Design to reject energy generated during deployment and supply retrieval energy. Includes high temperature radiators for waste heat rejection, and energy exchange interfaces with the Shuttle power system.

PIDM - Design of required subsystems including release mechanisms, cold gas propulsion/attitude control system, tether guillotine/disconnect, and communications, control, tracking systems.

6.4 Concept C

Tether Construction - Design for extended exposure durability and to incorporate utilities services such as fluids and power.

Reel System & Drive - Design for ease of deployment, retrieval and yo-yo stabilization maneuvers.

Berthing/Servicing - Design for ease of access to perform periodic maintenance and servicing of platform while retrieval to the Space Station.

6.5 Concept D

Simulation Programs - For trajectory prediction and for Tethered OMV maneuver dynamics.

Capture/Docking Hardware - Develop performance specifications and design concepts.

7.0 CONCLUSIONS

The following general conclusions are based on the results of the Phase II study:

A. The application of tether technology has the potential to significantly increase the overall performance efficiency and capability of the integrated space operations and transportation systems thru the decade of the 90's.

B. The primary concepts for which significant economic benefits have been identified are dependent on the use of Space Station as a storage device for angular momentum and as an operating base for the tether systems.

C. These Space Station based concepts must be coupled into operational pairs that are functionally related such that one concept uses the angular momentum derived from the other.

D. The outstanding candidate concept for the source of angular momentum is the tethered deorbit of Shuttle from Space Station. An ancilliary benefit is the significant quantities of bipropellant scavenged from the Shuttle during the tether deorbit operation.

E. Two alternative candidates have been identified as leading contenders for the role of angular momentum consumers. First is a tether launch assist to an OTV mission which uses the angular momentum to reduce propellant requirements for OTV. Second is an electrodynamic power tether which gradually converts the scavenged angular momentum into electrical power for use on the Space Station.

F. Concurrent usage of the OTV launch assist and the electrodynamic power tether concepts are not feasible. Electrodynamic power tether usage could start with Space Station. Tether launch assist to OTV cannot commence until the advent of the space based OTV circa 1995.

G. Use of these functionally related concepts require that provision for them be incorporated into the Space Station design concept.

H. Certain operational impacts on the Space Station are inherent with these tether applications. The primary ones are the acceleration levels induced by tether deployments, and the orbit perturbations caused by tether mediated angular momentum transfers.

I. Tether deployment of masses such as the Shuttle or OTV mission stacks present significant energy management problems. Deployment generates significant quantities of energy which must be used, stored or rejected to space. Retrieval requires smaller but still significant quantities of energy to be supplied to the tether retrieval system.

J. Any overall strategy for tether usage must consider the compatibility aspects for those concepts using the Space Station as an operations base.

K. Economic benefits to be derived from the use of tethered platforms from Space Station has not been analyzed during this study phase. However, it should be noted that the use of such platforms would not be compatible with those concepts for which significant benefits have been identified.

L. Tethered OMV rendezvous concept for retrieval of returning OTV is not economically viable.

M. While tether insertion of AXAF from Shuttle does not present a unique performance capability and is not economically advantageous. Other missions do exist where the orbit insertion capability is unique to the tether method.

8.0 RECOMMENDATIONS

Recommendations based on this study effort are grouped by functional sets.

8.1 Angular Momentum Balance Concepts (A2 with F, A2 with E2)

These recommendations relate to the following concepts:

A2 - Tether Deorbit of Shuttle from Space Station
E2 - Electrodynamic Power Tether for Space Station
F - Tether Launch Assist to OTV Mission from Space Station

A. Continue to pursue the definition of these concepts as top priority and including:

- Space Station integration requirements definition
- Trade studies of relative merits of pairing A2 with E2, A2 with F, and transition from one to the other.

B. Perform an assessment of incorporating capability to transfer OMS propellant into the Shuttle.

C. Brief Space Station and OTV program staffs on potential tether application benefits.

D. Initiate technology development activities in key areas to resolve technical issues identified.

8.2 Tether Deployment from Shuttle (Concept B)

Although the Concepts B and B1 involving tether insertion of AXAF did not identify any outstanding benefits, it should be remembered that there are areas of performance where the tether deployment provides unique capabilities. The AXAF operational orbit is barely within the Shuttle direct injection capabilities limit. For missions inside this Shuttle performance envelop the tether deployment is not justifiable, however, for missions requiring higher orbits the tether provides a significantly enlarged performance envelop.

Recommendations are:

E. Develop parametric performance envelop for an optimized Shuttle tether deployer system to identify areas of unique performance capability.

F. Continue concept definition studies to define an optimized performance design for the deployer system. (Optimize mass, tension limits, tether length/volume, energy management).

8.3 Tethered Platforms (Concept C)

Recommendations are:

G. Develop methods to provide utilities support (power, fluids) to the platforms via the tether.

H. Define retrieval/servicing operations

8.4 Tethered Rendezvous (Concept D)

This study has shown there is no economic benefit justification for further study effort on this concept. Recommendation:

I. Discontinue study effort on this concept

8.5 Other Concepts

During the course of the study, other interesting areas have been identified which could be of significant benefit. Preliminary studies are recommended to explore the merits of the following application areas:

J. Use of a tether deployed mass to provide a collision avoidance maneuvering capability to Space Station. This would be an ancillary benefit from Concept A2 for the tether deorbit of Shuttle.

K. Tether deployment of Space Station waste packages for disposal by burn-up re-entry.

L. Utilization of a tether from Space Station to perform a residual propellant scavenging from an external tank with subsequent tether deorbit of the tank.

M. Tether launch assist to expendable launch vehicles from both Shuttle and Space Station.

APPENDIX A

EQUATIONS AND REFERENCES USED FOR DETERMINATION OF PROPELLANT REQUIREMENTS

A. SHUTTLE DIRECT INSERTION MISSIONS

Refs: (1) Performance Estimation Technique for Space Shuttle Direct Orbit Insertion Missions - ETR Missions, JSC, Oct. 1982.
(2) JSC, Approximate reentry ΔV requirement from circular orbits (via Mac Croft of MSFC), Sept. 1984.
(3) Shuttle Systems Weight and Performance - Monthly Status Report, JSC, 18 May 1982 (for typical OV103 orbiter weight data and external tank weight).

1. Obtain ΔV_1 (OMS insertion ΔV at apogee, summarized in Figure 3-3).
Assumption No. 1: $h_{perigee\ (typical)}$ = 27 NMI (from Ref. 1)

a) Circular orbits

$$\Delta V_1 = V_{CA} - V_A$$

$$\Delta V_1 = \frac{\sqrt{\mu} - \sqrt{\frac{2R_p\mu}{R_A + R_p}}}{\sqrt{R_A}} \quad ; \quad R_{(ft)}, \Delta V_{(FPS)} \text{ generally} \qquad (1)$$

where: V_{CA} = circular orbital velocity at apogee

V_A = velocity at apogee

μ = GM = 1.4076452×10^{16} ft^3/sec^2

R_P = radius of perigee

R_A = radius of apogee

R_E = radius of earth = 3444 NMI

R = R_E + h(altitude)

6076.1 ft/NMI

b) Elliptical orbits

$$\Delta V_1 = V_{A_2} - V_{A_1}$$

$$\Delta V_1 = \frac{\sqrt{\frac{2R_{P_2}\mu}{R_A + R_{P_2}}} - \sqrt{\frac{2R_{P_1}\mu}{R_A + R_{P_1}}}}{\sqrt{R_A}} \qquad (2)$$

where: V_{A_1} = velocity of apogee of direct insertion ellipse

V_{A_2} = velocity of apogee of final elliptical orbit

R_{P_1} = radius of initial perigee

R_{P_2} = radius of final perigee

R_A = radius of common apogee

and $V_A = \sqrt{\frac{2R_P\mu}{R_A(R_A+R_P)}} = \sqrt{\frac{(1-e)\mu}{R_A}}$

A. SHUTTLE DIRECT INSERTION MISSIONS (Cont)

2. Obtain ΔV_2 (OMS total deorbit ΔV, summarized in Figure 3-4).

a) From circular orbits (ΔV_{2C})

Assumption No. 2: (from Ref. 2) →

$h_{circular}$ (NMI)	ΔV_{2C} (FPS)
$h < 130$	276
$130 < h < 170$	$.72h+183$
$170 < h < 230$	$1.30h+84$
$h > 230$	$1.46h+48$

(3)

where: h is in NMI
and ΔV_{2C} = deorbit ΔV from circular orbit (FPS)

b) From elliptical orbits via 100 NMI circular (elliptical orbits with 100 NMI perigee)

$$\Delta V_{2EC} = V_{P100} - V_{C100} + 276 \text{ (from a)}$$

$$\Delta V_{2EC} = \frac{\sqrt{\frac{2R_A \mu}{R_A + R_P}} - \sqrt{\mu}}{\sqrt{R_P}} + 276 \qquad (4)$$

where: ΔV_{2EC} = total deorbit ΔV (FPS) (2 burns) from apogee of elliptical orbit to 100 NMI circular to deorbit

V_{P100} = perigee velocity (100 NMI)

V_{C100} = circular orbit velocity (100 NMI)

R_P = radius of perigee (100 NMI)

and $V_P = \sqrt{\frac{2R_A \mu}{R_P(R_A+R_P)}} = \sqrt{\frac{(1+e)\mu}{R_P}}$

c) from apogee of elliptical orbit (direct)

$$\Delta V_{2E} = \Delta V_{2C} - (V_{CA} - V_A)$$

$$\Delta V_{2E} = \Delta V_{2C} - \left(\frac{\sqrt{\mu} - \sqrt{\frac{2R_P \mu}{R_A+R_P}}}{\sqrt{R_A}} \right) \qquad (5)$$

where: ΔV_{2E} = direct deorbit ΔV from apogee of elliptical orbit

ΔV_{2C} = deorbit ΔV from circular orbit at apogee altitude (from a)

V_{CA} = circular orbital velocity at apogee

V_A = velocity at apogee before deorbit burn

A. SHUTTLE DIRECT INSERTION MISSIONS (Cont)

3. Obtain (ΔW_P) propellant required for ascent and deorbit (summarized in Figure 3-5).

   a) Obtain initial orbiter weight at initiation of first OMS burn (W_0)

      Use Refs. (1) and (3) from Page 1 and obtain W_0 as described in Table 3-6.

   b) Calculate ΔW_P

$$\Delta W_P = 1.075 W_0 \left[1 - e^{-\Delta V/gI_{sp}}\right] \qquad (6)$$

where: 1.075 = factor for OMS propellant margin

W_0 = orbiter weight at start of first OMS burn

e = 2.7183. . . (natural log, base)

ΔV = $\Sigma\Delta V = \Delta V_1 + \Delta V_2$ (appropriate ΔV_1 & ΔV_2 from A.1 and A.2)

g = reference g = 32.174FPS

I_{SP} = 313.2 sec.

4. Compare alternatives to obtain ΔW_P savings (Figure 3-5)

B. OMV DELIVERY MISSIONS

Assumptions No. 3: Use current (Nov. 84) approximate characteristics of Martin Marietta Aerospace storable bi-prop reusable OMV as follows (per Table 3-8):

W_{BO} (burnout wt) = 6525 lb (1)

W_{PU} (usable propellant) = 8075 lb (maximum)

W_i (initial stage wt) = 14600 lb (maximum)

Propellant = N_2O_4/MMH

I_{SP} = 306 sec. (vacuum)

(1) Includes 5% allowance for RCS plus propellant margins (held constant for all propellant loadings - first order estimate)

Assumption No. 4: Static tether releases above the space station with tether length limited to 150 km maximum.

Assumption No. 5: Tether launch OMV to apogee of desired orbit.

1. Procedure
   - o Off-load propellant as required for mission
   - o Investigate untethered and tethered launches
   - o All launches from Space Station at 270 NMI
   - o OMV delivers payload to orbit and returns empty to Space Station
   - o All launches in-plane

B. OMV DELIVERY MISSIONS (Cont)

1. Procedure (Cont)

a) Obtain $\Sigma\Delta V$ for ascent (ΔV_1), untethered for selected h_A values

$$\Delta V_1 = \Delta V_p + \Delta V_A$$

$$\Delta V_1 = (V_P - V_{CP}) + (V_{CA} - V_A)$$

$$\Delta V_1 = \frac{\sqrt{\frac{2R_A \mu}{R_A+R_P}} - \sqrt{\mu}}{\sqrt{R_P}} + \frac{\sqrt{\mu} - \sqrt{\frac{2R_P \mu}{R_A+R_P}}}{\sqrt{R_A}}$$

$$\text{or } \Delta V_1 = \sqrt{\mu}\left[\frac{\sqrt{\frac{2R_A}{R_A+R_P}} - 1}{\sqrt{R_P}} + \frac{1 - \sqrt{\frac{2R_P}{R_A+R_P}}}{\sqrt{R_A}}\right] \qquad (7)$$

b) Obtain $\Sigma\Delta V$ for descent (ΔV_2), untethered for previously selected h_A values

$\Delta V_2 = \Delta V_1$ (from a)

Note: R_P = Space Station orbit radius (3714 NMI)

R_A = Final orbit radius

c) Select incremental altitude of OMV/payload above mass center (Δh_U), tethered case (mass center at 270 NMI).

$\Delta h_U = 0$ for $L_{tether} = L = 0$

$$\text{where } \Delta h_U = \left(\frac{W_S}{W_U + W_S}\right) L \qquad (8)$$

where: W_S = Space Station Mass (551 KLB)

W_U = OMV/payload mass (or upper mass)

L = Tether length

Note: $h_S = h_U - L$

Vary Δh_U from 0 to maximum value required for problem, considering payload and tether length limitations.

d) Obtain data required to calculate ΔV_1 & ΔV_2, tethered cases.

$$R_P = R_S + \Delta h_U \qquad (9)$$

$$V_{P(FPS)} = 6076.1\ R_{P(NMI)}\dot{\Theta}_{270} \qquad (10)$$

where $\dot{\Theta}_{270}$ = .00110677 rad/sec

$$R_A = \frac{R_P^2\ V_P^2}{2\mu - R_P V_P^2} \qquad (11)$$

B. OMV DELIVERY MISSIONS (CONT)

1. Procedure (Cont)

$$h_A = R_A - 3444 \text{ (NMI)} \tag{12}$$

$$a = (R_A + R_P)/2 \tag{13}$$

$$V_A = \frac{\mu}{aV_P} \tag{14}$$

$$V_{CA} = \sqrt{\frac{\mu}{R_A}} \tag{15}$$

e) Obtain ΔV_1 & ΔV_2, tethered cases as a function of Δh_U

$$\Delta V_1 = V_{CA} - V_A \tag{16}$$

from eqns. 14 and 15

$$\Delta V_2 = \Delta V_P + \Delta V_A$$

$$\Delta V_2 = \sqrt{\mu}\left[\frac{\sqrt{\frac{2R_A}{R_A+R_P}} - 1}{\sqrt{R_P}} + \frac{1 - \sqrt{\frac{2R_P}{R_A+R_P}}}{\sqrt{R_A}}\right]$$

from eqn. 7

where: R_P = Space Station nominal radius (3714 NMI)

Assumption No. 6: Small changes in Space Station orbit do not significantly affect ΔW_P calculation since ΔV_2 is for returning stage without payload (first order approximation).

f) Find W_{PU} (usable propellant) required, untethered case. ($\Delta h_U = 0$, summarized in Figure 3-6).

$$W_{PL} = \frac{W_{PU} + W_{BO}(1 - M_1M_2)}{M_1 - 1}$$

(for delivering payload and returning empty stage)

or for selected payloads (W_{PL})

$$W_{PU(required)} = W_{PL}(M_1-1) + W_{BO}(M_1M_2-1) \tag{17}$$

where: $M_i = e^{\Delta V_i/gI_{SP}}$ (18)

$\Delta V_1 = \Delta V_2$ from a

I_{SP} = 306 sec.

g = 32.174 ft/sec^2

W_{BO} = 6525 lb.

B. OMV DELIVERY MISSIONS (CONT)

1. Procedure (Cont)

g) Find W_{PU} & L required, tethered cases, as a function of Δh_U and W_{PL} (summarized in Figure 3-6).

Using ΔV_1 and ΔV_2 as a function of Δh_U (determined in e).

W_{PU} (required) = $W_{PL}(M_1-1) + W_{BO}(M_1M_2-1)$ from eqn. 17 for selected payloads.

$L = \Delta h_U / \left(\frac{W_S}{W_U+W_S}\right)$ from eqn. 8

where $W_U = W_{PL} + W_{PU(req'd)} + W_{BO}$ (19)

2. Compare tethered cases to untethered cases to obtain ΔW_P savings for OMV (summarized in Figure 3-7).

a) Plot h_{orbit} $\overline{vs}$ $W_{PU_{required}}$ for all cases at given payload values

b) Plot h_{orbit} $\overline{vs}$ L (tether) for tethered cases at given payload values

c) Plot $\Delta W_{P\ savings}$ (tethered $\overline{vs}$ untethered) at given W_{PL} values vs final orbit altitude using Plot a) data. Plot constant L values using Plot b) data.

C. OTV DELIVERY MISSIONS

Assumption No. 7: Use estimated characteristics of Martin Marietta Aerospace Aft Cargo Carrier (ACC) OTV as follows:

Aero braked reusable OTV W_{BO} (burnout wt) = 6434 lb. (1)

W_{PU} (usable propellant) = 53577 lb. (max.)

W_I (initial stage wt) = 60011 lb (max.)

Propellant = LO_2/LH_2

I_{SP} = 460 sec (vacuum)

(1) Includes allowance for RCS and propellant margins (held constant for all propellant loadings - first order estimate).

Assume - Static tether releases above Space Station (Ref. Assumption 4)

Assume - Tether length limited to 150 km (Ref. Assumption 4)

Assumption No. 8: All plane changes at apogee (first order estimate) (28.5 deg)

C. OTV DELIVERY MISSIONS (CONT)

Assumption No. 9: ΔV requirements for geosynchronous mission from 270 NMI (untethered)

$\Delta V_1 = \Delta V_P + \Delta V_A$ + 350 (FPS) (losses and mid-course maneuvers)

ΔV_1 = 14091 FPS

$\Delta V_2 = \Delta V_{A_2} + \Delta V_{A_3}$(350 FPS) (after aerobraking) + 50 (midcourse maneuvers)

ΔV_2 = 6445 FPS (geo to 50 NMI and up to ~250 NMI circ)

1. Procedure

o Off-load propellant as required

where:

$$\Delta V_{A_{1,2}} = \sqrt{V_{A_{1,2}}^2 + V_{CA}^2 - 2V_{A_{1,2}}V_{CA}\cos 28.5} \quad \text{Equation (20)}$$

o Investigate untethered/tethered launches

o OTV delivers payload to geo and returns empty stage

o All launches from Space Station (270 NMI)

a) Obtain W_{PU} (usable propellant) required, untethered cases (Δh_U=0), (summarized in Figure 3-8)

$M_i = e^{\Delta V_i / gIsp}$ from eqn. 18

where: ΔV_1 = 14091 FPS
ΔV_2 = 6445 FPS
for selected payloads (W_{PL})

and $W_{PU} = W_{PL}(M_1-1) + W_{BO}(M_1M_2-1)$ from eqn. 17.

b) Obtain data required to calculate ΔV_1, & ΔV_2, tethered cases, <u>for selected Δh_U</u> (as in OMV procedure)

(constant) $R_{A_{1,2}}$ = 22816 NMI (geosynchronous orbit radius)

(constant) R_{P_2} = 3494 NMI (50 NMI aerobrake altitude)

R_{P_1} = 3714 NMI (mass center) + Δh_U (selected) (from 9)

V_{P_T} (velocity of tether tip) = 6076.1 $R_{P_{1(NM)}}\dot{\Theta}_{270}$(rad/sec) (from 10)

where $\dot{\Theta}_{270}$ = .0011067 rad/sec

$$V_{P_1} = \sqrt{\frac{2\mu R_{A_1}}{R_{P_1}(R_{P_1}+R_{A_1})}} \quad (21)$$

$$\Delta V_{P_1} = V_{P_1} - V_{P_T} \quad (22)$$

C. OTV DELIVERY MISSIONS (CONT)

$$V_{A_1} = \sqrt{\frac{2\mu R_{P_1}}{R_{A_1}(R_{P_1} + R_{A_1})}} \qquad \text{from (2)}$$

$$\Delta V_{A_1} = \sqrt{V_{A_1}^2 + V_{CA}^2 - 2V_{A_1}V_{CA}\cos 28.5} \qquad \text{from (20)}$$

where V_{CA} = 10077FPS (Geo)

c) Obtain ΔV_1 & ΔV_2, tethered cases as a function of h_U.

$$\Delta V_1 = \Delta V_{P_1} + \Delta V_{A_1} + 350 \qquad (23)$$

(ΔV_{P_1} & ΔV_{A_1} from b)

ΔV_2 = 6445 FPS (same as a)

Note: Approximation for ΔV_2 can change for longer tether lengths due to larger changes in SS orbit (beyond scope here).

d) Find W_{PU} and L required, tethered cases, as a function of Δh_U and W_{PL}, (summarized in Figure 3-8).

$$M_i = e^{\Delta V/gI_{SP}} \qquad \text{from eqn. 17 (P-10)}$$

I_{SP} = 460 sec.

g = 32.174 FPS

W_{BO} = 6434 lb

$$W_{PU_{(req'd)}} = W_{PL}(M_1-1) + W_{BO}(M_1M_2-1)$$

from eqn. 17 for selected payloads

$$L = \Delta h_U \Big/ \left(\frac{W_S}{W_U+W_S}\right) \qquad \text{from eqn. 8}$$

where $W_U = W_{PL} + W_{PU_{(req'd)}} + W_{BO}$ from eqn. 19

2. Compare tethered cases to untethered cases for various payloads vs L to find ΔW_P savings (summarized in Figure 3-9)