General Disclaimer

One or more of the Following Statements may affect this Document

- This document has been reproduced from the best copy furnished by the organizational source. It is being released in the interest of making available as much information as possible.

- This document may contain data, which exceeds the sheet parameters. It was furnished in this condition by the organizational source and is the best copy available.

- This document may contain tone-on-tone or color graphs, charts and/or pictures, which have been reproduced in black and white.

- This document is paginated as submitted by the original source.

- Portions of this document are not fully legible due to the historical nature of some of the material. However, it is the best reproduction available from the original submission.

Produced by the NASA Center for Aerospace Information (CASI)

JPL NO. 9950 – 1008

(NASA-CR-175731) CONCEPTS AND COST TRADE-OFFS FOR LAND VEHICLE ANTENNAS IN SATELLITE MOBILE COMMUNICATIONS Final Report (Ball Aerospace Systems Div., Boulder) 97 p HC A05/MF A01 CSCL 17B G3/32 N85-25680 Unclas 21102

CONCEPTS AND COST TRADE-OFFS FOR LAND VEHICLE ANTENNAS

IN SATELLITE MOBILE COMMUNICATIONS

956686

FINAL REPORT
F84-10

JULY 1984

RECEIVED
NASA STI FACILITY
ACCESS DEPT.

SUBMITTED TO:

JET PROPULSION LABORATORY
CALIFORNIA INSTITUTE OF TECHNOLOGY
PASADENA, CALIFORNIA

Ball Aerospace Systems Division

BOULDER, COLORADO 80306

Final Report

F84-10

CONCEPTS AND COST TRADE-OFFS FOR LAND VEHICLE ANTENNAS IN SATELLITE MOBILE COMMUNICATIONS

July 1984

Submitted to:

Jet Propulsion Laboratory (JPL)
California Institute of Technology
Pasadena, CA

Prepared by:

H. A. Haddad
Program Manager

Approved by:

R. E. Munson, Manager
Advanced Antenna Programs Dept.

FOREWORD

Ball Aerospace Systems Division (BASD), Boulder, CO, submits this Final Report to JPL, Pasadena, California in fulfillment of JPL Contract Number 956686.

This report was prepared for the Jet Propulsion Laboratory, California Institute of Technology, sponsored by the National Aeronautics and Space Administration.

SUMMARY

In this report, we present several antenna design concepts, operating at UHF (821-825 MHz transmit and 866-870 MHz receive bands), with gain ranging between 6 and 12 dBic, that are suitable for land mobile vehicles. The antennas may be used within CONUS and ALASKA to communicate to and from a geosynchronous satellite.

Depending on the type of steering mechanism, the antennas are broken down into three categories; (1) electronically scanned arrays with phase shifters, (2) electronically switched arrays with switchable power dividers/combiners and (3) mechanically steered arrays. We have made analytical investigation of their overall pattern, gain and axial ratio performances. Generally, the nonconformal designs have better gain performance at low elevation angles and less gain variation over the coverage region than the conformal designs.

The operating characteristics of two of these design concepts, one a conformal antenna with electronic beam steering and the other a nonconformal design with mechanical steering, were evaluated with regard to two and three satellite system. Preliminary results indicate that these antennas have better isolation in the two satellite system which are more widely spaced than the three satellite system which are closely spaced.

Cost estimates of various antenna concepts were made and plotted against their overall gain performance. The results indicate that for production quantities of 10,000 units or lower, produced in a time span of three years, the mechanically steered antennas will have the lowest cost. It should be noted, however, that the selection of these antennas may not entirely be based on price alone. Other factors such as low profile and aesthetic considerations may play an important role in the selection of mobile vehicle antennas.

TABLE OF CONTENTS

Section	Title	Page
	Forward	ii
	Summary	iii
	Table of Contents	iv
	List of Figures	vi
	List of Tables	vii
1	INTRODUCTION	1-1
2	ANTENNA SYSTEM	2-1
	2.1 Antenna Categories	2-1
	2.2 Radiating Elements	2-1
	2.3 Control and Steering Mechanism	2-3
	2.3.1 The AGC Method	2-3
	2.3.2 The Monopulse Method	2-5
	2.3.3 Compass Tracking	2-5
3	ANTENNA CONCEPTS AND PERFORMANCE	3-1
	3.1 Introduction	3-1
	3.2 Electronic Steering with Phase Shifters	3-1
	3.3 Electronic Switching with a Switching Power Divider/Combiner	3-5
	3.4 Mechanical Rotation Under Electronic Control	3-9
	3.4.1 Mechanically Steered Conformal Antenna	3-9
	3.4.2 Mechanically Steered Helix	3-11
	3.4.3 Mechanically Steered Tilted Array	3-11
	3.5 Conclusion	3-16
4	MECHANICAL DESIGN	4-1
	4.1 Summary	4-1
	4.1.1 Low Profile Rotating Disc Array	4-1
	4.1.2 Tilted Array	4-6
	4.2 Design Goals, Constraints and Assumptions	4-6
	4.2.1 Design Goals	4-6
	4.2.2 Design Constraints	4-7
	4.2.3 Assumptions	4-7
	4.3 Concept Development	4-8
	4.3.1 Low Profile Rotating Disc	4-8
	4.3.2 Rotating Dome with Angled Planar Array	4-11

TABLE OF CONTENTS

Section	Title	Page
5	ELECTRONICS DESIGN	5-1
	5.1 Phase Shifter Concept	5-1
	5.2 Switching Power Divider Concept	5-5
	5.3 Stepper Motor Concept	5-7
	5.4 Conclusions	5-7
6	ANTENNA OPERATION IN MULTIPLE SATELLITE SYSTEM	6-1
	6.1 Introduction	6-1
	6.2 Isolation in a Two Satellite System	6-1
	6.3 Isolation in a Three Satellite System	6-10
	6.4 Conclusion	6-10
7	COST ESTIMATES	7-1
8	RECOMMENDATIONS	8-1

Figure	Title	Page
2-1	LMV Antennas on Various Vehicles	2-2
2-2	Steering and Control Subsystem Using AGC Signal	2-4
2-3	Monopulse Tracking Subsystem	2-6
3-1	Electronically Steered Conformal Phased Array	3-2
3-2	Block Diagram of Conformal Phased Array Antenna	3-3
3-3	Electronically Switched Truncated Cone Array	3-6
3-4	Electronically Switched Cylindrical Array	3-7
3-5	Electronically Switched Cylindrical Array	3-8
3-6	Mechanically Steered Conformal Array	3-10
3-7	Mechanically Steered Helix	3-12
3-8	Mechanically Steered Helix	3-13
3-9	Mechanically Steered Tilted Array	3-14
3-10	Mechanically Steered Tilted Array	3-15
4-1	Low Profile Rotating Disc	4-4
4-2	Mechanically Rotated Tilted Antenna	4-5
5-1	Phased Array Beam Steering Controller Block Diagram	5-2
5-2	Pin Diode Driver Circuit	5-4
5-3	Beam Steering Controller Block Diagram	5-6
5-4	Stepper Motor Beam Steering Controller Block Diagram	5-8
6-1	Phased Array Without Taper	6-4
6-2	Phased Array With Taper	6-5
6-3	1x4 Tilted Array Without Taper	6-6
6-4	1x4 Tilted Array with Taper	6-7
6-5	Two Satellite Isolation in Texas Showing 13dB Worst Case	
6-6	Phased Array Without Taper(60)	6-11
7-1	Cost Estimates for 10,000 Units Produced in Three Years	7-4
7-2	Cost Estimates for 100 Units Produced in One Year	7-5

Table	Title	Page
1-1	LMV Antenna Specifications	1-2
3-1	Phased Array Loss Budget at 3 Elevation Angles	3-4
3-2	Summary of Antenna Concept Performance	3-17
4-1	Mechanical Drive Mechanism Trade-Offs	4-2 4-3
6-1	Isolation in Two Satellite System (80° and 113°)	6-3
6-2	Practical Worst Case Isolation in Three Satellite System (75°, 105°, and 135°)	6-12
6-3	Best and Worst Case Isolation Levels for Five Extreme Conus Locations in a Two Satellite System	6-14

Section 1
INTRODUCTION

The basic antenna requirements are summarized in Table 1-1. There are many restrictive factors that make the design of this antenna a more complex one. The gain requirements of 6 dBic, 9 dBic, or 12 dBic or more limits the available designs to a directive type of an antenna. In this case, a steering mechanism is required in order to achieve a full 360° azimuth coverage. The addition of a steering mechanism makes the antenna more complex and more expensive than the simpler omnidirectional one.

The other essential parameter in the design of the antenna is maintaining a full elevation coverage of 10° to 60° with gains reaching 12 dBic or higher. The limiting factors in achieving this objective are the limited area available for radiating the electromagnetic (EM) energy which is in this case less than or equal to 38 inches, and the general preference for low height antennas.

A low profile antenna with antenna height less than 3 inches has only the car surface to radiate the EM energy in a slanted direction which reduces the effective radiating aperture. Thus, the gain which is directly proportional to the effective radiating area, is reduced also.

A non-conformal type of an antenna can give a full elevation coverage with a single and multiple elevation beam; however, the height of the antenna is over 8 inches. In many cases, the multipath pattern roll-off doesn't meet the requirements shown in Table 1-1.

Another critical parameter in the design of this antenna is the axial ratio. A four dB or less axial ratio can generally be achieved for a tilted nonconformal type of a design; however, it degrades rapidly for conformal types of antennas. The main cause for axial ratio degradation in conformal antennas is the conducting ground plane which has the effect of suppressing one component of the electric field near the horizon.

TABLE 1-1

LMV ANTENNA SPECIFICATIONS

FREQUENCY :	
TRANSMIT	821-825 MHz
RECEIVE	866-870 MHz
GAIN :	6 dBIC MINIMUM 9 dBIC OR WHERE THERE IS A SUDDEN CHANGE IN COST 12 dBIC MINIMUM
COVERAGE :	
AZIMUTH	360°
ELEVATION	10° TO 60° WITH ONE ANTENNA OR WITH TWO ANTENNAS THAT HAVE 10° TO 20° AND 20° TO 60° COVERAGE
BEAMWIDTH :	NOT SPECIFIED WITH THE CONDITION THAT IT DOES NOT CREATE PROBLEMS TO ACQUISITION AND TRACKING
POLARIZATION :	CIRCULAR
AXIAL RATIO :	≤ 4 dB
MULTIPATH :	-7 dB FROM MINIMUM GAIN AT ELEVATION ANGLE OF 5° -10 dB FROM MINIMUM GAIN AT ELEVATION ANGLE OF 0° OR LOWER
POWER HANDLING:	100 WATT PEAK 5 WATT AVERAGE
SIZE :	
DIAMETER	≤ 38 INCHES
HEIGHT	SHOULD BE KEPT LOW SO THAT IT DOES NOT IMPEDE IN THE NORMAL OPERATION OF THE VEHICLE
WEIGHT :	NOT SPECIFIED WITH THE CONDITION THAT IT DOES NOT OVER-BURDEN THE VEHICLE

Presently, weight is not a critical parameter in the design of the antenna. However, it is preferable to have a light weight design. A heavier type of antenna requires a large motor to steer it, which usually adds extra cost to the price of the production units.

In summary, we will provide a cost trade-off study into the various Land Mobile Vehicle (LMV) antenna concepts. The trade-off study involves achieving low cost designs as well as meeting most of the antenna specifications described in Table 1-1.

Section 2
ANTENNA SYSTEM

2.1 Antenna Categories

Our baseline design reduces to three major antenna categories. These antenna categories are based on the types of steering mechanism. The following is a list of these categories:

- the electronically steered arrays with phase shifters
- the electronically switched arrays with switching power dividers
- the mechanically steered antennas driven by motors

Figure 2-1 shows five antenna concepts, one concept in the electronically steered category and two concepts in each of the electronically switched and the mechanically steered categories, mounted on various land mobile vehicles. Each antenna is shown scaled to its own vehicle.

Generally, the mechanically steered antennas are simpler in design and have lower cost parts than the electronically steered ones and thus, are less expensive. The detail layouts and performance of these antennas are discussed in Sections 3 and 4.

2.2 Radiating Elements

The types of radiating elements can vary from design to design; however, the most suitable elements for this application with circular polarization are:

- Microstrip antennas
- Crossed-slot antennas
- Crossed-dipole antennas
- Helix antennas
- Spiral antennas
- Horn antennas

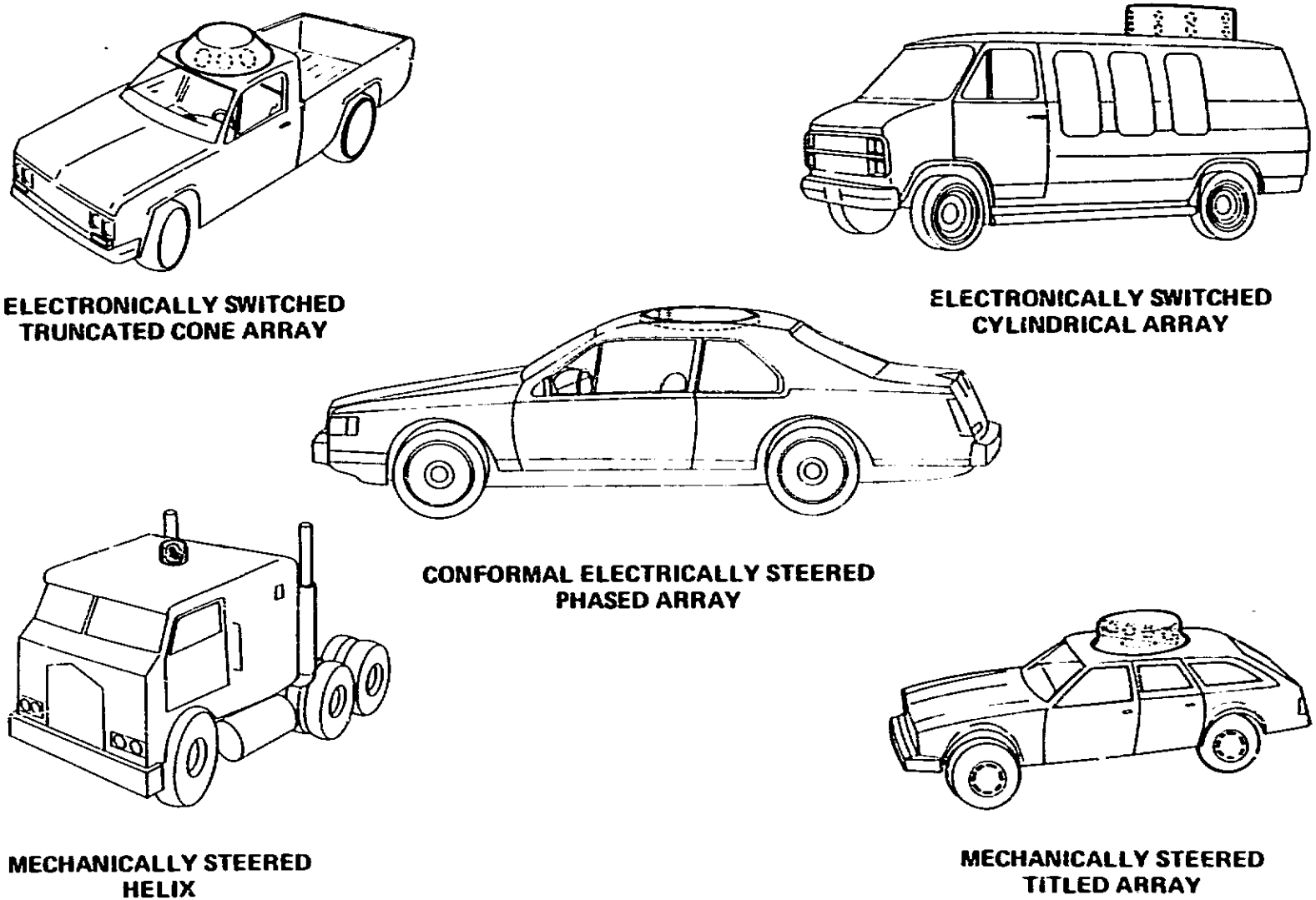

A/N 4155

Figure 2-1. LMV Antennas on Various Vehicles

The selection of these elements is based on the types of antenna designs and on achieving the required bandwidth. For example, in cases where conformality and small thickness is of importance, microstrip and crossed slot antennas are the most suitable radiating elements. In others where conformality is not essential and simplicity in design is required, a helix antenna may be the likely element to use. The selection of these elements is based on the type of radiation pattern coverage, gain, axial ratio, and on the type of low angle pattern roll-off.

2.3 Control and Steering Mechanism

As we have previously discussed, these types of antennas require some form of a steering mechanism as well as control for acquisition and tracking of the satellite. The most suitable tracking methods are:

- AGC signal tracking
- Monopulse tracking
- Compass

We have emphasized in this report the AGC signal tracking method for its simplicity and low cost. However, a monopulse tracking system is a more accurate system to use and it is a more expensive one. The compass method does not require any signal tracking from the satellite. It is generally less accurate than either the AGC or monopulse tracking methods. In the following we will discuss briefly the basic operations of each of the beam-pointing methods:

2.3.1 The AGC Method

Figure 2-2 shows a block diagram of the AGC system. The received AGC signal is sampled at a given rate which is determined by the frequency of ripple associated with the multipath fading. The frequency of ripples is generally varying with the speed of the vehicles; however, it is expected to be below 200 Hz. The sampled AGC signal can then be passed through a low frequency digital filter for smoothing out the signal from the low frequency ripples. A programmed microprocessor is then used to track the strongest received signal within a given tolerance level. It determines the direction the antenna should rotate and directs the stepper motor (in the mechanically steered antenna) or the electronic beam-steering driver (in both the electronic phased array or the electronic switched

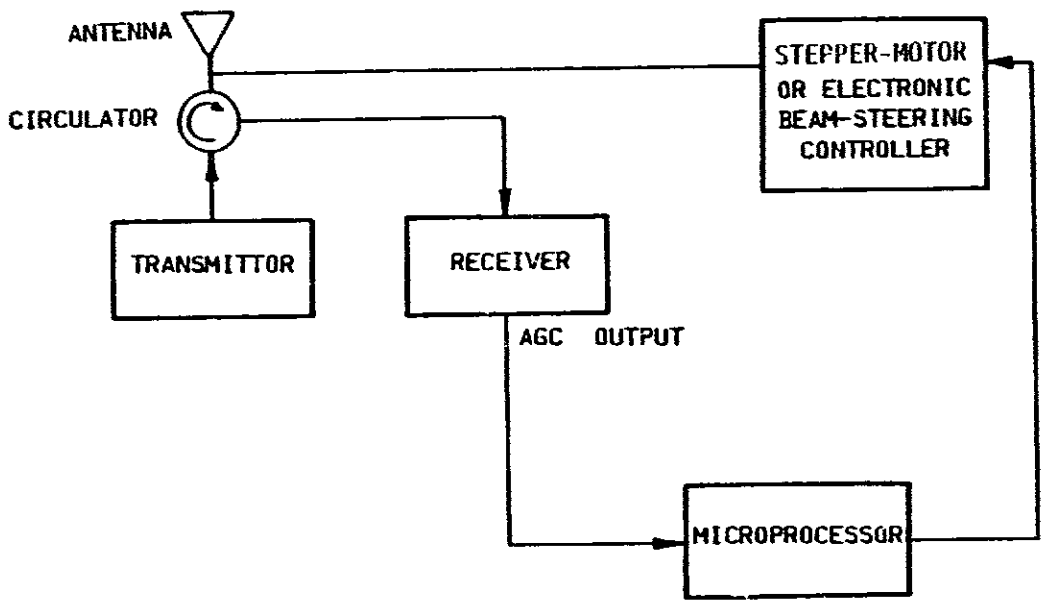

Figure 2-2. Steering and Control Subsystem Using AGC Signal

antennas) to steer to the proper direction. The accuracy of signal tracking depends on the tolerance level selected within the main beam. Variations of ± 1 dB can be considered acceptable.

The disadvantages of the AGC method are: (one) the loss in gain due to the inaccuracies in tracking the main beam, and (two) the degradation in satellite isolations in multi-satellite operation which is due to the inaccuracies of tracking the main beam. The main advantage of using the AGC system is its simplicity in implementation which can be translated into low cost antenna systems.

2.3.2 The Monopulse Method

A simplified block diagram of the monopulse system is shown in Figure 2-3. This system consists in its simplest form of two antenna ports output. One port is the usual port that generates the main beam. It is called the sum port and the pattern of this beam is called the sum pattern. The second port is called the difference port and it is generated from having 180° phase reversal between the two halves of the antenna. The difference pattern has a null with respect to the peak of the main beam of the sum pattern. The receiving system is continuously monitoring the difference between the sum and the difference pattern to determine the level of the signal received. The strongest signal received is when the peak of the main beam is directly pointing toward the satellite. Any other position would give a lower level of signal reception.

The system is highly accurate in locking on a satellite signal within the LMV antenna main beam. The system, however, requires an additional port from the antenna, that is the difference port, as well as a more complex receiver. This amounts to an additional cost to the antenna system. In some antenna cases, it may not be so simple to implement both sum and difference patterns.

2.3.3 Compass Tracking

It is one of the simplest beam-pointing methods to implement with no signal required from the satellite. It is an open loop pointing method. In its basic form, a magnetic compass may be used to identify the direction of magnetic north.

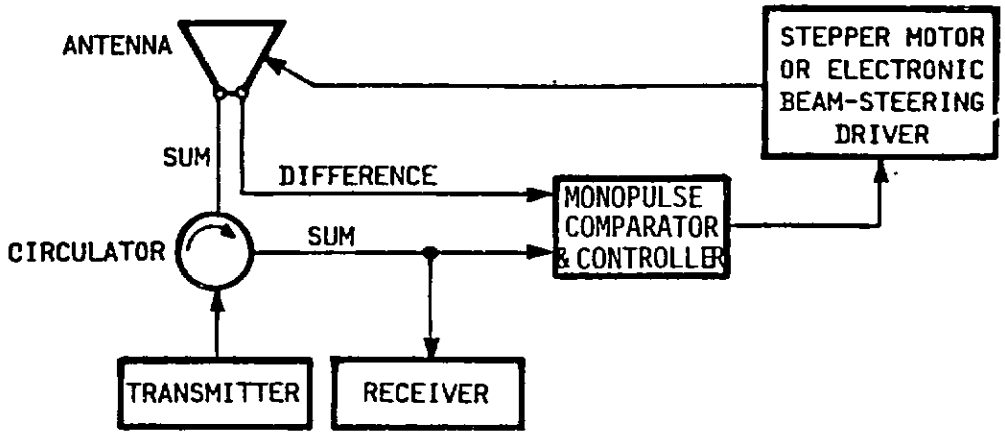

Figure 2-3. Monopulse Tracking Subsystem A/N 4155

Given the initial geographical location of the vehicle, a microprocessor can calculate the location of the satellite and then instruct the antenna to point to the appropriate satellite position using the signal information on magnetic north from compass. The method is highly inaccurate for use in Alaska and regions where there are high magnetic deposits. It has the problem of needle deflection due to other steel-based vehicles such as other cars, trucks, or trains passing by. Also, this method is limited to one-dimensional azimuth scanning.

Another method is to use a gyro-based sensor system to properly point the direction of the vehicle antenna beam to the satellite. This system is presently a very expensive one.

Section 3
ANTENNA CONCEPTS AND PERFORMANCE

3.1 Introduction

All the antenna concepts for the LMV antenna system require the main beam of the antenna to be steered. The three methods of steering in order of decreasing complexity and cost are electronic steering with phase shifters, electronic switching with a switching power divider/combiner, and mechanical rotation under electronic control. Many of the trade-offs in the various LMV antenna concepts are controlled to a greater degree by the steering mechanism than by the actual details of the antenna design. Thus, the concepts have been classified as to the type of steering used to control the position of the main lobe in the radiation pattern.

3.2 Electronic Steering with Phase Shifters

The one antenna in this category is the electronically steered phased array antenna. Many variations of this antenna can be designed depending on the type of element and array lattice used; however, an optimal design, in the sense that maximum gain is achieved at minimum cost, will require that these variables be fixed. The electronically steered phased array is shown in Figure 3-1. This configuration has 19 stripline fed crossed slots with integral polarization hybrids. Phase shifters are located beneath the stripline element layer on a microstrip board which contains the RF feed network and DC control circuitry for the phase shifters. A block diagram of the phased array is shown in Figure 3-2. The stripline-fed crossed slots were chosen based on their superior low angle radiation characteristics which minimize gain reduction at low elevation angles. The 19 element triangular lattice was chosen to minimize the number of elements within the given aperture and at the same time avoid formation of grating lobes which would reduce the array gain.

The low profile conformal physical characteristics of the electronically steered phased array is the most important and obvious advantage. However, many factors contribute to poor operation of this antenna at low elevation scan angles. The gain of the array is degraded by such characteristics as scan loss which goes as the $\cos(\theta)$ - θ measured from zenith; increased polariza-

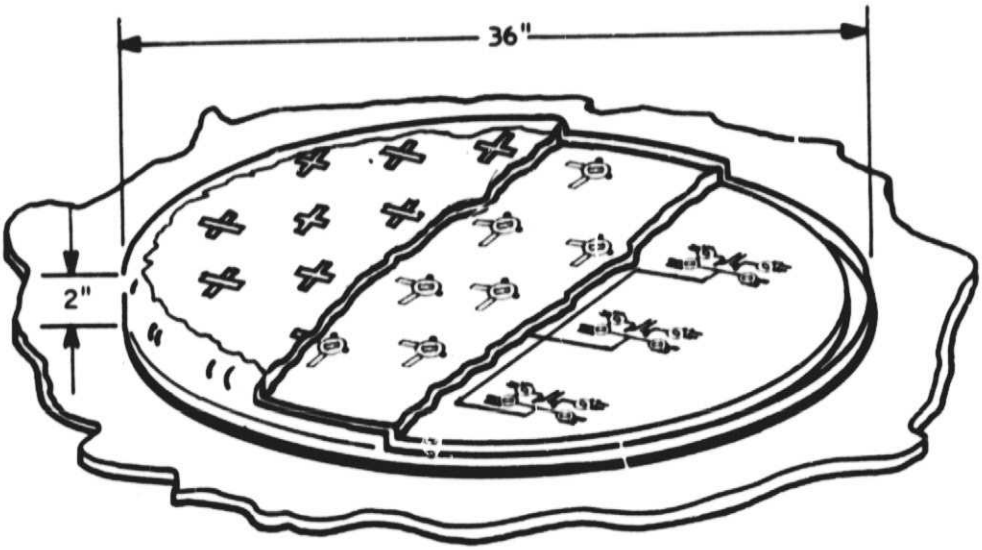

Figure 3-1. Electronically Steered Conformal Phased Array

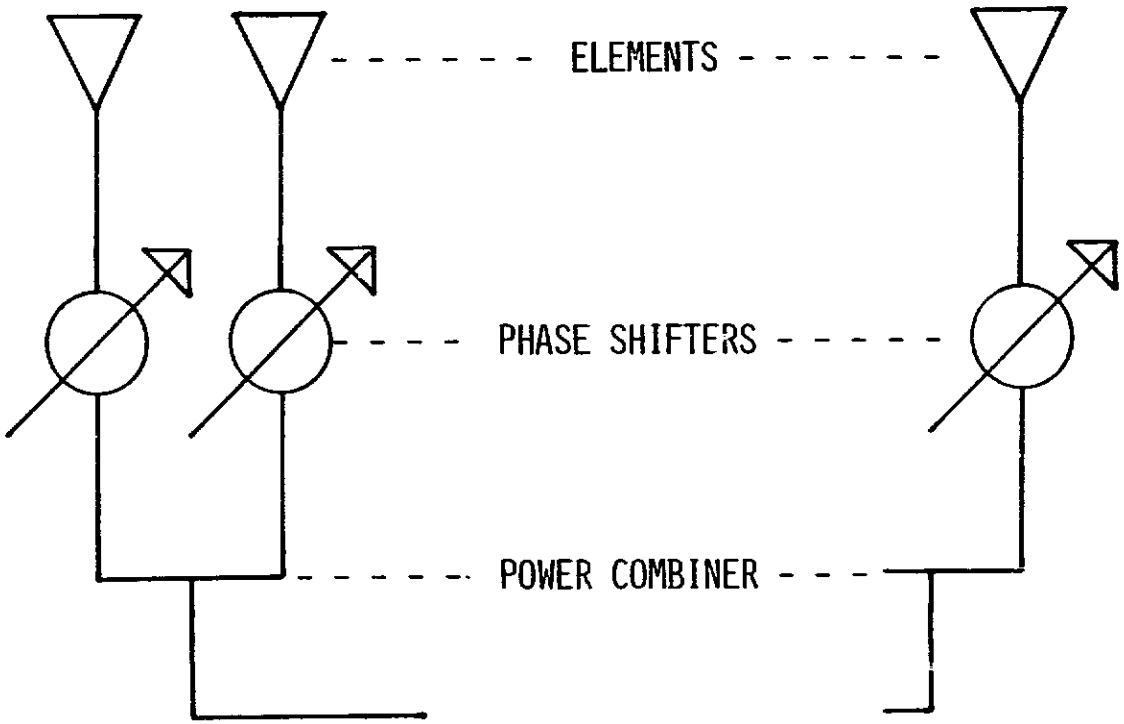

FIGURE 3-2. BLOCK DIAGRAM OF CONFORMAL PHASED ARRAY ANTENNA

Table 3-1. Phased Array Loss Budget at 3 Elevation Angles

	Desired Elevation Angle Above Horizon		
	10°	20°	60°
Axial Ratio	10 dB	9 dB	2 dB
Beam Peak Elevation Angle (Above Horizon)	30°	30°	60°
Directivity	17.8 dB	17.8 dB	17.8 dB
Scan Loss	- 3.0 dB	- 3.0 dB	- 0.6 dB
Polarization Loss	- 1.0 dB	- 0.9 dB	- 0.1 dB
Pattern Rolloff*	- 6.0 dB	- 2.0 dB	- 0.0 dB
Phase Shifter	- 0.9 dB	- 0.9 dB	- 0.9 dB
Power Combiner	- 0.9 dB	- 0.9 dB	- 0.9 dB
Gain	6.0 dB	10.1 dB	15.3 dB

* From the actual beam peak elevation angle to the desired elevation angle.

tion loss due to poor axial ratio; and pattern gain losses due to inability to actively scan to such low elevation angles. To illustrate this performance degradation, Table 3-1 shows the loss budget for the electronically steered phased array at three elevation angles which correspond to southern CONUS, northern CONUS, and Alaska. The very rapid gain decrease is evident. The other obvious disadvantage of the conformal phased array is the high cost per dB of gain compared to the other concepts; the actual cost details will be given later.

In applications where the conformal property of the electronically steered phased array is a major concern, it offers a solution with a premium price. However, even at the higher cost, performance at low elevation angles will suffer when compared to higher profile solutions at lower overall cost.

3.3 Electronic Switching with a Switching Power Divider Combiner

Three antennas are described in this section and all operate under the same basic mechanism - the difference being only in the relative height of the structure which is linearly proportional to the gain of the unit. The three heights in order of decreasing gain are 30, 15, and 7.5 inches corresponding to 12, 9, and 6 dB of antenna system gain at the output of the RF connector. Many slight variations of these antennas exist depending on the type of element used and both the total number of elements in the ring and how many are turned on. The configurations shown in Figures 3-3 through 3-5 have 12 microstrip elements of which 2 are turned on for each beam that is produced. The two higher gain versions also require elevation steering through either user alterable phase shifters (line lengths) or preselected latitude dependent installation.

The trade-offs in the electronically switched antenna concepts are somewhat different than those given for the electronically steered phased array. There is very little dependance on the elevation steering angle with respect to gain. The most pronounced gain reduction in the two larger versions actually occurs at high elevation angles, whereas in the electronically steered phased array, the losses were greatest at low elevation angles. The cost of these units is lower than the phased array and the physical size is considerably greater. However,

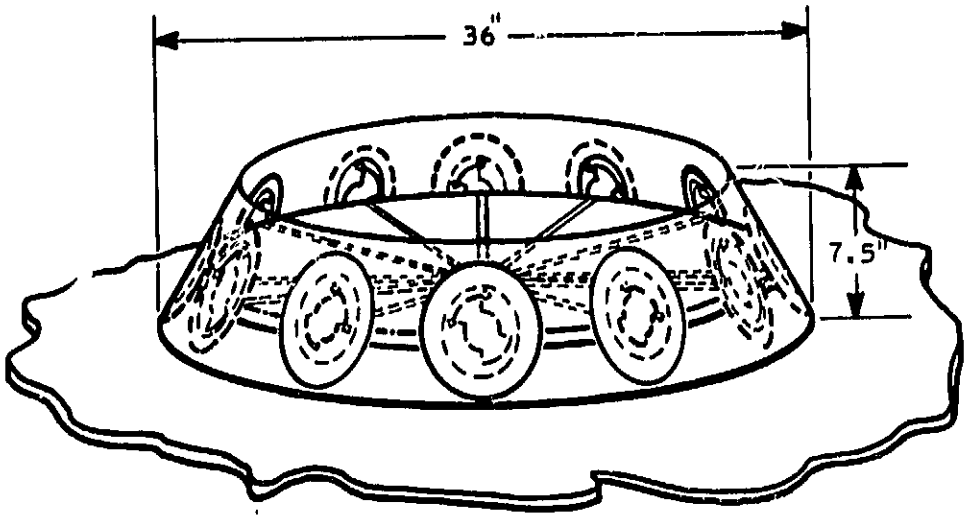

Figure 3-3. Electronically Switched Truncated Cone Array

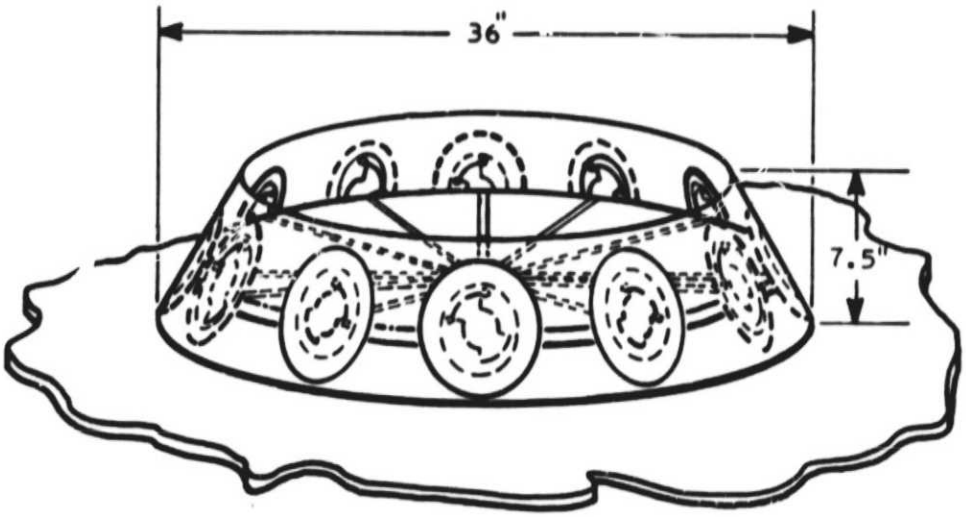

Figure 3-3. Electronically Switched Truncated Cone Array

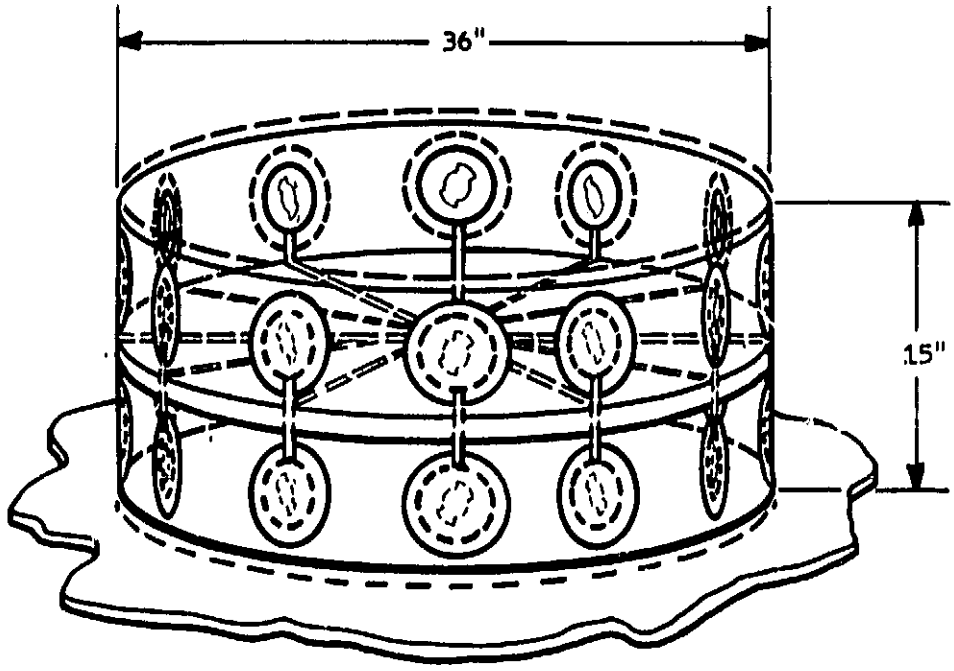

Figure 3-4. Electronically Switched Cylindrical Array

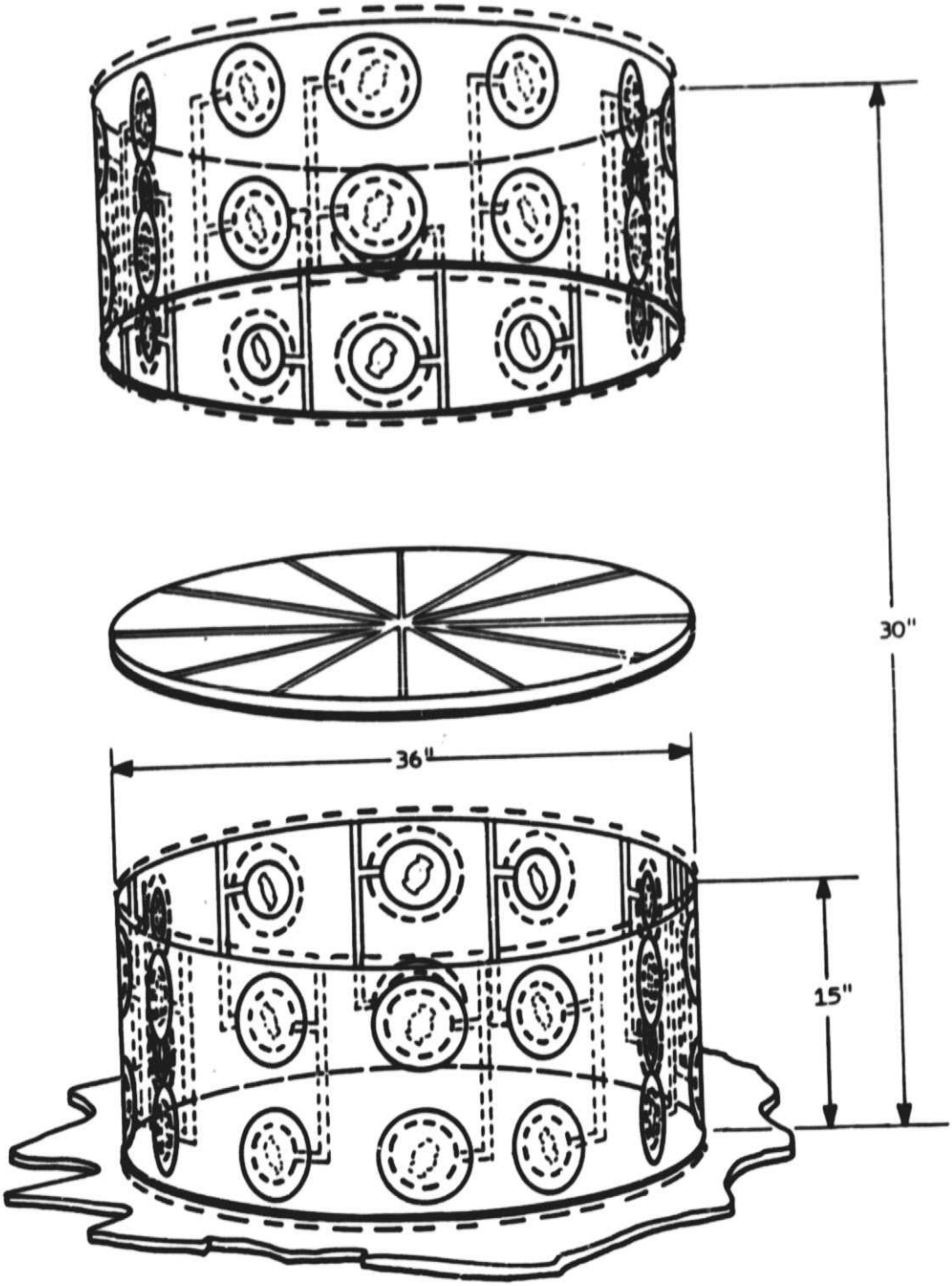

Figure 3-5. Electronically Switched Cylindrical Array

when compared to the mechanically steered versions which follow, the only major advantage would be the somewhat higher reliability of electronic versus mechanical steering. Whether the increased reliability is worth the higher cost is a further area to be considered.

3.4 Mechanical Rotation Under Electronic Control

There are three basic variations of mechanically steered antennas in this category. Two of the three basic types can be built in smaller sizes with corresponding reduction in gain; the third type, the mechanically steered conformal array, is already near the lower limit of gain values considered in this study and therefore can not reasonably be reduced any further in size.

3.4.1 Mechanically Steered Conformal Antenna

This antenna concept is shown in Figure 3-6. Again, there are variations in the design depending on element and array lattice choice. In the configuration shown stripline-fed crossed slots with integral polarization hybrids and power combiner were chosen. The crossed slots have good low elevation angle radiation characteristics and the stripline design allows the polarization hybrids and power combiner to be fabricated within the element layer.

The major disadvantage of the mechanically steered conformal array is the gain degradation at low scan angles as in the electrically steered conformal phased array. In addition, if a single design is used for CONUS coverage, the mechanically steered version requires the beam to be shaped for the desired elevation coverage region, and therefore has less gain than the electronically steered phased array. For preselected elevation coverage regions the mechanically steered version would have higher gain than the phased array. It would then be a worthwhile consideration, especially for southern regions of the CONUS where very high gains could be achieved in a low profile package at lower cost than the phased array.

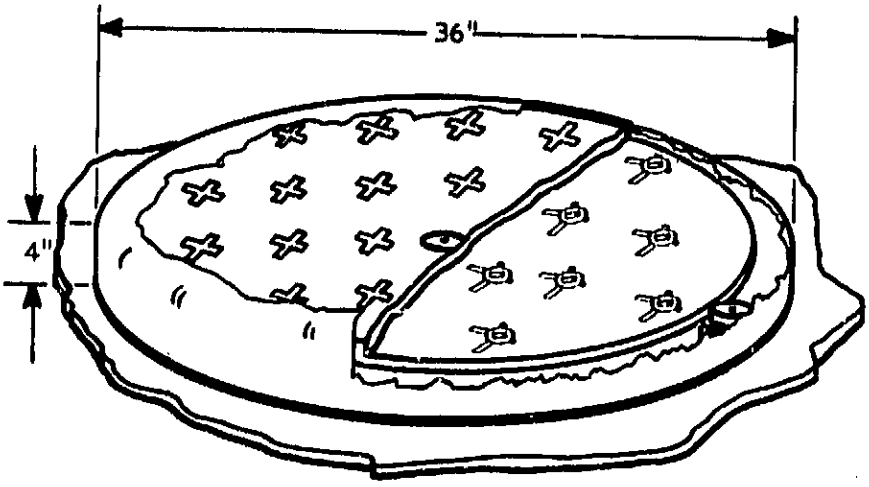

Figure 3-6. Mechanically Steered Conformal Array

3.4.2 Mechanically Steered Helix

The two versions of the mechanically steered helix antenna are shown in Figures 3-7 and 3-8. The 9 dB version is only half the height and half the diameter of the 12 dB version. The operation is very simple and straightforward. The helix is set for the proper elevation angle depending on the latitude of the user, and the azimuth direction is controlled through the mechanical rotation of the mounting hardware.

The helix antennas are reasonably low cost and can achieve the higher gains in the 6-12 dBic range under study. However, the vertical height is much greater for the mechanically steered helices than for equivalent gain antennas in the mechanically steered tilted varsions described below.

3.4.3 Mechanically Steered Tilted Array

The mechanically steered tilted array is shown in Figures 3-9 and 3-10. The 9 dB version is half the diameter of the 12 dB version. The tilted arrays with proper element choice have nearly optimal elevation coverage and achieve higher gains by increasing the aperture in the azimuth direction. The tilted panels contain the elements, polarization hybrid and power combiner. Several versions could be constructed by utilizing different types of elements; however, the units shown use microstrip patch antenna elements on a paper honeycomb substrate for low cost and weight with near optimal elevation pattern coverage.

The mechanically steered tilted arrays are an excellent choice for meeting the required specifications. The elevation coverage is nearly optimal for CONUS operation; the gain is achieved by effective use of the aperture in the azimuth direction; the axial ratio is excellent; and the feed is simple and therefore low loss. In addition, the cost of the mechanically steered tilted array is among the lowest of all concepts studied. A major benefit of this type of antenna which will be discussed later is the very desirable beam shape for achieving isolation between desired and undesired satellites in a two satellite system. The only real disadvantage of the mechanically steered tilted array antenna is the 7.5" vertical dimension and the resulting non-conformal physical characteristics.

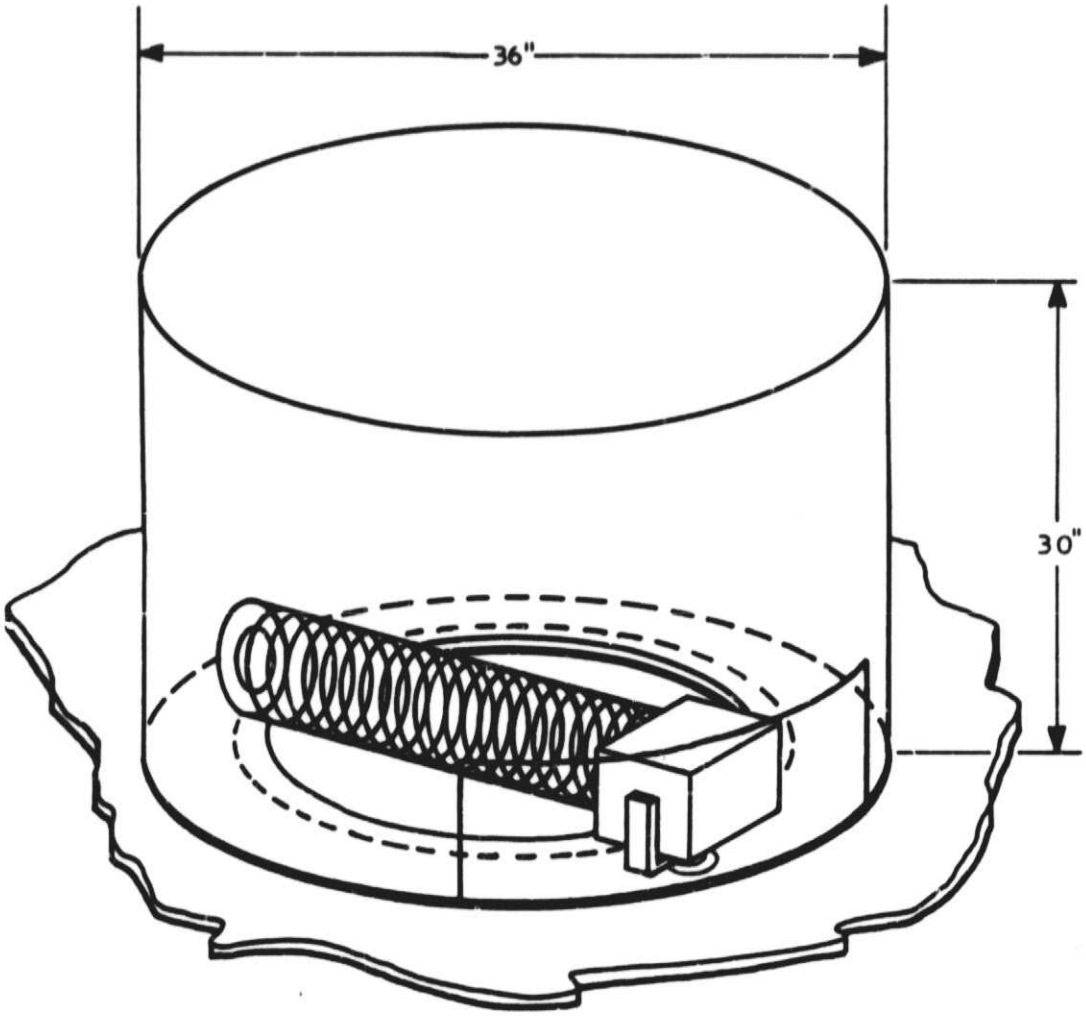

Figure 3-7. Mechanically Steered Helix

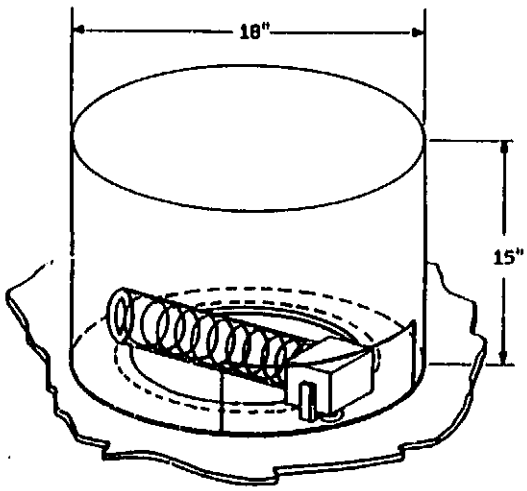

Figure 3-8. Mechanically Steered Helix

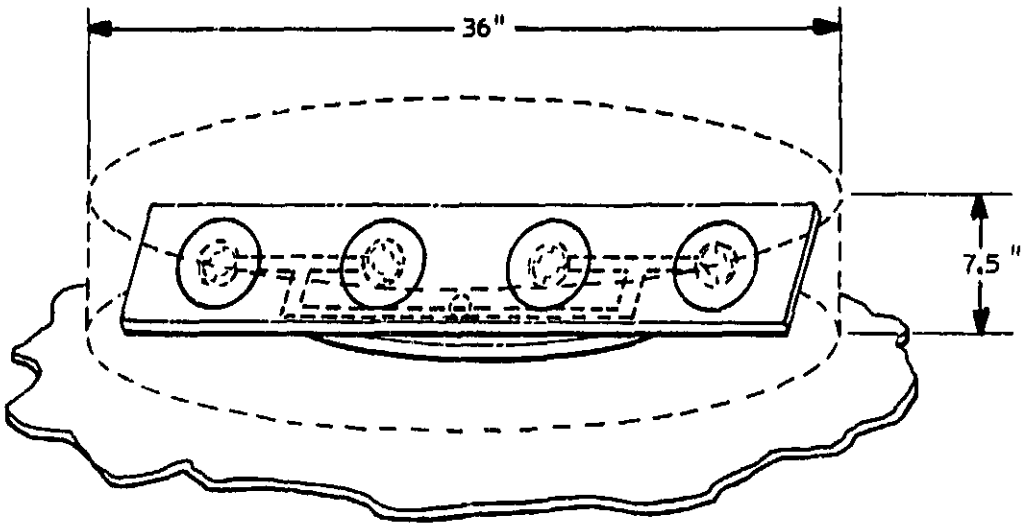

Figure 3-9. Mechanically Steered Tilted Array

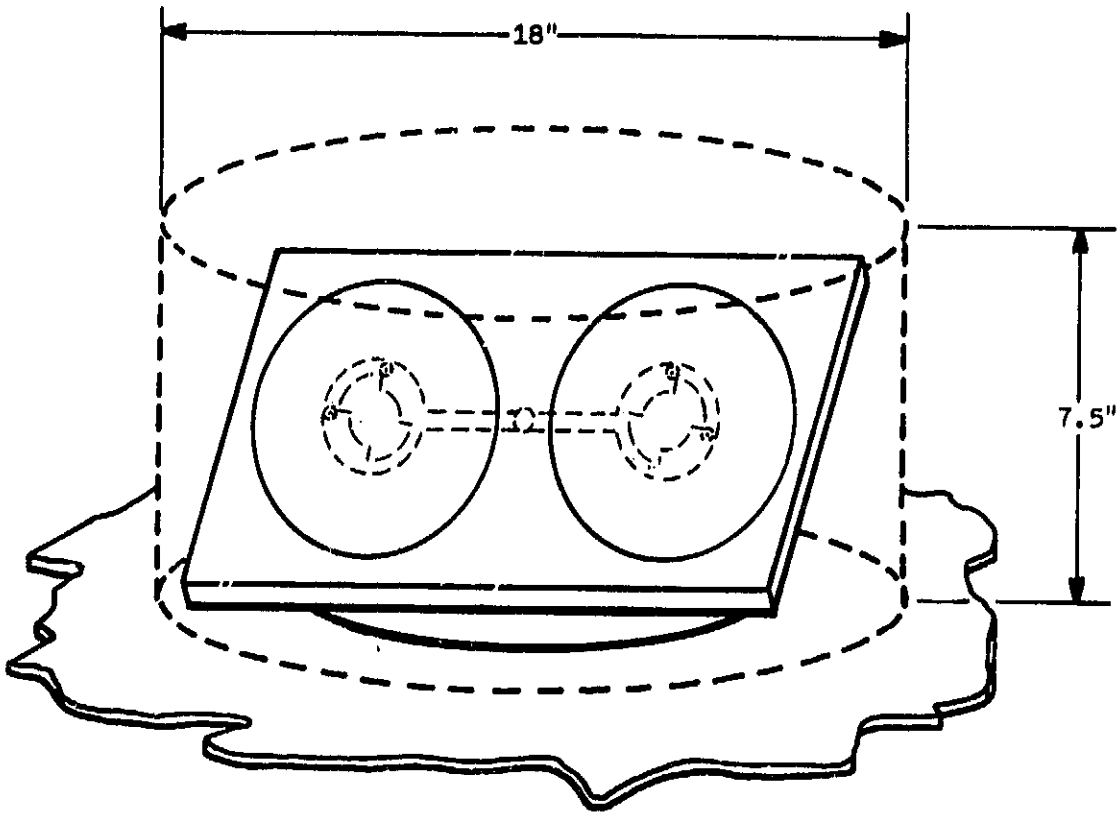

Figure 3-10. Mechanically Steered Tilted Array

3.5 Conclusion

All the concepts are summarized in Table 3-2. The predicted performance of each antenna type is listed for comparison purposes. All gains are listed as worst case values; the actual gain at some pointing angles may be much greater than the stated value.

	PHASED ARRAY FIGURE 3-1	1x4 TILTED FIGURE 3-9	1x2 TILTED FIGURE 3-10	4x12 SWITCHED FIGURE 3-5	2x12 SWITCHED FIGURE 3-4	1x12 SWITCHED FIGURE 3-3	CONFORMAL MECH. FIGURE 3-6	30" HELIX FIGURE 3-7	15" HELIX FIGURE 3-8
TRANSMIT FREQUENCY 821-825 MHz	YES	YES	YES	YES	YES	YES	YES	YES	YES
RECEIVE FREQUENCY 866-870 MHz	YES	YES	YES	YES	YES	YES	YES	YES	YES
CONUS GAIN (DB) (MINIMUM)	10	12	9	12	9	6	9	12	9
ALASKA + CONUS GAIN (DB) (MINIMUM	6	12	9	12	9	6	6	12	9
# ELEV. POSITIONS - CONUS	2	1	1	3	2	1	1	2	1
# ELEV. POSITIONS - CONUS + ALASKA	3	2	2	4	3	2	1	3	2
VSWR ($\leq$ 2:1)	YES	YES	YES	YES	YES	YES	YES	YES	YES
HPBW - AZIMUTH (DEGREES)	26	18	36	38	38	38	26	36	72
HPBW - ELEVATION (DEGREES)	26	65	65	18	36	65	50	36	72
AXIAL RATIO - CONUS (DB)	9	4	4	4	4	4	9	4	4
AXIAL RATIO - ALASKA (DB)	10	4	4	4	4	4	10	4	4
PATTERN ROLL OFF - 5^0 (DB)	3	2	2	4	3	2	3	3	2
PATTERN ROLL OFF - 0^0 (DB)	6	4	4	8	6	4	6	6	4
SIZE - BASE DIAMETER (INCHES)	36	36	18	36	36	36	36	36	18
SIZE - HEIGHT (INCHES)	2	7.5	7.5	30	15	7.5	4	30	15
PEAK POWER (100W)	YES	YES	YES	YES	YES	YES	YES	YES	YES
AVERAGE POWER (5W)	YES	YES	YES	YES	YES	YES	YES	YES	YES

TABLE 3-2. SUMMARY OF ANTENNA CONCEPT PERFORMANCE

Section 4
MECHANICAL DESIGN

4.1 SUMMARY

In order to achieve an accurate cost estimate for the various LMV mechanical antenna concepts, some detailed design trade-off is necessary. This section is written so as to provide the necessary details for the antenna mechanical construction. The design goals are outlined, some basic assumptions are made and design constraints are identified.

Evaluation of the key mechanical elements, as applicable to this particular requirement, was also conducted concurrent with the preliminary design effort. The trade-off results are summarized in Table 4-1.

For better assessment into the cost of the mechanically steerable antenna, two antenna design concepts were investigated which resulted in two basic configurations:

1) A low profile rotating disc array parallel to the ground plane as shown in Figure 4-1.

2) A rotating dome with a rectangular planar array mounted at an angle as shown in Figure 4-2.

4.1.1 Low Profile Rotating Disc Array

Two design concepts were investigated. The initial design was a flat disc antenna array of 38-inch diameter driven by a stepper motor through a friction drive ring under the antenna array. The assembly was enclosed within a fiberglass housing with a self supporting plastic radome and resulted in a 6 inches high by 39.80 inches diameter assembly. Reference: Figures 1 and 2, Appendix A (Drawing No. 2423-001).

Table 4-1
MECHANCIAL DRIVE MECHANISM TRADE-OFFS

Possible Power Transmission	Evaluation	Rating
Roller Chain	Heavier than required for this application adds unnecessary mass to the moving parts. Requires tensioner to cut down lost motion. Some concern about vibration and horizontal position.	Poor
Cable Reinforced Plastic Ladder Belt	Proper strength range for this application. Limited availability of large diameter sprockets. Some concern about vibration and horizontal position.	Poor
Urethane Timing Belts	Proper strength range for this application in the medium range type with I.D. cogs. Limited availability of large diameter matching driven wheels. Require idler wheel to assure proper drive. Must be made as a one piece belt, limited in available sizes.	Second Choice
Spur Gears	Very positive drive. Limited in ratio to 10:1 max, requires larger torque motor. Concern about contamination and lubrication. Requires precise alignment.	Poor
Mitre Gears	Same as spur gears except even more limited in ratio 4:1 is common.	Poor
Direct Drive	Very large drive motor required due to no reduction in the drive train. Mounting in the center of rotation displaces the R.F. rotary joint and creates a difficult R.F. feed problem to solve.	Not Possible
Friction Drive	Requires side load proportional to frictional coupling. High drive train reduction possible, results in small drive motor. No special crowns or sprockets required. Not affected by contamination.	Best Choice

Table 4-1 (Cont'd)

MECHANICAL DRIVE MECHANISM TRADE-OFFS

Possible Rotary Member Mount	Evaluation	Rating
Loose Balls on Two Piece Race	Difficult to assemble. Susceptible to contamination failure. Allows for large diameter bearing. Inexpensive. Lube migration problems.	Poor
Tapered Bearing	Large diameter sizes required to clear to R.F. rotary joint (at the center of rotation) result in very large and unnecessarily strong bearings. Two piece construction makes them susceptible to contamination problems without oil baths or some sealing method.	Poor
Large Diameter Thin Cross Section Ball Bearings	Will carry the load. Very favorable packaging size. Relatively expensive specially in short runs, mainly an aircraft and instrument bearing.	Second Best
Conventional Conrad Ball Bearing with Seals & Shields	Available lubricated for the life of the unit. Heavy for the application but suitable. Not susceptible to contamination. Readily available at a relatively low price from various sources.	Best Choice

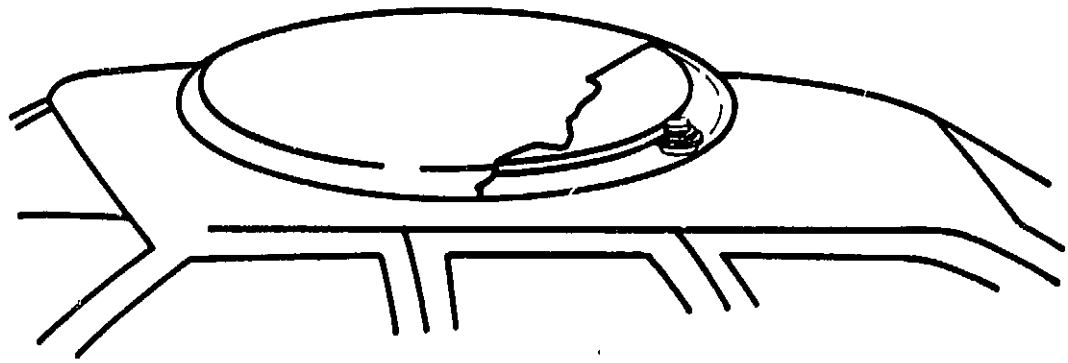

A/N 4155

Figure 4-1 Low Profile Rotating Disc

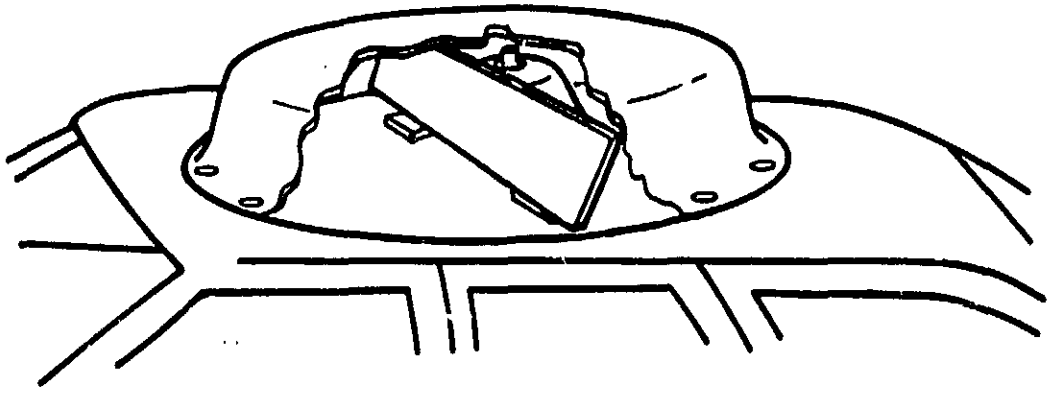

A/N 4155

Figure 4-2 Mechanically Rotated Tilted Antenna

Further design work aimed at reducing the overall height, to make a more contour conforming assembly, resulted in a similar flat disc antenna array driven by the same stepper motor except through a friction drive on the array O.D., this allowed for a more compact assembly. The bearing mount was also changed to reduce height and the radome made into a thin sheet of limited self support relying on the array for support in the event of great weight on the radome (heavy snow, etc.). The overall height of this arrangement was reduced to 4.3 inches with a 43.00 inches diameter.* Reference: Figures 5 and 6, Appendix A (Drawing No. 2423-003).

4.1.2 Tilted Array

In the tilted array, we have investigated two antenna concepts and then settled on using the second design option for its simplicity and lower cost. The initial design was based on a rotating plastic dome with a rectangular array mounted at an angle on cantilever arms equally spaced from the dome center of rotation; no external radome was used. Due to wind loading in a moving vehicle, the torque requirements were very high, which resulted in the need for a large stepper motor. Also, direct exposure to the environment required a full wraparound rotating dome and perhaps an environmental seal. Reference: Figures 3 and 4, Appendix A (Drawing No. 2423-002).

The design was developed further by the addition of a radome completely covering the rotating dome/antenna array. The addition of the radome reduced the torque requirements and allowed for a smaller drive motor, also allowed for a much simpler rotating dome which became just a support structure for the array. Reference: Figures 7 and 8, Appendix A (Drawing No. 2423-004).

4.2 DESIGN GOALS, CONSTRAINTS AND ASSUMPTIONS

4.2.1 Design Goals

The following is a list of the design goals that we felt are needed in order to pursue with an acceptable and cost effective design:

* Note the 43" diameter design is a preliminary one, a design with 36" to 38" diameter should be easy to achieve with minor modifications to the radome and and antenna disc.

- Low Profile : The antenna system shall be as conformal to the vehicle shape as possible.
- Lightweight : Should be lifted by one person. Should not cause undue stress on the vehicle roof due to vibration.
- Low Cost : Most complete favorably with other equipment of comparable performance.
- Mass Producible : A must for favorable price and delivery.
- Ease of Installation : Should not require vehicle modification to install. Should be transferable from one vehicle to another.
- Appearance : Should not detract from the host vehicle appearance; if possible, should blend with the color scheme.
- Antenna Size : Maximum mass of steered antenna array versus reasonable drive mechanism.

4.2.2 Design Constraints

The design constraints are as follows:

- Interface : Should mount onto any standard vehicle roof.
- Power : 12 Vdc within automotive regulation band.
- Environment : Ice and Snow
  Rain
  Car Wash Soap, Rinse and Brush
  Minor Vehicle Collisions.

4.2.3 Assumptions

The following is a list of assumptions that we have made in order to achieve acceptable design concepts.

- Vehicle 90° turn is the worst disturbance.
- 90° turn in two seconds.
- Mechanism must correct within 4° ($\pm 2^{\circ}$)

- Wind loads up to 30 MPH.
- Vehicle speed up to 55 MPH.
- Disc or array mass 12 pounds average.

4.3 CONCEPT DEVELOPMENT

4.3.1 Low Profile Rotating Disc

Preliminary analysis on 38-inch diameter flat discs weighing between 12 and 40 pounds showed that the heavier discs required very high torque drive motors or complex reduction gear in order to meet the stated performance goals. All follow-on work was based on 38-inch diameter disc, 1 inch thick with an average weight of 12 pounds.

Also the disc acceleration was assumed as equal to that required for a 90° vehicle turn in two seconds and disc deceleration as that required to stop (after a turn) within 4° or $\pm 2^{\circ}$ pointing. Both parameters were deemed adequate for drive control and antenna pointing.

Several possible power transmission methods were evaluated to obtain suitable disc/drive motor inertia ratios with available drive motors.

Different types of drive motors were also considered with availability and overall cost of motor plus electronic drive and motor plus power transmission given careful attention.

A stepper motor drive was chosen due to its favorable acceleration/deceleration characteristics, availability and simplicity of control.

A drive ratio of no less than 8:1 was also identified as that recommended for positive moving mass to drive inertial match.

Conceptual sketches using the most promising drive and suspension arrangements were made and a more detailed evaluation conducted.

MITRE GEARS

Most mitre gear drives are 4:1 ratio which results in a large motor. Other orthogonal gear drives are available for higher reduction ratios but all require lubrication which is not desirable for our requirements due to contamination susceptibility, maintenance and precision alignment.

Spure gears may be built with a higher reduction ratio than mitre gears but the same lubrication requirements and environmental susceptibility apply.

POLYURETHANE LINK/STEEL CABLE

The single chain type with two steel cables is not sufficiently strong. The dual type chain with the three steel cables and dual polyurethane links shows a reasonable safety factor.

This design requires a custom sprocket attached to the driven disc and idlers at both sides of the motor to maintain a positive tension on the chain.

Another requirement is a large diameter mounting ball bearing for disc mounting; a relatively expensive suspension since large diameter, this cross-section bearings are mainly used on aircraft components.

There is no limit on chain available size since it is powered as a belt strip and specified belts cut to size and assembled. There is a definite limit to how much (catenary) chain we can allow between driver and driven sprockets, since this could result in pointing erros.

URETHANE BELT

Lugs on I.D. type timing belts of standard configuration not sufficiently strong for 8:1 ratio transmission. The .20 pitch size, if cable or cord reinforced, shows sufficient strength for our requirements.

The driven member needs to be a custom piece so that we may incorporate the means to attach to the disc (antenna array); in production a zinc alloy die casting should do very well.

Again, we require idler rollers against the belt to ensure constant tension. Alignment is also important in this design, mainly to prolong belt life.

There is a limit to belt available diameter which limits our design to 8:1 reduction ratio. Other options are custom moulding of belts.

Due to alignment and belt tensioning check, etc., the mechanism must be pre-assembled prior to antenna disc installation, which is a more time consuming assembly sequence.

FRICTION DRIVE

By moving the motor out towards the periphery of the drive, we obtain a reduction ratio of almost 30:1 which allows for the use of relatively small stepper motors. The transmission is also greatly simplified since it consists of a small drive wheel at the motor and friction lip at the antenna array disc. The necessary load at the drive surface is supplied by a coil spring acting on the motor mounting frame which is suspended on a sleeve bearing at the antenna housing.

Even with a small stepper motor of current production, the inertia ratio between disc/drive is acceptable.

The antenna array mounting is now reduced to a simple plastic spider with inserts to receive the antenna holding bolts.

This configuration was considered the best choice and a more elaborate layout made: Reference Figures 1 and 2, Appendix A (drawing number 2423-001).

In an effort to further simplify the design and to better meet our goals of low profile and low cost, the design was reconfigured by moving the stepper motor out and changing the drive approach from friction against a lip to friction against the disc O.D.; this change allowed a reduction in height of almost the length of the motor.

The radome configuration was also improved by changing the rigid convoluted shape into a flat semi-rigid shape more easily formed of a wider choice of materials, resulting in lower cost. The new radome shape is not sufficiently rigid to support three inches of snow, but that heavy of a load will be transferred to the rotating disc via a PTFE support at the center of rotation. Reference: Figures 5 and 6, Appendix A (Drawing No. 2423-003).

The required stopping torque at the disc is T_{ST} = 1586.0 oz/in. The required stopping torque at the motor is then T_M = 530 oz/in. Stepper motor speed for 90^0 disc rotation in two seconds is 740 PPS (steps per second). The cost estimate for the flat arrays have been based on this final design concept.

4.3.2 ROTATING DOME WITH ANGLED PLANAR ARRAY

Since the drive requirements for both basic antenna configurations, flat disc array and angled rectangular array, are very similar; the drive selection rationale for the flat disc array (reference paragraph 1.3.1 above) applied directly to this configuration.

The first design concepts relating to this basic approach were based on a mitre gear drive and a domed rotor supporting a rectangular antenna array. This initial design had no radome. Due to our concurrent evaluation of drive mechanisms, the drive was changed into a friction drive and the motor selected was a stepper motor. The wind loading was estimated and the resulting torque at the motor with 10.8:1 drive ratio established. Even with a relatively mild prevailing wind assumed, the motor sizes obtained were large. Some rearrangement was done in an effort to change the overall profile and

to reduce the wind load effects the results are shown in Figures 3 and 4, Appendix A (Drawing No. 2423-002).

Figures 7 and 8, Appendix A (Drawing No. 2423-004) show a design concept based on a semi-rigid radome supported by rotor. Due to the high dome profile and the resulting frontal wind loading, the rotor supports the radome in both axial and radial direction.

By the addition of the radome, the rotor is now a simple supporting structure for the planar array. Also in the absence of wind load induced torque on the rotor, the motor size may be reduced so that standard production stepper motors are suitable for this application. The required stopping torque at the rotor is T_{ST} = 59.43 lb/in at rotor; the required stopping torque at the motor is T_M = 5.5 lb/in or T_M = 88.04 oz/in at the motor. Stepper motor speed for 90° disc rotation in two second is 270 PPS (steps per second).

As shown in the top left view of Figure 8, Appendix A (Drawing No. 2423-004) the 45° angle shown may be incrementally changed to approach 60° as required, by the addition of wedges between the array and the rotor.

The cost esimates for the rotating angled array have been based on this final design concept.

Section 5
ELECTRONICS DESIGN

It is essential that we provide some conceptual designs and detailed layouts of the steering controller electronics in order to make reasonably accurate pricing estimates. In this section, we show few electronics concepts and their basic beam-steering operation. The controller and drivers are used to operate:

- the phase shifters in the electronically steered phased arrays
- the switching power divider in the electronically switched beam
- the stepper motor in the mechanically steered antenna

Each of these concepts are explained in detail in the following sections.

5.1 PHASE SHIFTER CONCEPT

The beam steering controller provides all the necessary hardware to perform acquisition and tracking based upon maximizing the signal strength. As shown in Figure 5-1, the controller consists of two sections - a microprocessor and the PIN diode driver electronics. In order to minimize the number of components and cost, we propose to utilize a mask programmed single chip microprocessor as the heart of the controller. The device chosen is the Motorola MC6805R2 which includes adequate RAM (64 bytes), ROM (2K bytes), and I/O (24 programmable pins) for this application. This device also includes an eight bit analog to digital converter which will be utilized to digitize the AGC signal from the receiver. This will allow the beam steering controller to resolve the AGC to one part in 256.

The acquisition algorithm performed by the microprocessor will consist of rastering the scan volume, filtering the low frequency multipath ripples in the AGC signal and sampling the AGC at each beam position. During this process, the microprocessor will compare the signal strength and save the beam position of the strongest signal. After completing the raster, the microprocessor will steer the beam to the position of the strongest signal and will then start executing the tracking algorithm. (The execution time of this algorithm can be reduced by performing a coarse raster of the entire scan volume and then perform a fine raster of

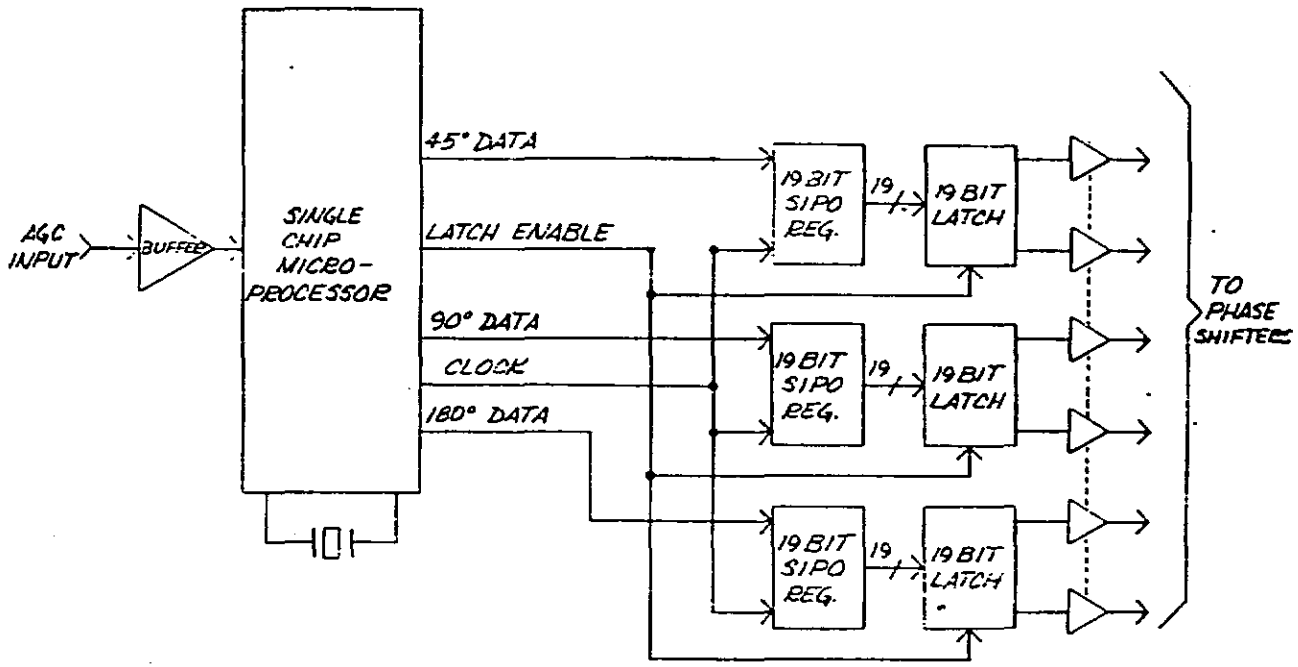

Figure 5-1 Phased Array Beam-Steering Controller Block Diagram

a reduced portion of the scan volume.)

The tracking algorithm performed by the microprocessor can be broken down into three consecutive tasks. First, the microprocessor monitors the AGC and determines when it drops below some predetermined threshold. This threshold will be a function of the number of degrees the beam can be steered off boresight and still safely maintain the link margin. Once this threshold is reached, the microprocessor will determine which direction to steer the beam by performing a simple four point raster in a manner similar to the acquisition algorithm. (A four point raster is required since the scan volume is two dimensional.) After completing the raster, the microprocessor will steer the beam to the position of the strongest AGC and returns to monitoring the AGC.

The microprocessor also performs the beam steering task as required by the previously discussed algorithms. This is accomplished partially in software and in the phase shifter interface. First, the microprocessor performs the necessary calculations to determine the required phase shift for each of the nineteen phase shifters. This task is simplified by only calculating the phase shift of the first phase shifter and determining the others by repetitively adding an appropriate delta phase shift to the previously calculated phase shift. The final task for the microprocessor is to perform the actual updating of the phase shifters and hence steer the beam. The interface between the controller and the phase shifters is a bit parallel, word serial interface consisting of three data lines, one clock line and one strobe. (See Figure 5-2). Part of this task was actually performed during the previously mentioned repetitive additions. Each time through this loop, the required phase shift for the next element was computed and the three most significant bits were loaded into a shift register. (Although the phase shifter on each element only uses three bits, the lower bits on the phase shift data are retained to maintain the accuracy during the summations.) All that is necessary at this point is to strobe the new phase shift data into the holding registers (latches). These holding registers are necessary to prevent erroneous beam positions during updating.

As shown in Figure 5-2, the holding registers are connected to the PIN diode drivers. This driver circuit consists of a single bipolar transistor used as

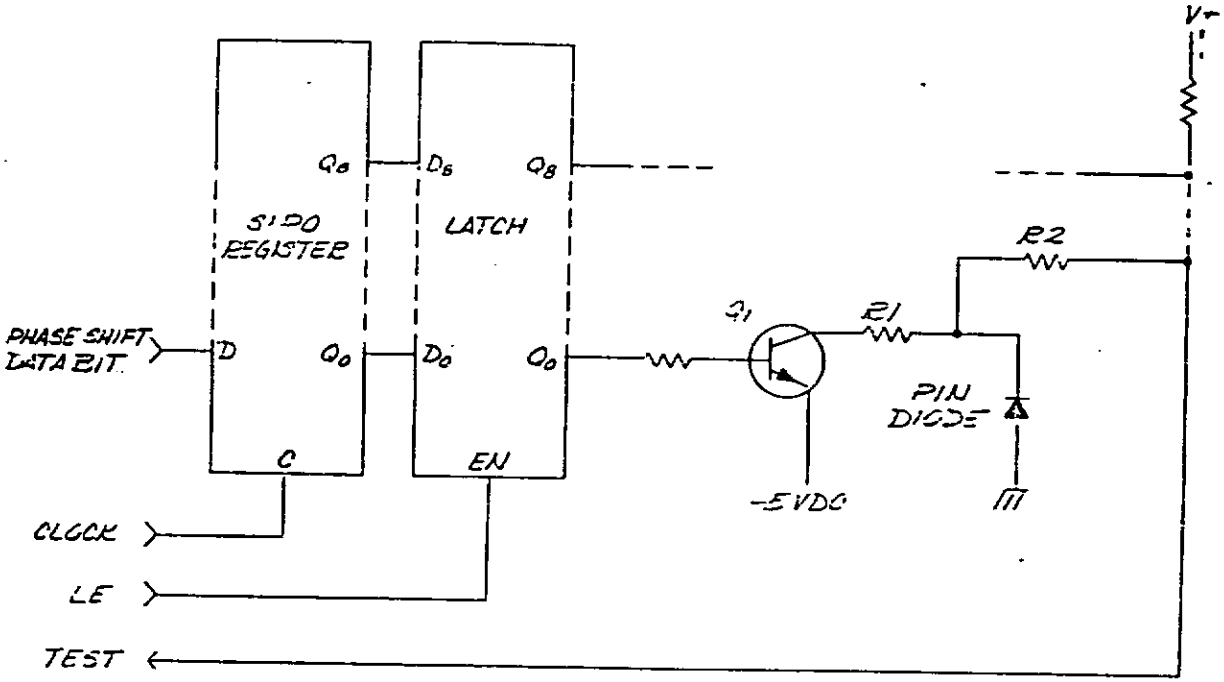

Figure 5-2 Pin Diode Driver Circuit

a saturating switch. Due to RF constraints, the anode of the PIN diode is tied to system ground; consequently an NPN transistor (Q1) is used to sink current to a negative supply. (In order to eliminate an additional discrete stage in the driver circuit for level shifting, the controller power supply will be shifted 5.0 volts negative with respect to system ground.) When Q1 is biased on, current flows through the PIN diode, R1, and Q1 to the negative supply with R1 limiting the current to a safe value - typically between 10 to 40 ma. When Q1 is biased off, the current in this loop is reduced to zero with R2 pulling the cathode to a positive voltage in order to guarantee that the PIN diode stays reverse biased.

5.2 SWITCHING POWER DIVIDER CONCEPT

The acquisition and tracking software algorithm is similar to the phase shifter control algorithm, in both cases the AGC signal is sampled to determine the beam position with the strongest signal. As shown in Figure 5-3, the controller consists of two sections - a microprocessor and a switching power divider.

The microprocessor performs the necessary calculations to determine which elements are necessary to form the new beam. The result of these calculations will be a twelve bit output word which will be used by the switching power divider (SPD) drive electronics to steer the beam. The final task for the microprocessor is to perform the actual updating of the SPD and hence steer the beam. The interface between the controller and the SPD's PIN diode drivers is a serial interface consisting of a data line and a clock line. The microprocessor will generate all the timing for these signals and serially clock the twelve bit output word into the SIPO register. All that is necessary at this point is to strobe the new output word into the holding registers (latches) and hence steer the beam. These holding registers are necessary to prevent erroneous beam positions during updating. Once this process is complete, the microprocessor returns to the first task of monitoring the AGC.

The PIN diode driver is shown in Figure 5-3. This driver circuit consists of a single bipolar transistor used as a saturating switch. Due to RF constraints, the anode of the PIN diode is tied to system ground; consequently, an NPN transistor (Q1) is used to sink current to a negative supply. (In order to eliminate an

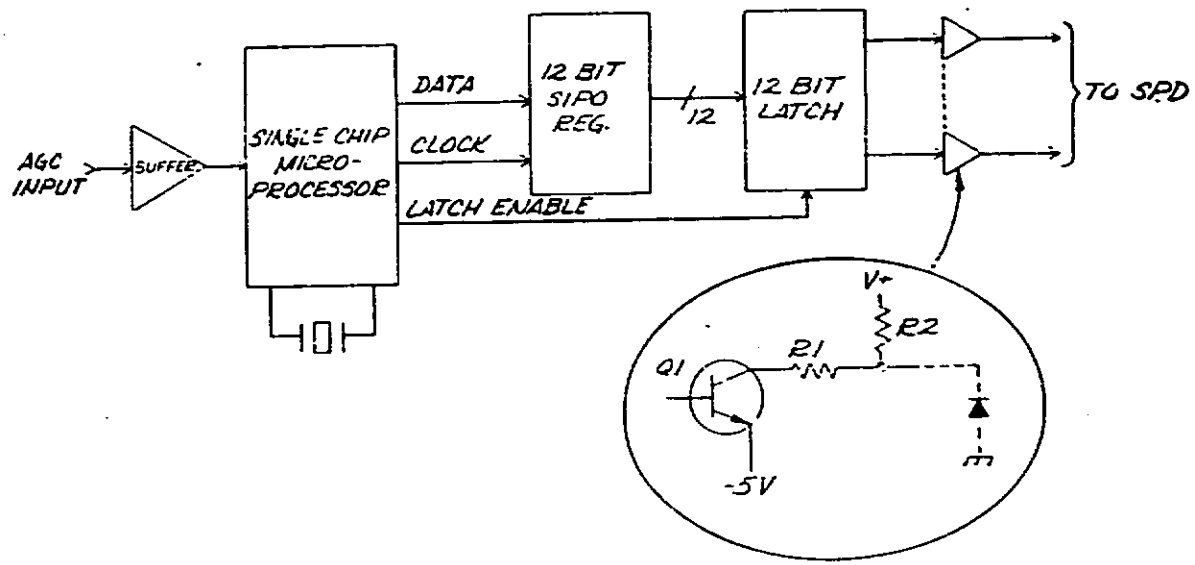

Figure 5-3 Beam Steering Controller Block Diagram

additional discrete stage in the driver circuit for level shifting, the controller power supply will be shifted 5.0 volts negative with respect to system ground.) When Q1 is biased on, current flows through the PIN diode, R1, and Q1 to the negative supply with R1 limiting the current to a safe value - typically between 10 to 40 ma. When Q1 is biased off, the current in this loop is reduced to zero with R2 pulling the cathode to a positive voltage in order to guarantee that the PIN diode stays reverse biased.

5.3 STEPPER MOTOR CONCEPT

As shown in Figure 5-4, the controller consists of two sections - a microprocessor and the stepper motor driver electronics.

The microprocessor performs the task of beam steering. In this concept, the beam steering is performed mechanically instead of electronically by physically rotating the antenna array by means of a stepper motor. (See Figure 5-4). The microprocessor will keep track of current and new antenna positions and rotate the antenna array by generating the stepper motor timing signals in software. This technique will keep the stepper motor drive electronics to a minimum and hence reduce the costs.

5.4 CONCLUSIONS

Using the above three concepts, we have developed detailed piece part listing and pricing estimates which were later used to obtain the full pricing of the electronics controller. The results show that the electronics controller is the least expensive component in the antenna system. Although in these concepts, we have emphasized the use of the simple design with AGC signal processing to develop the electronics box, we believe the additional price impact of using a monopulse tracking receiver can also be investigated.

The advantages of using AGC signal tracking are as follows:

- simplicity in design and construction of the electronics box
- less complex antenna design

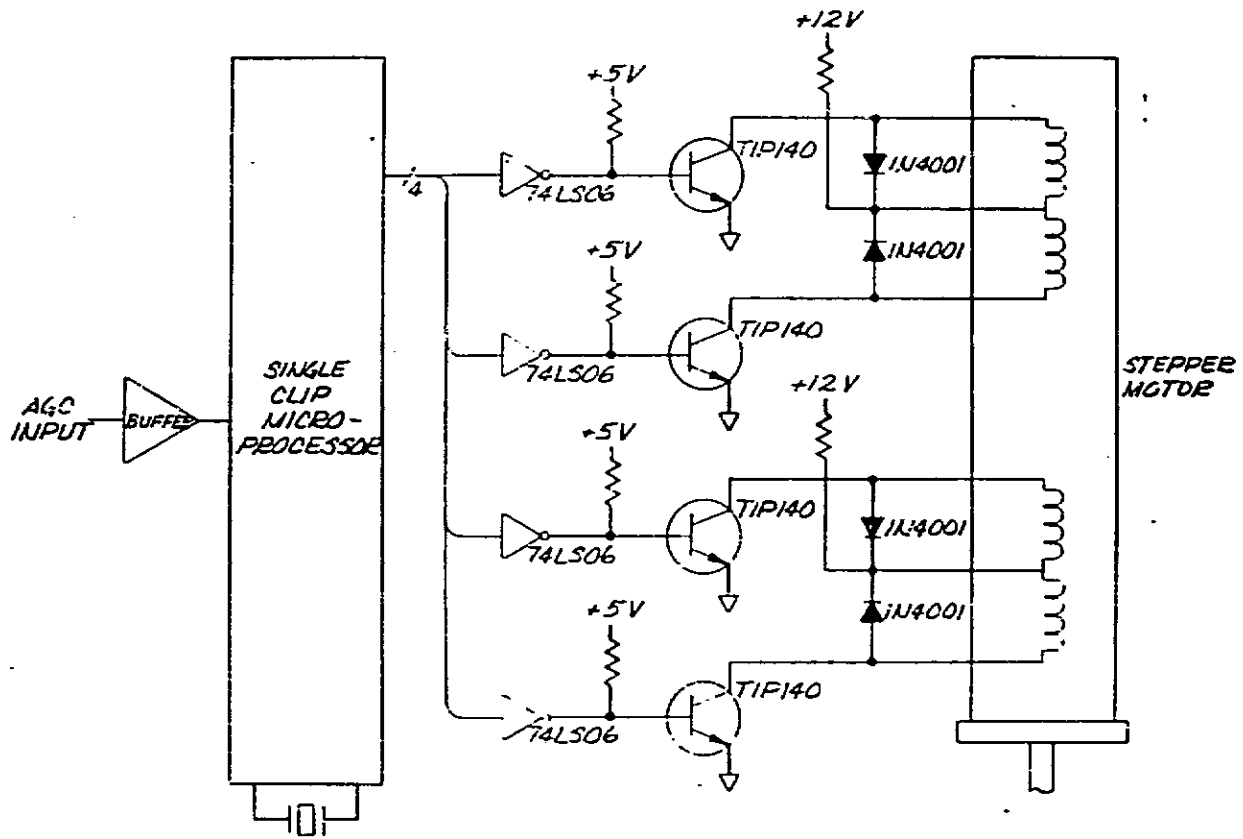

Figure 5-4 Steppe Motor Beam-Steering Controller Block Diagram

The disadvantages are:

- not very accurate in locking on a signal within the main beam which can cause additional gain loss. The design objective for the LMV antenna is to have a good pointing accuracy with tolerances of ± 0.5 dB or better.
- if less accurate locking tolerance is maintained within the main beam (example: ± 1 dB or worse), the isolations in multi-satellite system can also be degraded.

Section 6
ANTENNA OPERATION IN MULTIPLE SATELLITE SYSTEM

6.1 Introduction

Two of the proposed LMV antenna concepts were studied with respect to isolation levels between desired and undesired satellites in a two satellite system. Chiefly,two basic methods exist for achieving greater isolation than would be available if the isolation between satellites was not a consideration. The radiation pattern of the array can be altered through the use of a non-uniform amplitude taper in the feed system; the two satellites can use orthogonal polarizations where the LMV antenna can switch between the two options; or the two methods can be used in conjunction for even higher isolation in certain cases. The two concepts studied for isolation characteristics in a two satellite system were the electronically steered phased array and the mechanically steered tilted array.

6.2 Isolation in a Two Satellite System

The following study of isolation between desired and undesired satellites in a two satellite system is based upon two geosynchronous satellites with longitudes of 80^{0} and 113^{0}. The angular difference in pointing angle varies depending on the user location. Therefore, five locations at various points on the perimeter of CONUS were selected in order to determine the position and amplitude in the radiation pattern of the undesired satellite.

The most accurate method of determining the relative isolation between satellites is to compare the amplitude of the radiation pattern at the main beam when pointed at the desired satellite and the amplitude at the location of the undesired satellite when the main beam is still pointed at the desired satellite. All calculations of isolation were performed in this manner. However, in order to visualize the mechanism by which the isolation is achieved, two-dimensional contour plots based on finite ground plane analysis with GTD were drawn so that overlays with the desired and undesired satellite locations could be superimposed. These plots which do not include the effects of mutual coupling allow the determination of whether the undesired satellites lie in the sidelobe region, the main beam, or both. This determination is very important when trying to increase the level of isolation.

For cases where the undesired satellite positions lie only in the sidelobe region, the isolation can be increased by amplitude tapering of the array feed network. However, many trade-offs exist in choosing the taper level to be used. The use of amplitude tapering causes a decrease in gain; therefore, only the minimum taper level should be used to reduce the sidelobes. In addition, beam broadening occurs which can cause the undesired satellite positions to end up on the skirts of the main beam. For undesired satellite locations in the sidelobe region, amplitude tapering can be employed, but the level of tapering should be only that required to achieve the proper isolation.

If the undesired satellite positions were to occur entirely within the main beam, the best approach to increasing isolation would be through the use of two orthogonal polarizations. Polarization is of minimal use in the sidelobe region of most arrays, because the sidelobes do not maintain high isolation to the cross-polarized component. However, within the main beam the isolation between the co-polarized and cross-polarized signals is usually very good.

Depending on the satellite spacing and the antenna beamwidth, the undesired satellite in a two satellite system may radiate into the sidelobe region from one location and into the main beam from another. In this case, a combination of polarization isolation and tapering may be used. This approach causes the level of sidelobe radiation to be reduced in any polarization through the use of the tapered feed system, and the undesired radiation into the main beam is reduced through the use of two orthogonal polarizations. Each antenna concept along with information about the satellite locations and range of user locations must be evaluated independently based on all of the above considerations.

The predicted isolation levels for the various isolation techniques are shown in Table 6-1 for the electronically steered conformal phased array and the mechanically steered four element tilted array. The values quoted in the table are based on the worst case results of calculations of isolation from many locations within CONUS. In order to see the location of the undesired satellite radiation with respect to the desired radiation, two dimensional contour plots of the radiation pattern for each of the two antennas with and without tapering are shown in Figures 6-1 through 6-4. Transparent overlays for five CONUS

TABLE 6-1. ISOLATION IN TWO SATELLITE SYSTEM
(80^{0} AND 113^{0})

		TAPER LOSS	AXIAL RATIO FOR 1ST SIDELOBE	ISOLATION PATTERN	ISOLATION POLARIZATION	ISOLATION BOTH
PHASED ARRAY	(WITHOUT TAPER)	0 dB	LINEAR	13 dB	0 dB	13 dB
PHASED ARRAY	(WITH TAPER)	0.7 dB	LINEAR	20 dB	0 dB	20 dB
1x4 TILTED ARRAY	(WITHOUT TAPER)	0 dB	10 dB	13 dB	5 dB	18 dB
1x4 TILTED ARRAY	(WITH TAPER)	0.7 dB	10 dB	20 dB	5 dB	25 dB

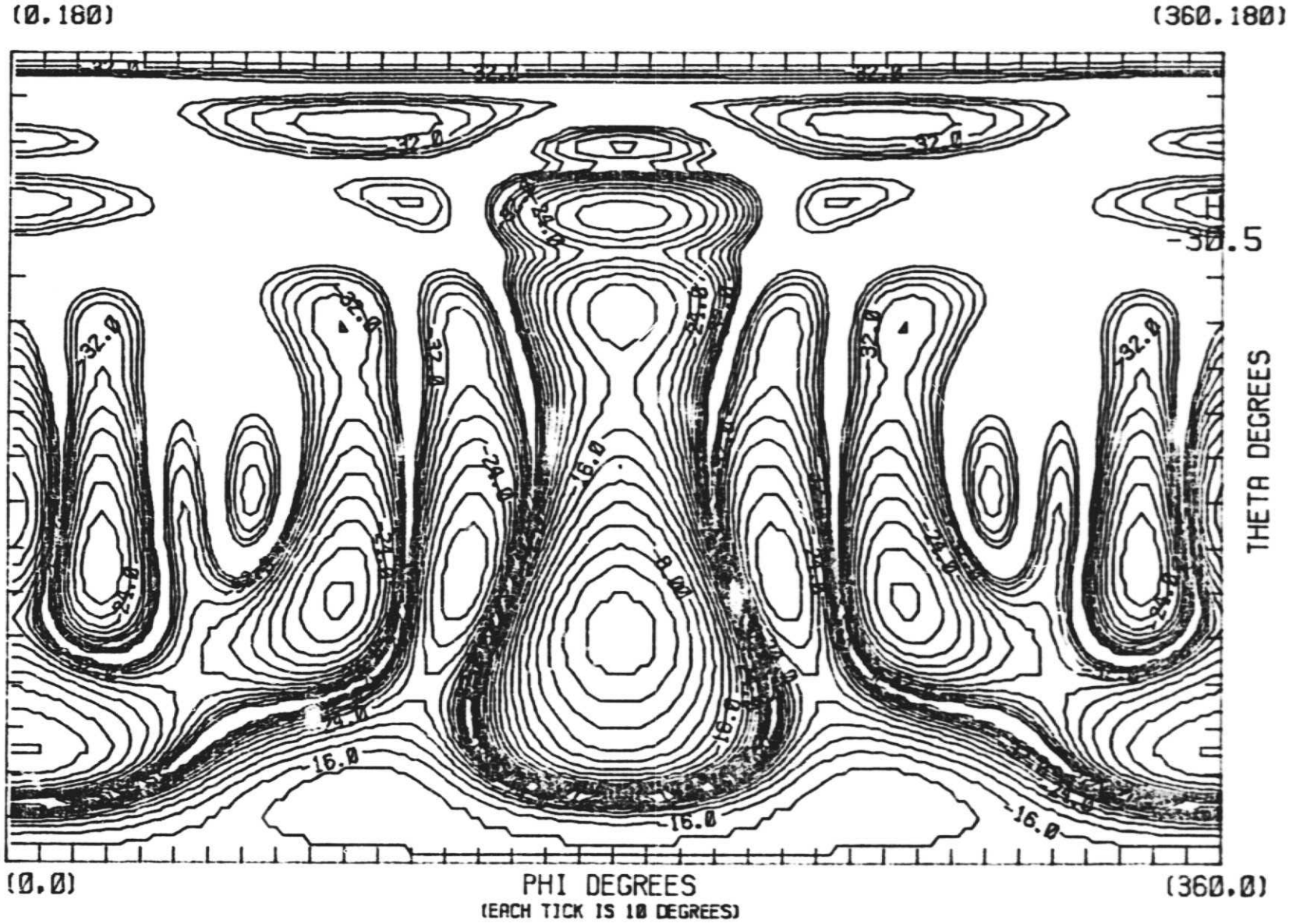

Figure 6-1

PHASED ARRAY WITHOUT TAPER

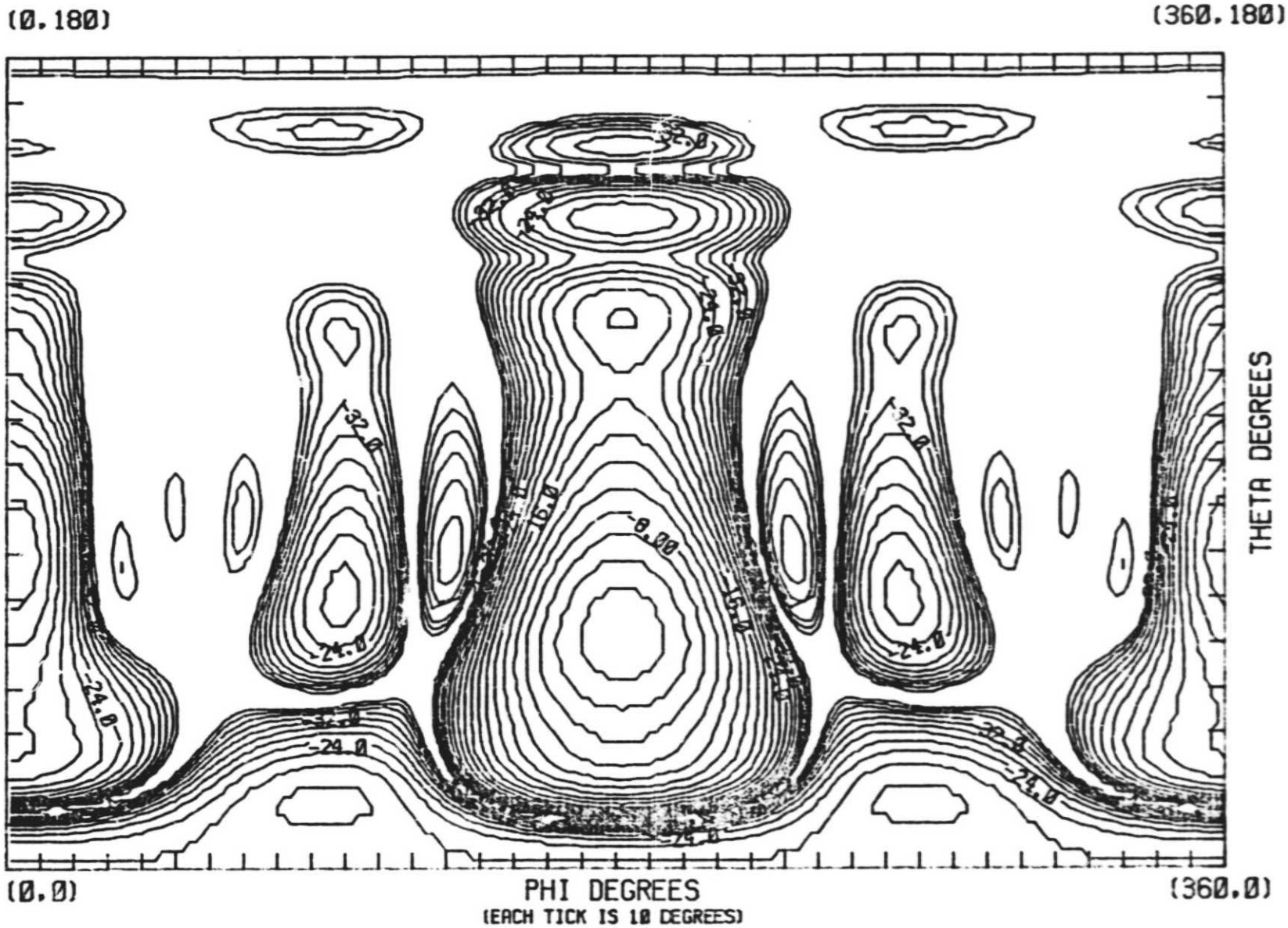

Figure 6-2

PHASED ARRAY WITH TAPER

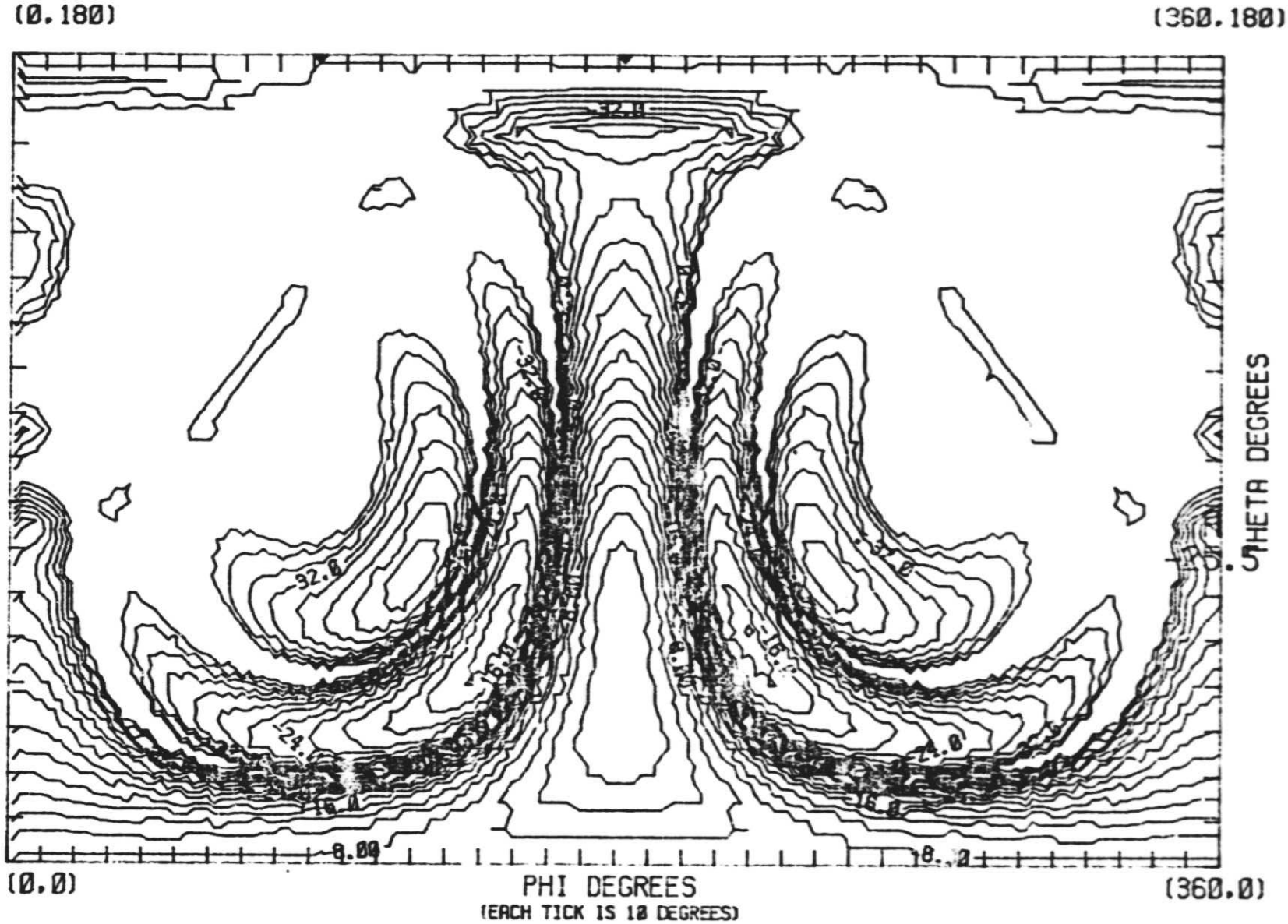

Figure 6-3

1X4 TILTED ARRAY WITHOUT TAPER

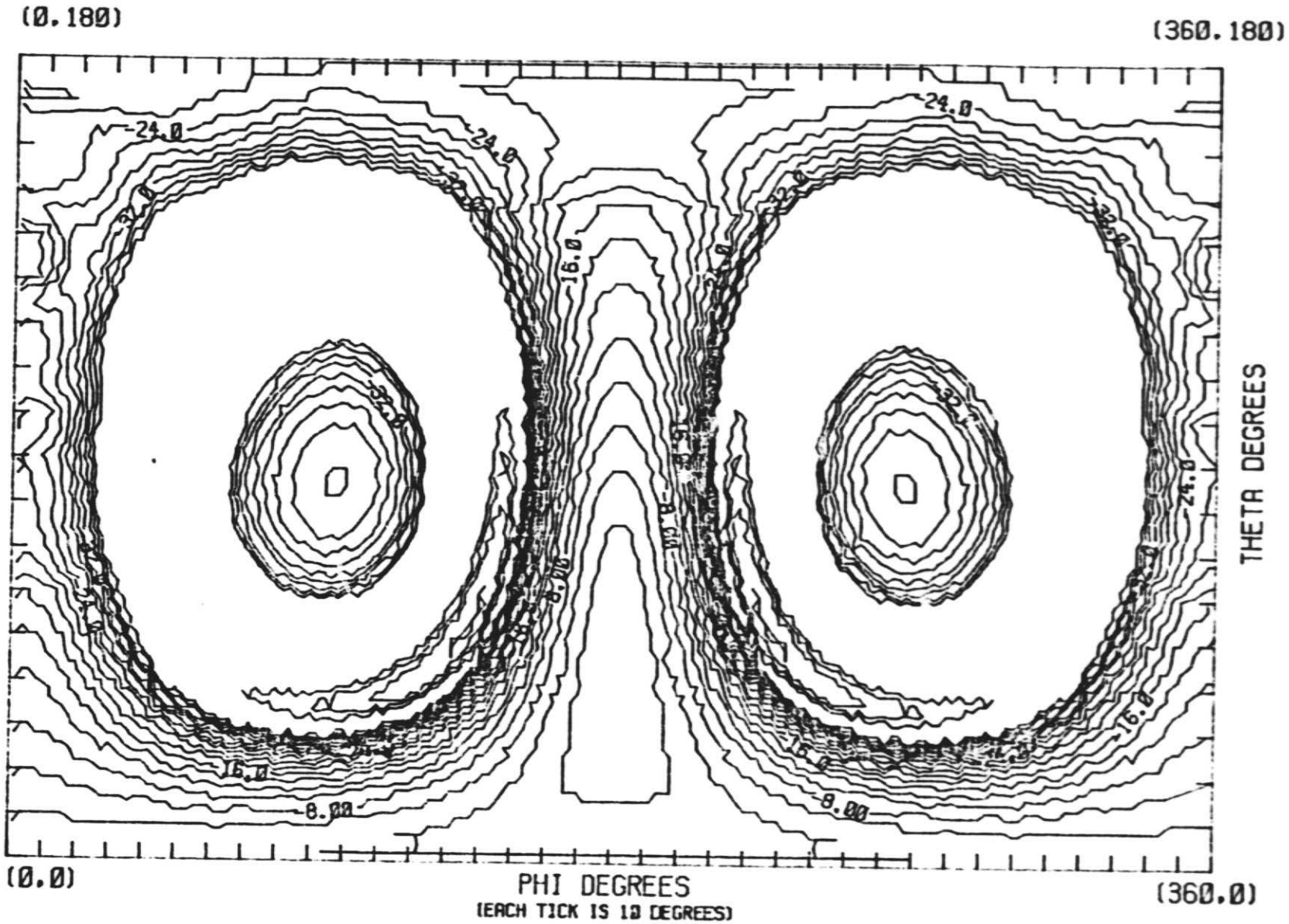

Figure 6-4

1X4 TILTED ARRAY WITH TAPER

locations are included with this report and, when laid over the contour plots with the boundaries aligned, allow visual inspection of the location of the undesired satellite radiation. The mechanically steered four element tilted array has a radiation pattern which is independent of pointing direction and does not require elevation steering for CONUS coverage; therefore, the plots provided are accurate indications of the relative power levels for desired and undesired radiation. However, the radiation pattern for the electronically steered conformal phased array changes with both elevation and azimuth steering direction. The plots provided are therefore meant to provide a general indication of the positions of undesired radiation; the actual relative levels will only be correct for the specific elevation angle shown in the plot.

The contour plots show the magnitude of the radiation pattern as a function of theta and phi. The contour lines are in 2 dB increments and labeled every 8 dB. Theta and phi coordinates are shown with tick marks placed every 10 degrees. Theta values are measured from zenith - therefore, theta equal to 60 degrees is equivalent to a 30 degree elevation angle from horizon.

The transparent overlays are placed on the contour plots so that the borders are aligned. There are two cases shown for the 2 satellite system. The first one farthest to the left is for 80 degree longitude satellite undesired and 113 degree longitude satellite desired. These two points are connected with a straight line in order to keep the two cases separate. The other case to the right shows the 80 degree longitude satellite as the desired pointing direction with the 113 degree longitude satellite in the undesired direction. The description is valid for all two satellite system overlays.

The figures shown for isolation in a two satellite system in Table 6-1 give 13 dB pattern isolation for both the tilted array and phased array without taper. The 13 dB value would be expected for the tilted array which is linear, but the nominal value expected for the phased array which has a circular aperture would be about 17.5 dB. However, since the array factor varies with the azimuth steering direction, worst case conditions give approximately 13 dB sidelobes even though in general the nominal value or slightly lower is achieved. In order to give credence to the 13 dB value, a worst case plot of the phased array is shown with user location in Texas in Figure 6-5. This plot already

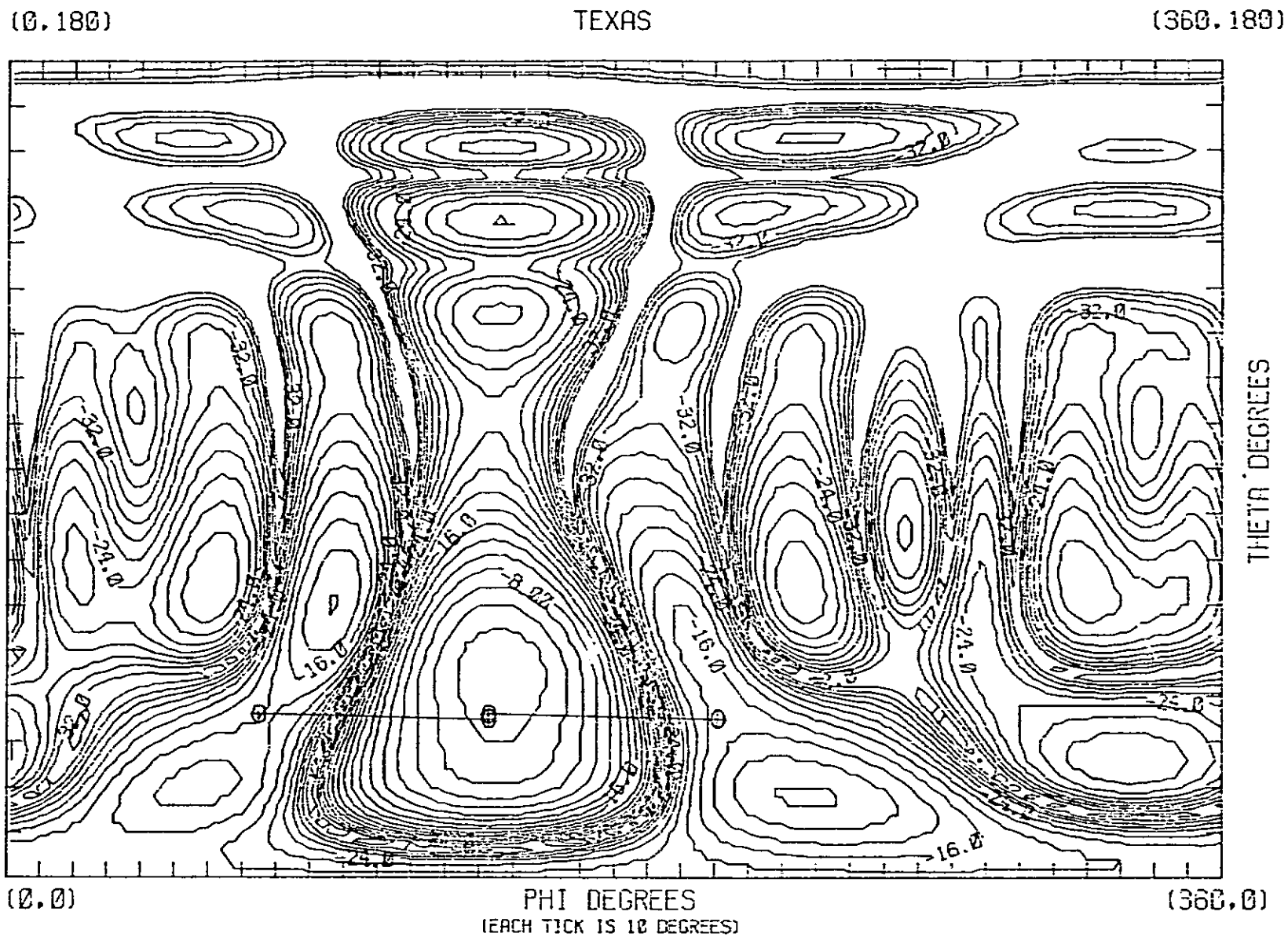

PHASED ARRAY WITHOUT TAPER (TEXAS)

FIGURE 6-5. TWO SATELLITE ISOLATION IN TEXAS SHOWING ≈13 dB WORST CASE.

has the overlay of desired and undesired satellite locations plotted. The right hand side is the worst case with the 80 degree longitude satellite desired and the 113 degree longitude satellite undesired.

The contour plot for the phased array steered to theta equal 60 degrees is shown in Figure 6-6. The transparent overlays can also be placed on this plot and some variation in isolation due to steering angle changes can be seen. It is important to remember, however, that the radiation pattern of the phased array varies with azimuth angle also and the relative isolation levels seen with the overlays and plots given may not be representative of worst case conditions.

6.3 Isolation in a Three Satellite System

A quick study of relative isolation levels was made for a three satellite system with geosynchronous satellite longitudes of 75°, 105°, and 135°. Table 6-2 shows the predicted isolation levels for the two antennas with and without the same amplitude tapers as used in the two satellite system. It is quickly obvious that only moderate isolation levels can be achieved in the three satellite sytem with the two antennas shown. Polarization diversity provides isolation only between the two adjacent satellites; the 75° and 135° satellites have the same polarization. Some special forms of inverse taper may help increase isolation somewhat from the uniform case, but only if the higher sidelobes produced can be held to regions where there is little chance of undesired radiation.

Transparent overlays are included for the three satellite system and can be placed over the contour plots in Figures 6-1 through 6-4, and 6-6 in order to see the desired and undesired locations and relative levels. Again, it is important to remember that the phased array plots are only representative, and the radiation pattern changes with azimuth angle. The overlays are meant to give a general indication of the results, not absolute values.

6.4 Conclusion

The required worst case isolation level of 20 dB can be met by both antennas in a practical two satellite system. The mechanically steered four element tilted array offers the best isolation in a two satellite system, even when the main beam is not directly on the desired satellite. The shape of the main beam in this array is nearly optimal for both coverage and isolation. The electronically

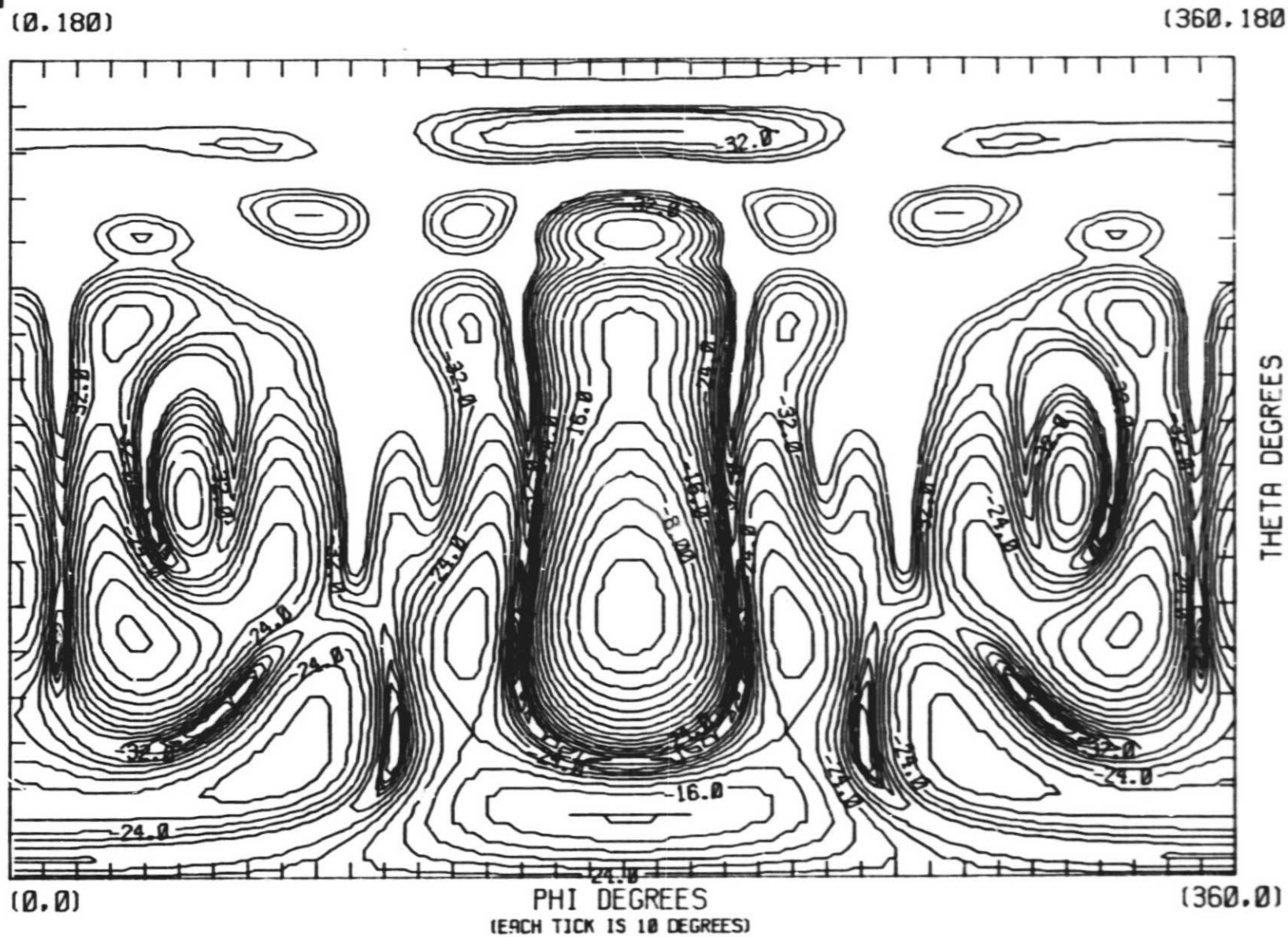

Figure 6-6

PHASED ARRAY WITHOUT TAPER (60)

TABLE 6-2. PRACTICAL WORST CASE ISOLATION IN THREE SATELLITE SYSTEM (75^0, 105^0, AND 135^0)

		TAPER LOSS	AXIAL RATIO FOR 1ST SIDELOBE	ISOLATION PATTERN	ISOLATION POLARIZATION	ISOLATION BOTH
PHASED ARRAY	(WITHOUT TAPER)	0 dB	LINEAR	13 dB	0 dB	13 dB
PHASED ARRAY	(WITH TAPER)	0.7 dB	LINEAR	7 dB	0 dB	7 dB
1x4 TILTED ARRAY	(WITHOUT TAPER)	0 dB	10 dB	13 dB	5 dB	16 dB(1)
1x4 TILTED ARRAY	(WITH TAPER)	0.7 dB	10 dB	7 dB	5 dB	12 dB

(1) NOT THE SUM OF PATTERN AND POLARIZATION - WORST CASE IS PATTERN ISOLATION BETWEEN 75^0 AND 135^0 SATELLITES WHICH HAVE SAME POLARIZATION.

steered conformal phased array can be designed for 20 dB of isolation with the proper amplitude taper in the feed system. However, the pointing algorithm is required to point the main beam very accurately in order to prevent a reduction in isolation below this level.

Table 6-3 shows the best case and worst case isolation levels and corresponding locations of the five user positions studied. Values are given for both the mechanically steered tilted array and the electronically steered conformal phased array. Worst case isolation levels given in Table 6-1 may be lower than worst case values shown in Table 6-3 since the values in the former are based on predicted isolation levels over all of the CONUS rather than just five specific locations as the later.

In a three satellite system the 20 dB isolation requirement would be either very difficult or impossible to achieve with the two antennas investigated. In addition, the variation in elevation pointing direction is much greater in a three satellite system, and this places a much greater demand on the other parameters in the system. Minimum gain levels in CONUS would approach those shown for Alaska in the two satellite system. The complexity of an antenna in a three satellite system is also much greater than that in the two satellite system.

TABLE 6-3. BEST AND WORST CASE ISOLATION LEVELS FOR FIVE EXTREME CONUS LOCATIONS IN A TWO SATELLITE SYSTEM

	WORST CASE		BEST CASE	
PHASED ARRAY (WITHOUT TAPER)	TEXAS	13 dB	WASHINGTON	17 dB
PHASED ARRAY (WITH TAPER)	TEXAS	21 dB	CALIFORNIA	25 dB
1x4 TILTED ARRAY (WITHOUT TAPER)	MAINE	13 dB	FLORIDA	19 dB
1x4 TILTED ARRAY (WITH TAPER)	CALIF.	24 dB	TEXAS	34 dB

Section 7
COST ESTIMATES

Estimating the cost of producing an antenna or antenna systems can be accomplished in a number of ways. The approach taken to develop a cost estimate depends on the amount of design information available and the time allowed to generate the estimates. The two extreme methods of estimations are the educated guessing and the highly accurate learning curve methods. When designs are in the very early concepted phase, cost estimation is based on educated guessing. The accuracy of it depends on the experience of the people developing the estimate and the similarity of the design with products produced in the past.

The highly accurate cost estimation method is based on the knowledge of the details of the antenna design and on the production of a few prototype units. With actual piece part prices, material prices and assembly and test time known, cost estimates should be accurate to within a few percent. Estimating for large volume is then accomplished using the learning curve method.

The number of units that is to be produced must be considered in developing cost estimates. Small quantity production does not justify large expenditures for sophisticated tooling or automation while large quantities of production do justify the expenses for sophisticated tooling and automation.

Our cost estimates that were generated for the three types of antennas, that is for the electronically steered (conformal), the electronically switched (non-conformal), and mechanically steered (conformal and non-conformal) fall somewhere in between the two extreme of the highly accurate method and the educated guessing method.

Two approaches were used to develop a cost estimate for each of the design concepts. The first approach was to take each design, detail it to the

level of being able to identify most of the materials and piece parts. Estimates are then made on material prices and piece part co [illegible] Some of the material and piece part estimates were made by experienced people, others were quotes from vendors of piece part manufacturers.

A production flow plan was developed and each assembly and test step was estimated by experienced people. This type of cost estimate can be quite accurate if the individual or individuals preparing the cost have had experience with similar designs.

The second approach that was used to develop the cost estimates for the four types of antennas, is based on historical cost data generated on past programs. The data base for this approach includes antenna designs for over two thousand applications. Quantities of antennas for these applications range up to ten thousand units.

Material and piece part cost is determined as accurately as possible using the available level of design details. The material and piece part cost is then multiplied by two factors to give the total antenna cost. One factor relates to the level of complexity in the production of the antenna and the other relates to the total number of units that are to be produced. The complexity factor is a number between one and ten and the quantity factor is a number equal to or less than one.

EXAMPLE:

(Material Cost)	X	(Complexity Factor)	X	(Quantity Factor)	=	Final Cost
$80.00	X	6	X	.7	=	$336.00

Both the complexity factor and the quantity factor are determined from past programs and applied to a new design. If a new design is very similar to a past design, and similar quantities are required, picking the complexity factor and quantity factor are easy and the final cost can be very accurate. If the new design is unlike any previous designs the accuracy is dependent on the experience of the individual or individuals preparing the cost estimates.

Experience has shown that estimating new designs using the two methods described are usually very good. Except for cases where a total design change was required or the initial concept would not work, the estimates are within 25 percent.

By estimating a program two ways and not having a large discrepancy between the two methods should give some assurance that the cost estimates are reasonably accurate.

Figures 7-1 and 7-2 show the cost estimates as a function of gain for the basically three types of antenna systems, produced in 10,000 units in three years and 100 units in one year, respectively. The cost for the mechanically steered antenna is insensitive to gain change. This is due to the predominately, higher cost of the mechanical drive system which does not change appreciably with smaller antenna size (that is lower gain antennas).

In the electronically steered antenna, however, the major cost driver is the cost for fabricating and testing the phase shifters. A lower gain antenna with a lower number of phase shifters basically seven phase shifters, has a lot lower cost than the higher gain antenna with nineteen or more phase shifters.

It should be noted that these prices are wholesale prices and they do not include the cost for the development of the prototype and production units. The cost to the consumer would be as high as 50% above the quoted prices. Also, tooling cost is a very small fraction of the total cost. Typically, it is between one and two percent of the total cost. For example, the tooling cost for the phased array is 10,000 units X #3,800 X 1% = $380,000.

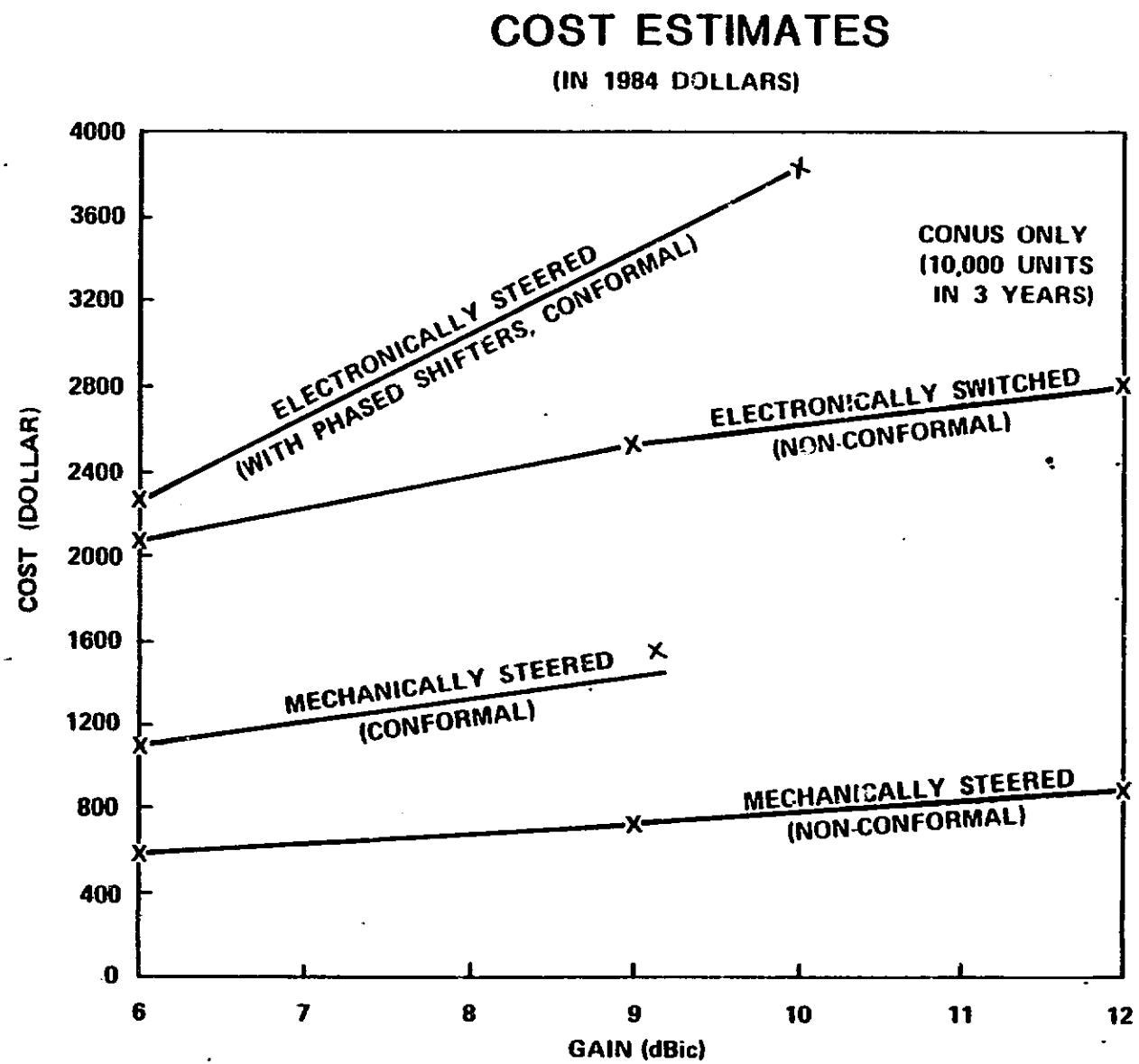

Figure 7-1 Costs Estimates for 10,000 Units Produced in Three Years

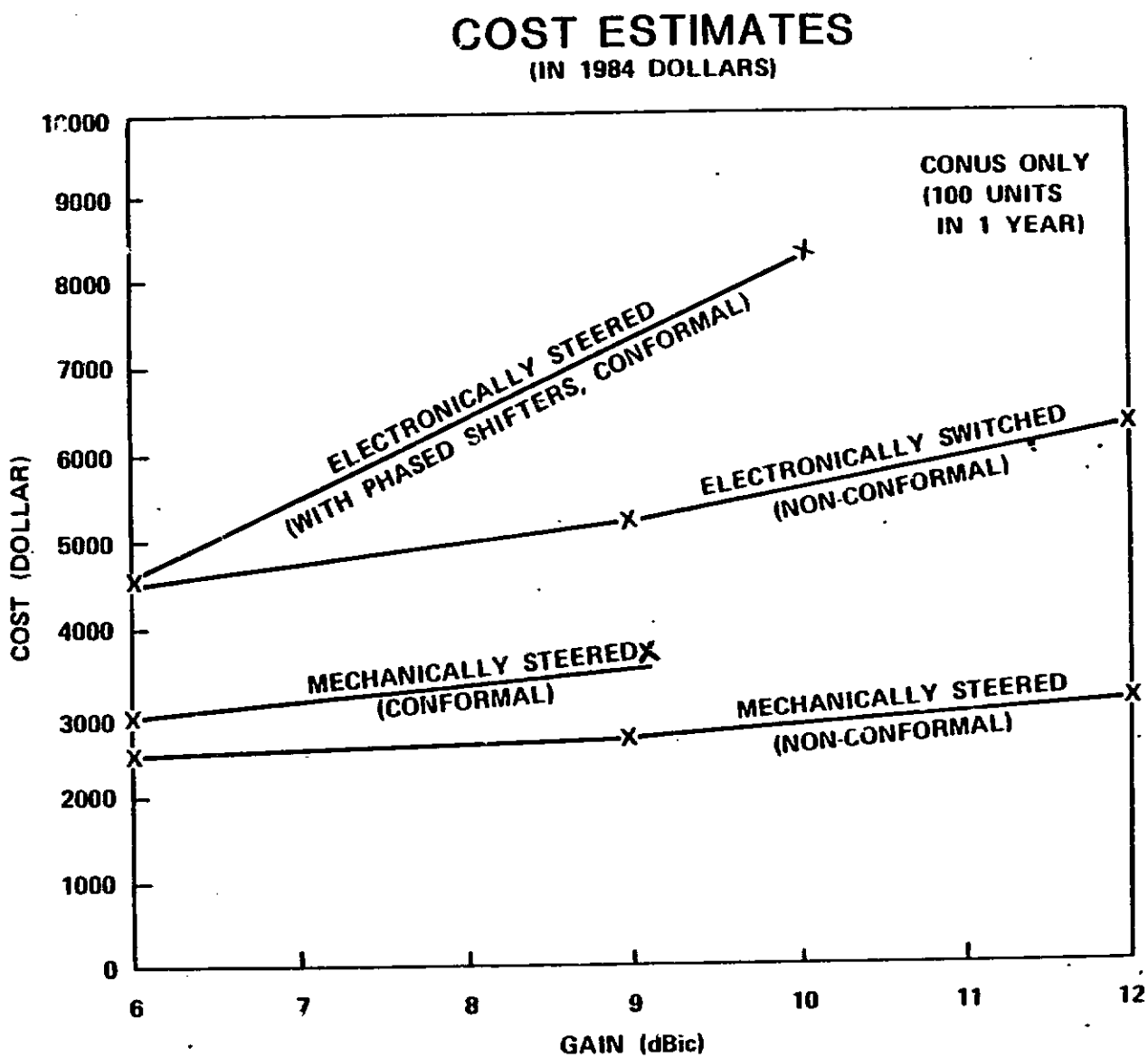

Figure 7-2 Cost Estimates for 100 Units Produced in One Year

Section 8
RECOMMENDATIONS

We recommend that a few promising antenna designs be selected for thorough investigation. Their overall RF and system performance should be determined experimentally. The investigation should include the actual effect of the vehicle finite ground plane. It should also show some methods for improving axial ratio near the horizon (that is low elevation angles). These include reactive loading of the ground plane, or making some equivalent impedance surface that enhances the normal components of the electric field (i.e. normal to the ground plane), which is suppressed due to the extremely large conductivity of the ground plane.

In general, widely separated elements have very low level of mutual couplings. However, in phased array application where the beam is electronically steered, the radiating elements are closely spaced and mutual coupling can be strong; this can cause the active impedance to vary as a function of scan angle. Therefore, it is recommended that this phenomenon be investigated to determine its effect on antenna performance.

An extensive study is also needed into the types and accuracies of the antenna pointing systems. The study should show the advantages and disadvantages of each closed and open loop tracking system. The goal for low cost designs is very essential in the selection of these antennas.

It should be noted that in estimating the cost of antennas in this report, intermediate levels of production were assumed, with generally small amounts of expenses apportioned for tooling and manufacturing. However, large volume production, example: 100,000 units or more, makes it very attractive to have an automated assembly system. Thus, the per unit cost can, in general, come down due to the lowering of labor cost. We, therefore, recommend that high volume production be assessed to determine the extent of antenna cost reduction.

Finally, we propose building a few prototype units to actually study their performance under various environmental conditions such as heat, ice, snow, wind, etc. Under these conditions, antennas can have wide variations in their performance, specifically when they are mounted on the outside of a vehicle and being exposed to a variety of weather conditions.

APPENDIX A

Mechanically Steered Antenna Design Concepts

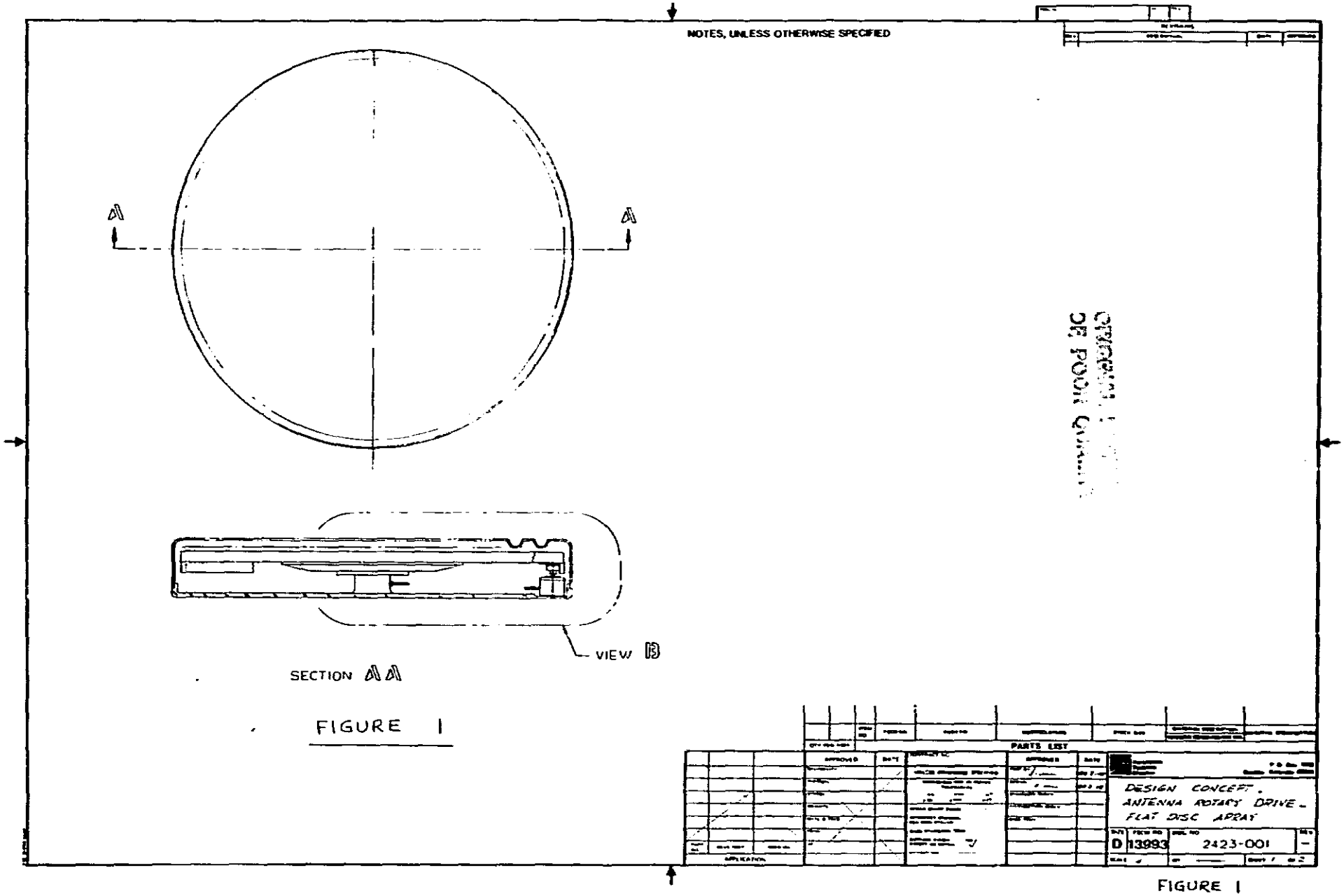
NOTES, UNLESS OTHERWISE SPECIFIED
A
A
VIEW B
SECTION AA
FIGURE 1
PARTS LIST
DESIGN CONCEPT.
ANTENNA ROTARY DRIVE -
FLAT DISC ARRAY
D 13993
2423-001

FIGURE 1

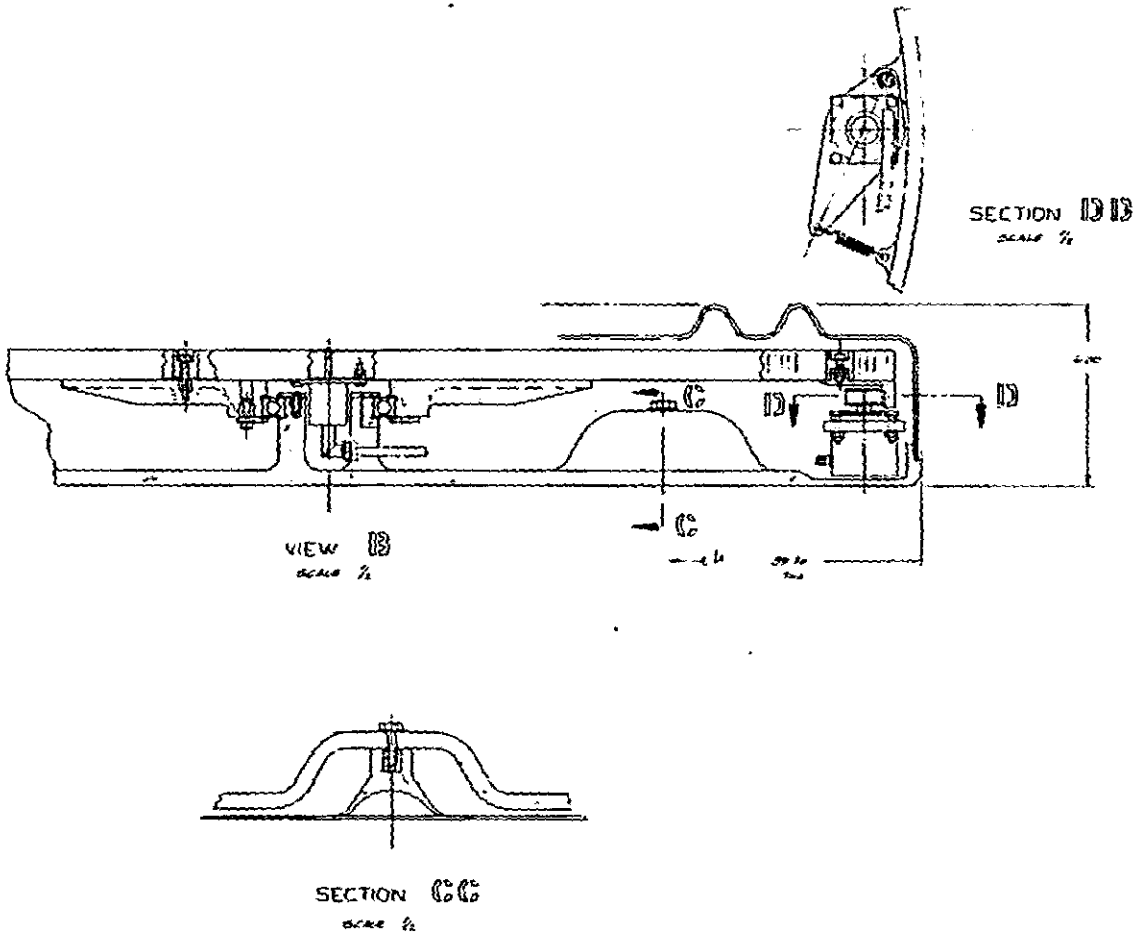

FIGURE 2

OF POOR QUALITY

D	13993	2423-001	

FIGURE 2

NOTES UNLESS OTHERWISE SPECIFIED

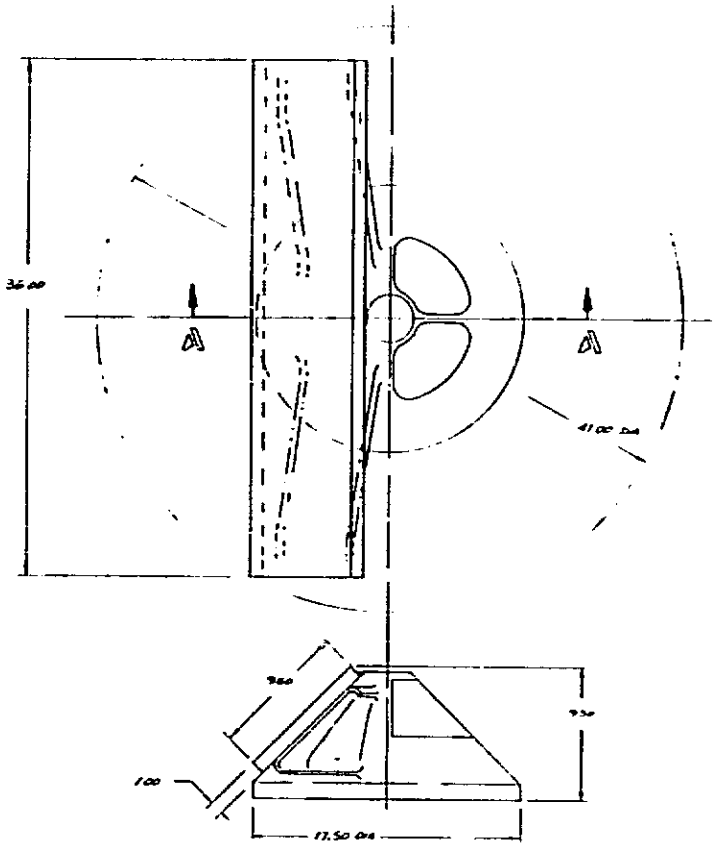

FIGURE 3

PARTS LIST

DESIGN CONCEPT,
ANTENNA ROTARY DRIVE-
45° ELEVATION ARRAY

D 13993 2423-002

FIGURE 3

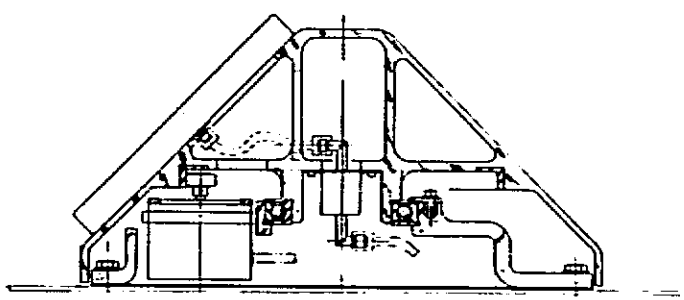

SECTION AA
SCALE 1/2

FIGURE 4

D	13993	2423-002	–

FIGURE 4

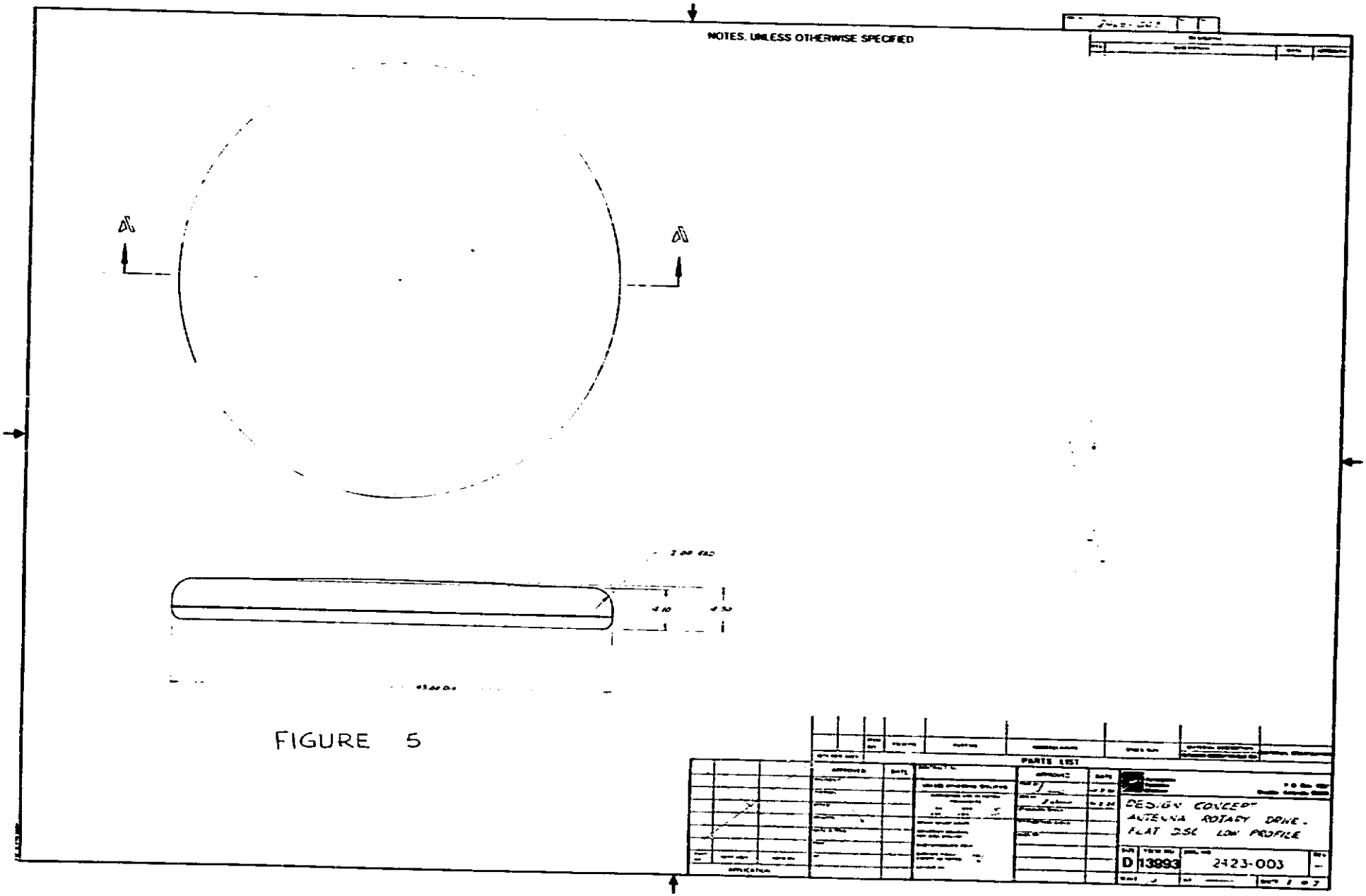

FIGURE 5

FIGURE 5

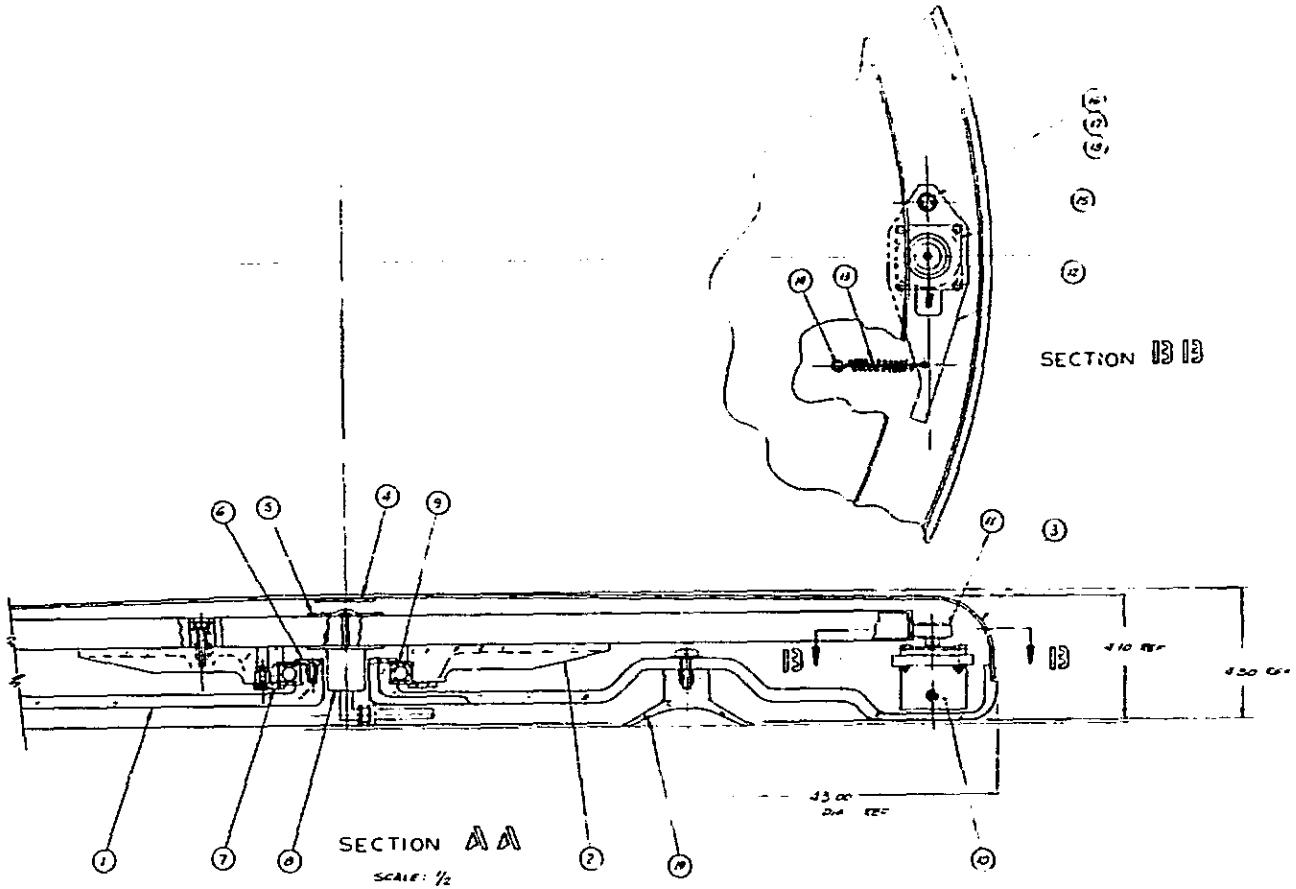

FIGURE 6

ORIGINAL PAGE IS
OF POOR QUALITY

D	13993	2423-0C3	

FIGURE 6

NOTES, UNLESS OTHERWISE SPECIFIED

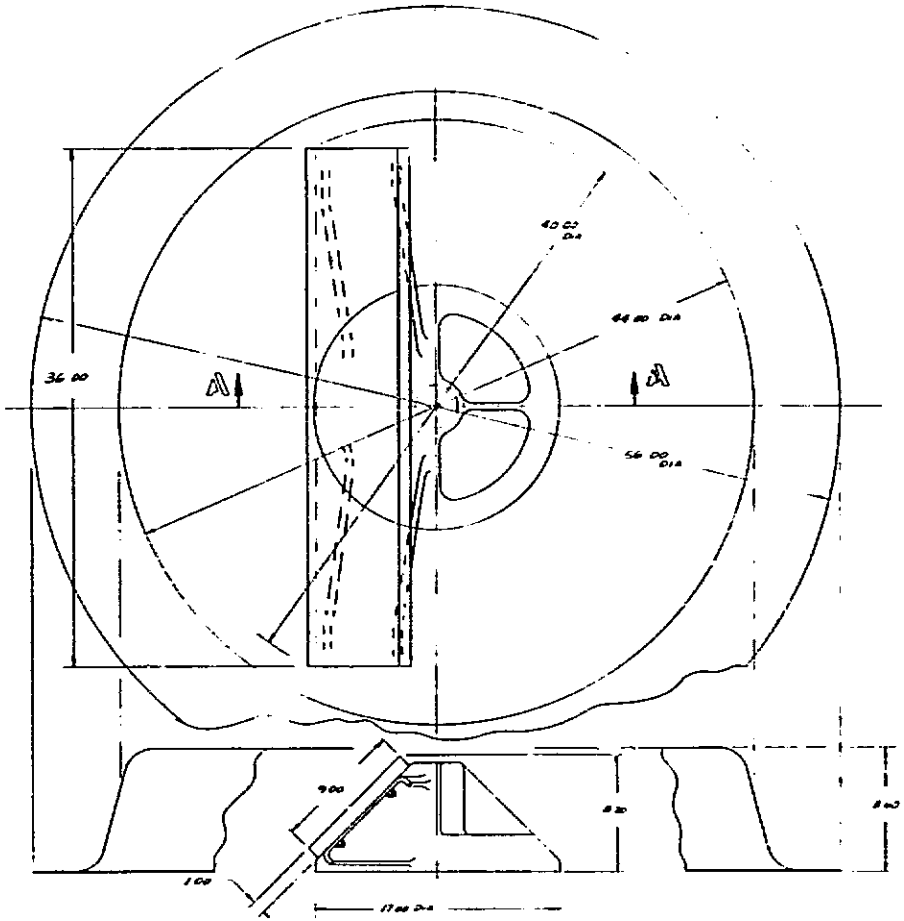

FIGURE 7

PARTS LIST

DESIGN CONCEPT.
ANTENNA ROTARY DRIVE -
45° ELEV ARRAY PLUS RADOME

D 13993 2423-004

FIGURE 7

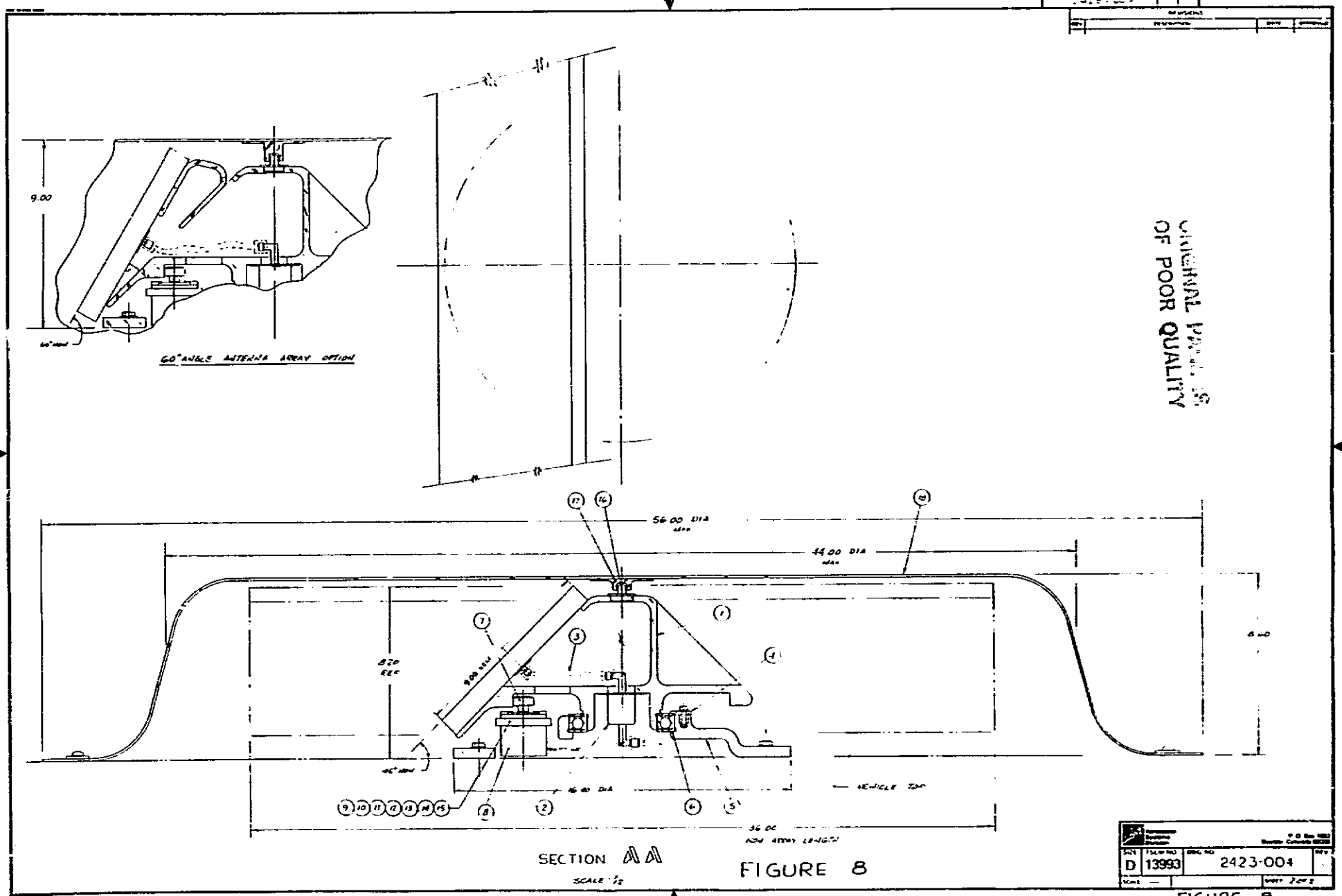

FIGURE 8

ORIGINAL PAGE IS
OF POOR QUALITY

APPENDIX B

Two and Three Geosynchronous Satellite Systems Seen by a Land Vehicle Antenna from Five CONUS Cities

WASHINGTON

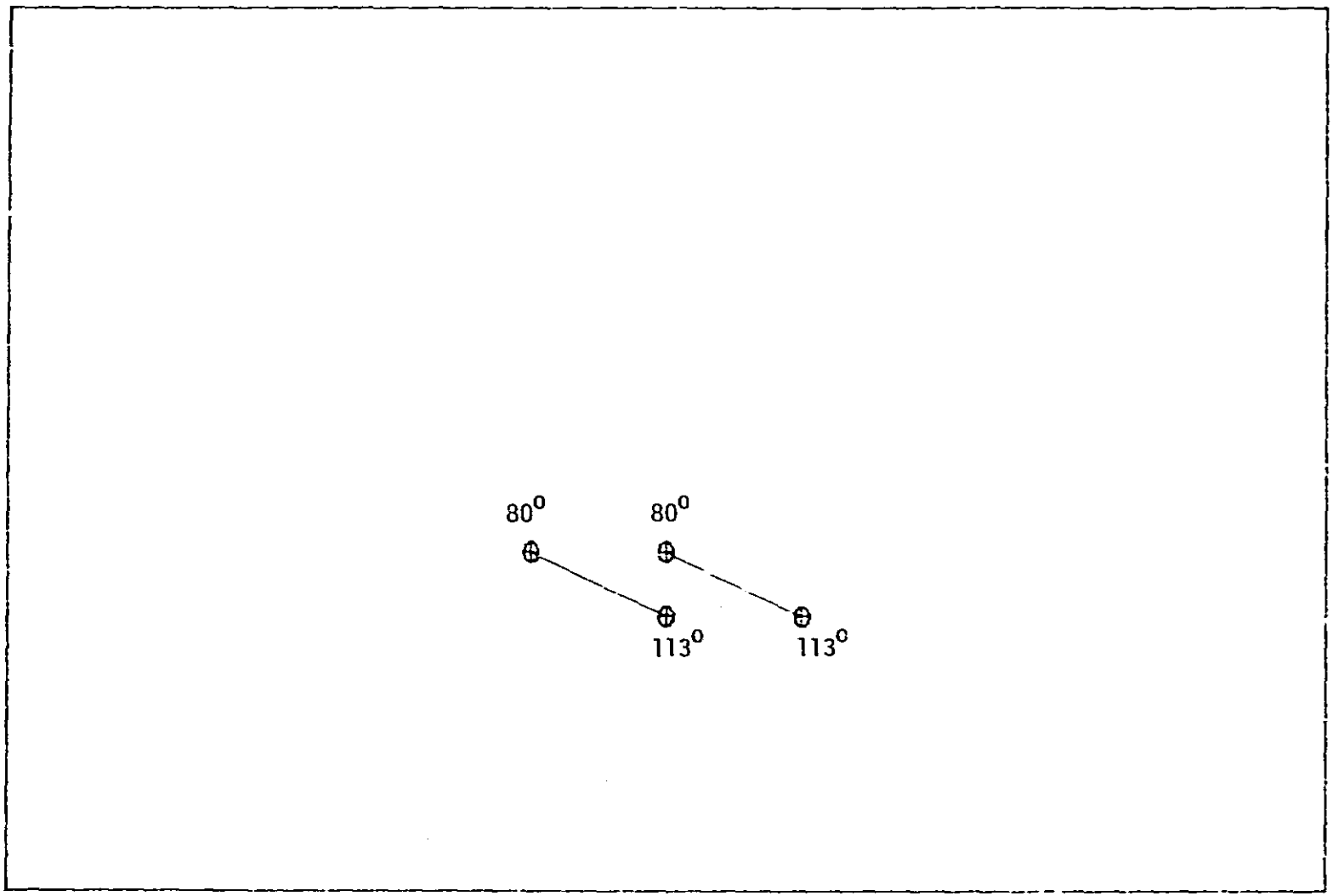

Two Geosynchronous Satellite System
Located at 80° & 113° West Longitude

CALIFORNIA

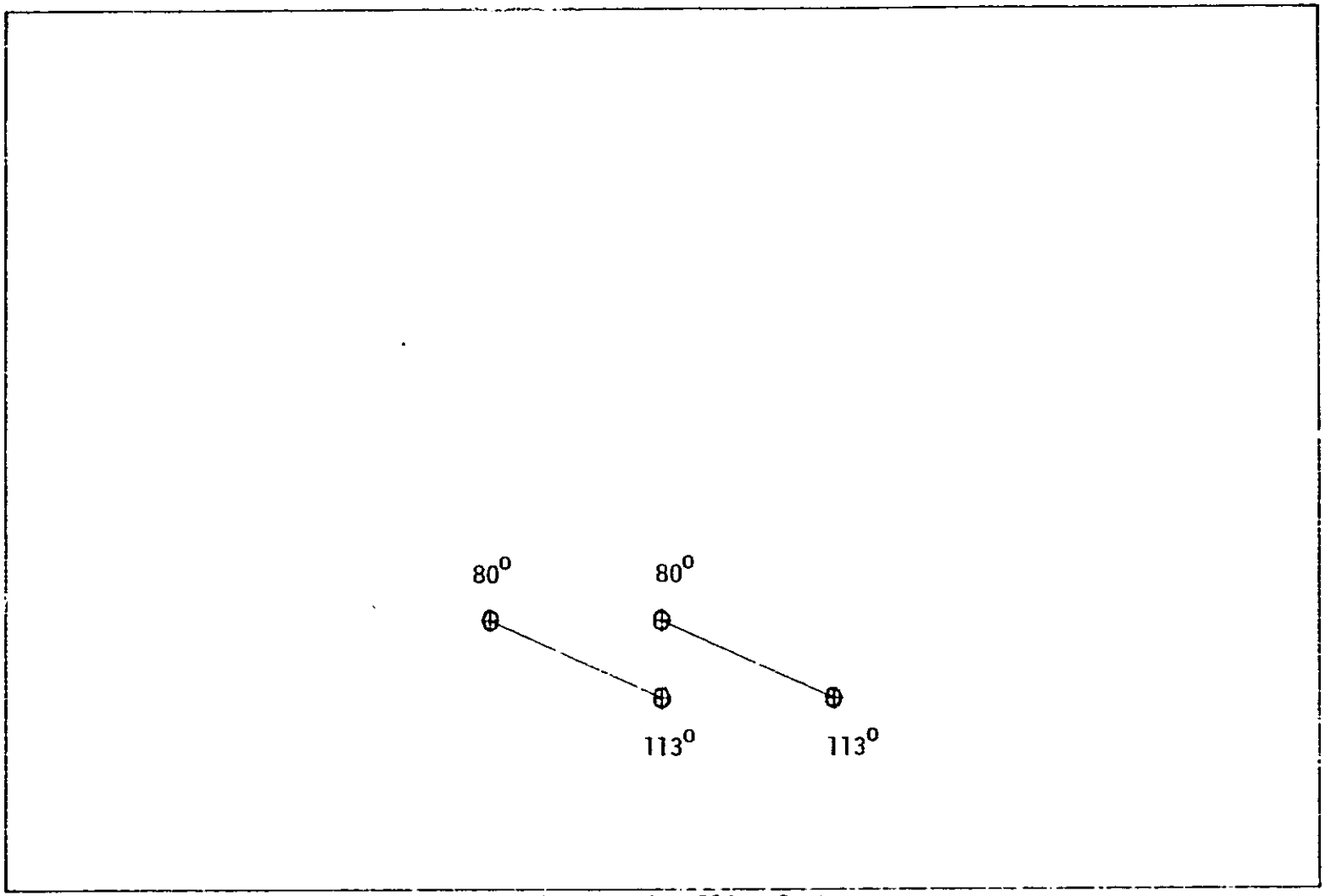

Two Geosynchronous Satellite System
Located at 80° & 113° West Longitude

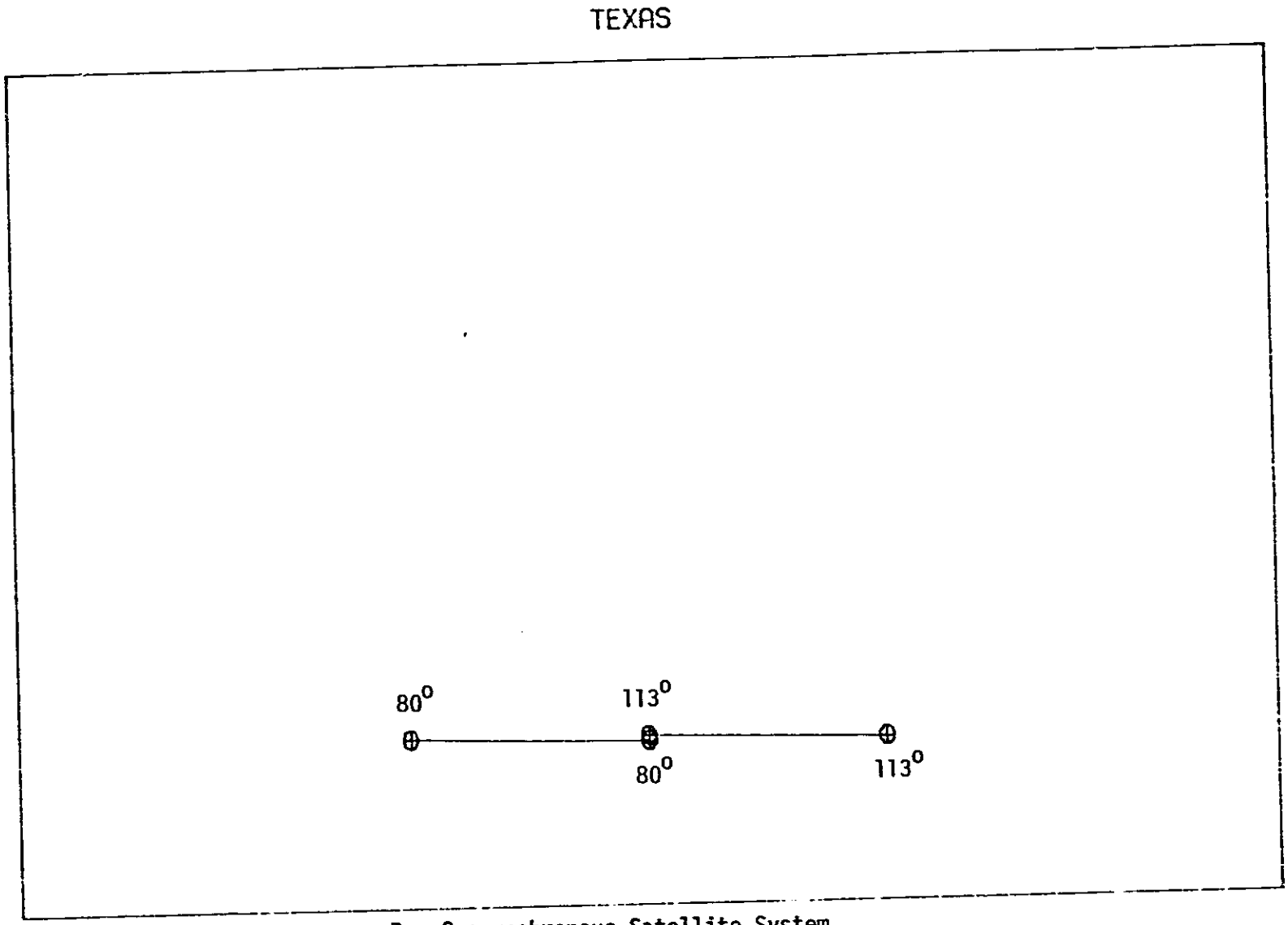

Two Geosynchronous Satellite System
Located at 80° & 113° West Longitude

FLORIDA

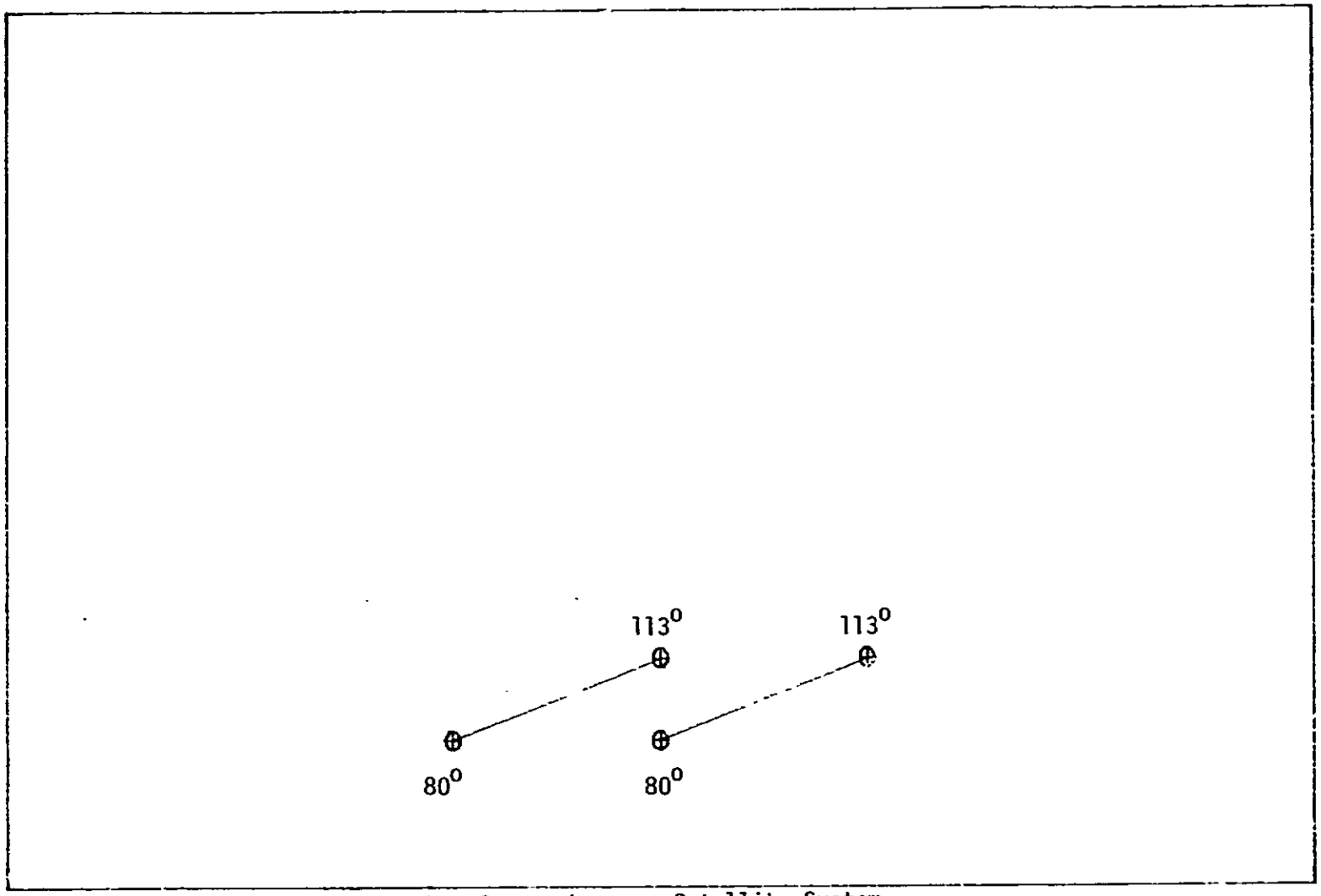

Two Geosynchronous Satellite System
Located at 80° & 113° West Longitude

MAINE

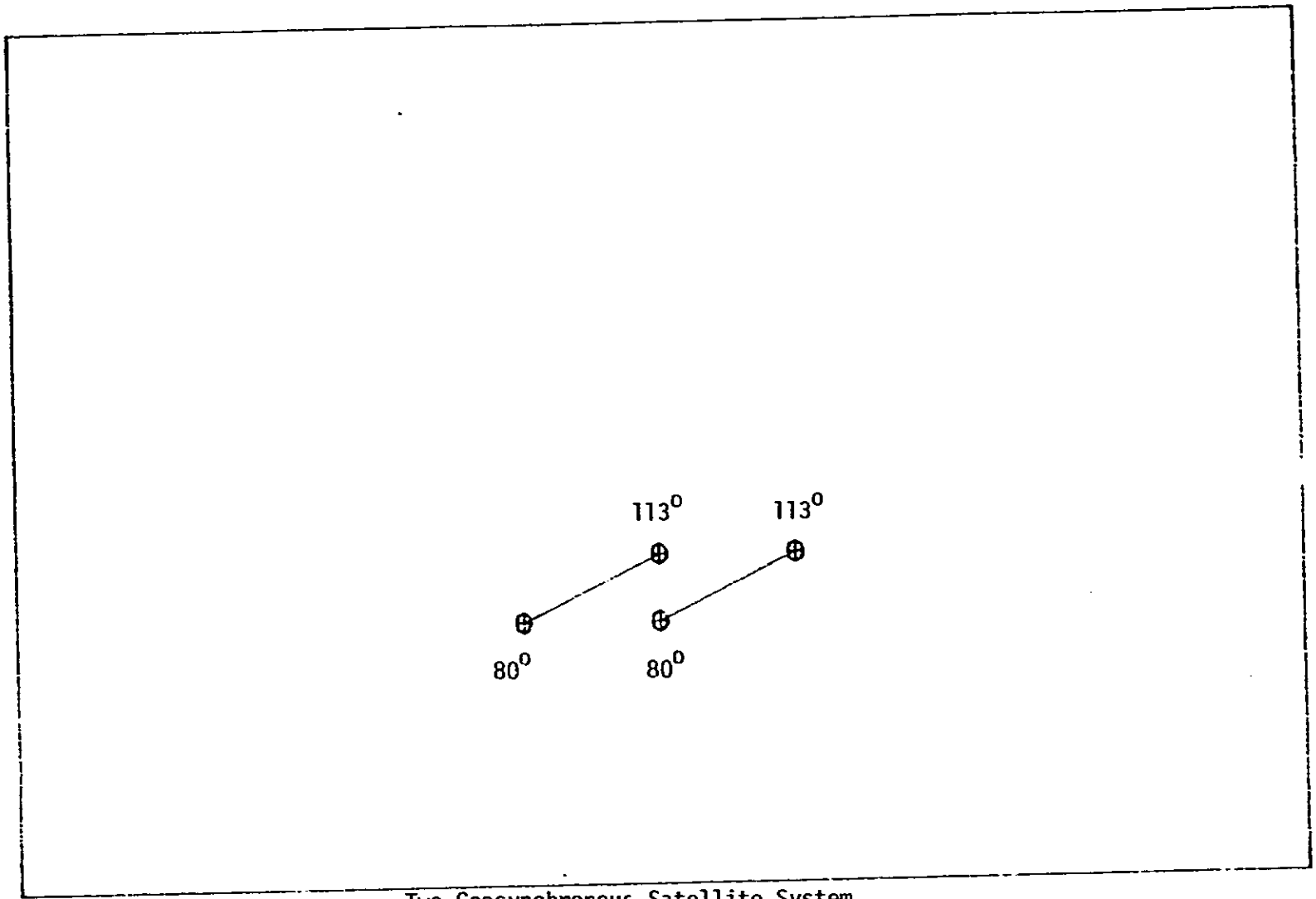

Two Geosynchronous Satellite System
Located at 80° & 113° West Longitude

WASHINGTON

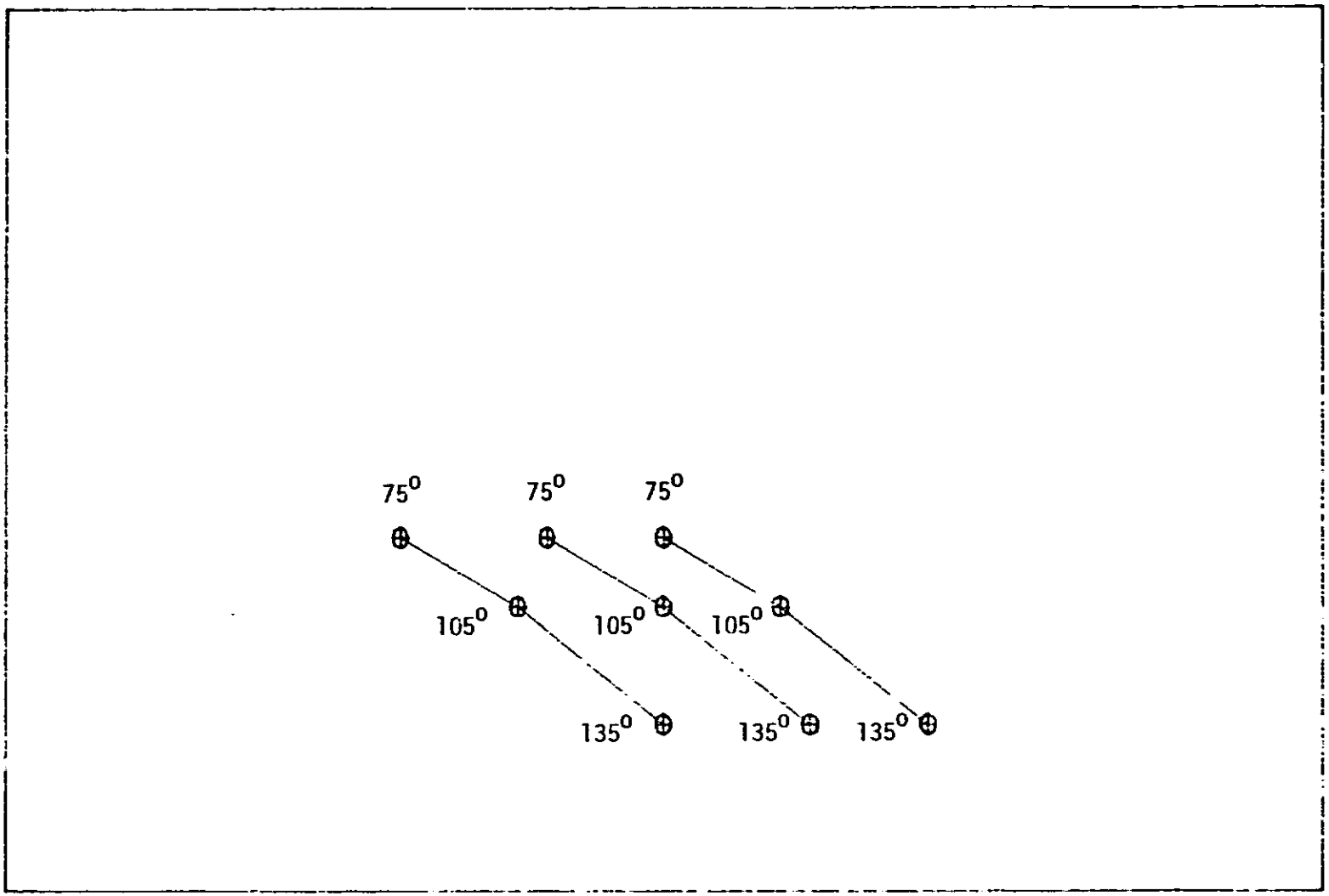

Three Geosynchronous Satellite System
Located at 75°, 105°, and 135° West Longitude

CALIFORNIA

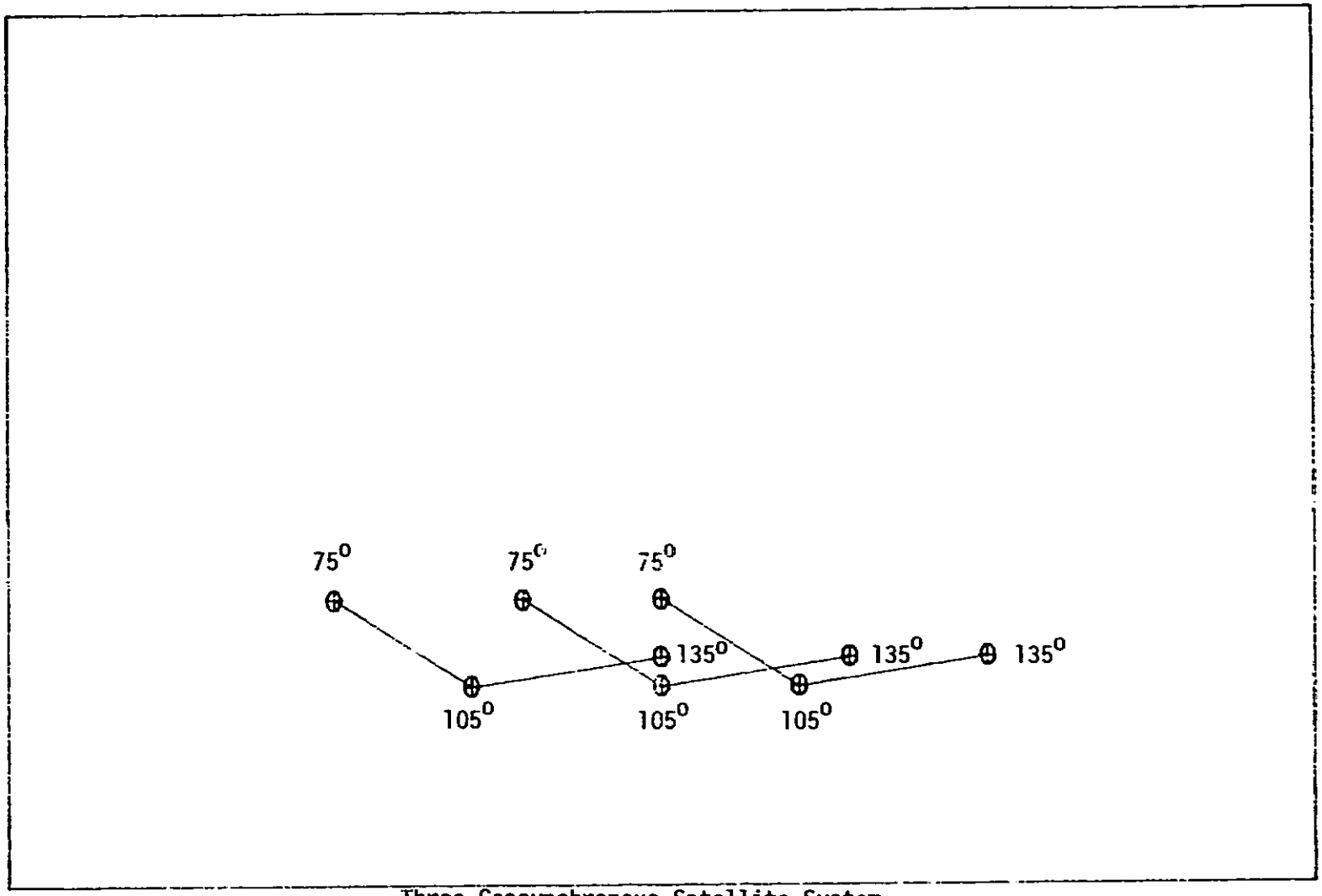

Three Geosynchronous Satellite System
Located at 75°, 105°, and 135° West Longitude

TEXAS

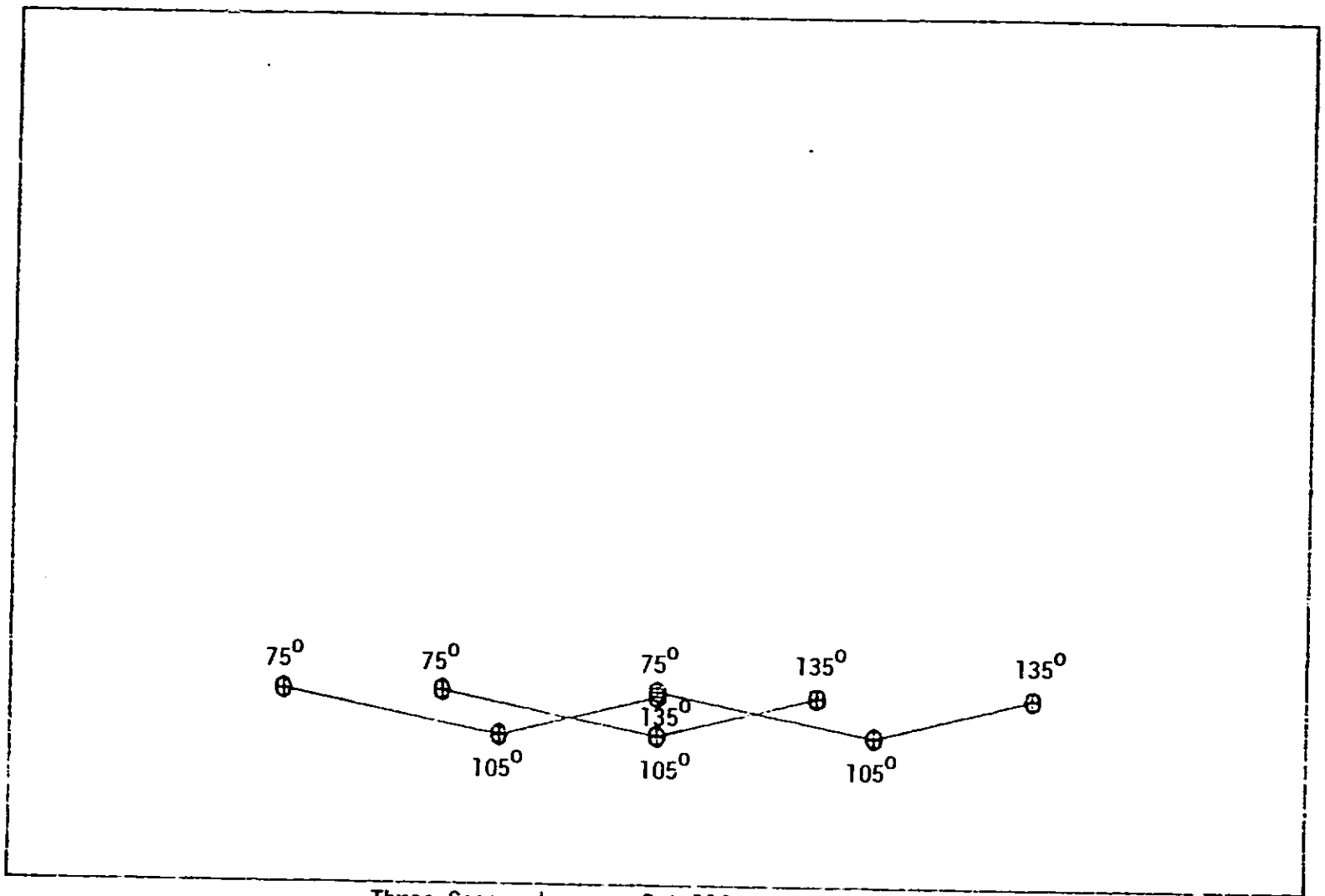

Three Geosynchronous Satellite System
Located at 75°, 105°, & 135° West Longitude

FLORIDA

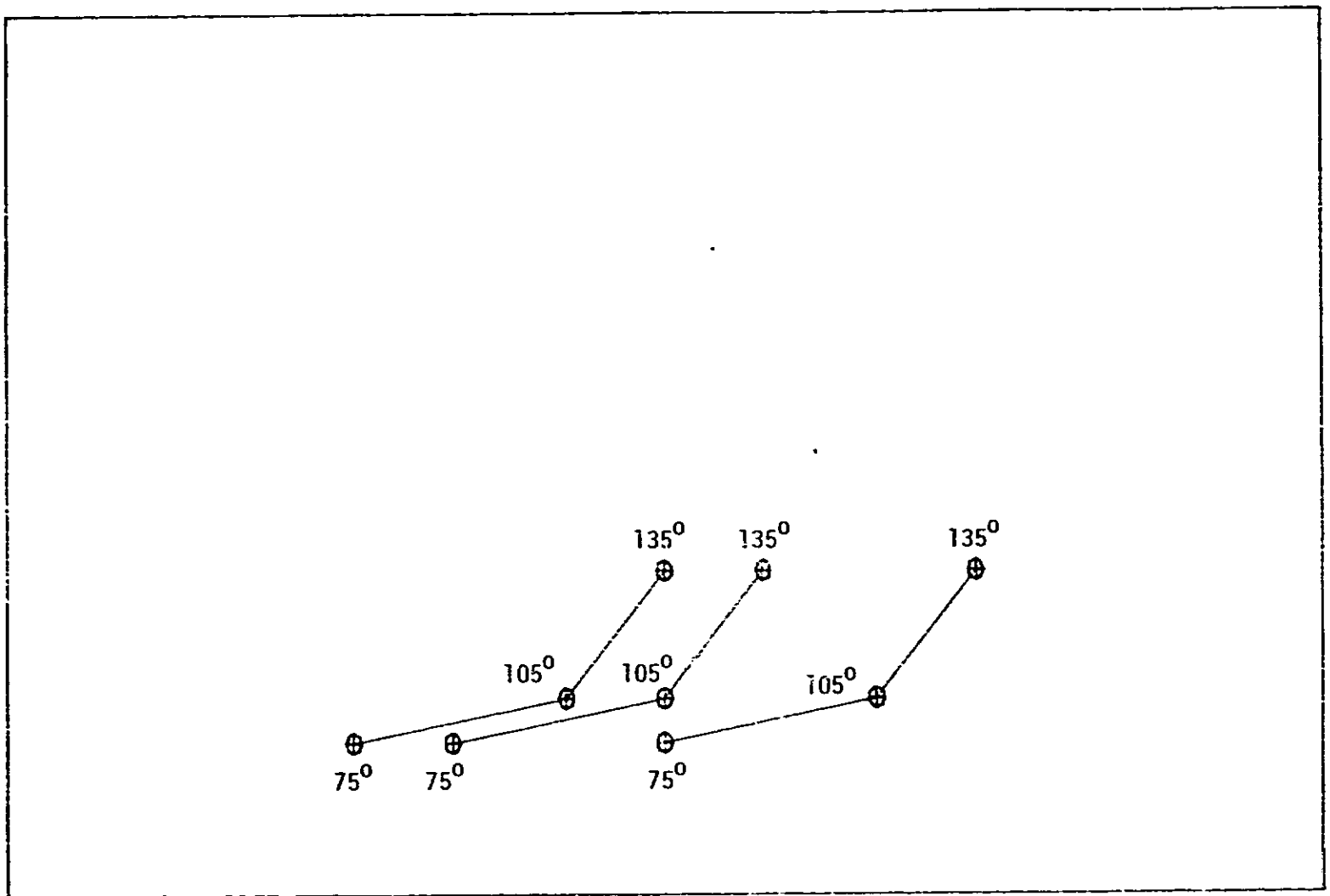

Three Geosynchronous Satellite System
Located at 75°, 105°, & 135° West Longitude

END DATE JUL 10, 1985

MAINE

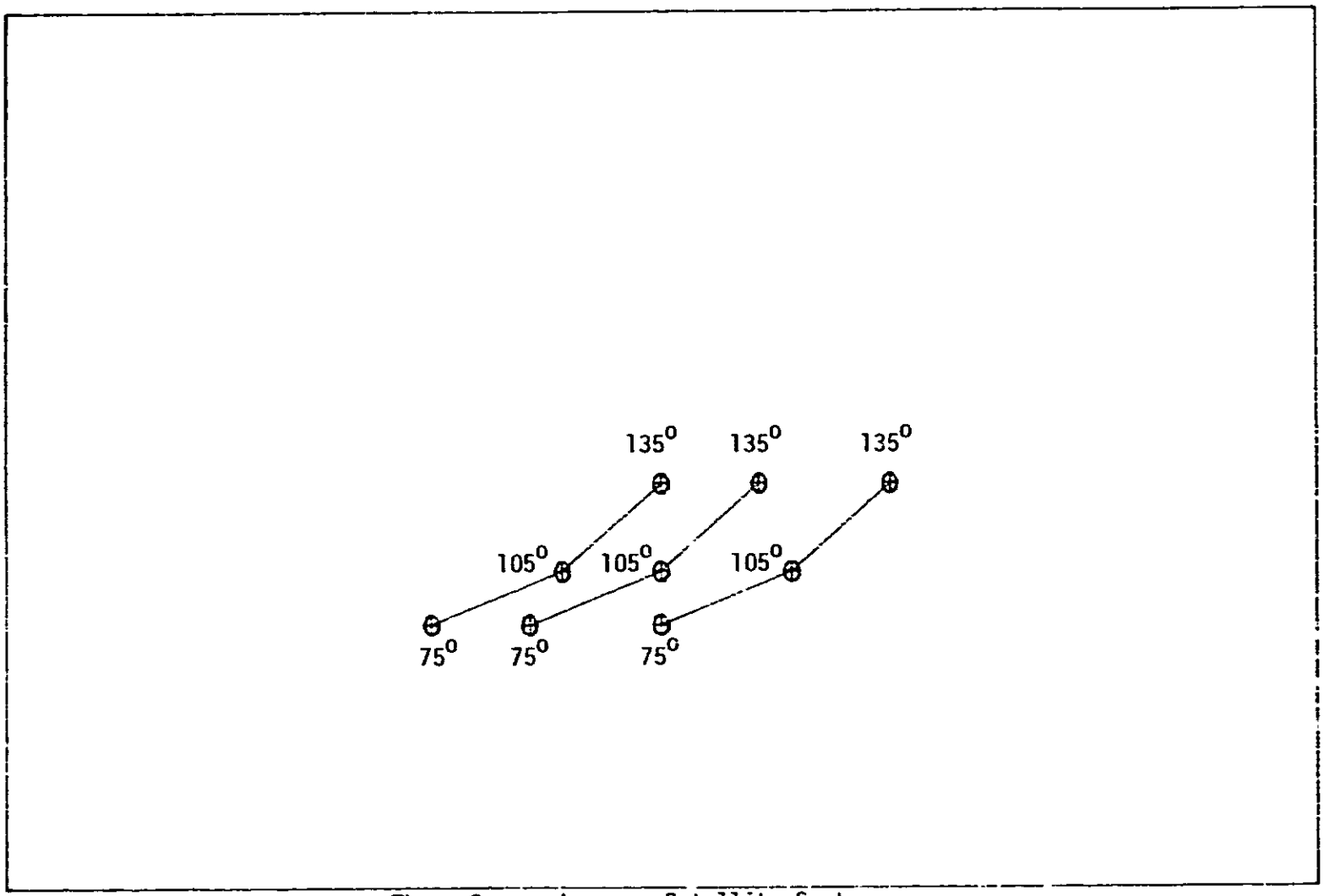

Three Geosynchronous Satellite System
Located at 75°, 105°, & 135° West Longitude