General Disclaimer

One or more of the Following Statements may affect this Document

- This document has been reproduced from the best copy furnished by the organizational source. It is being released in the interest of making available as much information as possible.

- This document may contain data, which exceeds the sheet parameters. It was furnished in this condition by the organizational source and is the best copy available.

- This document may contain tone-on-tone or color graphs, charts and/or pictures, which have been reproduced in black and white.

- This document is paginated as submitted by the original source.

- Portions of this document are not fully legible due to the historical nature of some of the material. However, it is the best reproduction available from the original submission.

Produced by the NASA Center for Aerospace Information (CASI)

NASA Technical Memorandum 87007

(NASA-TM-87007) EFFECTS OF WEAR ON STRUCTURE-SENSITIVE MAGNETIC PROPERTIES OF CERAMIC FERRITE IN CONTACT WITH MAGNETIC TAPE (NASA) 26 p HC A03/MF A01 CSCL 11G N85-26991
Unclas
G3/27 21261

Effects of Wear on Structure-Sensitive Magnetic Properties of Ceramic Ferrite in Contact with Magnetic Tape

Kazuhisa Miyoshi and Donald H. Buckley
Lewis Research Center
Cleveland, Ohio

and

Kyuichiro Tanaka
Kanazawa University
Kanazawa, Japan

Prepared for the
Tribology Conference
cosponsored by the American Society of Lubrication Engineers
and the American Society of Mechanical Engineers
Atlanta, Georgia, October 8-10, 1985

JUN 1985
RECEIVED
NASA STI FACILITY
ACCESS DEPT.

NASA

EFFECT OF WEAR ON STRUCTURE-SENSITIVE MAGNETIC PROPERTIES OF CERAMIC FERRITE IN CONTACT WITH MAGNETIC TAPE

Kazuhisa Miyoshi and Donald H. Buckley
National Aeronautics and Space Administration
Lewis Research Center
Cleveland, Ohio 44135

and

Kyuichiro Tanaka
Kanazawa University, 2-40-20, Kodatsuno,
Kanazawa, Japan

E-2483

ABSTRACT

Wear experiments and electron microscopy and diffraction studies were conducted to examine the wear and deformed layers in single-crystal Mn-Zn (ceramic) ferrite magnetic head material in contact with magnetic tape and the effects of that contact on magnetic properties. The crystalline state of the single-crystal magnetic head was changed drastically during the sliding process. A nearly amorphous structure was produced on its wear surface. Deformation in the surficial layer of the magnetic head was a critical factor in readback signal loss above 2.5 dB. The signal output level was reduced as applied normal load was increased. Considerable plastic flow occurred on the magnetic tape surface with sliding, and the signal loss due to the tape wear was approximately 1 dB.

INTRODUCTION

NASA will conduct scientific experiments through 1995 on shuttle flights and will build a chemical research laboratory aboard the agency's planned space station scheduled for the early 1990's. Some of the experiments will involve basic organic, or carbon-based, chemistry research for thinner, more durable magnetic tapes and defect-free crystals to meet critical needs in the computer and communications industries.

NASA Lewis Research Center has expended considerable effort in tribological studies of the adhesion, friction, and wear of newly developed magnetic tapes as well as commercially available magnetic tapes in contact with ceramic ferrites (Refs. 1 to 11). A fundamental understanding of the tribology and mechanics of the magnetic head-tape interface is crucial for the future of the magnetic recording industry. In most magnetic recording and playback devices, a magnetic head (slider) records by sliding or intermittent contact with a magnetic tape to achieve high density and high resolution. Only slight wear of the magnetic head and tape may render the recording process unreliable. The magnetic head and tape must therefore have good wear resistance and low friction.

Furthermore the mechanical sliding or intermittent contact frequently develops deformed layers on the surfaces (Refs. 12 to 14). The deformed layers seriously affect the magnetic and electrical properties of the materials. Structure-sensitive magnetic properties (permeability, coercivity, and loss factor) usually reach their worst values in the deformed layer. These deformed layers produce a signal loss in the short-wavelength output of practical recording systems. However, a limited amount of systematic fundamental research has been conducted to determine the influence of deformed layers on adhesion, friction, and wear as well as their role in the dynamic recording/readback (playback) process of recording systems (Ref. 12).

This investigation was conducted to examine the wear and deformed layers in single-crystal Mn-Zn ferrite (ceramic) magnetic heads and magnetic tapes and to determine the effect of wear on their magnetic properties.

MATERIALS

The single-crystal Mn-Zn ferrite (69.8 wt % Fe_2O_3, 22.6 wt % MnO, and 7.6 wt % ZnO), an as-grown crystal, is a ceramic semiconductor. In Mn-Zn ferrites the {110} planes in the ⟨100⟩ direction exhibit the greatest

hardness (Ref. 4). Therefore the magnetic head was oriented with its Mn-Zn ferrite {110} surface nearly parallel to the sliding interface and its {100} surface perpendicular to the sliding direction (Fig. 1(a)). The orientation was determined with the back-reflection Laue method. The {100} and {110} surfaces were oriented to an accuracy of ±1°. The magnetic gap was 115 μm wide, the width of the recorded track, and 0.7 μm long.

The magnetic tape used in this investigation had a layered structure (Fig. 1(b)): a magnetic layer of γ-Fe_2O_3 powder, binder, and lubricant; and a polymer-base film (polyethylene terephthalate) backing. It was 23 μm thick and 12.7 mm wide. The two tapes used in this investigation differed in the binder and lubricant material.

APPARATUS

The apparatus used in this investigation was a modified commercial two-head, helical-scan video tape recording system (Fig. 2 (Ref. 15)). The two video heads were exactly opposite each other on the drum. A measurement microscope and a tape-tension-measuring device were mounted in the system. The measurement microscope measured the head displacement from the drum surface and the head wear and provided a surface profile of the head.

The 12.7-mm-wide magnetic tape was wound around the drum at a 190° wrap angle and traveled helically at 0.19 m/s at an angle of 2°50' on the drum surface. The tape tension was controlled by a tension arm. The final tape tension was three times greater than the initial tape tension. The tape tension was used to vary the normal load applied to the head-tape contact.

The normal load could also be controlled by displacing the head radially from the drum surface (Fig. 2(b)). The applied load and friction force were proportional to the tape tension and the amount of head displacement to displacements of 150 μm. At displacements above 150 μm the tension increased at a slightly higher rate with further increases in head displacement.

The head rotated in the opposite direction to tape travel. The head speed was 11 m/s.

EXPERIMENTAL PROCEDURE

Sliding Friction Experiments

Two sets of experiments were conducted with magnetic tapes in sliding contact with magnetic heads. In the first set of experiments both the head and the tape were in motion, that is, the head rotated at 11 m/s opposite to the direction in which the tape traveled at 0.19 m/s. In the second set of experiments the head moved at 11 m/s, but the tape was stationary. All experiments were conducted in laboratory air at room temperature.

Surface Contour and Wear Measurement

An optical interference microscope was used to examine the end-view contour (A-A) of the sliding surface of the magnetic head (Fig. 3). The side-view contour (B-B) and wear measurement of the magnetic head were determined as follows (Fig. 3): An optical microscope was used to examine the side of the magnetic head and to photograph it at a magnification of 600 before and after the sliding friction experiments. Small scratches or dents on the side of the magnetic head were used as standard markers. Lines parallel to the front end, the rear end, or the magnetic gap of the head and extending through the standard markers were drawn on the photomicrographs. The distances between the standard markers and the sliding surface of the magnetic head (X_1, X_2, X_3, ..., X_{n-1}, X_n) were then measured. The amount of wear reported herein was obtained by averaging the distance X_1 to X_n from seven or eight measurements.

Signal-Output Level

The effect of wear on the electrical characteristics of magnetic head-tape contacts in the recording system was examined by using the experimental setup illustrated in Fig. 4. First, a string of alternating sine waves with a

nonfrequency-modulated 3-MHz signal at a recording current of 60 mA was supplied and recorded on the magnetic tape via the magnetic head. The signal was then read back via the magnetic head. The readback signal was amplified 8 and 500 times through a built-in rotary transformer and preamplifier, respectively. The readback signals were monitored by an oscilloscope at a sweep speed of 2 ms/cm and at a sensitivity of 0.02 V/cm during the sliding friction experiments. Readback signal levels (in decibels) during sliding were defined by $D = 20 \log (G_n/G_1)$, where G_1 is the standard readback signal (in volts) and G_n is an arbitrary readback signal (in volts).

RESULTS AND DISCUSSION

Friction Between Head and Tape

Sliding friction experiments were conducted with a magnetic tape in contact with a magnetic head at an initial tape tension of 1.25 N and at a head displacement of 122 μm in laboratory air. Although the friction force increased linearly as the tape tension or the head displacement increased, it was of the order of 0.01 N. That is, the friction force was directly proportional to the normal load applied to the magnetic head and tape. The coefficient of friction was approximately 0.22.

Tape Wear

Sliding friction experiments were conducted to examine the tape wear behavior with a magnetic head at an initial tape tension of 0.49 N and a head displacement of 168 μm in laboratory air. Sliding action produced visible wear tracks on the magnetic tapes. Scanning electron photomicrographs were taken of the as-received surfaces of the tapes (tapes 1 and 2) and of the wear tracks on the tapes (Fig. 5). The head passed the same track on each tape 18 000 times; the tapes were stationary.

The as-received surfaces of tapes 1 and 2 were similar, but their wear tracks were quite different. The scanning electron photomicrographs clearly

reveal some plastic flow of binder on tape 1 but considerable flow on tape 2. The wear track of tape 2 consisted primarily of the binder, which flowed over the magnetic particles. The nature of the binder and the lubricant obviously control the plastic flow behavior of the magnetic tape (Ref. 10). Plastic flow of the binder and lubricant can affect wear and cause a signal loss in the recording/playback process. These subjects are discussed later.

Head Wear

Composed largely of oxide particles, the magnetic coating layer of magnetic tape bears a certain resemblance to emery, a familiar abrasive (Fig. 5). Therefore the sliding of a magnetic tape on a ferrite head abrades the ferrite (Ref. 4).

The wear of the magnetic head was linearly proportional to the sliding distance and to the head displacement. The specific wear rate, defined as the wear volume of ferrite removed in an unit distance of sliding at an unit normal load applied to the head, was of the order of 10^{-7} to 10^{-8} $mm^3/N\ m$. The specific wear rate for the magnetic head in contact with tape 1 was seven times greater than that with tape 2. In other words, tape 2 was less abrasive than tape 1. The low abrasiveness of tape 2 was related to the ability of the binder to flow, as anticipated. The binder of tape 2 flowed easily and covered the oxide particles during sliding.

The wear surface of the ferrite head revealed a large number of plastically deformed grooves formed primarily by the plowing action of the oxide particles held in the magnetic tape (Ref. 14). The grooves were formed in the sliding direction of the head. The width of these grooves was almost the same as the diameter of the oxide particles (<0.1 μm).

To investigate the crystalline state of the wear surface of the magnetic head, reflection electron diffraction patterns (Fig. 6) were obtained from the wear surface and the etched surfaces. The etching was done with hydrochloric

acid at 50±1 °C. The initial tape tension was 0.2 N, and the sliding distance was 60 km. The broad arc in electron diffraction pattern of the wear surface indicated formation of a nearly amorphous surface during sliding. The surface etched to depth of 0.1 μm from the wear surface had an enlarged streak spot pattern. The streaking indicated a large amount of plastic deformation. Line defects can cause streaking in diffraction patterns. The surface etched to a depth of 0.3 μm had a relatively sharp spot pattern without streaking. Furthermore the surface etched to a depth of 0.6 μm had Kikuchi lines, consisting of pairs of black and white parallel lines, which are an indication of the bulk crystalline structure of the ferrite head.

Since the magnetic tape was thin and flexible, the contour of the wear surface of the magnetic head was affected by tape tension and head displacement. End-view contours of the wear surfaces of magnetic heads at the magnetic gap (Fig. 7) were determined with an optical interference microscope. The contours were measured from interference fringes on the photomicrographs at a magnification of 600. The as-polished magnetic head with a lapping tape (Al_2O_3, number 2000) contacted magnetic tape 1 at an initial tape tension of 0.64 N for a total sliding distance of 550 km. Both the magnetic head and the magnetic tape were in motion. Figure 7 clearly reveals that the radius of curvature of the wear surface decreased with increasing head displacement.

In wear experiments to determine the side-view contours, the as-polished magnetic head with a lapping tape (Al_2O_3, number 2000) contacted magnetic tape 1 at a tape tension of 0.64 N for a total sliding distance of 970 km. Both the magnetic head and the magnetic tape were in motion. Figure 8 clearly indicates that much more ferrite was removed from the front sliding surface area of the head than from the rear. Higher contact pressure was applied to

the front than to the rear. Therefore the contour of the wear surface reflects the pressure distribution on the sliding surface.

Effect of Wear on Magnetic Signals

The wear experiments described in the preceding sections did not consider the effect of wear on the recording process. To determine signal losses related to tape and head wear, the following experiments were conducted.

Tape wear - First, the magnetic head was run against magnetic tape 1 with a desired initial tape tension and head displacement for ~40 km. The sliding surface of the head conformed well to the magnetic tape, and it had a properly developed deformed layer. Then the tape was replaced with a new recorded tape (11 m long), and the signal was read back with the magnetic head at the desired initial tape tension and head displacement.

The standard readback signal G_1 was taken at the first 500 sliding passes of the head over the recorded track of the new tape. Signals were also read back continuously during multipass sliding of the head over the same track on the tape. The tape was stationary. The signal amplitude decreased with repeated passes of the head over the same track (Fig. 9). The signal loss increased with increasing head displacement (Fig. 9(a)). Tape tension, however, had almost no effect on signal loss (Fig. 9(b)). The reduction of signal output level was due to the tape wear discussed earlier. The deformed layer and the contours of the magnetic head did not vary markedly during multipass sliding on the recorded tape.

Experiments were then conducted to determine readback signals as a function of the number of repeated passes of the recording tape. Both the recording tape and the magnetic head were in motion. The signal losses increased with the first few passes but became constant after five passes (Fig. 10). Tape tension and head displacement had almost no effect on signal loss. Again the signal losses were primarily due to medium wear.

Head wear - To determine the effect of head wear on signal losses, the magnetic head was run against magnetic tape 1 with a desired tape tension and head displacement for a sliding distance of 60 km. The sliding surface of the magnetic head conformed to the magnetic tape, but the head had a deformed layer, as mentioned earlier. The sliding surface of the magnetic head was therefore etched to a depth of approximately 0.1 μm in order to remove the residual deformed surficial layer from the wear surface. A new recorded tape (11 m long) was then run and the standard signal G_1 was read back. The nonrecorded tape (230 m long) was repeatedly traveling, approximately 20 times its length, for a total sliding distance of 140 km. The head displacement was 198 μm and the initial tape tension was 0.20 N. During the sliding experiment the 11-m-long recorded tape was replaced several times. It was played back and forth in order to read back signals G_n at various stages of the experiment. The results are presented in Fig. 11.

The readback signal amplitude decreased rapidly as the sliding distance increased to approximately 40 km (Fig. 11). It remained low and constant after 40 km. The development of a deformed layer and tape wear were the primary factors controlling signal loss. The signal losses due to the tape wear estimated from Fig. 10 were 1 dB or less, as indicated in Fig. 11. On the other hand, the signal losses due to deformation in the surficial layer of the magnetic head were approximately 3 dB (Fig. 11).

The signal amplitude decreased rapidly with increasing sliding distance to 60 km (Fig. 12). The signal output loss increased with increasing tape tension and head displacement, that is, with increasing the applied normal load to the head. Typical examples of electron diffraction patterns were taken of the etched surface of the magnetic head before each sliding experiment and of the wear surface of the magnetic head after 60 km of sliding at a head displacement of 198 μm and an initial tape tension of 0.20 N. The electron

diffraction patterns (Fig. 13) clearly indicate that the crystalline state of the magnetic head changed drastically during the sliding process. Sliding action developed a nearly amorphous structure in the surficial layer of the single-crystal Mn-Zn ferrite head. Thus deformation in the surficial layer of the magnetic head is a critical factor in readback signal loss above 2.5 dB.

CONCLUSIONS

The following conclusions are drawn from wear experiments and electron microscopy and diffraction studies of single-crystal Mn-Zn ferrite magnetic heads in contact with magnetic tapes:

1. The crystalline state of a single-crystal magnetic head is changed drastically during the sliding process. A nearly amorphous structure can be produced on the wear surface of a single-crystal Mn-Zn ferrite magnetic head.

2. Deformation in the surficial layer of the magnetic head is a critical factor in readback signal loss above 2.5 dB. Signal output level decreases with increasing applied normal load.

3. Considerable plastic flow occurs on a magnetic tape surface with sliding, and the signal loss due to tape wear is 1 dB or less.

REFERENCES

1. Miyoshi, K. and Buckley, D.H., "Friction and Wear of Single-Crystal and Polycrystalline Manganese-Zinc Ferrite in Contact With Various Metals," NASA TP-1059, 1977.
2. Miyoshi, K. and Buckley, D.H., "Anisotropic Friction and Wear of Single-Crystal Manganese-Zinc Ferrite in Contact with Itself," NASA TP-1339, 1978.

3. Miyoshi, K. and Buckley, D.H., "Friction and Wear of Single-Crystal Manganese-Zinc Ferrite," Wear, 66, 157-173 (1981).

4. Miyoshi, K., "Lapping of Manganese-Zinc Ferrite by Abrasive Tape," Lubr. Eng., 38, 165-172 (1982).

5. Miyoshi, K. and Buckley, D.H., "Friction and Surface Chemistry of Some Ferrous-Base Metallic Glasses," NASA TP-1991, 1982.

6. Miyoshi, K. and Buckley, D.H., "Surface Chemistry, Microstructure, and Friction Properties of Some Ferrous-Base Metallic Glasses at Temperatures to 750 °C," NASA TP-2066, 1982.

7. Miyoshi, K. and Buckley, D.H., "Sliding Induced Crystallization of Metallic Glass," NASA TP-2140, 1983.

8. Miyoshi, K. and Buckley, D.H., "X-ray Photoelectron Spectroscopy and Friction Studies of Nickel-Zinc and Manganese-Zinc Ferrites in Contact with Metals," NASA TP-2163, 1983.

9. Miyoshi, K. and Buckley, D.H., "Surface Chemistry, Friction, and Wear of Ni-Zn and Mn-Zn Ferrites in Contact with Metals," Ceram. Eng. Proc., 4, 674-693 (1983).

10. Miyoshi, K., Buckley, D.H., and Bhusham, B., "Friction and Morphology of Magnetic Tapes in Sliding Contact with Nickel-Zinc Ferrite," NASA TP-2267, 1984.

11. Miyoshi, K. and Buckley, D.H., "Water-Vapor Effects on Friction of Magnetic Tape in Contact with Nickel-Zinc Ferrite," NASA TP-2279, 1984.

12. Talke, F.E. and Su, J.L., "The Mechanism of Wear in Magnetic Recording Disk Files," Tribol. Int., 8, 15-20 (1975).

13. Hahn, F.W., Jr., "Materials Selection for Digital Recording Heads," Wear of Materials 1977, ed. by W.A. Glaeser, K.C. Ludema, and S.K. Rhee, ASME (1977) pp. 199-203.

14. Miyoshi, K. and Buckley, D.H., "Properties of Ferrites Important to Their Friction and Wear Behavior," Tribology and Mechanics of Magnetic Storage Systems, ASLE SP-16, ed. by B. Bhushan, D. Bogy, N.S. Eiss, Jr., and F.E. Talke, ASLE (1984) pp. 13-20.

15. McInnes, J., Video in Education and Training, Focal Press Ltd., New York (1980).

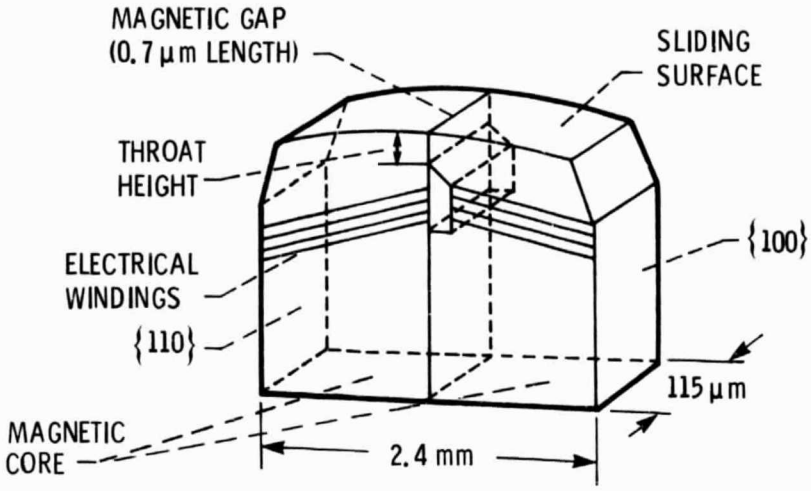

(a) Magnetic recording head (single-crystal Mn-Zn ferrite).

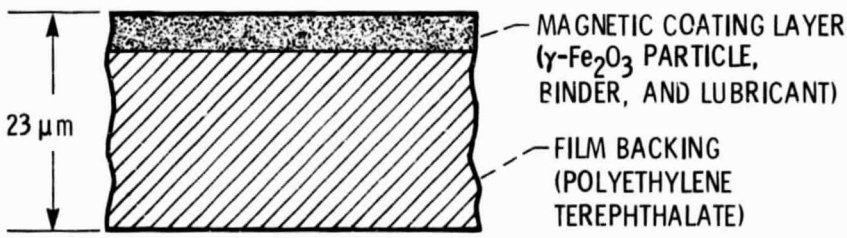

(b) Magnetic tape.

Figure 1.- Schematics of magnetic head and tape.

ORIGINAL PAGE IS
OF POOR QUALITY

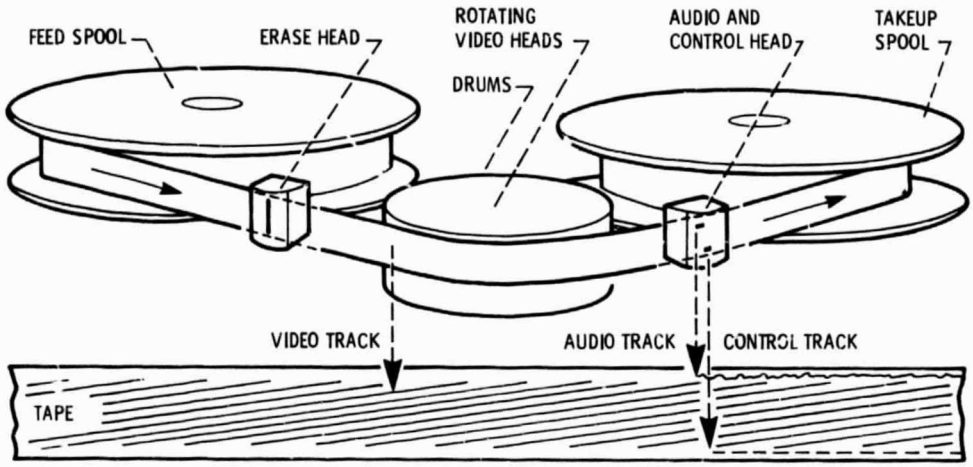

(a) Helical scan recorder.

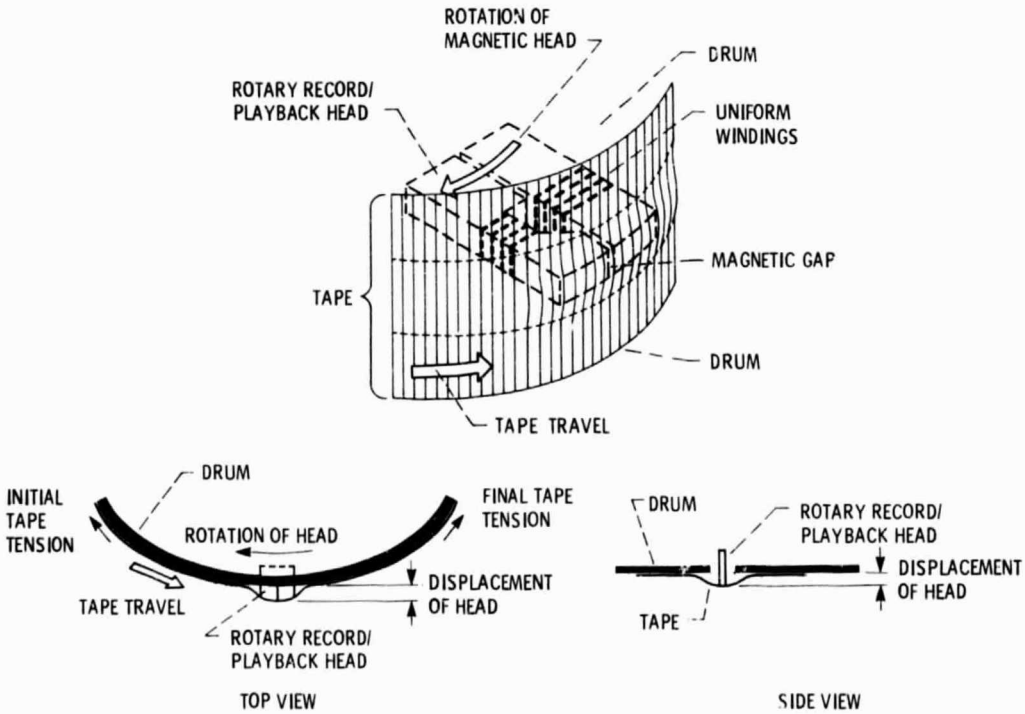

(b) Configuration of head-to-tape contact.

Figure 2. - Friction and wear apparatus.

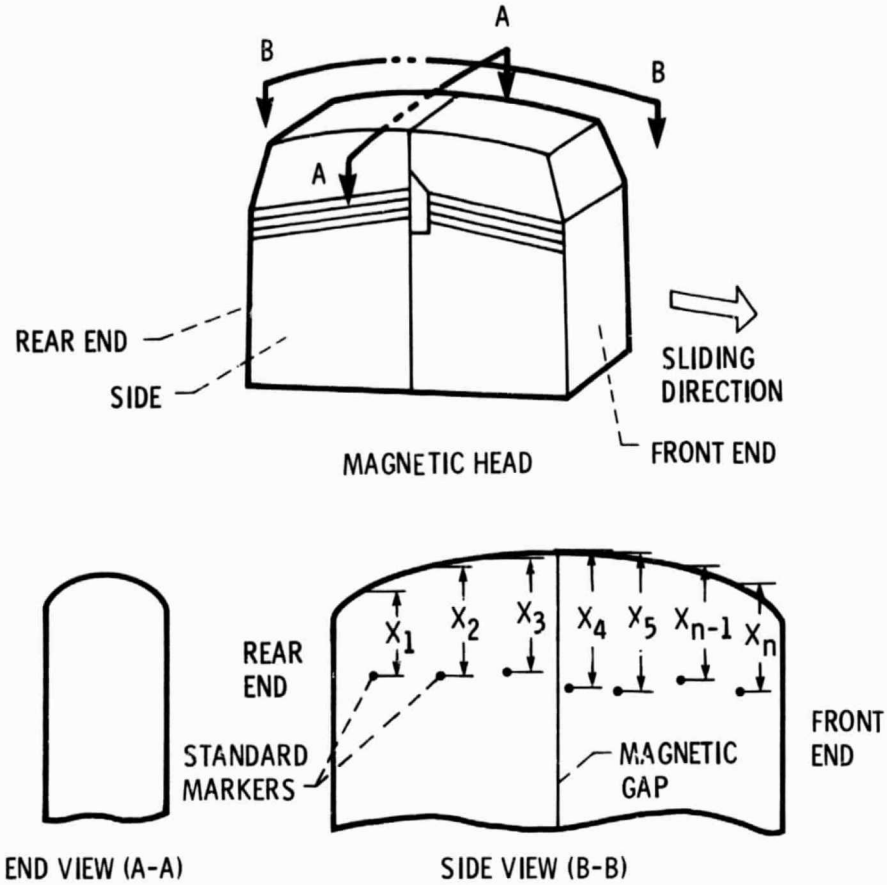

Figure 3. - Schematics of end and side views of magnetic head.

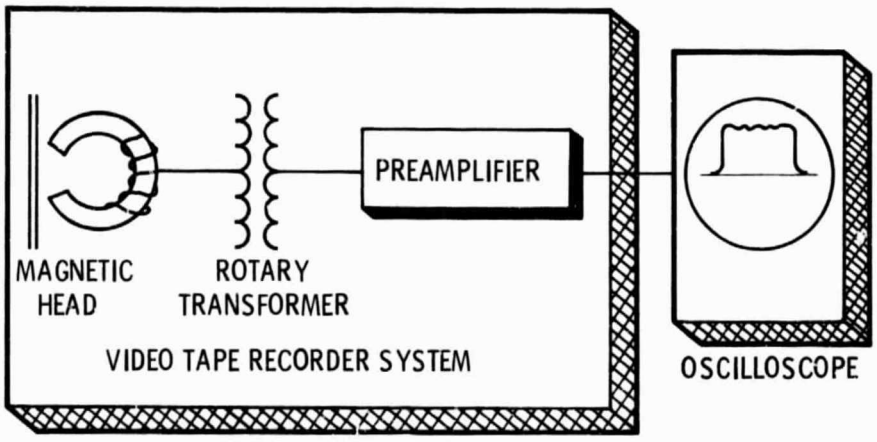

Figure 4. - Experimental setup of video tape recorder system.

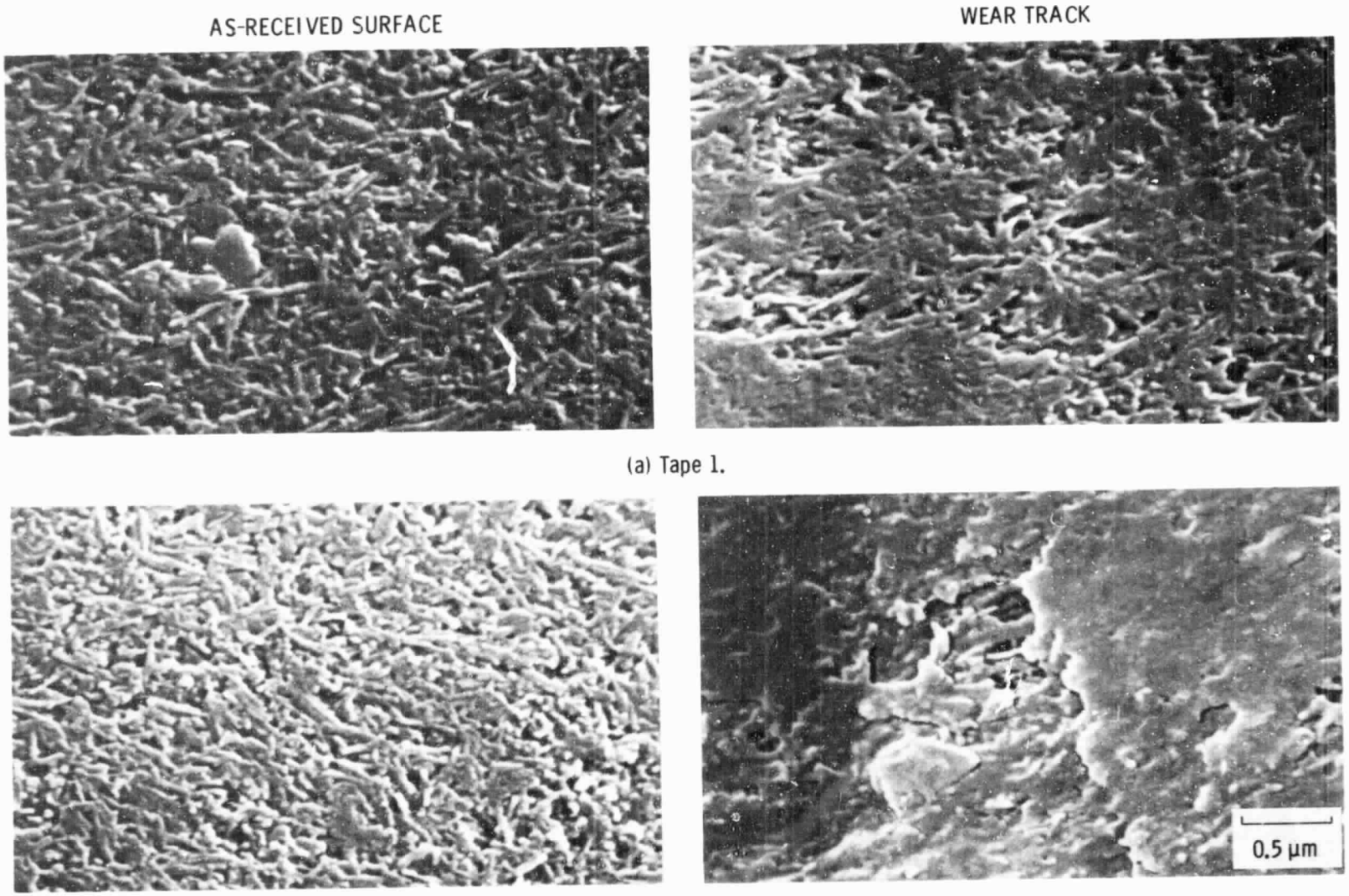

(a) Tape 1.

(b) Tape 2.

Figure 5. - Scanning electron photomicrographs of as-received surface and wear track on stationary magnetic tapes after 18 000 passes of a Mn-Zn ferrite head in sliding contact.

ORIGINAL PAGE IS
OF POOR QUALITY

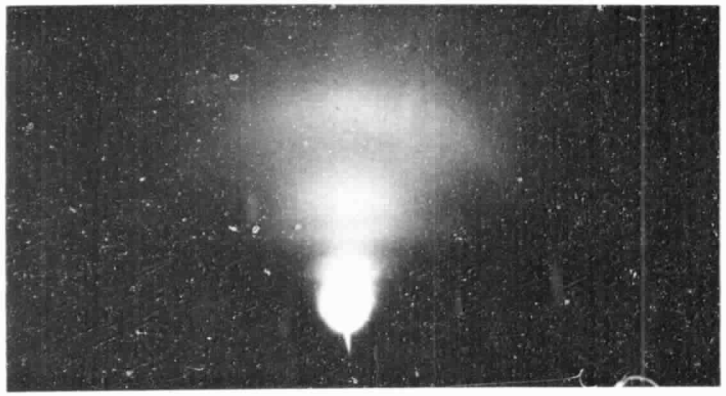

(a) Wear surface.

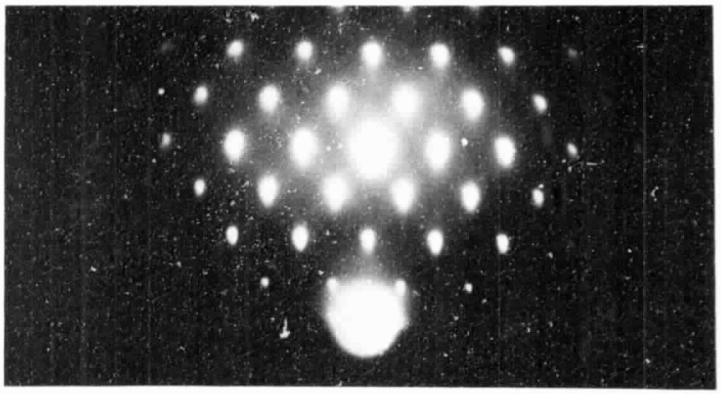

(c) Etched surface (etching depth, 0.3 μm).

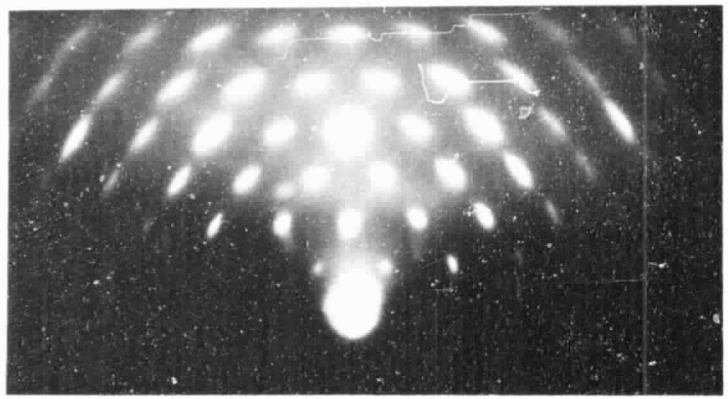

(b) Etched surface (etching depth, 0.1 μm).

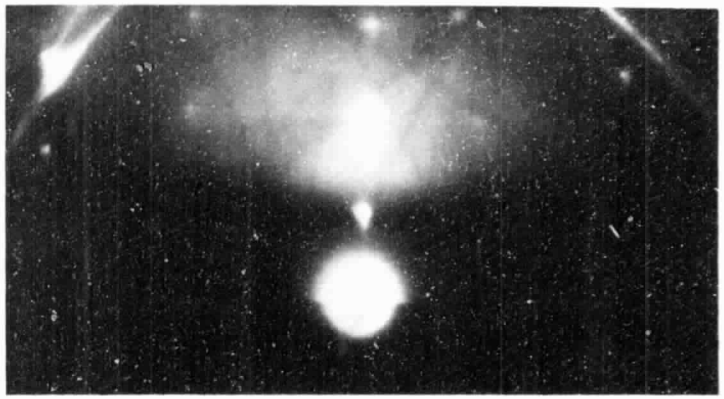

(d) Etched surface (etching depth, 0.6 μm).

Figure 6. - Wear surface of magnetic head in sliding contact with magnetic tape.

ORIGINAL PAGE IS
OF POOR QUALITY

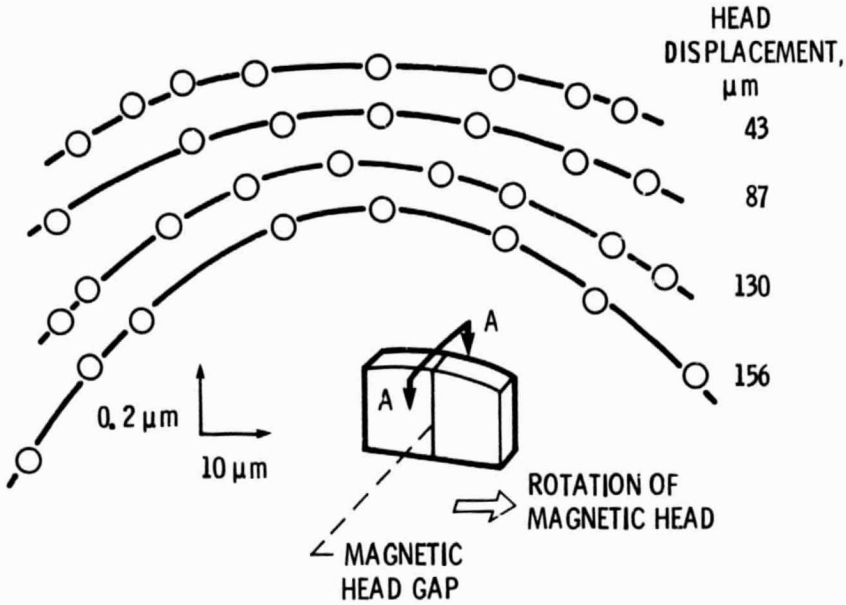

Figure 7. - End-view contours (lateral cross section A-A of wear surface of magnetic head at magnetic gap).

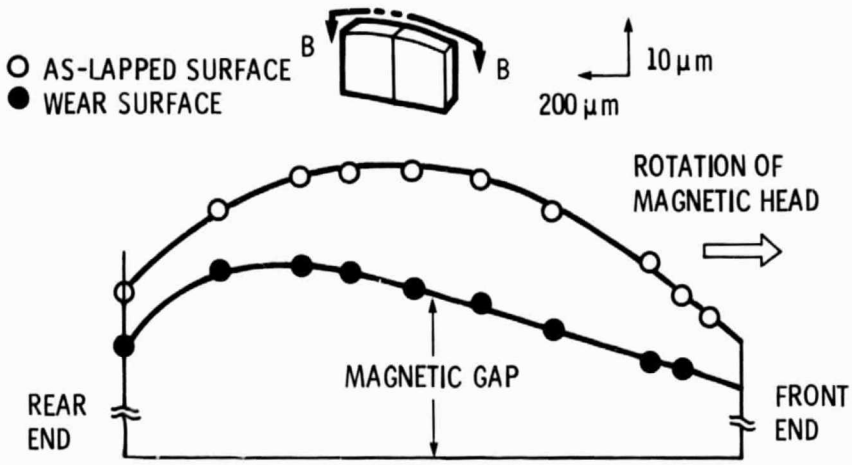

(a) Head displacement, 51 μm.

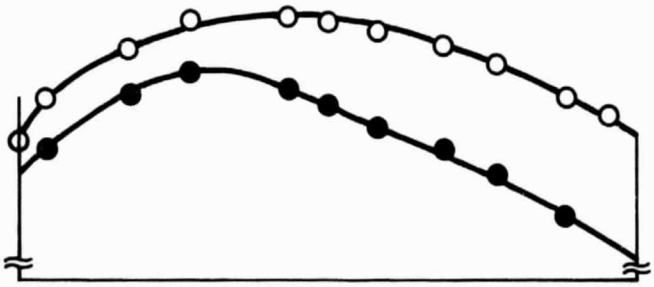

(b) Head displacement, 152 μm.

Figure 8. - Side view contours (longitudinal section B-B) of sliding surface of magnetic head.

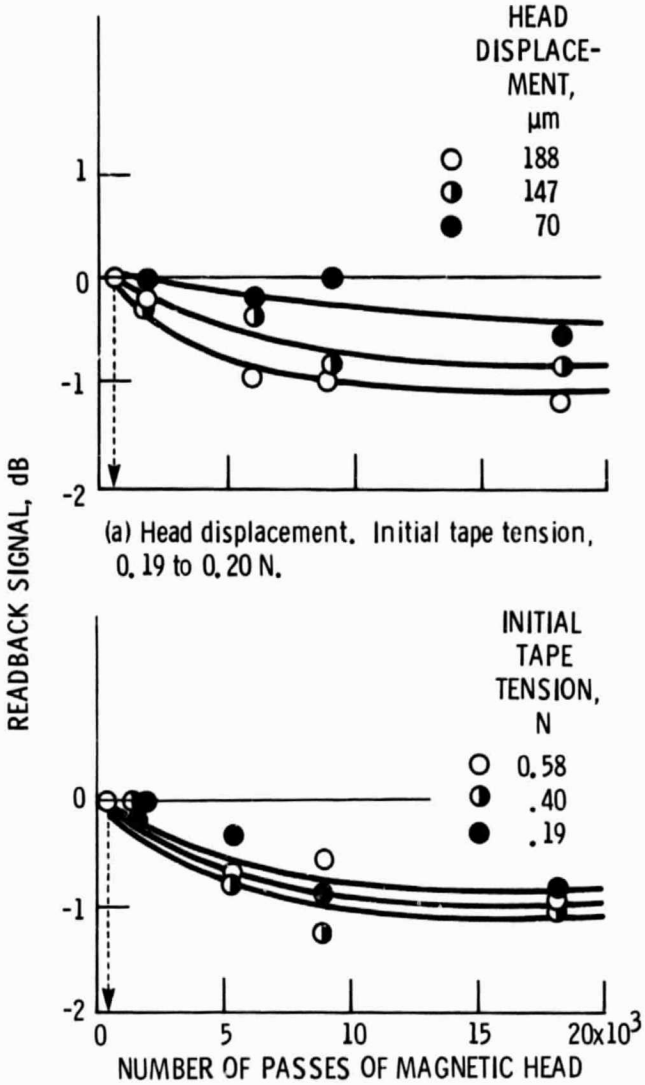

(a) Head displacement. Initial tape tension, 0.19 to 0.20 N.

(b) Tape tension. Head displacement, 147 μm.

Figure 9. - Signal output level as function of number of passes of magnetic head sliding against track on stationary magnetic tape.

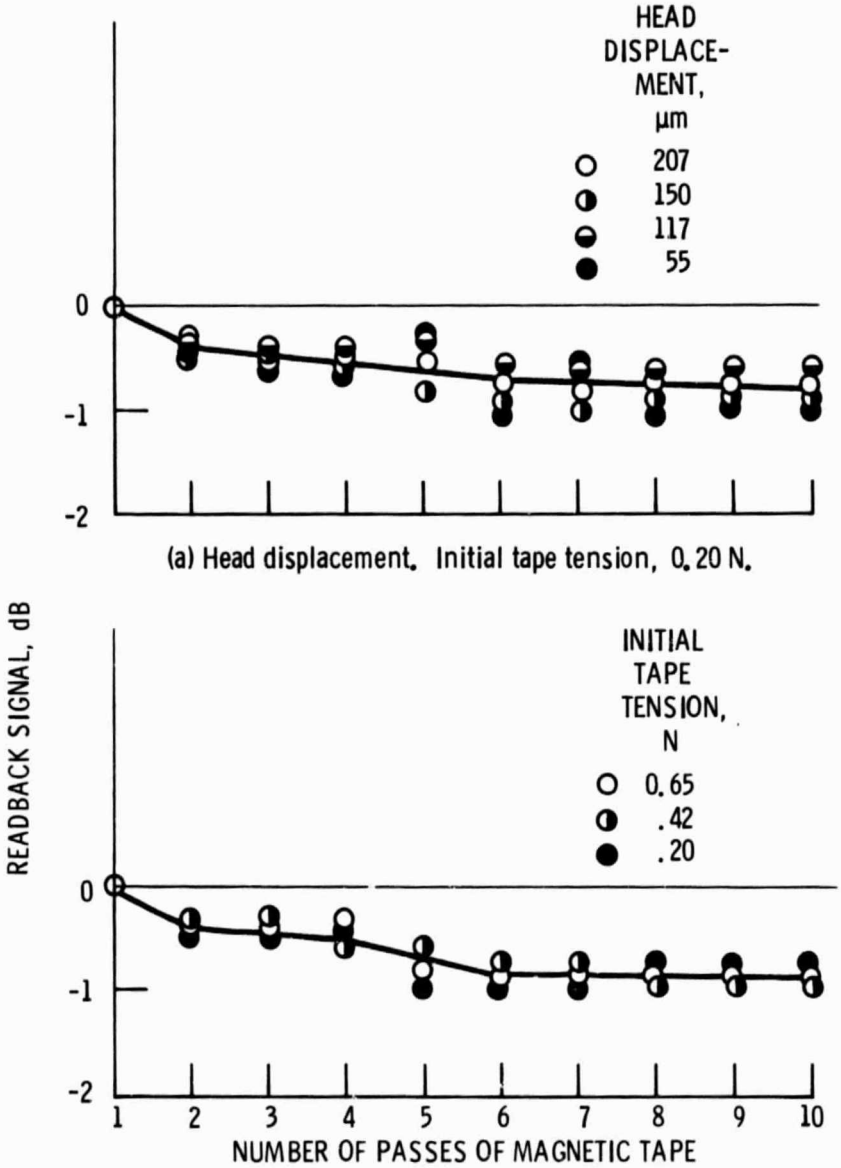

Figure 10. - Signal output level as function of number of passes of magnetic tape sliding against magnetic head.

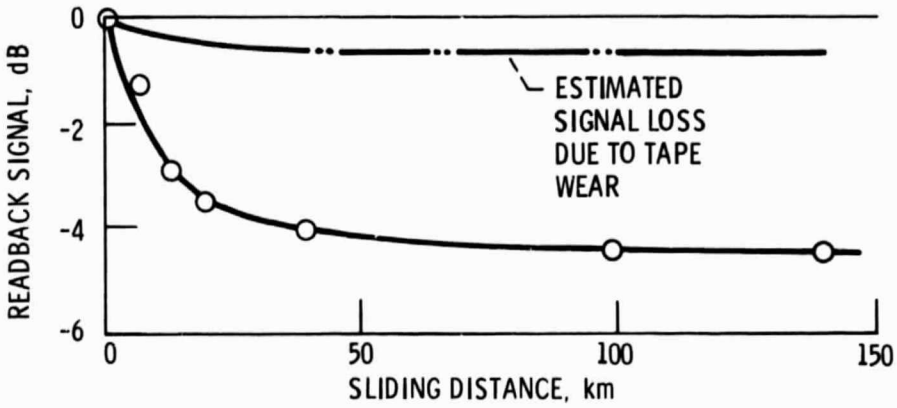

Figure 11.- Signal output level as function of sliding distance.

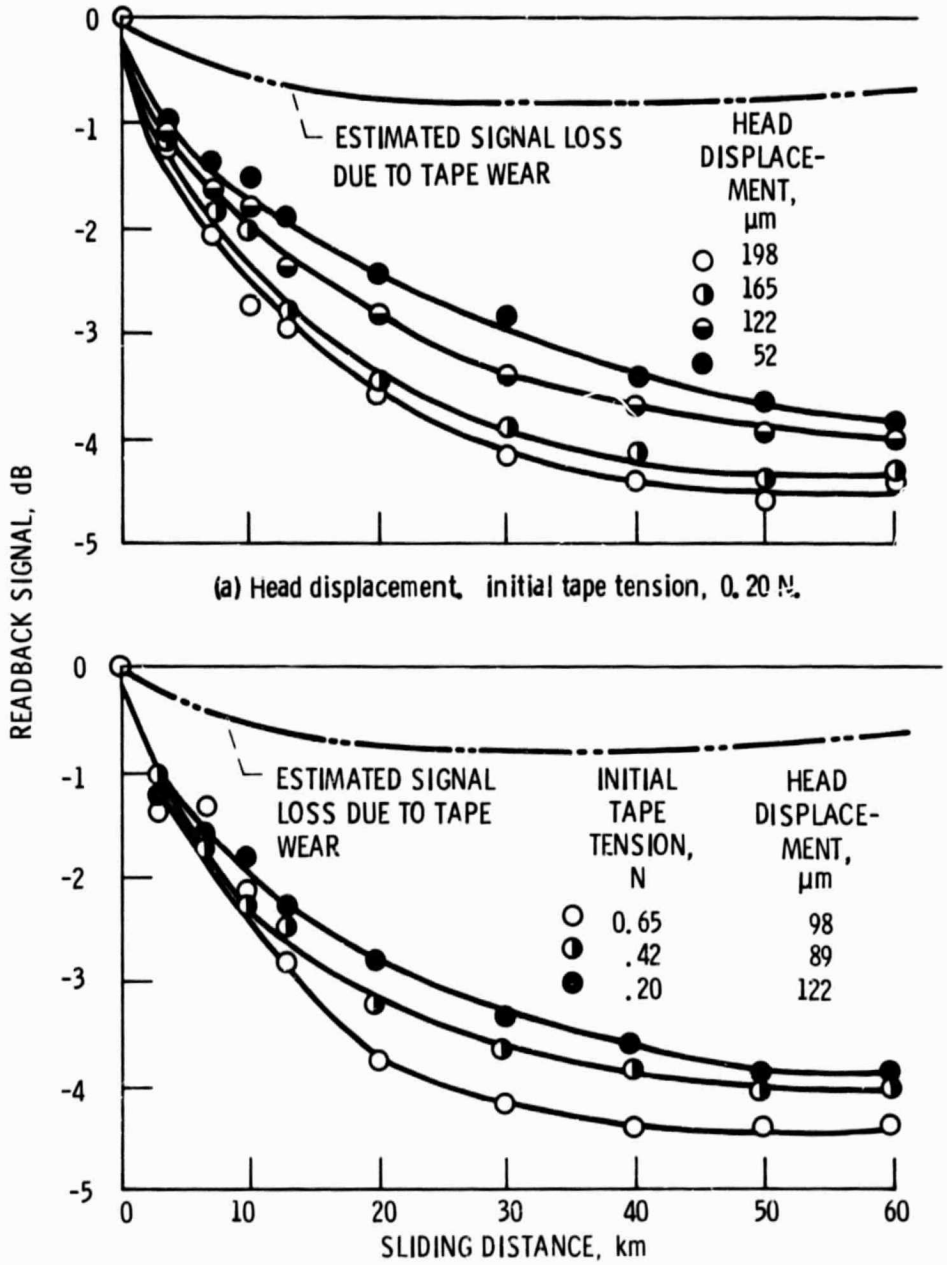

(b) Tape tension and head displacement.

Figure 12.- Effect of applied normal load on signal output level.

ORIGINAL PAGE IS
OF POOR QUALITY

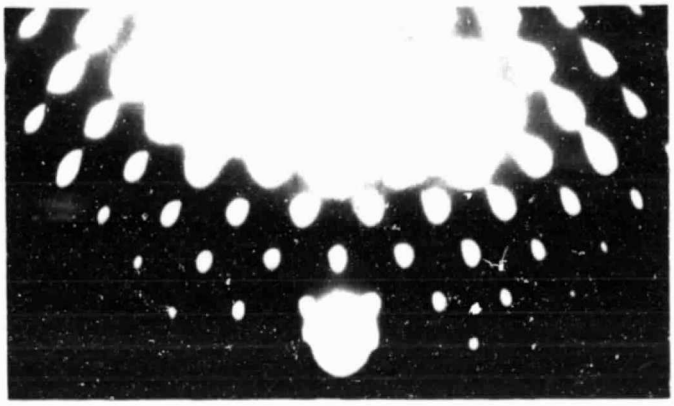

(a) As-etched surface before run.

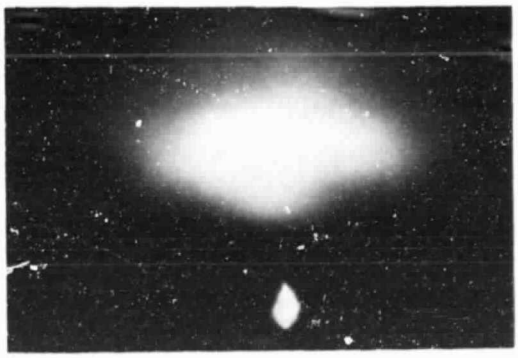

(b) Wear surface after 60-km run.

Figure 13. - As-etched surface and wear surface of magnetic head in sliding contact with magnetic tape.

1. Report No.	2. Government Accession No.	3. Recipient's Catalog No.
NASA TM-87007		

4. Title and Subtitle	5. Report Date
Effects of Wear on Structure-Sensitive Magnetic Properties of Ceramic Ferrite in Contact with Magnetic Tape	6. Performing Organization Code 506-53-1B
7. Author(s) Kazuhisa Miyoshi, Donald H. Buckley, and Kyuichiro Tanaka	8. Performing Organization Report No. E-2483
	10. Work Unit No.
9. Performing Organization Name and Address National Aeronautics and Space Administration Lewis Research Center Cleveland, Ohio 44135	11. Contract or Grant No.
	13. Type of Report and Period Covered Technical Memorandum
12. Sponsoring Agency Name and Address National Aeronautics and Space Administration Washington, D.C. 20546	14. Sponsoring Agency Code

15. Supplementary Notes

Kazuhisa Miyoshi and Donald H. Buckley, NASA Lewis Research Center; Kyuichiro Tanaka, Kanazawa University, 2-40-20 Kodatsuno, Kanazawa, Japan. Report prepared for the Tribology Conference, cosponsored by the American Society of Lubrication Engineers and the American Society of Mechanical Engineers, Atlanta, Georgia, October 8-10, 1985.

16. Abstract

Wear experiments and electron microscopy and diffraction studies were conducted to examine the wear and deformed layers in single-crystal Mn-Zn (ceramic) ferrite magnetic head material in contact with magnetic tape and the effects of that contact on magnetic properties. The crystalline state of the single-crystal magnetic head was changed drastically during the sliding process. A nearly amorphous structure was produced on its wear surface. Deformation in the surficial layer of the magnetic head was a critical factor in readback signal loss above 2.5 dB. The signal output level was reduced as applied normal load was increased. Considerable plastic flow occurred on the magnetic tape surface with sliding, and the signal loss due to the tape wear was approximately 1 dB.

17. Key Words (Suggested by Author(s))	18. Distribution Statement
Ceramic ferrite Magnetic tape Wear	Unclassified - unlimited STAR Category 27

19. Security Classif. (of this report)	20. Security Classif. (of this page)	21. No. of pages	22. Price*
Unclassified	Unclassified		

*For sale by the National Technical Information Service, Springfield, Virginia 22161