NASA TM-86718

NASA Technical Memorandum 86718

NASA-TM-86718 19850026066

NOT REFERENCE

Nonsimultaneous Coupled Laser Velocimeter Measurement Technique: Error Prediction for Spatially Noncoincident Measurements

M.S. Reinath

LIBRARY COPY

SEP 30 1985

LANGLEY RESEARCH CENTER
LIBRARY, NASA
HAMPTON, VIRGINIA

August 1985

National Aeronautics and
Space Administration

NF00005

NASA Technical Memorandum 86718

Nonsimultaneous Coupled Laser Velocimeter Measurement Technique: Error Prediction for Spatially Noncoincident Measurements

M S. Reinath, Ames Research Center, Moffett Field, California

August 1985

National Aeronautics and
Space Administration

Ames Research Center
Moffett Field, California 94035

N85-34379 #

SUMMARY

A technique for obtaining orthogonal velocity components from nonorthogonal measurements using the NASA Ames Research Center Long-Range Laser Velocimeter (LRLV) is briefly discussed. A description is then presented of the error that occurs when these nonorthogonal measurements are spatially noncoincident because of positioning inaccuracies, and equations are developed for predicting this error. Sample data are presented and a prediction of the expected error for two typical applications is made. To cover other cases in general, a parametric study is conducted and the results are presented in a tabular format.

INTRODUCTION

A laser velocimeter system is under development that has been designed for use in the 40- by 80-Foot and 80- by 120-Foot Wind Tunnels. The instrument, referred to as the Long-Range Laser Velocimeter (LRLV), performs its measurement function from within the wind tunnel test section, as shown in figure 1. The system is powered by an 18-W argon laser that is operated in the single-color mode to produce up to 9 W of power at 514.5 nm and is configured for use in the dual-beam mode of operation with coaxial backscatter receiving. Two components of velocity are measured, although not simultaneously, by rotating the single-color, dual-beam pattern through 90° using an optical-mechanical rotation device. A detailed description of the system can be found in references 1 and 2.

A technique for obtaining orthogonal velocity components from nonorthogonal measurements has been developed and is also discussed in references 1 and 2. This technique requires that a velocity measurement be made at a particular point in the flow field from two different lateral locations of the velocimeter. Two velocity components at the measurement location are thereby obtained that are, in general, not orthogonal to one another or parallel to the directions of the reference coordinate axes. A coordinate transformation technique is then used to calculate the orthogonal velocity components of interest from these coupled measurements.

The accuracy of this technique depends not only on the measurement accuracy of the velocity components themselves, magnitude as well as direction, but also on the accuracy with which the second measurement location can successfully be positioned to achieve coincidence with the first. An uncertainty in positioning which interferes with the ability to achieve this coincidence naturally affects the accuracy of

the calculated orthogonal components; the present study was undertaken to develop a method of estimating this error as a function of coincidence accuracy.

COUPLED MEASUREMENT TECHNIQUE

The technique of obtaining orthogonal velocity components from nonorthogonal measurements is presented in detail in references 1 and 2 and is described only briefly here. A velocity measurement is made at a selected point in the flow field from a particular lateral position of the LRLV, as shown in figure 2. The velocity component measured from this first location of the LRLV is denoted by the symbol V_{m_1}. This component is inclined from the horizontal by the tilt angle α_1 and lies in the measurement plane, the plane formed by the measured component itself and the optical axis of the LRLV. A second velocity component, denoted V_{m_2}, is measured from a position of the LRLV that is offset laterally from the first and also lies in the measurement plane, inclined from the horizontal by the angle α_2. The orthogonal components of interest, V and W, are obtained from these measurements using the transformations equations

$$V = \frac{V_{m_1} \sin\alpha_2 - V_{m_2} \sin\alpha_1}{\sin(\alpha_2 - \alpha_1)}$$

$$W = \frac{V_{m_1} \cos\alpha_2 - V_{m_2} \cos\alpha_1}{\cos(\alpha_2 - \alpha_1)}$$

with

$$V_{m_1} = \frac{\lambda(f_1 - f_D)}{2 \sin\beta_1/2}$$

$$V_{m_2} = \frac{\lambda(f_2 - f_d)}{2 \sin\beta_2/2}$$

where f_1 and f_2 are the Doppler frequencies measured by the LRLV; f_D is the offset frequency; and the angles α_1, α_2, β_1, and β_2 are defined in figure 2.

The statistical and systematic uncertainties associated with making this velocity transformation are discussed in the cited references. These uncertainties can be attributed to the inherent inaccuracies that are associated with measuring the parameters f_1, f_2, β_1, β_2, α_1, and α_2, and also the statistical uncertainties that are incurred owing to the sampling nature of laser-velocimeter signal processing (refs. 3 and 4).

In the uncertainty analysis of the cited references, the uncertainty contribution which arises when positioning inaccuracies occur is neglected, and perfect coincidence of the measurement locations is not achieved. The validity of the transformation technique requires that the components V_{m_1} and V_{m_2} be measured at precisely the same location in the flow, since the assumption is made that they are components of the same total-velocity vector projection in the measurement plane. This assumption is not completely correct when positioning inaccuracies interfere with the attainment of coincidence. To fully estimate the uncertainty associated with this measurement technique, it is necessary to include this contribution. Therefore, it is necessary to estimate the uncertainty that is incurred for various amounts of test-point misalignment, the distance by which the measurement locations are separated.

ERROR ANALYSIS FOR NONCOINCIDENT MEASUREMENTS

If we consider selecting a coordinate system p, q, and r, as shown in figure 3(a), where the angle ∂ defines the direction of the r-axis in the p,q plane. Then consider orienting this coordinate system such that the p,q plane is coplaner with the measurement plane, and the p-axis is aligned with the total-velocity vector projection in the measurement plane. Let the origin be designated as point 1, and let the velocity magnitude u equal unity. If a velocity measurement is made at point 1, the measured component of u is represented by the component V_{m_1} (see fig. 3(b)), the direction of which is defined by the angle γ_1.

Following the procedure for obtaining orthogonal velocity components from nonorthogonal measurements, a second velocity measurement is made, as shown in figure 4, the direction of which is defined by the angle γ_2. The location of this measurement defines the position of point 2, which is shown displaced a distance Δr from point 1 to account for the error that is incurred in achieving coincidence.

The velocity at point 2 is, in general, not equal to the velocity at point 1. This distinction is made and is shown in figure 4, where the symbols u' and θ' are used to denote the velocity magnitude and direction, respectively, at point 2.

To graphically illustrate the error that propagates to the resultant velocity for the measurements shown in figure 4, consider the diagram of figure 5(a). Shown in this figure are the velocity vectors u and u' which have been placed at a

common origin to aid in the illustration. The measured velocity components V_{m_1} and V_{m_2}' are also shown, where V_{m_1} is the measured component of the vector u, and V_{m_2}' is the measured component of the vector u'. Also shown, for the purpose of comparison, is the component V_{m_2}, which represents the measurement of velocity that would be made at point 2 for zero misalignment (point 2 coincident with point 1). Clearly illustrated is the difference between the components V_{m_2} and V_{m_2}', which is the source of the error. If the resultant velocity vector having these components is included in the diagram and denoted by the symbol u_e, as shown in figure 5(b), it does not equal the true velocity vector u, but deviates by the angle θ_e. Therefore, the error that can be attributed to the misalignment is the difference between the magnitude and the direction of the vectors u and u_e.

The misalignment error can be expressed quantitatively making use of the transformation equations, rewritten for use with the p,q-coordinate system. The error in velocity magnitude, expressed as a relative error is given by

$$\frac{\Delta u}{u} = \left(u_{e_p}^{\ 2} + u_{e_q}^{\ 2} \right)^{1/2} - 1$$

and the error in the velocity vector direction is given by

$$\theta_e = \tan^{-1} \frac{u_{e_q}}{u_{e_p}}$$

where u_{e_p} and u_{e_q} are the components of the u_e-vector along the p- and q-axes, respectively. These components are given by the equations

$$u_{e_p} = \frac{V_{m_1} \sin\gamma_2 - V_{m_2}' \sin\gamma_1}{\sin(\gamma_2 - \gamma_1)}$$

$$u_{e_q} = \frac{V_{m_2}' \cos\gamma_1 - V_{m_1} \cos\gamma_2}{\sin(\gamma_2 - \gamma_1)}$$

where the measured components V_{m_1} and V_{m_2}' and given by

$$V_{m_1} = \cos\gamma_1$$

$$V_{m_2}' = u' \cos(\gamma_2 - \theta')$$

and the values of the variables u' and θ' are given by

$$u' = 1 + \frac{\partial u}{\partial r} \Delta r$$

$$\theta' = \frac{\partial \theta}{\partial r} \Delta r$$

To use these equations to estimate the misalignment errors, $\Delta u/u$ and θ_e, for a particular value of Δr, it is necessary to estimate the values of the partial derivatives $\partial u/\partial r$ and $\partial\theta/\partial r$. These values depend not only on the choice of position in a particular flow, but also on the direction selected for the r-axis. Since a worst-case estimate of the error values is normally desired, a position and direction should be selected to maximize the values of the partial derivatives.

Notice that the angle ∂ does not appear in any of the equations. Its value is important for determining the values of the partial derivatives only and is ignored for the remainder of the calculation. This implies that any arbitrary combination of values $\partial u/\partial r$, $\partial\theta/\partial r$, and Δr that equate to values of u' that are equal and values of θ' that are equal, must also yield misalignment error values that are equal.

APPLICATION OF ERROR-PREDICTION TECHNIQUE

Flow survey measurements taken with the LRLV, using the direct measurement method rather than the coupled method, are presented in figures 6 and 7 to serve as sample data for use in the estimation of the error parameters $\Delta u/u$ and θ_e. The surveys of figure 6(a) were taken in the open-circuit exhaust flow of a one-fiftieth-scale model of the 80- by 120-Foot Wind Tunnel, while the survey shown in figure 7(a) is one of many vertical surveys taken upstream of a one-fifteenth-scale model of the 80- by 120-Foot Wind Tunnel inlet. In figure 6(b), the data of the exhaust survey taken at 0.20 m from the exit plane of the model are shown plotted as a function of survey distance. Similarly the data of inlet survey, also plotted as a function of survey distance, are shown in figure 7(b).

To proceed with the estimation of the error parameters, the values of the partial derivatives must be estimated. Since the available survey data are limited, the direction of the r-axis is chosen to coincide with the survey direction. Admittedly, this choice may not yield the absolute worst-case misalignment error for a

particular point on the survey line, but it certainly provides a usable estimate. For this choice, the partial derivatives become simply the slopes of the curves and are calculated in figures 6(b) and 7(b) at the points shown.

Presented in table 1 are misalignment errors obtained using the estimates of the partial derivatives at misalignment distances of 0.5 cm, 1 cm, and 2 cm, respectively, assuming a coupling angle of 40° and an angle γ_1 of 20°.

The values presented in this table show that, for the inlet flow, relatively large misalignment distance can be tolerated along this survey, at least at the specified coupling angle and γ_1, without incurring significant misalignment errors. For point 1 of the exhaust flow, on the other hand, the values in the table indicate that, even at the 0.5 cm misalignment distance, errors in velocity direction are quite large. Since a misalignment tolerance much less than 0.5 cm cannot be attained at the extended operating ranges of the LRLV, measurements using the coupled technique cannot successfully be made in the presence of the velocity gradient at that location in the flow. At point 2 of the exhaust flow survey, however, where the velocity and direction gradients are not quite as steep, misalignment errors are again within reasonable limits, although they are not quite as low as those for the inlet survey.

To study the behavior of the error for other values of coupling angle and γ_1, the parameters $\Delta u/u$ and θ_e are plotted versus γ_1 in figures 8(a) and 8(b) for various values of coupling angle, using the partial derivative estimates of figure 7(b) and a misalignment distance of 1 cm. Several important points should be noted. First, the misalignment errors oscillate as a function of γ_1 at a period of 180° because of the simple trigonometric functions that appear in the equations. This behavior is not surprising since, as the value of γ_1 is varied while the other parameters are held constant, only the geometry of the vector diagram changes. Secondly, distinct values of γ_1 occur at which $\Delta u/u$ and θ_e do not appear to change with coupling angle. This observation is confirmed when $\Delta u/u$ and θ_e are plotted versus coupling angle for the specific node values of γ_1, obtained from figure 8.

Note also that while the error values are independent of coupling angle at the nodes themselves, the errors are also not significantly affected by changes in coupling angle near these node values, especially in the regions that are formed between two nodes that are close to each other. To minimize the influence of coupling angle on the values of $\Delta u/u$ and θ_e, measurements could be taken at values of γ_1 within these ranges. This is not a practical solution, however, because the value of γ_1 is not easy to control. An alternate approach might be to maintain coupling angle, a parameter that is easier to control, in the range between 60 to 90°. For this approach, the misalignment errors oscillate between +1.5% to -0.3% for $\Delta u/u$ and between +0.3 to -0.7° for θ_e, according to figure 8.

To expand this analysis to cover cases more general than those presented here, it is necessary to examine the behavior of $\Delta u/u$ and θ_e at other values of $\partial u/\partial r$ and $\partial \theta/\partial r$. It might appear promising to select a node value of γ_1 and plot a family of curves for which $\Delta u/u$ and θ_e are plotted versus $\partial u/\partial r$ and

also for various values of $\partial\theta/\partial r$, while coupling angle and Δr are held constant. Unfortunately, it is not possible to isolate the influence of either $\partial u/\partial r$ or $\partial\theta/\partial r$ from the influence of γ_1 or coupling angle because, as the values of $\partial u/\partial r$ and $\partial\theta/\partial r$ are varied, node locations that are common between sets of curves no longer occur. It must therefore be concluded that, although a parametric study can be conducted, too many interdependent variables are present to permit a graphical display of the results. However, a tabular presentation is feasible and the results are presented in the tables of appendix A.

CONCLUDING REMARKS

The equations developed in this memorandum provide a means for estimating the errors that can occur when two nonorthogonal measurements are made that are not exactly coincident. Although some prior knowledge of the flow field is required to calculate the values of the partial derivatives $\partial u/\partial r$ and $\partial\theta/\partial r$ exactly, a reasonable worst-case estimate can be obtained by estimating the largest values of $\partial u/\partial r$ and $\partial\theta/\partial r$ that are expected to occur where measurements are taken in the flow.

A parametric study was conducted using the equations that were developed in this memorandum, and the results are presented tabularly in appendix A. Unfortunately, the number of parameters affecting the final values of $\Delta u/u$ and θ_e is too large for graphical presentation in a format which covers all cases in general. However, specific sample cases are presented in addition to the tabular data to provide typical results for graphic presentation. The misalignment errors $\Delta u/u$ and θ_e are found to oscillate sinusiodally when plotted as a function of γ_1, a behavior that is expected because of the geometry of the problem. For example, for a nominal misalignment of 1 cm in the inlet flow, the misalignment errors are predicted not to exceed ±1% and ±1° for $\Delta u/u$ and θ_e, respectively, when measurements are made at coupling angles between 60 and 90°. For other cases, in general, an estimate of $\Delta u/u$ and θ_e can be obtained from the equations themselves or from the tables of appendix A.

APPENDIX A

A parametric study was conducted using equations 1 and 2 to determine the effect of the parameters Δr, coupling angle, γ_1, $\partial u/\partial r$, and $\partial\theta/\partial r$ on the misalignment errors $\Delta u/u$ and θ_e, and the results are presented in the tables of this appendix.

The tables are organized into three main subgroups, tables A1 through A3, each for misalignment distances of 0.5 cm, 1 cm, and 3 cm, respectively. In each subgroup, calculations are made for various values of $\partial a/\partial r$, $\partial\theta/\partial r$, coupling angle, and γ_1. Because the misalignment errors exhibit sinusiodal oscillatory behavior with γ_1, as shown in figure 8, only the largest positive and largest negative values are presented for each coupling angle. Each table entry therefore consists of a pair of values that represent a worst-case upper and lower limit of each error value.

Within each subgroup, the tables are organized into subtables. The first subtable contains the $\Delta u/u$ misalignment errors (magnitude) for various coupling angles and $\partial u/\partial r$ values; the second subtable contains the corresponding θ_e misalignment errors (angular). Two values appear in each table entry, representing the upper and lower limits of the oscillation due to γ_1, and each page within each of the three subgroups presents calculations for a different value of $\partial\theta/\partial r$.

The procedure for determining the worst-case misalignment error at a particular coupling angle consists of three steps. First, the appropriate table, A1 through A3, is selected, depending on the desired value of Δr, the misalignment distance. (This value is not necessarily determined solely by the LRLV positioning resolutions, presented in references 1 or 2, but depends also on the additional positioning uncertainty introduced by the vibration of the instrument, which has not yet been determined at this writing.) Next, the appropriate page within the selected table is located by searching for the desired $\partial\theta/\partial r$ value. Finally, the worst-case error limits are located at the specific coupling angle and $\partial u/\partial r$ value of interest.

TABLE I.--MISALIGNMENT ERRORS$\Delta u/u$ and θ_e FOR THE INLET FLOW AND EXHAUST FLOW OF FIGURES 6 AND 7.

Misalignment Distance	Inlet flow	Exhaust flow (Point 1)	Exhaust flow (Point 2)
Δr	$\Delta u/u$ θ_e	$\Delta u/u$ θ_e	$\Delta u/u$ θ_e
0.5 cm	0.17% - 0.27	1.1% 42	1.7% -2.4
1	0.35 - 0.55	46 07	35 -4.8
2	0.73 - 1.1	190 -89	7.8 -9.3

Table A1.- Variation of magnitude error and angular error with coupling angle, $\partial u/\partial r$, and $\partial \theta/\partial r$ for Δr = 0.5 cm.

MAGNITUDE ERROR, %
($\partial \theta/\partial r$ = 1.000 deg/m)

$\partial u/\partial r$	COUPLING ANGLE (deg)					
(1/sec)	30	45	60	90	120	150
0.5	3.68E-001 -1.32E-001	2.97E-001 -5.59E-002	2.67E-001 -2.18E-002	2.50E-001 3.83E-007	2.72E-001 -1.68E-002	3.83E-001 -1.17E-001
1.0	7.43E-001 -2 57E-001	5.99E-001 -1.07E-001	5.36E-001 -4.11E-002	5.00E-001 3.85E-007	5.41E-001 -3.61E-002	7.59E-001 -2.42E-001
3.0	2.25E+000 -7.49E-001	1.81E+000 -3.09E-001	1.61E+000 -1.18E-001	1.50E+000 3.92E-007	1.62E+000 -1.13E-001	2.27E+000 -7.34E-001
6.0	4.52E+000 -1.47E+000	3.62E+000 -6.09E-001	3.23E+000 -2.31E-001	3.00E+000 4.04E-007	3.24E+000 -2.26E-001	4.54E+000 -1.46E+000
9.0	6.81E+000 -2.18E+000	5.45E+000 -9.05E-001	4.85E+000 -3.42E-001	4.50E+000 4.16E-007	4.86E+000 -3.37E-001	6.83E+000 -2.16E+000
12.0	9.12E+000 -2.87E+000	7.28E+000 -1.20E+000	6 48E+000 -4.52E-001	6.00E+000 4.28E-007	6.48E+000 -4.47E-001	9.13E+000 -2.85E+000
15.0	1.14E+001 -3.54E+000	9.11E+000 -1.48E+000	8.10E+000 -5.59E-001	7.50E+000 4.40E-007	8.10E+000 -5.54E-001	1.14E+001 -3.52E+000

ANGULAR ERROR, deg
($\partial \theta/\partial r$ = 1.000 deg/m)

$\partial u/\partial r$	COUPLING ANGLE (deg)					
(1/sec)	30	45	60	90	120	150
0.5	2.69E-001 -1.67E-002	1.75E-001 -2.70E-002	1.26E-001 -3.88E-002	7.40E-002 -6.90E-002	4.38E-002 -1.21E-001	2.17E-002 -2.64E-001
1.0	5.36E-001 -3.58E-002	3.47E-001 -5.62E-002	2.50E-001 -8.00E-002	1.45E-001 -1.40E-001	8.50E-002 -2.45E-001	4.08E-002 -5.31E-001
3.0	1.59E+000 -1.12E-001	1.03E+000 -1.72E-001	7.41E-001 -2.44E-001	4.29E-001 -4.24E-001	2.49E-001 -7.36E-001	1.17E-001 -1.59E+000
6 0	3.16E+000 -2.24E-001	2.05E+000 -3.44E-001	1.47E+000 -4.86E-001	8.49E-001 -8.44E-001	4.91E-001 -1.46E+000	2.29E-001 -3.15E+000
9.0	4.70E+000 -3.35E-001	3.05E+000 -5.14E-001	2.19E+000 -7.25E-001	1.26E+000 -1.26E+000	7.30E-001 -2.18E+000	3.40E-001 -4.69E+000
12.0	6.22E+000 -4.45E-001	4.03E+000 -6.82E-001	2.89E+000 -9.61E-001	1.67E+000 -1.67E+000	9.66E-001 -2.89E+000	4.50E-001 -6.21E+000
15.0	7.72E+000 -5.52E-001	5.00E+000 -8.48E-001	3.58E+000 -1.19E+000	2.07E+000 -2.07E+000	1.20E+000 -3.58E+000	5.57E-001 -7.71E+000

Table A1.- Continued.

MAGNITUDE ERROR, %
(∂θ/∂r = 5.000 deg/m)

∂u/∂r (1/sec)	COUPLING ANGLE (deg) 30	45	60	90	120	150
0.5	3.41E-001 -1.66E-001	2.82E-001 -7.55E-002	2.59E-001 -3.41E-002	2.52E-001 -1.90E-003	2.84E-001 -8.89E-003	4.17E-001 -9.07E-002
1.0	7.13E-001 -2.87E-001	5.83E-001 -1.26E-001	5.26E-001 -5.12E-002	5.00E-001 -9.37E-006	5.51E-001 -2.60E-002	7.89E-001 -2.11E-001
3.0	2.22E+000 -7.79E-001	1.79E+000 -3.29E-001	1.60E+000 -1.28E-001	1.50E+000 9.81E-006	1.63E+000 -1.02E-001	2.30E+000 -7.04E-001
6.0	4.49E+000 -1.50E+000	3.61E+000 -6.29E-001	3.22E+000 -2.41E-001	3.00E+000 1.01E-005	3.25E+000 -2.16E-001	4.57E+000 -1.43E+000
9.0	6.78E+000 -2.21E+000	5.43E+000 -9.25E-001	4.84E+000 -3.52E-001	4.50E+000 1.04E-005	4.87E+000 -3.27E-001	6.86E+000 -2.14E+000
12.0	9.08E+000 -2.90E+000	7.26E+000 -1.22E+000	6.46E+000 -4.62E-001	6.00E+000 1.07E-005	6.49E+000 -4.37E-001	9.16E+000 -2.82E+000
15.0	1.14E+001 -3.57E+000	9.09E+000 -1.50E+000	8.09E+000 -5.69E-001	7.50E+000 1.10E-005	8.12E+000 -5.44E-001	1.15E+001 -3.50E+000

ANGULAR ERROR, deg
(∂θ/∂r = 5.000 deg/m)

∂u/∂r (1/sec)	COUPLING ANGLE (deg) 30	45	60	90	120	150
0.5	2.82E-001 -8.83E-003	1.86E-001 -1.83E-002	1.38E-001 -3.00E-002	8.51E-002 -6.01E-002	5.51E-002 -1.13E-001	3.38E-002 -2.57E-001
1.0	5.46E-001 -2.58E-002	3.58E-001 -4.74E-002	2.60E-001 -7.00E-002	1.55E-001 -1.30E-001	9.50E-002 -2.35E-001	5.08E-002 -5.21E-001
3.0	1.60E+000 -1.02E-001	1.04E+000 -1.63E-001	7.51E-001 -2.34E-001	4.39E-001 -4.14E-001	2.59E-001 -7.26E-001	1.27E-001 -1.58E+000
6.0	3.17E+000 -2.14E-001	2.06E+000 -3.35E-001	1.48E+000 -4.76E-001	8.59E-001 -8.34E-001	5.01E-001 -1.45E+000	2.39E-001 -3.14E+000
9.0	4.71E+000 -3.25E-001	3.06E+000 -5.03E-001	2.20E+000 -7.15E-001	1.27E+000 -1.25E+000	7.40E-001 -2.17E+000	3.50E-001 -4.68E+000
12.0	6.23E+000 -4.35E-001	4.04E+000 -6.71E-001	2.90E+000 -9.51E-001	1.68E+000 -1.66E+000	9.76E-001 -2.88E+000	4.60E-001 -6.20E+000
15.0	7.73E+000 -5.42E-001	5.01E+000 -8.36E-001	3.59E+000 -1.18E+000	2.08E+000 -2.06E+000	1.21E+000 -3.57E+000	5.67E-001 -7.70E+000

Table A1.- Continued.

MAGNITUDE ERROR, %
(∂θ/∂r = 10.000 deg/m)

∂u/∂r	COUPLING ANGLE (deg)					
(1/sec)	30	45	60	90	120	150
0.5	3.14E-001 -2.15E-001	2.68E-001 -1.05E-001	2.53E-001 -5.31E-002	2.57E-001 -7.41E-003	3.03E-001 -2.65E-003	4.66E-001 -6.39E-002
1.0	6.83E-001 -3.32E-001	5.64E-001 -1.51E-001	5.18E-001 -6.82E-002	5.04E-001 -3.81E-003	5.68E-001 -1.77E-002	8.34E-001 -1.81E-001
3.0	2.18E+000 -8.16E-001	1.77E+000 -3.53E-001	1.59E+000 -1.40E-001	1.50E+000 3.92E-005	1.64E+000 -8.99E-002	2.34E+000 -6.66E-001
6.0	4.45E+000 -1.54E+000	3.59E+000 -6.54E-001	3.21E+000 -2.53E-001	3.00E+000 4.04E-005	3.26E+000 -2.03E-001	4.61E+000 -1.39E+000
9.0	6.74E+000 -2.25E+000	5.41E+000 -9.49E-001	4.83E+000 -3.65E-001	4.50E+000 4.16E-005	4.88E+000 -3.15E-001	6.90E+000 -2.10E+000
12.0	9.04E+000 -2.93E+000	7.24E+000 -1.24E+000	6.45E+000 -4.74E-001	6.00E+000 4.28E-005	6.50E+000 -4.24E-001	9.21E+000 -2.79E+000
15.0	1.14E+001 -3.60E+000	9.07E+000 -1.53E+000	8.07E+000 -5.81E-001	7.50E+000 4.40E-005	8.13E+000 -5.32E-001	1.15E+001 -3.46E+000

ANGULAR ERROR, deg
(∂θ/∂r = 10.000 deg/m)

∂u/∂r	COUPLING ANGLE (deg)					
(1/sec)	30	45	60	90	120	150
0.5	3.01E-001 -2.63E-003	2.03E-001 -1.03E-002	1.54E-001 -2.12E-002	1.01E-001 -5.07E-002	7.12E-002 -1.04E-001	5.27E-002 -2.50E-001
1.0	5.63E-001 -1.76E-002	3.73E-001 -3.65E-002	2.75E-001 -6.00E-002	1.70E-001 -1.20E-001	1.10E-001 -2.25E-001	6.7[illegible]E-002 -5.1[illegible]E-001
3.0	1.62E+000 -8.92E-002	1.06E+000 -1.52E-001	7.64E-001 -2.21E-001	4.51E-001 -4.01E-001	2.71E-001 -7.14E-001	1.39E-001 -1.57E+000
6.0	3.18E+000 -2.02E-001	2.07E+000 -3.24E-001	1.49E+000 -4.64E-001	8.72E-001 -8.22E-001	5.14E-001 -1.44E+000	2.52E-001 -3.13E+000
9.0	4.73E+000 -3.13E-001	3.07E+000 -4.92E-001	2.21E+000 -7.03E-001	1.29E+000 -1.24E+000	7.53E-001 -2.16E+000	3.63E-001 -4.67E+000
12.0	6.25E+000 -4.22E-001	4.06E+000 -6.58E-001	2.91E+000 -9.38E-001	1.69E+000 -1.64E+000	9.88E-001 -2.86E+000	4.72E-001 -6.18E+000
15.0	7.75E+000 -5.30E-001	5.03E+000 -8.22E-001	3.61E+000 -1.17E+000	2.09E+000 -2.05E+000	1.22E+000 -3.56E+000	5.80E-001 -7.68E+000

Table A1.- Continued.

MAGNITUDE ERROR, %
(∂θ/∂r = 20.000 deg/m)

∂u/∂r (1/sec)	COUPLING ANGLE (deg) 30	45	60	90	120	150
0.5	2.78E-001 -3.30E-001	2.53E-001 -1.78E-001	2.50E-001 -1.01E-001	2.77E-001 -2.70E-002	3.51E-001 -1.99E-006	5.80E-001 -2.74E-002
1.0	6 29E-001 -4.30E-001	5.36E-001 -2.11E-001	5.05E-001 -1.06E-001	5.15E-001 -1.49E-002	6.06E-001 -5.24E-003	9.32E-001 -1.27E-001
3.0	2.11E+000 -9.03E-001	1.73E+000 -4.02E-001	1.57E+000 -1.71E-001	1 50E+000 -3 98E-003	1.67E+000 -6.87E-002	2.42E+000 -5.96E-001
6.0	4.37E+000 -1.61E+000	3.55E+000 -7.02E-001	3.18E+000 -2.78E-001	3.00E+000 1.62E-004	3.29E+000 -1.78E-001	4 69E+000 -1.32E+000
9 0	6.66E+000 -2.32E+000	5 37E+000 -9 98E-001	4 80E+000 -3 89E-001	4.50E+000 1.66E-004	4 91E+000 -2.89E-001	6.98E+000 -2 02E+000
12 0	8.96E+000 -3.01E+000	7.20E+000 -1 29E+000	6 42E+000 -4.99E-001	6.00E+000 1.71E-004	6 53E+000 -3.99E-001	9.29E+000 -2 72E+000
15 0	1.13E+001 -3.68E+000	9.03E+000 -1.58E+000	8 05E+000 -6.06E-001	7.50E+000 1.76E-004	8.16E+000 -5.07E-001	1.16E+001 -3.39E+000

ANGULAR ERROR, deg
(∂θ/∂r = 20 000 deg/m)

∂u/∂r (1/sec)	COUPLING ANGLE (deg) 30	45	60	90	120	150
0 5	3 48E-001 -1 98E-006	2.45E-001 -1.88E-003	1.92E-001 -9 06E-003	1 37E-001 -3 69E-002	1.09E-001 -9 16E-002	1 00E-001 -2.47E-001
1 0	6.01E-001 -5.22E-003	4.07E-001 -2 05E-002	3.08E-001 -4 22E-002	2.01E-001 -1.01E-001	1.42E-001 -2.07E-001	1.05E-001 -4 99E-001
3.0	1.65E+000 -6 85E-002	1.08E+000 -1.30E-001	7.92E-001 -1.98E-001	4.79E-001 -3.78E-001	2 99E-001 -6.90E-001	1.69E-001 -1.54E+000
6.0	3.21E+000 -1.77E-001	2.10E+000 -3.02E-001	1.52E+000 -4.39E-001	8.97E-001 -7 97E-001	5.39E-001 -1.42E+000	2.77E-001 -3.11E+000
9 0	4.76E+000 -2.88E-001	3.10E+000 -4.70E-001	2.23E+000 -6.78E-001	1.31E+000 -1.21E+000	7.78E-001 -2.13E+000	3.88E-001 -4.64E+000
12.0	6.28E+000 -3.97E-001	4.08E+000 -6.36E-001	2.94E+000 -9.13E-001	1.72E+000 -1.62E+000	1.01E+000 -2.84E+000	4.97E-001 -6.15E+000
15.0	7.78E+000 -5.05E-001	5.05E+000 -7.99E-001	3.63E+000 -1.15E+000	2.12E+000 -2.02E+000	1.25E+000 -3.53E+000	6.05E-001 -7.65E+000

Table A1.- Continued.

MAGNITUDE ERROR, %
($\partial\theta/\partial r$ = 40.000 deg/m)

$\partial u/\partial r$ (1/sec)	COUPLING ANGLE (deg) 30	45	60	90	120	150
0.5	2.51E-001 -6.06E-001	2.54E-001 -3.54E-001	2.71E-001 -2.23E-001	3.39E-001 -8.93E-002	4.73E-001 -2.15E-002	8.56E-001 -6.22E-004
1.0	5.56E-001 -6.61E-001	5.07E-001 -3.56E-001	5.00E-001 -2.02E-001	5.54E-001 -5.42E-002	7.02E-001 -9.36E-005	1.16E+000 -5.42E-002
3.0	1.99E+000 -1.08E+000	1.67E+000 -5.12E-001	1.54E+000 -2.38E-001	1.52E+000 -1.91E-002	1.74E+000 -3.59E-002	2.60E+000 -4.76E-001
6.0	4.25E+000 -1.79E+000	3.47E+000 -8.00E-001	3.14E+000 -3.41E-001	3.01E+000 -8.39E-003	3.35E+000 -1.35E-001	4.35E+000 -1.17E+000
9.0	6.52E+000 -2.49E+000	5.29E+000 -1.10E+000	4.75E+000 -4.43E-001	4.50E+000 6.65E-004	4.96E+000 -2.39E-001	7.14E+000 -1.68E+000
12.0	8.82E+000 -3.18E+000	7.11E+000 -1.39E+000	6.37E+000 -5.48E-001	6.00E+000 6.85E-004	6.58E+000 -3.48E-001	9.45E+000 -2.57E+000
15.0	1.11E+001 -3.85E+000	8.95E+000 -1.67E+000	7.99E+000 -5.55E-001	7.50E+000 7.04E-004	8.21E+000 -4.56E-001	1.18E+001 -3.21E+000

ANGULAR ERROR, deg
($\partial\theta/\partial r$ = 40.000 deg/m)

$\partial u/\partial r$ (1/sec)	COUPLING ANGLE (deg) 30	45	60	90	120	150
0.5	4.70E-001 -2.15E-002	3.46E-001 -2.39E-003	2.63E-001 -2.06E-004	2.23E-001 -2.24E-002	2.00E-001 -8.25E-002	2.21E-001 -2.68E-001
1.0	6.97E-001 -9.29E-005	4.90E-001 -3.69E-003	3.84E-001 -1.80E-002	2.74E-001 -7.35E-002	2.18E-001 -1.83E-001	2.00E-001 -4.97E-001
3.0	1.72E+000 -3.57E-002	1.15E+000 -9.23E-002	8.52E-001 -1.58E-001	5.38E-001 -3.37E-001	3.59E-001 -6.50E-001	2.38E-001 -1.51E+000
6.0	3.28E+000 -1.35E-001	2.15E+000 -2.58E-001	1.58E+000 -3.93E-001	9.53E-001 -7.49E-001	5.96E-001 -1.37E+000	3.37E-001 -3.05E+000
9.0	4.83E+000 -2.37E-001	3.15E+000 -4.26E-001	2.29E+000 -6.28E-001	1.36E+000 -1.16E+000	8.29E-001 -2.08E+000	4.32E-001 -4.59E+000
12.0	6.35E+000 -3.47E-001	4.14E+000 -5.92E-001	3.00E+000 -8.63E-001	1.77E+000 -1.57E+000	1.06E+000 -2.79E+000	5.46E-001 -6.10E+000
15.0	7.85E+000 -4.54E-001	5.11E+000 -7.56E-001	3.69E+000 -1.10E+000	2.17E+000 -1.97E+000	1.29E+000 -3.48E+000	6.54E-001 -7.58E+000

Table A1.- Continued.

MAGNITUDE ERROR, %
(∂θ/∂r = 60.000 deg/m)

∂u/∂r	COUPLING ANGLE (deg)					
(1/sec)	30	45	60	90	120	150
0.5	2 50E-001 -9.08E-001	2.73E-001 -5.48E-001	3.07E-001 -3.61E-001	4.14E-001 -1.65E-001	6.10E-001 -5.81E-002	1.16E+000 4.44E-005
1.0	5.20E-001 -9.28E-001	5.00E-001 -5.25E-001	5.16E-001 -3 20E-001	6 12E-001 -1.12E-001	8 19E-001 -1 65E-002	1.43E+000 -1.84E-002
3.0	1.89E+000 -1.29E+000	1.61E+000 -6.31E-001	1.52E+000 -3.20E-001	1.54E+000 -4.54E-002	1.82E+000 -1.51E-002	2.80E+000 -3 75E-001
6.0	4.12E+000 -1 97E+000	3.39E+000 -9.04E-001	3.11E+000 -4.09E-001	3.02E+000 -2.37E-002	3.42E+000 -1.02E-001	5.04E+000 -1.05E+000
9 0	6.39E+000 -2 67E+000	5.21E+000 -1.19E+000	4.72E+000 -5.11E-001	4.51E+000 -1.32E-002	5.02E+000 -1.99E-001	7.30E+000 -1 73E+000
12 0	8.69E+000 -3.36E+000	7 03E+000 -1.48E+000	6.33E+000 -6 12E-001	6.00E+000 -2.62E-003	6.64E+000 -2.97E-001	9 62E+000 -2.42E+000
15.0	1.10E+001 -4 03E+000	8.86E+000 -1.77E+000	7.95E+000 -7 13E-001	7 50E+000 1.58E-003	8.26E+000 -4.05E-001	1 19E+001 -3.10E+000

ANGULAR ERROR, deg
(∂θ/∂r = 60.000 deg/m)

∂u/∂r	COUPLING ANGLE (deg)					
(1/sec)	30	45	60	90	120	150
0.5	6.07E-001 -5.82E-002	4.58E-001 -1.37E-002	3.83E-001 0.00E+000	3.16E-001 -1 55E-002	3 00E-001 -8.20E-002	3.56E-001 -3 03E-001
1.0	8.15E-001 -1.65E-002	5 87E-001 0.00E+000	4.72E-001 -6 14E-003	3.57E-001 -5 64E-002	3 06E-001 -1 70E-001	3.16E-001 -5 07E-001
3.0	1.80E+000 -1.51E-002	1.22E+000 -6 04E-002	9.21E-001 -1.25E-001	6.03E-001 -3.01E-001	4 27E-001 -6.16E-001	3.16E-001 -1.48E+000
6.0	3.35E+000 -1.02E-001	2.22E+000 -2.14E-001	1 64E+000 -3.53E-001	1.01E+000 -7 08E-001	6.55E-001 -1 33E+000	4.04E-001 -3.02E+000
9.0	4.89E+000 -2.00E-001	3 21E+000 -3.82E-001	2.35E+000 -5.83E-001	1.42E+000 -1.11E+000	8.89E-001 -2.03E+000	5.05E-001 -4.54E+000
12 0	6.42E+000 -2.96E-001	4.20E+000 -5.48E-001	3.06E+000 -8.13E-001	1.83E+000 -1.52E+000	1.12E+000 -2.74E+000	6.04E-001 -6.05E+000
15.0	7.92E+000 -4.03E-001	5.17E+000 -7.12E-001	3.75E+000 -1.04E+000	2.23E+000 -1.92E+000	1.35E+000 -3.43E+000	7.03E-001 -7.53E+000

Table A1.- Continued.

MAGNITUDE ERROR, %
(∂θ/∂r = 80.000 deg/m)

∂u/∂r (1/sec)	COUPLING ANGLE (deg) 30	45	60	90	120	150
0.5	2.62E-001 -1.22E+000	2.98E-001 -7.49E-001	3.51E-001 -5.06E-001	4.96E-001 -2.47E-001	7.55E-001 -1.02E-001	1.47E+000 -1.23E-002
1 0	5.01E-001 -1 21E+000	5.08E-001 -7.08E-001	5.42E-001 -4.47E-001	6.78E-001 -1.79E-001	9.46E-001 -4.33E-002	1.71E+000 -8.95E-004
3.0	1 80E+000 -1 50E+000	1.57E+000 -7.71E-001	1 50E+000 -4 07E-001	1 58E+000 -7.64E-002	1 91E+000 1 22E-004	3.02E+000 -2.84E-001
6.0	3 99E+000 -2 15E+000	3.34E+000 -1.02E+000	3.07E+000 -4 76E-001	3.04E+000 -3.86E-002	3.48E+000 -6.93E-002	5.23E+000 -9.34E-001
9.0	6 26E+000 -2.85E+000	5 13E+000 -1.29E+000	4 68E+000 -5.79E-001	4.53E+000 -2.86E-002	5.09E+000 -1.66E-001	7.49E+000 -1.61E+000
12.0	8.55E+000 -3 53E+000	6 95E+000 -1.58E+000	6.29E+000 -6.81E-001	6.02E+000 -1.85E-002	6 70E+000 -2.60E-001	9 78E+000 -2 27E+000
15.0	1.09E+001 -4 21E+000	8.78E+000 -1 86E+000	7.91E+000 -7.81E-001	7.51E+000 -8.17E-003	8 32E+000 -3.54E-001	1 21E+001 -2.95E+000

ANGULAR ERROR, deg
(∂θ/∂r = 80.000 deg/m)

∂u/∂r (1/sec)	COUPLING ANGLE (deg) 30	45	60	90	120	150
0.5	7.52E-001 -1.02E-001	5.73E-001 -2 85E-002	4.87E-001 -4.12E-003	4.13E-001 -1 21E-002	4 04E-001 -8.57E-002	4.99E-001 -3.45E-001
1.0	9.43E-001 -4.35E-002	6.93E-001 -4.94E-003	5.67E-001 -2.96E-004	4.45E-001 -4.45E-002	4.00E-001 -1.64E-001	4.41E-001 -5.33E-001
3.0	1.89E+000 0.00E+000	1.30E+000 -3.90E-002	9.92E-001 -9.49E-002	6.71E-001 -2.68E-001	4.97E-001 -5.85E-001	4 01E-001 -1 47E+000
6.0	3.43E+000 -6.91E-002	2.29E+000 -1.82E-001	1.70E+000 -3.12E-001	1.07E+000 -6.66E-001	7 15E-001 -1.29E+000	4.71E-001 -2.98E+000
9.0	4.96E+000 -1.67E-001	3.28E+000 -3.38E-001	2.41E+000 -5.43E-001	1.48E+000 -1.07E+000	9.49E-001 -1 99E+000	5.72E-001 -4.49E+000
12 0	6.48E+000 -2.63E-001	4.26E+000 -5.04E-001	3.12E+000 -7.69E-001	1 89E+000 -1 47E+000	1.18E+000 -2 69E+000	6.71E-001 -6.00E+000
15 0	7 98E+000 -3.57E-001	5.23E+000 -6.68E-001	3.81E+000 -9.94E-001	2.29E+000 -1.87E+000	1.41E+000 -3.38E+000	7.70E-001 -7.48E+000

Table A1.- Continued.

MAGNITUDE ERROR, %
(∂θ/∂r =100.000 deg/m)

∂u/∂r	COUPLING ANGLE (deg)					
(1/sec)	30	45	60	90	120	150
0.5	2.73E-001 -1.54E+000	3.30E-001 -9.55E-001	3.95E-001 -6.51E-001	5.77E-001 -3.29E-001	8.99E-001 -1.47E-001	1.79E+000 -2.51E-002
1.0	5.00E-001 -1.52E+000	5.23E-001 -8.99E-001	5.78E-001 -5.85E-001	7.53E-001 -2.55E-001	1.08E+000 -8.00E-002	2.02E+000 1.55E-006
3.0	1.73E+000 -1.74E+000	1.54E+000 -9.15E-001	1.50E+000 -5.07E-001	1.62E+000 -1.20E-001	2.01E+000 2.41E-006	3.26E+000 -2 20E-001
6.0	3.89E+000 -2.36E+000	3.28E+000 -1.14E+000	3.05E+000 -5.57E-001	3.06E+000 -6.27E-002	3 56E+000 -4 41E-002	5.42E+000 -8.19E-001
9.0	6.13E+000 -3.02E+000	5.07E+000 -1.41E+000	4.65E+000 -6.46E-001	4.54E+000 -4.37E-002	5 16E+000 -1 34E-001	7.68E+000 -1.49E+000
12.0	8.42E+000 -3.71E+000	6.87E+000 -1.68E+000	6.26E+000 -7 48E-001	6.03E+000 -3.40E-002	6.77E+000 -2.28E-001	9.96E+000 -2.15E+000
15.0	1.07E+001 -4.38E+000	8.69E+000 -1.96E+000	7.87E+000 -8.50E-001	7.52E+000 -2.41E-002	8.38E+000 -3.19E-001	1.23E+001 -2.80E+000

ANGULAR ERROR, deg
(∂θ/∂r =100.000 deg/m)

∂u/∂r	COUPLING ANGLE (deg)					
(1/sec)	30	45	60	90	120	150
0 5	8.97E-001 -1.48E-001	6.92E-001 -4.72E-002	5.92E-001 -8 47E-003	5.09E-001 -9.00E-003	5.08E-001 -8.96E-002	6.42E-001 -3.88E-001
1 0	1 08E+000 -8.03E-002	8.02E-001 -1.36E-002	6.67E-001 0 00E+000	5.39E-001 -3.73E-002	5.00E-001 -1.63E-001	5.76E-001 -5.67E-001
3.0	1.99E+000 0 00E+000	1.38E+000 -1.99E-002	1.07E+000 -7.36E-002	7 46E-001 -2.43E-001	5.76E-001 -5.63E-001	5.00E-001 -1.46E+000
6.0	3.51E+000 -4.47E-002	2.35E+000 -1.49E-001	1.77E+000 -2.76E-001	1.14E+000 -6 27E-001	7.82E-001 -1.25E+000	5.49E-001 -2 95E+000
9 0	5 04E+000 -1.34E-001	3.35E+000 -3.00E-001	2.47E+000 -5 03E-001	1.54E+000 -1.03E+000	1.01E+000 -1.95E+000	6.38E-001 -4.46E+000
12.0	6.55E+000 -2.30E-001	4.33E+000 -4.60E-001	3.18E+000 -7.29E-001	1.94E+000 -1.43E+000	1.24E+000 -2.64E+000	7.38E-001 -5.95E+000
15.0	8.05E+000 -3.24E-001	5.30E+000 -6.23E-001	3.87E+000 -9.52E-001	2.35E+000 -1.82E+000	1.47E+000 -3.33E+000	8.37E-001 -7.43E+000

Table A1.- Concluded.

MAGNITUDE ERROR, %
(∂θ/∂r =120.000 deg/m)

∂u/∂r (1/sec)	COUPLING ANGLE (deg) 30	45	60	90	120	150
0.5	2.93E-001 -1.86E+000	3.61E-001 -1.16E+000	4.43E-001 -8 01E-001	6.62E-001 -4.15E-001	1.05E+000 -1.95E-001	2.11E+000 -4.46E-002
1.0	4.99E-001 -1.82E+000	5.46E-001 -1.10E+000	6.15E-001 -7.23E-001	8.28E-001 -3.31E-001	1.22E+000 -1.17E-001	2.32E+000 1.92E-004
3.0	1.67E+000 -1.99E+000	1.52E+000 -1.07E+000	1.50E+000 -6.11E-001	1.66E+000 -1.66E-001	2.11E+000 -1.36E-003	3.50E+000 -1.56E-001
6.0	3.79E+000 -2.57E+000	3.22E+000 -1.27E+000	3.03E+000 -6.42E-001	3.09E+000 -9.27E-002	3.65E+000 -2 84E-002	5.63E+000 -7.30E-001
9.0	6.01E+000 -3.22E+000	5.01E+000 -1.53E+000	4.61E+000 -7 13E-001	4 56E+000 -5.85E-002	5.23E+000 -1.00E-001	7.37E+000 -1.37E+000
12.0	8.28E+000 -3.89E+000	6.81E+000 -1.80E+000	6 22E+000 -8 16E-001	6.05E+000 -4.92E-002	6.84E+000 -1.95E-001	1.02E+001 -2.03E+000
15 0	1 06E+001 -4.56E+000	8.62E+000 -2.07E+000	7 83E+000 -9 17E-001	7.54E+000 -3.97E-002	8.46E+000 -2.87E-001	1.24E+001 -2 66E+000

ANGULAR ERROR, deg
(∂θ/∂r =120 000 deg/m)

∂u/∂r (1/sec)	COUPLING ANGLE (deg) 30	45	60	90	120	150
0.5	1.05E+000 -1.96E-001	8 10E-001 -6.60E-002	6 99E-001 -1.49E-002	6 08E-001 -7.58E-003	6.14E-001 -9 53E-002	7 86E-001 -4.33E-001
1.0	1.22E+000 -1 18E-001	9.17E-001 -2.80E-002	7.67E-001 0.00E+000	6.32E-001 -3.04E-002	6 00E-001 -1.63E-001	7.12E-001 -6.01E-001
3.0	2.10E+000 -1.35E-003	1.47E+000 -1.03E-002	1.15E+000 -5 28E-002	8 23E-001 -2.17E-001	6.56E-001 -5 41E-001	6.01E-001 -1.46E+000
6.0	3.59E+000 -2.86E-002	2.43E+000 -1 17E-001	1.83E+000 -2.46E-001	1.20E+000 -5.94E-001	8.51E-001 -1.22E+000	6.31E-001 -2.93E+000
9.0	5.12E+000 -1.00E-001	3.41E+000 -2.68E-001	2.53E+000 -4 62E-001	1 60E+000 -9 88E-001	1 07E+000 -1 91E+000	7.04E-001 -4.42E+000
12.0	6.64E+000 -1.96E-001	4.40E+000 -4.15E-001	3 23E+000 -6.89E-001	2.00E+000 -1.39E+000	1.30E+000 -2.60E+000	8.04E-001 -5 90E+000
15 0	8.14E+000 -2.91E-001	5.37E+000 -5.78E-001	3.93E+000 -9.12E-001	2 40E+000 -1 78E+000	1.53E+000 -3.28E+000	9.04E-001 -7.38E+000

Table A2.- Variation of magnitude error and angular error with coupoling angle, $\partial u/\partial r$, and $\partial \theta/\partial r$ for Δr = 1.0 cm.

MAGNITUDE ERROR, %
($\partial \theta/\partial r$ = 1.000 deg/m)

$\partial u/\partial r$	COUPLING ANGLE (deg)					
(1/sec)	30	45	60	90	120	150
0 5	7.36E-001 -2.64E-001	5.95E-001 -1.12E-001	5.34E-001 -4.36E-002	5.00E-001 1.54E-006	5.44E-001 -3.35E-002	7 66E-001 -2.34E-001
1.0	1 49E+000 -5.11E-001	1.20E+000 -2.13E-001	1.07E+000 -8.20E-002	1.00E+000 1.55E-006	1.08E+000 -7.19E-002	1.52E+000 -4.81E-001
3.0	4.52E+000 -1.48E+000	3.62E+000 -6.14E-001	3.23E+000 -2.33E-001	3.00E+000 1.62E-006	3.24E+000 -2.23E-001	4.55E+000 -1.45E+000
6.0	9.11E+000 -2.88E+000	7.27E+000 -1.20E+000	6.47E+000 -4.54E-001	6.00E+000 1.71E-006	6.48E+000 -4.44E-001	9.14E+000 -2.85E+000
9.0	1.38E+001 -4 20E+000	1.09E+001 -1.77E+000	9.72E+000 -6.67E-001	9 00E+000 1.81E-006	9.73E+000 -6.57E-001	1 38E+001 -4.17E+000
12.0	1.85E+001 -5 47E+000	1.46E+001 -2 32E+000	1.30E+001 -8.73E-001	1.20E+001 1.91E-006	1.30E+001 -8.63E-001	1.85E+001 -5.43E+000
15 0	2 32E+001 -6 71E+000	1.84E+001 -2.85E+000	1.62E+001 -1 07E+000	1.50E+001 2.01E-006	1.62E+001 -1.06E+000	2.33E+001 -6.67E+000

ANGULAR ERROR, deg
($\partial \theta/\partial r$ = 1 000 deg/m)

$\partial u/\partial r$	COUPLING ANGLE (deg)					
(1/sec)	30	45	60	90	120	150
0.5	5.38E-001 -3.33E-002	3.50E-001 -5.40E-002	2 52E-001 -7.75E-002	1.48E-001 -1.38E-001	8.75E-002 -2.42E-001	4.33E-002 -5.28E-001
1.0	1.07E+000 -7.14E-002	6.93E-001 -1.12E-001	4.99E-001 -1.60E-001	2 90E-001 -2.80E-001	1.70E-001 -4.89E-001	8.14E-002 -1.06E+000
3.0	3.16E+000 -2.22E-001	2.05E+000 -3.41E-001	1.47E+000 -4.84E-001	8.52E-001 -8.42E-001	4.94E-001 -1.46E+000	2.32E-001 -3.15E+000
6.0	6.22E+000 -4.42E-001	4.03E+000 -6.79E-001	2 89E+000 -9.58E-001	1 67E+000 -1.66E+000	9.68E-001 -2.88E+000	4.52E-001 -6.21E+000
9.0	9.20E+000 -6.56E-001	5.96E+000 -1.01E+000	4.27E+000 -1.42E+000	2.47E+000 -2.46E+000	1.43E+000 -4.26E+000	6.66E-001 -9.19E+000
12.0	1.21E+001 -8.64E-001	7.82E+000 -1.33E+000	5.61E+000 -1.87E+000	3.24E+000 -3.23E+000	1.88E+000 -5.60E+000	8 74E-001 -1.21E+001
15 0	1.48E+001 -1.07E+000	9.63E+000 -1.64E+000	6.92E+000 -2.30E+000	4.00E+000 -3.99E+000	2.31E+000 -6.91E+000	1.08E+000 -1.48E+001

Table A2.- Continued.

MAGNITUDE ERROR, %
($\partial\theta/\partial r$ = 5.000 deg/m)

$\partial u/\partial r$ (1/sec)	COUPLING ANGLE (deg) 30	45	60	90	120	150
0.5	6.83E-001 -3.32E-001	5.64E-001 -1.51E-001	5.18E-001 -6.82E-002	5.04E-001 -3 81E-003	5.68E-001 -1 77E-002	8.34E-001 -1.81E-001
1.0	1.43E+000 -5.73E-001	1.17E+000 -2.52E-001	1 05E+000 -1.02E-001	1 00E+000 -5 68E-005	1 10E+000 -5 17E-002	1.58E+000 -4.21E-001
3.0	4.45E+000 -1.54E+000	3.59E+000 -6 54E-001	3 21E+000 -2 53E-001	3 00E+000 4 04E-005	3.26E+000 -2.03E-001	4.61E+000 -1.39E+000
6.0	9.04E+000 -2 93E+000	7 24E+000 -1.24E+000	6 45E+000 -4.74E-001	6 00E+000 4 28E-005	6 50E+000 -4 24E-001	9 21E+000 -2.79E+000
9 0	1 37E+001 -4.25E+000	1 09E+001 -1.81E+000	9 70E+000 -6.87E-001	9 00E+000 4 52E-005	9 75E+000 -6.37E-001	1 39E+001 -4.11E+000
12.0	1 84E+001 -5 54E+000	1.46E+001 -2 36E+000	1 30E+001 -6 92E-001	1 20E+001 4.78E-005	1 30E+001 -8 43E-001	1.85E+001 -5.36E+000
15.0	2.32E+001 -6.78E+000	1.83E+001 -2.89E+000	1 62E+001 -1 09E+000	1 50E+001 5 04E-005	1.63E+001 -1 04E+000	2 33E+001 -6.61E+000

ANGULAR ERROR, deg
($\partial\theta/\partial r$ = 5 000 deg/m)

$\partial u/\partial r$ (1/sec)	COUPLING ANGLE (deg) 30	45	60	90	120	150
0.5	5.63E-001 -1 76E-002	3.73E-001 -3 65E-002	2.75E-001 -6 00E-002	1 70E-001 -1 20E-001	1.10E-001 -2.25E-001	6 77E-002 -5.12E-001
1 0	1 09E+000 -5 13E-002	7 15E-001 -9.45E-002	5 19E-001 -1 40E-001	3 10E-001 -2.60E-001	1.90E-001 -4 69E-001	1 02E-001 -1 04E+000
3.0	3.18E+000 -2.02E-001	2.07E+000 -3.24E-001	1 49E+000 -4.64E-001	8 72E-001 -8 22E-001	5 14E-001 -1 44E+000	2 52E-001 -3.13E+000
6 0	6 25E+000 -4 22E-001	4.06E+000 -6 58E-001	2 91E+000 -9 38E-001	1 69E+000 -1 64E+000	9.88E-001 -2.86E+000	4 72E-001 -6 18E+000
9.0	9.23E+000 -6.36E-001	5.98E+000 -9 86E-001	4.29E+000 -1 40E+000	2.49E+000 -2.44E+000	1.45E+000 -4 24E+000	6.86E-001 -9 16E+000
12 0	1 21E+001 -8.44E-001	7 85E+000 -1.31E+000	5.64E+000 -1 85E+000	3 26E+000 -3 21E+000	1 90E+000 -5.58E+000	8 94E-001 -1 20E+001
15.0	1.49E+001 -1.05E+000	9.65E+000 -1 62E+000	6.95E+000 -2 28E+000	4 02E+000 -3.97E+000	2 33E+000 -6.89E+000	1.12E+000 -1 48E+001

Table A2.- Continued.

MAGNITUDE ERROR, %
(∂θ/∂r = 10.000 deg/m)

∂u/∂r	COUPLING ANGLE (deg)					
(1/sec)	30	45	60	90	120	150
0.5	6.29E-001 -4.30E-001	5.36E-001 -2.11E-001	5.05E-001 -1.06E-001	5.15E-001 -1.49E-002	6.06E-001 -5.24E-003	9.32E-001 -1.27E-001
1.0	1.37E+000 -6.63E-001	1.13E+000 -3.02E-001	1 04E+000 -1.36E-001	1.01E+000 -7.67E-003	1.14E+000 -3.52E-002	1.67E+000 -3.60E-001
3.0	4.37E+000 -1.61E+000	3.55E+000 -7.02E-001	3.18E+000 -2.78E-001	3.00E+000 1.62E-004	3.29E+000 -1.78E-001	4.69E+000 -1.32E+000
6.0	8.96E+000 -3.01E+000	7.20E+000 -1 29E+000	6.42E+000 -4.99E-001	6.00E+000 1.71E-004	6.53E+000 -3 99E-001	9.29E+000 -2 72E+000
9.0	1.36E+001 -4.34E+000	1.09E+001 -1.86E+000	9.67E+000 -7.11E-001	9.00E+000 1.81E-004	9.78E+000 -6.12E-001	1 39E+001 -4.04E+000
12.0	1 83E+001 -5.63E+000	1.46E+001 -2.41E+000	1.29E+001 -9.16E-001	1.20E+001 1.91E-004	1.30E+001 -8.18E-001	1.86E+001 -5.29E+000
15 0	2 31E+001 -6.87E+000	1 83E+001 -2.94E+000	1.62E+001 -1.11E+000	1.50E+001 2 01E-004	1.63E+001 -1 02E+000	2.34E+001 -6.52E+000

ANGULAR ERROR, deg
(∂θ/∂r = 10.000 deg/m)

∂u/∂r	COUPLING ANGLE (deg)					
(1/sec)	30	45	60	90	120	150
0 5	6 01E-001 -5 22E-003	4 07E-001 -2 05E-002	3.08E-001 -4 22E-002	2.01E-001 -1.01E-001	1 42E-001 -2.07E-001	1.05E-001 -4.99E-001
1.0	1 12E+000 -3.50E-002	7.44E-001 -7.26E-002	5.49E-001 -1.19E-001	3.40E-001 -2.39E-001	2 20E-001 -4.48E-001	1.35E-001 -1.02E+000
3.0	3.21E+000 -1.77E-001	2.10E+000 -3.02E-001	1 52E+000 -4.39E-001	8.97E-001 -7.97E-001	5.39E-001 -1.42E+000	2 77E-001 -3.11E+000
6.0	6.28E+000 -3 97E-001	4.08E+000 -6.36E-001	2.94E+000 -9 13E-001	1 72E+000 -1 62E+000	1.01E+000 -2 84E+000	4.97E-001 -6.15E+000
9 0	9.26E+000 -6.11E-001	6.01E+000 -9.60E-001	4.32E+000 -1.37E+000	2.52E+000 -2.42E+000	1.47E+000 -4.22E+000	7.11E-001 -9.12E+000
12.0	1.21E+001 -8.19E-001	7.87E+000 -1.28E+000	5.67E+000 -1.82E+000	3.29E+000 -3.19E+000	1.92E+000 -5.55E+000	9.19E-001 -1.20E+001
15.0	1.49E+001 -1.02E+000	9.68E+000 -1.59E+000	6.98E+000 -2.26E+000	4.04E+000 -3.94E+000	2.36E+000 -6.86E+000	1.12E+000 -1.48E+001

Table A2.- Continued.

MAGNITUDE ERROR, %
(∂θ/∂r = 20.000 deg/m)

∂u/∂r (1/sec)	COUPLING ANGLE (deg) 30	45	60	90	120	150
0.5	5.56E-001 -6.61E-001	5.07E-001 -3.56E-001	5.00E-001 -2.02E-001	5.54E-001 -5.42E-002	7.02E-001 -9.36E-005	1.16E+000 -5.42E-002
1.0	1.26E+000 -8.60E-001	1.07E+000 -4.21E-001	1.01E+000 -2.13E-001	1.03E+000 -3.00E-002	1.21E+000 -1.03E-002	1.87E+000 -2.52E-001
3.0	4.25E+000 -1.79E+000	3.47E+000 -8 00E-001	3.14E+000 -3.41E-001	3.01E+000 -8.39E-003	3.35E+000 -1.35E-001	4.85E+000 -1.17E+000
6.0	8.82E+000 -3 18E+000	7.11E+000 -1.39E+000	6.37E+000 -5 48E-001	6.00E+000 6.85E-004	6.58E+000 -3 48E-001	9.45E+000 -2.57E+000
9 0	1 35E+001 -4 52E+000	1 08E+001 -1.95E+000	9 62E+000 -7 60E-001	9.00E+000 7.24E-004	9.84E+000 -5 62E-001	1.41E+001 -3.90E+000
12 0	1 82E+001 -5 80E+000	1 45E+001 -2.50E+000	1.29E+001 -9.65E-001	1.20E+001 7.64E-004	1.31E+001 -7.69E-001	1.88E+001 -5.15E+000
15.0	2.30E+001 -7 04E+000	1.82E+001 -3.03E+000	1 61E+001 -1.16E+000	1.50E+001 8.06E-004	1.64E+001 -9.68E-001	2.36E+001 -6.34E+000

ANGULAR ERROR, deg
(∂θ/∂r = 20.000 deg/m)

∂u/∂r (1/sec)	COUPLING ANGLE (deg) 30	45	60	90	120	150
0 5	6.97E-001 -9.29E-005	4.90E-001 -3 69E-003	3.84E-001 -1.80E-002	2.74E-001 -7.35E-002	2.18E-001 -1 83E-001	2.00E-001 -4 93E-001
1 0	1.20E+000 -1.02E-002	8.13E-001 -4.07E-002	6.14E-001 -8.39E-002	4.03E-001 -2.02E-001	2.85E-001 -4.12E-001	2.11E-001 -9 94E-001
3.0	3.28E+000 -1.35E-001	2.15E+000 -2.58E-001	1.58E+000 -3.93E-001	9 53E-001 -7 49E-001	5 96E-001 -1.37E+000	3.37E-001 -3 06E+000
6.0	6.35E+000 -3.47E-001	4.14E+000 -5.92E-001	3.00E+000 -8.63E-001	1.77E+000 -1.57E+000	1.06E+000 -2.79E+000	5.46E-001 -6.10E+000
9 0	9 33E+000 -5.61E-001	6.07E+000 -9.16E-001	4.38E+000 -1.32E+000	2.57E+000 -2.37E+000	1.52E+000 -4.17E+000	7.60E-001 -9.06E+000
12 0	1 22E+001 -7.69E-001	7.93E+000 -1.23E+000	5.73E+000 -1.77E+000	3.34E+000 -3.14E+000	1.97E+000 -5.50E+000	9.68E-001 -1.19E+001
15.0	1.50E+001 -9.71E-001	9.75E+000 -1 53E+000	7.04E+000 -2.21E+000	4.10E+000 -3.89E+000	2.41E+000 -6.80E+000	1 17E+000 -1 47E+001

Table A2.- Continued.

MAGNITUDE ERROR, %
(∂θ/∂r = 40.000 deg/m)

∂u/∂r	COUPLING ANGLE (deg)					
(1/sec)	30	45	60	90	120	150
0.5	5.01E-001 -1.21E+000	5.08E-001 -7.08E-001	5.42E-001 -4.47E-001	6.78E-001 -1.79E-001	9.46E-001 -4.33E-002	1.71E+000 -8.95E-004
1.0	1.11E+000 -1.32E+000	1.01E+000 -7.14E-001	1.00E+000 -4.06E-001	1.11E+000 -1.09E-001	1.41E+000 -5.46E-004	2.33E+000 -1.06E-001
3.0	3.99E+000 -2.15E+000	3.34E+000 -1.02E+000	3.07E+000 -4.76E-001	3.04E+000 -3.86E-002	3.48E+000 -6.93E-002	5.23E+000 -9.34E-001
6.0	8.55E+000 -3.53E+000	6.95E+000 -1.58E+000	6.29E+000 -6.81E-001	6 02E+000 -1.85E-002	6.70E+000 -2.60E-001	9.78E+000 -2.27E+000
9.0	1.32E+001 -4.87E+000	1.06E+001 -2.15E+000	9.53E+000 -8.81E-001	9.00E+000 2.28E-003	9.95E+000 -4.60E-001	1.44E+001 -3.61E+000
12.0	1.79E+001 -6.15E+000	1.43E+001 -2.69E+000	1.28E+001 -1.08E+000	1.20E+001 3.06E-003	1.32E+001 -6.68E-001	1.92E+001 -4.87E+000
15.0	2 27E+001 -7.38E+000	1.80E+001 -3.22E+000	1.60E+001 -1.27E+000	1.50E+001 3.22E-003	1.65E+001 -8.68E-001	2.39E+001 -6.06E+000

ANGULAR ERROR, deg
(∂θ/∂r = 40.000 deg/m)

∂u/∂r	COUPLING ANGLE (deg)					
(1/sec)	30	45	60	90	120	150
0.5	9.43E-001 -4.35E-002	6.93E-001 -4.94E-003	5.67E-001 -2.96E-004	4.45E-001 -4.45E-002	4.00E-001 -1.64E-001	4 41E-001 -5.33E-001
1.0	1.40E+000 -5.42E-004	9.81E-001 -7.13E-003	7.68E-001 -3.56E-002	5.48E-001 -1.46E-001	4.37E-001 -3.63E-001	4.00E-001 -9.80E-001
3.0	3.43E+000 -6.91E-002	2.29E+000 -1.82E-001	1.70E+000 -3.12E-001	1.07E+000 -6.66E-001	7.15E-001 -1.29E+000	4.71E-001 -2.98E+000
6.0	6.48E+000 -2.63E-001	4.26E+000 -5.04E-001	3.12E+000 -7.69E-001	1.89E+000 -1.47E+000	1.18E+000 -2.69E+000	6.71E-001 -6.00E+000
9.0	9.46E+000 -4.59E-001	6.19E+000 -8.28E-001	4.50E+000 -1.22E+000	2.68E+000 -2.27E+000	1.63E+000 -4.07E+000	8.68E-001 -8.93E+000
12.0	1.23E+001 -6.67E-001	8.06E+000 -1.14E+000	5.85E+000 -1.67E+000	3.46E+000 -3.04E+000	2.08E+000 -5.40E+000	1.07E+000 -1.18E+001
15.0	1.52E+001 -8.69E-001	9.89E+000 -1.45E+000	7.16E+000 2.11E+000	4.22E+000 -3.79E+000	2.51E+000 -6.69E+000	1.27E+000 -1.46E+001

Table A2.- Continued.

MAGNITUDE ERROR, %
(∂θ/∂r = 60.000 deg/m)

∂u/∂r (1/sec)	COUPLING ANGLE (deg) 30	45	60	90	120	150
0.5	4.99E-001 -1.82E+000	5.46E-001 -1.10E+000	6.15E-001 -7.23E-001	8.28E-001 -3.31E-001	1.22E+000 -1.17E-001	2.32E+000 1.92E-004
1.0	1.04E+000 -1.86E+000	9.99E-001 -1.05E+000	1.03E+000 -6.42E-001	1.22E+000 -2.26E-001	1.64E+000 -3.41E-002	2.86E+000 -3.54E-002
3.0	3.79E+000 -2.57E+000	3.22E+000 -1.27E+000	3.03E+000 -6.42E-001	3.09E+000 -9.27E-002	3.65E+000 -2.84E-002	5.63E+000 -7.30E-001
6.0	8.28E+000 -3.89E+000	6.81E+000 -1.80E+000	6.22E+000 -8.16E-001	6.05E+000 -4.92E-002	6.84E+000 -1.95E-001	1.02E+001 -2.03E+000
9.0	1 29E+001 -5.22E+000	1.04E+001 -2.34E+000	9.45E+000 -1.02E+000	9.03E+000 -3.02E-002	1.01E+001 -3.76E-001	1.48E+001 -3.32E+000
12.0	1.76E+001 -6.49E+000	1.41E+001 -2 88E+000	1.27E+001 -1.22E+000	1 20E+001 -1.06E-002	1.33E+001 -5.65E-001	1.95E+001 -4.59E+000
15.0	2.24E+001 -7.72E+000	1.78E+001 -3.41E+000	1.59E+001 -1.41E+000	1.50E+001 7.25E-003	1.66E+001 -7.66E-001	2.43E+001 -5.79E+000

ANGULAR ERROR, deg
(∂θ/∂r = 60.000 deg/m)

∂u/∂r (1/sec)	COUPLING ANGLE (deg) 30	45	60	90	120	150
0 5	1.22E+000 -1.18E-001	9.17E-001 -2.80E-002	7 67E-001 0 00E+000	6.32E-001 -3.04E-002	6.00E-001 -1.63E-001	7.12E-001 -6.01E-001
1 0	1.63E+000 -3.41E-002	1.18E+000 0.00E+000	9.45E-001 -1.20E-002	7.15E-001 -1.12E-001	6 13E-001 -3.38E-001	6.32E-001 -1.01E+000
3 0	3.59E+000 -2.86E-002	2.43E+000 -1.17E-001	1.83E+000 -2.46E-001	1.20E+000 -5.94E-001	8.51E-001 -1.22E+000	6.31E-001 -2.93E+000
6.0	6.64E+000 -1.96E-001	4.40E+000 -4.15E-001	3 23E+000 -6.89E-001	2.00E+000 -1.39E+000	1.30E+000 -2.60E+000	8.04E-001 -5.90E+000
9.0	9.62E+000 -3.84E-001	6.32E+000 -7.39E-001	4.62E+000 -1.13E+000	2.80E+000 -2.16E+000	1.75E+000 -3.96E+000	1.00E+000 -8 83E+000
12.0	1.25E+001 -5.64E-001	8.20E+000 -1.05E+000	5.97E+000 -1.57E+000	3.58E+000 -2.94E+000	2.20E+000 -5.30E+000	1.20E+000 -1.17E+001
15.0	1.53E+001 -7.66E-001	1.00E+001 -1.36E+000	7.28E+000 -2.00E+000	4.33E+000 -3.69E+000	2.63E+000 -6.59E+000	1.39E+000 -1.44E+001

Table A2.- Continued.

MAGNITUDE ERROR, %
($\partial\theta/\partial r$ = 80.000 deg/m)

$\partial u/\partial r$ (1/sec)	COUPLING ANGLE (deg) 30	45	60	90	120	150
0.5	5.22E-001 -2.45E+000	5.97E-001 -1.50E+000	7.02E-001 -1.01E+000	9.91E-001 -4.95E-001	1.51E+000 -2.06E-001	2.95E+000 -2.55E-002
1.0	1.00E+000 -2.43E+000	1.02E+000 -1.42E+000	1.08E+000 -8.99E-001	1.36E+000 -3.61E-001	1.89E+000 -8.82E-002	3.43E+000 -3.91E-004
3.0	3.62E+000 -3.01E+000	3.14E+000 -1.54E+000	3.00E+000 -8.20E-001	3.15E+000 -1.57E-001	3.82E+000 4.15E-004	6.06E+000 -5.49E-001
6.0	8.05E+000 -4.28E+000	6.69E+000 -2.04E+000	6.15E+000 -9.52E-001	6.07E+000 -7.85E-002	6.98E+000 -1.29E-001	1.05E+001 -1.80E+000
9.0	1.26E+001 -5.56E+000	1.03E+001 -2.57E+000	9.37E+000 -1.15E+000	9.06E+000 -6.12E-002	1.02E+001 -3.12E-001	1.51E+001 -3.05E+000
12.0	1.73E+001 -6.83E+000	1.40E+001 -3.10E+000	1.26E+001 -1.35E+000	1.20E+001 -4.34E-002	1.34E+001 -4.83E-001	1.99E+001 -4.30E+000
15.0	2.20E+001 -8.05E+000	1.76E+001 -3.61E+000	1.59E+001 -1.55E+000	1.50E+001 -2.51E-002	1.67E+001 -6.62E-001	2.46E+001 -5.51E+000

ANGULAR ERROR, deg
($\partial\theta/\partial r$ = 80.000 deg/m)

$\partial u/\partial r$ (1/sec)	COUPLING ANGLE (deg) 30	45	60	90	120	150
0.5	1.51E+000 -2.08E-001	1.15E+000 -5.83E-002	9.76E-001 -8.59E-003	8.26E-001 -2.37E-002	8.07E-001 -1.70E-001	9.95E-001 -6.83E-001
1.0	1.89E+000 -8.91E-002	1.39E+000 -1.05E-002	1.14E+000 -1.29E-004	8.92E-001 -8.74E-002	6.01E-001 -3.25E-001	8.82E-001 -1.05E+000
3.0	3.79E+000 0.00E+000	2.59E+000 -7.50E-002	1.98E+000 -1.86E-001	1.34E+000 -5.27E-001	9.94E-001 -1.15E+000	5.04E-001 -2.69E+000
6.0	6.81E+000 -1.29E-001	4.53E+000 -3.51E-001	3.37E+000 -6.07E-001	2.12E+000 -1.30E+000	1.42E+000 -2.52E+000	9.35E-001 -5.83E+000
9.0	9.79E+000 -3.17E-001	6.46E+000 -6.50E-001	4.74E+000 -1.05E+000	2.92E+000 -2.08E+000	1.87E+000 -3.87E+000	1.13E+000 -8.73E+000
12.0	1.27E+001 -4.98E-001	8.34E+000 -9.65E-001	6.08E+000 -1.48E+000	3.69E+000 -2.84E+000	2.32E+000 -5.20E+000	1.33E+000 -1.15E+001
15.0	1.55E+001 -6.72E-001	1.02E+001 -1.27E+000	7.39E+000 -1.90E+000	4.45E+000 -3.59E+000	2.75E+000 -6.49E+000	1.5[illegible]E+000 -1.[illegible]E+001

Table A2.- Continued.

MAGNITUDE ERROR, %
(∂θ/∂r =100.000 deg/m)

∂u/∂r (1/sec)	COUPLING ANGLE (deg) 30	45	60	90	120	150
0.5	5.46E-001 -3.08E+000	6.58E-001 -1.92E+000	7.88E-001 -1.31E+000	1.15E+000 -6.60E-001	1.80E+000 -2.95E-001	3.58E+000 -5.08E-002
1.0	9.99E-001 -3.04E+000	1.05E+000 -1.80E+000	1.16E+000 -1.18E+000	1.51E+000 -5.13E-001	2.17E+000 -1.63E-001	4.04E+000 1.64E-005
3.0	3.48E+000 -3.48E+000	3.08E+000 -1.84E+000	3.00E+000 -1.02E+000	3.24E+000 -2.45E-001	4.02E+000 2.78E-005	6.55E+000 -4.21E-001
6 0	7.84E+000 -4.69E+000	6.56E+000 -2.27E+000	6.11E+000 -1.12E+000	6.13E+000 -1.33E-001	7.14E+000 -8.10E-002	1.09E+001 -1.56E+000
9.0	1.24E+001 -5.95E+000	1.02E+001 -2.81E+000	9.29E+000 -1.29E+000	9.08E+000 -9.08E-002	1.04E+001 -2.47E-001	1.55E+001 -2.82E+000
12.0	1.70E+001 -7.18E+000	1.38E+001 -3.33E+000	1.25E+001 -1.49E+000	1.21E+001 -7.46E-002	1.36E+001 -4.20E-001	2.02E+001 -4.01E+000
15.0	2.17E+001 -8.38E+000	1.75E+001 -3.85E+000	1.58E+001 -1.68E+000	1.51E+001 -5.81E-002	1.68E+001 -5.81E-001	2.50E+001 -5.23E+000

ANGULAR ERROR, deg
(∂θ/∂r =100.000 deg/m)

∂u/∂r (1/sec)	COUPLING ANGLE (deg) 30	45	60	90	120	150
0 5	1 61E+000 -3.01E-001	1.39E+000 -9.65E-002	1.19E+000 -1.75E-002	1.02E+000 -1.72E-002	1.01E+000 -1.77E-001	1.28E+000 -7.65E-001
1.0	2.17E+000 -1.65E-001	1.61E+000 -2.89E-002	1.34E+000 0.00E+000	1.08E+000 -7.30E-002	1.00E+000 -3.23E-001	1.15E+000 -1.12E+000
3.0	3.99E+000 0 00E+000	2.76E+000 -3.79E-002	2.14E+000 -1.42E-001	1.49E+000 -4.76E-001	1.15E+000 -1.11E+000	9 99E-001 -2.87E+000
6.0	6.97E+000 -8.37E-002	4.68E+000 -2.86E-001	3.50E+000 -5.36E-001	2.26E+000 -1.22E+000	1.56E+000 -2.44E+000	1.10E+000 -5.76E+000
9.0	9.95E+000 -2.49E-001	6.59E+000 -5.74E-001	4.87E+000 -9.68E-001	3.03E+000 -2.00E+000	1.99E+000 -3.79E+000	1.26E+000 -8.63E+000
12.0	1.29E+001 -4.31E-001	8.47E+000 -8.74E-001	6.21E+000 -1.40E+000	3.81E+000 -2.75E+000	2.43E+000 -5.10E+000	1.46E+000 -1.14E+001
15.0	1 57E+001 -6.06E-001	1.03E+001 -1.18E+000	7.51E+000 -1.81E+000	4.56E+000 -3.49E+000	2.87E+000 -6.39E+000	1.65E+000 -1.41E+001

Table A2.- Concluded.

MAGNITUDE ERROR, %
(∂θ/∂r =120.000 deg/m)

∂u/∂r	COUPLING ANGLE (deg)					
(1/sec)	30	45	60	90	120	150
0.5	5.84E-001 -3.73E+000	7.19E-001 -2.33E+000	8.84E-001 -1.61E+000	1.32E+000 -8.34E-001	2.10E+000 -3.94E-001	4 22E+000 -9.26E-002
1 0	1.00E+000 -3 65E+000	1.09E+000 -2.20E+000	1.23E+000 -1.45E+000	1 66E+000 -6.67E-001	2.44E+000 -2.39E-001	4.64E+000 -1.34E-003
3.0	3.36E+000 -3.99E+000	3.04E+000 -2.15E+000	3.00E+000 -1 24E+000	3.33E+000 -3 40E-001	4.23E+000 -5.93E-003	7.03E+000 -2.95E-001
6.0	7 62E+000 -5 10E+000	6.47E+000 -2.54E+000	6.07E+000 -1.29E+000	6.18E+000 -1.93E-001	7.31E+000 -5 00E-002	1 14E+001 -1.38E+000
9 0	1.22E+001 -6 36E+000	1.00E+001 -3.04E+000	9.23E+000 -1.44E+000	9 11E+000 -1 19E-001	1 05E+001 -1.80E-001	1.59E+001 -2.59E+000
12 0	1 68E+001 -7.59E+000	1 37E+001 -3.57E+000	1.24E+001 -1.62E+000	1 21E+001 -1.04E-001	1 37E+001 -3.56E-001	2.06E+001 -3.76E+000
15 0	2 15E+001 -8.79E+000	1.74E+001 -4 08E+000	1.57E+001 -1.82E+000	1.51E+001 -8.94E-002	1.70E+001 -5.20E-001	2.54E+001 -4.94E+000

ANGULAR ERROR, deg
(∂θ/∂r =120.000 deg/m)

∂u/∂r	COUPLING ANGLE (deg)					
(1/sec)	30	45	60	90	120	150
0 5	2.11E+000 -4 01E-001	1.63E+000 -1.35E-001	1 40E+000 -3 12E-002	1.22E+000 -1.46E-002	1 23E+000 -1.88E-001	1.57E+000 -8.51E-001
1.0	2.46E+000 -2.42E-001	1.84E+000 -5.83E-002	1 54E+000 -4 43E-004	1.27E+000 -5.89E-002	1.20E+000 -3 20E-001	1 42E+000 -1 18E+000
3.0	4.22E+000 -5.92E-003	2.94E+000 -1.84E-002	2.31E+000 -1 02E-001	1.65E+000 -4.26E-001	1 31E+000 -1.06E+000	1.20E+000 -2 67E+000
6.0	7 17E+000 -5.08E-002	4 84E+000 -2 22E-001	3.64E+000 -4.74E-001	2.39E+000 -1 16E+000	1.69E+000 -2.37E+000	1.26E+000 -5.69E+000
9.0	1.01E+001 -1 81E-001	6.74E+000 -5.09E-001	5.01E+000 -8.86E-001	3.16E+000 -1.91E+000	2.12E+000 -3.70E+000	1 40E+000 -8.53E+000
12 0	1 30E+001 -3.63E-001	8.60E+000 -7.87E-001	6.35E+000 -1.31E+000	3.92E+000 -2.66E+000	2.55E+000 -5.00E+000	1.59E+000 -1 13E+001
15 0	1.58E+001 -5.38E-001	1.04E+001 -1.09E+000	7.65E+000 -1.73E+000	4.68E+000 -3.39E+000	2.99E+000 -6.29E+000	1.78E+000 -1.40E+001

Table A3.- Variation of magnitude error and angular error with coupling angle, $\partial u/\partial r$, and $\partial\theta/\partial r$ for Δr = 3.0 cm.

MAGNITUDE ERROR, %
($\partial\theta/\partial r$ = 1.000 deg/m)

$\partial u/\partial r$	COUPLING ANGLE (deg)					
(1/sec)	30	45	60	90	120	150
0.5	2.21E+000 -7.86E-001	1.79E+000 -3.34E-001	1.60E+000 -1.30E-001	1.50E+000 1.41E-005	1.63E+000 -1.00E-001	2.30E+000 -6.96E-001
1.0	4.48E+000 -1.51E+000	3.60E+000 -6.34E-001	3.22E+000 -2.43E-001	3.00E+000 1.45E-005	3.25E+000 -2.13E-001	4.58E+000 -1.42E+000
3.0	1.37E+001 -4.22E+000	1.09E+001 -1.79E+000	9.71E+000 -6.77E-001	9.00E+000 1.63E-005	9.74E+000 -6.47E-001	1.38E+001 -4.14E+000
6.0	2.81E+001 -7.93E+000	2.21E+001 -3.39E+000	1.95E+001 -1.27E+000	1.80E+001 1.91E-005	1.95E+001 -1.24E+000	2.81E+001 -7.83E+000
9 0	4.28E+001 -1.11E+001	3.34E+001 -4.81E+000	2 93E+001 -1.79E+000	2.70E+001 2.21E-005	2.93E+001 -1.77E+000	4.29E+001 -1.11E+001
12.0	5.79E+001 -1.38E+001	4.47E+001 -6.05E+000	3.92E+001 -2.26E+000	3.60E+001 2.54E-005	3.92E+001 -2.22E+000	5.80E+001 -1.37E+001
15.0	7 35E+001 -1.64E+001	5.63E+001 -7.17E+000	4.91E+001 -2.74E+000	4.50E+001 2.88E-005	4.91E+001 -2.69E+000	7.36E+001 -1.63E+001

ANGULAR ERROR, deg
($\partial\theta/\partial r$ = 1.000 deg/m)

$\partial u/\partial r$	COUPLING ANGLE (deg)					
(1/sec)	30	45	60	90	120	150
0 5	1 61E+000 -9.93E-002	1.05E+000 -1.61E-001	7.54E-001 -2.31E-001	4 42E-001 -4.12E-001	2.61E-001 -7.24E-001	1.29E-001 -1.58E+000
1 0	3.17E+000 -2.12E-001	2.06E+000 -3.32E-001	1.48E+000 -4.74E-001	8.62E-001 -8.32E-001	5.04E-001 -1.45E+000	2.42E-001 -3.14E+000
3.0	9.21E+000 -6.46E-001	5.97E+000 -9.97E-001	4.28E+000 -1.41E+000	2.48E+000 -2.45E+000	1.44E+000 -4.25E+000	6.76E-001 -9.17E+000
6.0	1.76E+001 -1.25E+000	1.14E+001 -1.94E+000	8.21E+000 -2.71E+000	4.73E+000 -4.71E+000	2.74E+000 -8.17E+000	1.28E+000 -1.75E+001
9.0	2.51E+001 -1.81E+000	1 64E+001 -2.81E+000	1.18E+001 -3.91E+000	6.84E+000 -6.80E+000	3.94E+000 -1.18E+001	1.84E+000 -2.50E+001
12 0	3.20E+001 -2.33E+000	2.10E+001 -3.62E+000	1.51E+001 -5.02E+000	8.79E+000 -8.75E+000	5.05E+000 -1.51E+001	2.36E+000 -3.19E+001
15.0	3.82E+001 -2.80E+000	2.52E+001 -4.38E+000	1.82E+001 -6.07E+000	1.06E+001 -1.06E+001	6.11E+000 -1.82E+001	2.83E+000 -3.81E+001

Table A3.- Continued.

MAGNITUDE ERROR, %
(∂θ/∂r = 5.000 deg/m)

∂u/∂r	COUPLING ANGLE (deg)					
(1/sec)	30	45	60	90	120	150
0.5	2.05E+000 -9.93E-001	1.69E+000 -4.53E-001	1.55E+000 -2.05E-001	1.51E+000 -1.16E-002	1.71E+000 -5.23E-002	2.51E+000 -5.36E-001
1.0	4.31E+000 -1.70E+000	3.51E+000 -7.51E-001	3.16E+000 -3.07E-001	3.00E+000 -6.26E-004	3.31E+000 -1.53E-001	4.77E+000 -1.24E+000
3.0	1.35E+001 -4 43E+000	1.08E+001 -1.91E+000	9.64E+000 -7.36E-001	9.00E+000 4.07E-004	9.81E+000 -5 87E-001	1.40E+001 -3 97E+000
6.0	2 79E+001 -8.13E+000	2.20E+001 -3.50E+000	1.94E+001 -1.33E+000	1.80E+001 4 77E-004	1.96E+001 -1.18E+000	2.83E+001 -7.62E+000
9.0	4.26E+001 -1 13E+001	3.32E+001 -4.92E+000	2.92E+001 -1 85E+000	2.70E+001 5.53E-004	2.94E+001 -1 71E+000	4.31E+001 -1.09E+001
12.0	5 77E+001 -1.40E+001	4.46E+001 -6 15E+000	3.91E+001 -2.34E+000	3 60E+001 6.34E-004	3 93E+001 -2.17E+000	5.82E+001 -1.36E+001
15.0	7.33E+001 -1.67E+001	5.62E+001 -7.32E+000	4.90E+001 -2.83E+000	4.50E+001 7 21E-004	4.92E+001 -2 60E+000	7.38E+001 -1.61E+001

ANGULAR ERROR, deg
(∂θ/∂r = 5.000 deg/m)

∂u/∂r	COUPLING ANGLE (deg)					
(1/sec)	30	45	60	90	120	150
0.5	1.68E+000 -5 21E-002	1.11E+000 -1.08E-001	8.22E-001 -1 78E-001	5.09E-001 -3.58E-001	3 29E-001 -6.70E-001	2.03E-001 -1.53E+000
1 0	3.25E+000 -1.51E-001	2.13E+000 -2.80E-001	1.55E+000 -4.14E-001	9.24E-001 -7.72E-001	5 66E-001 -1 39E+000	3.04E-001 -3.08E+000
3.0	9 29E+000 -5.86E-001	6.04E+000 -9.38E-001	4.35E+000 -1 35E+000	2.54E+000 -2 39E+000	1.50E+000 -4.19E+000	7.36E-001 -9 09E+000
6.0	1.77E+001 -1.19E+000	1.15E+001 -1.87E+000	8.28E+000 -2.65E+000	4.81E+000 -4.65E+000	2.80E+000 -8.10E+000	1 34E+000 -1.74E+001
9.0	2.52E+001 -1.75E+000	1 65E+001 -2.74E+000	1.19E+001 -3 85E+000	6 91E+000 -6.73E+000	4.00E+000 -1.17E+001	1.90E+000 -2.49E+001
12 0	3.21E+001 -2.27E+000	2.11E+001 -3.55E+000	1.52E+001 -4.96E+000	8.86E+000 -8.68E+000	5.13E+000 -1.50E+001	2.41E+000 -3.18E+001
15.0	3.83E+001 -2.74E+000	2.53E+001 -4.31E+000	1.83E+001 -6 00E+000	1.07E+001 -1.05E+001	6.19E+000 -1.81E+001	2.69E+000 -3.80E+001

Table A3.- Continued.

MAGNITUDE ERROR, %
(∂θ/∂r = 10.000 deg/m)

∂u/∂r (1/sec)	COUPLING ANGLE (deg) 30	45	60	90	120	150
0.5	1.89E+000 -1.29E+000	1.61E+000 -6.31E-001	1.52E+000 -3.20E-001	1.54E+000 -4.54E-002	1.82E+000 -1.51E-002	2.80E+000 -3.75E-001
1.0	4.12E+000 -1.97E+000	3.39E+000 -9.04E-001	3.11E+000 -4.09E-001	3.02E+000 -2.37E-002	3.42E+000 -1.02E-001	5.04E+000 -1.05E+000
3.0	1.33E+001 -4.69E+000	1.07E+001 -2 05E+000	9.56E+000 -8.12E-001	9.00E+000 1.63E-003	9.89E+000 -5.12E-001	1.43E+001 -3.75E+000
6.0	2.76E+001 -8.39E+000	2.18E+001 -3.64E+000	1.93E+001 -1.40E+000	1.80E+001 1.91E-003	1.97E+001 -1.11E+000	2.86E+001 -7.36E+000
9.0	4.24E+001 -1 16E+001	3.31E+001 -5.05E+000	2.91E+001 -1.94E+000	2.70E+001 2.21E-003	2.95E+001 -1.64E+000	4.34E+001 -1.06E+001
12 0	5.75E+001 -1.43E+001	4.44E+001 -6.27E+000	3.90E+001 -2.45E+000	3.60E+001 2.54E-003	3.94E+001 -2.10E+000	5.85E+001 -1.34E+001
15.0	7.30E+001 -1.70E+001	5.60E+001 -7.50E+000	4.90E+001 -2.94E+000	4.50E+001 2.88E-003	4.93E+001 -2.50E+000	7.40E+001 -1.58E+001

ANGULAR ERROR, deg
(∂θ/∂r = 10.000 deg/m)

∂u/∂r (1/sec)	COUPLING ANGLE (deg) 30	45	60	90	120	150
0.5	1.80E+000 -1.51E-002	1.22E+000 -6.04E-002	9.21E-001 -1.25E-001	6.03E-001 -3.01E-001	4.27E-001 -6.16E-001	3.16E-001 -1.48E+000
1.0	3.35E+000 -1.02E-001	2.22E+000 -2.14E-001	1.64E+000 -3.53E-001	1.01E+000 -7.08E-001	6.55E-001 -1.33E+000	4.04E-001 -3.02E+000
3.0	9.39E+000 -5.10E-001	6.12E+000 -8.72E-001	4.44E+000 -1.27E+000	2.62E+000 -2.32E+000	1.57E+000 -4 12E+000	8 09E-001 -8 93E+000
6.0	1.78E+001 -1.12E+000	1.16E+001 -1.79E+000	8.37E+000 -2.58E+000	4.89E+000 -4.57E+000	2.88E+000 -8.01E+000	1.41E+000 -1.73E+001
9.0	2.54E+001 -1.68E+000	1.66E+001 -2.65E+000	1 20E+001 -3.78E+000	7.00E+000 -6.64E+000	4.09E+000 -1.16E+001	1.97E+000 -2 48E+001
12.0	3.22E+001 -2.19E+000	2.12E+001 -3.47E+000	1.53E+001 -4.89E+000	8.95E+000 -8.59E+000	5.22E+000 -1.49E+001	2.49E+000 -3.16E+001
15.0	3.85E+001 -2.67E+000	2.54E+001 -4.22E+000	1.84E+001 -5.91E+000	1.08E+001 -1.04E+001	6.28E+000 -1 80E+001	2.96E+000 -3.78E+001

Table A3.- Continued.

MAGNITUDE ERROR, %
($\partial\theta/\partial r$ = 20.000 deg/m)

$\partial u/\partial r$	COUPLING ANGLE (deg)					
(1/sec)	30	45	60	90	120	150
0.5	1.67E+000 -1.99E+000	1.52E+000 -1.07E+000	1.50E+000 -6.11E-001	1.66E+000 -1.66E-001	2.11E+000 -1.36E-003	3.50E+000 -1.56E-001
1.0	3.79E+000 -2.57E+000	3.22E+000 -1.27E+000	3.03E+000 -6.42E-001	3.09E+000 -9.27E-002	3.65E+000 -2.84E-002	5.63E+000 -7.30E-001
3.0	1 29E+001 -5.22E+000	1.04E+001 -2.34E+000	9.45E+000 -1.02E+000	9.03E+000 -3.02E-002	1.01E+001 -3.76E-001	1.48E+001 -3.32E+000
6.0	2.72E+001 -8.88E+000	2.15E+001 -3.91E+000	1.92E+001 -1.60E+000	1.80E+001 7.63E-003	1.99E+001 -9.60E-001	2.91E+001 -6.91E+000
9.0	4 18E+001 -1 20E+001	3.28E+001 -5.31E+000	2.90E+001 -2.15E+000	2.70E+001 8.84E-003	2.97E+001 -1.50E+000	4 39E+001 -1.01E+001
12 0	5.70E+001 -1.49E+001	4 42E+001 -6 64E+000	3.89E+001 -2 67E+000	3 60E+001 1.01E-002	3.96E+001 -1.97E+000	5.91E+001 -1.29E+001
15.0	7.25E+001 -1.75E+001	5.58E+001 -7.86E+000	4.88E+001 -3 15E+000	4 50E+001 1 15E-002	4.95E+001 -2.38E+000	7.45E+001 -1.52E+001

ANGULAR ERROR, deg
($\partial\theta/\partial r$ = 20.000 deg/m)

$\partial u/\partial r$	COUPLING ANGLE (deg)					
(1 sec)	30	45	60	90	120	150
0 5	2.10E+000 -1 35E-003	1 47E+000 -1 03E-002	1.15E+000 -5 28E-002	8.23E-001 -2.17E-001	6.56E-001 -5.41E-001	6.01E-001 -1 46E+000
1 0	3.59E+000 -2.86E-002	2 43E+000 -1.17E-001	1 83E+000 -2 46E-001	1 20E+000 -5 94E-001	8 51E-001 -1.22E+000	6.31E-001 -2.93E+000
3 0	9.62E+000 -3.84E-001	6 32E+000 -7.39E-001	4.62E+000 -1.13E+000	2 80E+000 -2.16E+000	1 75E+000 -3.96E+000	1.00E+000 -8 83E+000
6 0	1.80E+001 -9 63E-001	1.18E+001 -1.65E+000	8.55E+000 -2.43E+000	5.07E+000 -4.42E+000	3.06E+000 -7.84E+000	1.57E+000 -1.71E+001
9 0	2.57E+001 -1.52E+000	1.68E+001 -2.49E+000	1.22E+001 -3.63E+000	7.17E+000 -6.49E+000	4.27E+000 -1.14E+001	2.11E+000 -2.46E+001
12 0	3.25E+001 -2.04E+000	2.14E+001 -3.29E+000	1.55E+001 -4.74E+000	9.12E+000 -6.41E+000	5.40E+000 -1 47E+001	2.63E+000 -3.13E+001
15 0	3.88E+001 -2.52E+000	2.57E+001 -4 05E+000	1.86E+001 -5.76E+000	1.09E+001 -1.02E+001	6.46E+000 -1.78E+001	3.10E+000 -3.74E+001

Table A3.- Continued.

MAGNITUDE ERROR, % (∂θ/∂r = 40.000 deg/m)						
∂u/∂r	COUPLING ANGLE (deg)					
(1/sec)	30	45	60	90	120	150
0.5	1.51E+000 -3.66E+000	1.52E+000 -2.14E+000	1.63E+000 -1.35E+000	2.04E+000 -5.46E-001	2.84E+000 -1.36E-001	5.16E+000 9.41E-004
1.0	3.36E+000 -3.99E+000	3.04E+000 -2.15E+000	3.00E+000 -1.24E+000	3.33E+000 -3.40E-001	4.23E+000 -5.93E-003	7.03E+000 -2.95E-001
3.0	1.22E+001 -6.36E+000	1.00E+001 -3.04E+000	9.23E+000 -1.44E+000	9.11E+000 -1.19E-001	1.05E+001 -1.80E-001	1.59E+001 -2.59E+000
6.0	2.63E+001 -9.95E+000	2.11E+001 -4.59E+000	1.89E+001 -2.01E+000	1.81E+001 -7.40E-002	2.02E+001 -6.72E-001	3.02E+001 -6.10E+000
9.0	4.10E+001 -1.32E+001	3.23E+001 -6.02E+000	2.87E+001 -2.56E+000	2.70E+001 -2.56E-002	3.01E+001 -1.20E+000	4.49E+001 -9.11E+000
12.0	5.61E+001 -1.61E+001	4.37E+001 -7.34E+000	3.86E+001 -3.08E+000	3.60E+001 2.64E-002	4.00E+001 -1.69E+000	6.01E+001 -1.20E+001
15.0	7.15E+001 -1.85E+001	5.52E+001 -8.55E+000	4.85E+001 -3.55E+000	4.50E+001 4.61E-002	4.99E+001 -2.12E+000	7.56E+001 -1.44E+001

ANGULAR ERROR, deg (∂θ/∂r = 40.000 deg/m)						
∂u/∂r	COUPLING ANGLE (deg)					
(1/sec)	30	45	60	90	120	150
0.5	2.86E+000 -1.37E-001	2.09E+000 -1.66E-002	1.71E+000 0.00E+000	1.34E+000 -1.29E-001	1.20E+000 -4.82E-001	1.32E+000 -1.56E+000
1.0	4.22E+000 -5.92E-003	2.94E+000 -1.84E-002	2.31E+000 -1.02E-001	1.65E+000 -4.26E-001	1.31E+000 -1.06E+000	1.20E+000 -2.87E+000
3.0	1.01E+001 -1.81E-001	6.74E+000 -5.09E-001	5.01E+000 -8.86E-001	3.16E+000 -1.91E+000	2.12E+000 -3.70E+000	1.40E+000 -8.52E+000
6.0	1.86E+001 -7.08E-001	1.22E+001 -1.39E+000	8.93E+000 -2.13E+000	5.42E+000 -4.11E+000	3.41E+000 -7.54E+000	1.97E+000 -1.67E+001
9.0	2.63E+001 -1.21E+000	1.73E+001 -2.22E+000	1.26E+001 -3.32E+000	7.52E+000 -6.19E+000	4.62E+000 -1.11E+001	2.52E+000 -2.41E+001
12.0	3.32E+001 -1.73E+000	2.19E+001 -2.99E+000	1.59E+001 -4.43E+000	9.47E+000 -8.09E+000	5.76E+000 -1.44E+001	3.03E+000 -3.07E+001
15.0	3.95E+001 -2.21E+000	2.61E+001 -3.70E+000	1.91E+001 -5.46E+000	1.13E+001 -9.86E+000	6.81E+000 -1.74E+001	3.51E+000 -3.68E+001

Table A3.- Continued.

MAGNITUDE ERROR, %
($\partial\theta/\partial r$ = 60.000 deg/m)

$\partial u/\partial r$ (1/sec)	COUPLING ANGLE (deg) 30	45	60	90	120	150
0.5	1.50E+000 -5.49E+000	1.63E+000 -3.32E+000	1.84E+000 -2.19E+000	2.49E+000 -1.01E+000	3.67E+000 -3.65E-001	6.98E+000 -5.79E-003
1.0	3.14E+000 -5.62E+000	2.99E+000 -3.18E+000	3.10E+000 -1.96E+000	3.68E+000 -7.01E-001	4.94E+000 -1.15E-001	8.65E+000 -9.14E-002
3.0	1.15E+001 -7.61E+000	9.72E+000 -3.83E+000	9.10E+000 -1.95E+000	9.27E+000 -3.00E-001	1.10E+001 -6.52E-002	1.72E+001 -1.96E+000
6.0	2.55E+001 -1.11E+001	2.06E+001 -5.28E+000	1.87E+001 -2.41E+000	1.81E+001 -1.63E-001	2.07E+001 -4.86E-001	3.13E+001 -5.23E+000
9.0	4.01E+001 -1.43E+001	3.18E+001 -6.71E+000	2.84E+001 -2.95E+000	2.71E+001 -1.29E-001	3.04E+001 -9.01E-001	4.61E+001 -8.36E+000
12.0	5.52E+001 -1.71E+001	4.31E+001 -8.01E+000	3.83E+001 -3.46E+000	3.61E+001 -9.17E-002	4.04E+001 -1.38E+000	6.12E+001 -1.10E+001
15.0	7.05E+001 -1.94E+001	5.46E+001 -9.19E+000	4.81E+001 -3.92E+000	4.50E+001 -5.22E-002	5.03E+001 -1.83E+000	7.68E+001 -1.35E+001

ANGULAR ERROR, deg
($\partial\theta/\partial r$ = 60.000 deg/m)

$\partial u/\partial r$ (1/sec)	COUPLING ANGLE (deg) 30	45	60	90	120	150
0.5	3.71E+000 -3.74E-001	2.77E+000 -9.10E-002	2.32E+000 -1.92E-003	1.90E+000 -8.62E-002	1.80E+000 -4.73E-001	2.13E+000 -1.75E+000
1.0	4.96E+000 -1.17E-001	3.55E+000 0.00E+000	2.85E+000 -3.21E-002	2.15E+000 -3.21E-001	1.84E+000 -9.83E-001	1.89E+000 -2.91E+000
3.0	1.07E+001 -6.68E-002	7.21E+000 -3.17E-001	5.43E+000 -6.84E-001	3.56E+000 -1.69E+000	2.53E+000 -3.48E+000	1.89E+000 -8.32E+000
6.0	1.92E+001 -5.02E-001	1.27E+001 -1.12E+000	9.34E+000 -1.88E+000	5.79E+000 -3.84E+000	3.76E+000 -7.23E+000	2.35E+000 -1.63E+001
9.0	2.69E+001 -9.82E-001	1.77E+001 -1.95E+000	1.30E+001 -3.02E+000	7.88E+000 -5.88E+000	4.97E+000 -1.08E+001	2.90E+000 -2.35E+001
12.0	3.39E+001 -1.42E+000	2.24E+001 -2.72E+000	1.64E+001 -4.12E+000	9.84E+000 -7.78E+000	6.10E+000 -1.40E+001	3.42E+000 -3.02E+001
15.0	4.02E+001 -1.88E+000	2.67E+001 -3.43E+000	1.95E+001 -5.16E+000	1.17E+001 -9.53E+000	7.16E+000 -1.70E+001	3.91E+000 -3.62E+001

Table A3.- Continued.

MAGNITUDE ERROR, %
($\partial\theta/\partial r$ = 80.000 deg/m)

$\partial u/\partial r$	COUPLING ANGLE (deg)					
(1/sec)	30	45	60	90	120	150
0.5	1.55E+000 -7.39E+000	1.79E+000 -4.54E+000	2.09E+000 -3.07E+000	2.96E+000 -1.51E+000	4.53E+000 -6.36E-001	8.87E+000 -8.49E-002
1.0	3.03E+000 -7.37E+000	3.04E+000 -4.31E+000	3.26E+000 -2.75E+000	4.08E+000 -1.12E+000	5.71E+000 -2.90E-001	1.04E+001 2.64E-003
3.0	1.10E+001 -9.00E+000	9.45E+000 -4.66E+000	9.03E+000 -2.53E+000	9.48E+000 -5.24E-001	1.15E+001 1.66E-003	1.85E+001 -1.43E+000
6.0	2.47E+001 -1.23E+001	2.02E+001 -6.01E+000	1.85E+001 -2.93E+000	1.82E+001 -2.90E-001	2.11E+001 -2.82E-001	3.25E+001 -4.59E+000
9.0	3.92E+001 -1.54E+001	3.13E+001 -7.36E+000	2.82E+001 -3.40E+000	2.72E+001 -2.14E-001	3.09E+001 -7.27E-001	4.72E+001 -7.56E+000
12.0	5.42E+001 -1.82E+001	4.26E+001 -8.64E+000	3.80E+001 -3.85E+000	3.61E+001 -1.90E-001	4.07E+001 -1.07E+000	6.23E+001 -1.01E+001
15.0	6.97E+001 -2.08E+001	5.40E+001 -9.78E+000	4.78E+001 -4.29E+000	4.51E+001 -1.64E-001	5.07E+001 -1.51E+000	7.79E+001 -1.26E+001

ANGULAR ERROR, deg
($\partial\theta/\partial r$ = 80.000 deg/m)

$\partial u/\partial r$	COUPLING ANGLE (deg)					
(1/sec)	30	45	60	90	120	150
0.5	4.61E+000 -6.68E-001	3.48E+000 -1.92E-001	2.94E+000 -3.00E-002	2.48E+000 -6.44E-002	2.42E+000 -4.88E-001	2.95E+000 -1.96E+000
1.0	5.79E+000 -3.00E-001	4.20E+000 -3.87E-002	3.43E+000 0.00E+000	2.69E+000 -2.47E-001	2.41E+000 -9.35E-001	2.64E+000 -3.03E+000
3.0	1.14E+001 0.00E+000	7.73E+000 -1.89E-001	5.90E+000 -5.08E-001	4.00E+000 -1.49E+000	2.97E+000 -3.28E+000	2.42E+000 -8.16E+000
6.0	1.98E+001 -2.90E-001	1.31E+001 -9.20E-001	9.75E+000 -1.63E+000	6.18E+000 -3.58E+000	4.17E+000 -6.97E+000	2.81E+000 -1.59E+001
9.0	2.76E+001 -7.72E-001	1.82E+001 -1.67E+000	1.34E+001 -2.77E+000	8.28E+000 -5.57E+000	5.35E+000 -1.04E+001	3.27E+000 -2.31E+001
12.0	3.46E+001 -1.21E+000	2.29E+001 -2.45E+000	1.68E+001 -3.81E+000	1.02E+001 -7.47E+000	6.46E+000 -1.36E+001	3.79E+000 -2.97E+001
15.0	4.10E+001 -1.61E+000	2.72E+001 -3.16E+000	1.99E+001 -4.84E+000	1.21E+001 -9.23E+000	7.50E+000 -1.67E+001	4.28E+000 -3.56E+001

Table A3.- Continued.

MAGNITUDE ERROR, %
(∂θ/∂r =100.000 deg/m)

∂u/∂r	COUPLING ANGLE (deg)					
(1/sec)	30	45	60	90	120	150
0.5	1.64E+000 -9.32E+000	1.95E+000 -5.79E+000	2.36E+000 -3.97E+000	3.45E+000 -2.02E+000	5.40E+000 -9.22E-001	1.08E+001 -1.81E-001
1.0	2.98E+000 -9.18E+000	3.13E+000 -5.49E+000	3.45E+000 -3.58E+000	4.51E+000 -1.58E+000	6.52E+000 -5.15E-001	1.22E+001 9.63E-004
3.0	1.06E+001 -1.05E+001	9.28E+000 -5.61E+000	8.98E+000 -3.14E+000	9.71E+000 -7.85E-001	1.21E+001 1.77E-003	2.00E+001 -1.06E+000
6.0	2.41E+001 -1.37E+001	1.99E+001 -6.84E+000	1.83E+001 -3.42E+000	1.84E+001 -4.75E-001	2.16E+001 -1.70E-001	3.38E+001 -3.91E+000
9.0	3.85E+001 -1.67E+001	3.09E+001 -8.17E+000	2.80E+001 -3.91E+000	2.72E+001 -3.10E-001	3.14E+001 -5.32E-001	4.84E+001 -6.71E+000
12.0	5.35E+001 -1.95E+001	4.21E+001 -9.42E+000	3.78E+001 -4.38E+000	3.62E+001 -2.68E-001	4.12E+001 -9.13E-001	6.36E+001 -9.43E+000
15.0	6.89E+001 -2.20E+001	5.36E+001 -1.06E+001	4.76E+001 -4.84E+000	4.52E+001 -2.52E-001	5.11E+001 -1.20E+000	7.90E+001 -1.16E+001

ANGULAR ERROR, deg
(∂θ/∂r =100.000 deg/m)

∂u/∂r	COUPLING ANGLE (deg)					
(1/sec)	30	45	60	90	120	150
0.5	5.55E+000 -9.73E-001	4.21E+000 -3.16E-001	3.59E+000 -6.22E-002	3.07E+000 -4.42E-002	3.04E+000 -5.00E-001	3.79E+000 -2.18E+000
1.0	6.67E+000 -5.50E-001	4.89E+000 -1.07E-001	4.03E+000 0.00E+000	3.24E+000 -2.00E-001	2.99E+000 -9.19E-001	3.41E+000 -3.18E+000
3.0	1.21E+001 0.00E+000	8.28E+000 -9.15E-002	6.40E+000 -3.72E-001	4.45E+000 -1.32E+000	3.44E+000 -3.12E+000	2.99E+000 -8.02E+000
6.0	2.05E+001 -1.87E-001	1.37E+001 -7.14E-001	1.02E+001 -1.42E+000	6.58E+000 -3.33E+000	4.57E+000 -6.71E+000	3.27E+000 -1.56E+001
9.0	2.83E+001 -5.51E-001	1.87E+001 -1.45E+000	1.39E+001 -2.52E+000	8.67E+000 -5.31E+000	5.75E+000 -1.01E+001	3.73E+000 -2.27E+001
12.0	3.53E+001 -9.97E-001	2.35E+001 -2.16E+000	1.72E+001 -3.56E+000	1.06E+001 -7.15E+000	6.86E+000 -1.33E+001	4.17E+000 -2.92E+001
15.0	4.18E+001 -1.40E+000	2.78E+001 -2.88E+000	2.04E+001 -4.52E+000	1.25E+001 -8.92E+000	7.92E+000 -1.63E+001	4.64E+000 -3.50E+001

Table A3.- Concluded.

MAGNITUDE ERROR, %
(∂θ/∂r =120.000 deg/m)

∂u/∂r (1/sec)	COUPLING ANGLE (deg) 30	45	60	90	120	150
0.5	1.73E+000 -1.13E+001	2.13E+000 -7.05E+000	2.63E+000 -4.88E+000	3.95E+000 -2.55E+000	6.28E+000 -1.23E+000	1.27E+001 -3.15E-001
1.0	3.01E+000 -1.11E+001	3.24E+000 -6.69E+000	3.68E+000 -4.45E+000	4.97E+000 -2.07E+000	7.36E+000 -7.72E-001	1.40E+001 -3.38E-002
3.0	1.02E+001 -1.20E+001	9.14E+000 -6.59E+000	9.02E+000 -3.84E+000	1.00E+001 -1.12E+000	1.28E+001 -5.50E-002	2.15E+001 -7.03E-001
6.0	2.35E+001 -1.50E+001	1.95E+001 -7.64E+000	1.82E+001 -3.99E+000	1.85E+001 -6.45E-001	2.21E+001 -7.57E-002	3.51E+001 -3.32E+000
9.0	3 78E+001 -1.80E+001	3.05E+001 -8.98E+000	2.78E+001 -4.41E+000	2.74E+001 -5.07E-001	3.18E+001 -3.14E-001	4.97E+001 -6.08E+000
12.0	5.27E+001 -2.08E+001	4.17E+001 -1.02E+001	3.75E+001 -4.89E+000	3.63E+001 -3.59E-001	4.17E+001 -7.27E-001	6.48E+001 -8.65E+000
15.0	6.80E+001 -2.32E+001	5.31E+001 -1.14E+001	4.73E+001 -5.35E+000	4.52E+001 -3.18E-001	5.16E+001 -1.05E+000	8.02E+001 -1.09E+001

ANGULAR ERROR, deg
(∂θ/∂r =120.000 deg/m)

∂u/∂r (1/sec)	COUPLING ANGLE (deg) 30	45	60	90	120	150
0.5	6.50E+000 -1.32E+000	4.96E+000 -4.45E-001	4.24E+000 -1.11E-001	3.66E+000 -3.66E-002	3.67E+000 -5.26E-001	4.62E+000 -2.39E+000
1.0	7.58E+000 -8.21E-001	5.60E+000 -2.04E-001	4.66E+000 -1.15E-002	3.82E+000 -1.60E-001	3.60E+000 -9.05E-001	4.21E+000 -3.33E+000
3.0	1.28E+001 -5.73E-002	8.88E+000 -2.84E-002	6.91E+000 -2.61E-001	4.93E+000 -1.17E+000	3.94E+000 -2.98E+000	3.61E+000 -7.96E+000
6.0	2.12E+001 -7.80E-002	1.42E+001 -5.48E-001	1.07E+001 -1.22E+000	7.02E+000 -3.12E+000	5.00E+000 -6.47E+000	3.76E+000 -1.53E+001
9.0	2.90E+001 -3.77E-001	1.93E+001 -1.25E+000	1.43E+001 -2.25E+000	9.06E+000 -5.05E+000	6.15E+000 -9.84E+000	4.19E+000 -2.23E+001
12.0	3.62E+001 -7 71E-001	2.40E+001 -1.92E+000	1.77E+001 -3.30E+000	1.10E+001 -6.87E+000	7.26E+000 -1.30E+001	4.64E+000 -2.86E+001
15.0	4.25E+001 -1.18E+000	2.83E+001 -2.58E+000	2.09E+001 -4.26E+000	1.28E+001 -8.59E+000	8.32E+000 -1.59E+001	5.07E+000 -3.45E+001

REFERENCES

1. Reinath, M. S.; Orloff, K. L.: and Snyder, P. K.: A Laser Velocimeter System for the Ames 40- by 80-Foot and 80- by 120-Foot Wind Tunnel. AIAA 22nd Aerospace Sciences Mtg., Paper No. AIAA-84-0414, Jan. 1984.

2. Reinath, M. S.; Orloff, K. L.; and Snyder, P. K.: A Laser Velocimeter System for Large-Scale Aerodynamic Testing. NASA TM-84393, 1984.

3. Orloff, K. L.; and Snyder, P.: Laser Doppler Anemometer Measurements Using Nonorthogonal Velocity Components: Error Estimates. Applied Optics, vol. 21, Jan. 1982, pp. 339-344.

4. Snyder, P. K.; Orloff, K. L.; and Reinath, M. S.: Reduction of Flow-Measurement Uncertainties in Laser Velocimeters with Nonorthogonal Channels. AIAA Journal, vol. 22, no. 8, Aug. 1984, pp. 1115-1123.

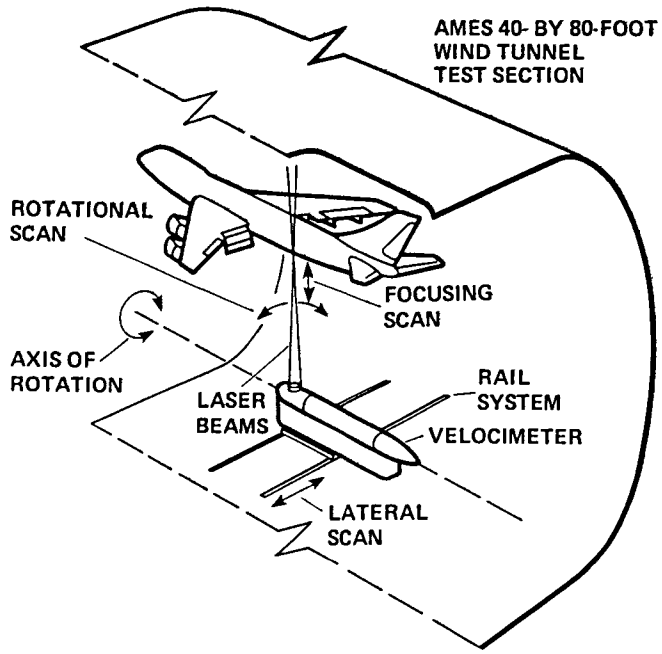

Figure 1.- Wind tunnel application of the velocimeter showing degrees of test-point positioning freedom.

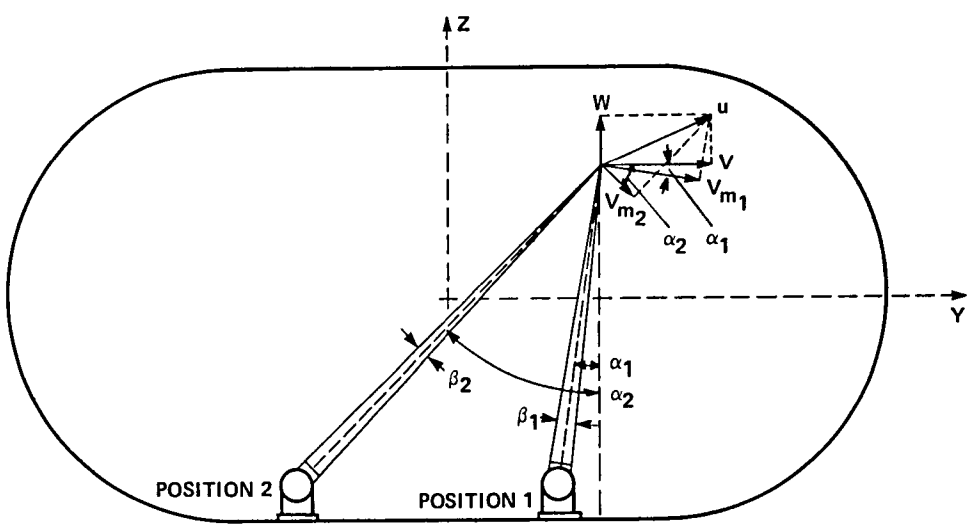

Figure 2.- Method and nomenclature for obtaining orthogonal velocity components from nonorthogonal measurements (u is the velocity vector projection in the Y,Z-plane, and V_{m_1} and V_{m_2} are the measured components).

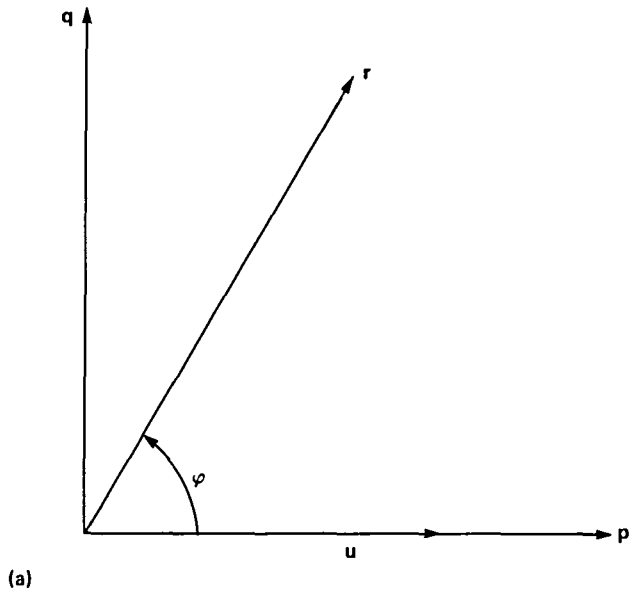

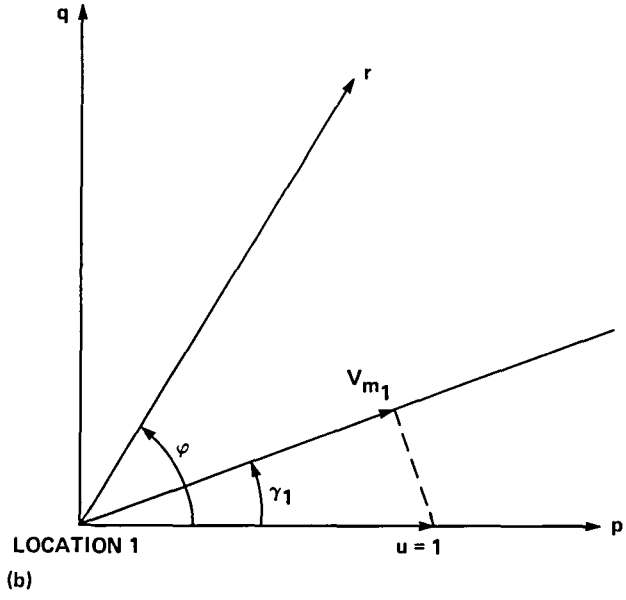

Figure 3.- Coordinate system nomenclature: (a) Basic coordinate system used for development of equations; (b) For the first velocity measurement, the origin is designated as location 1, and the measured component V_{m_1} of the velocity u (magnitude set equal to unity) is shown inclined at γ_1 from the p-axis.

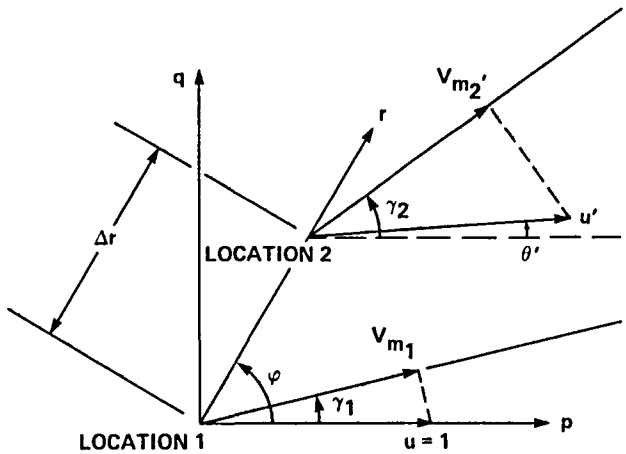

Figure 4.- Velocity-vector diagram showing the two measurement locations, the misalignment distance Δr, and the measured velocity components V_{m_2} and V_{m_1}'.

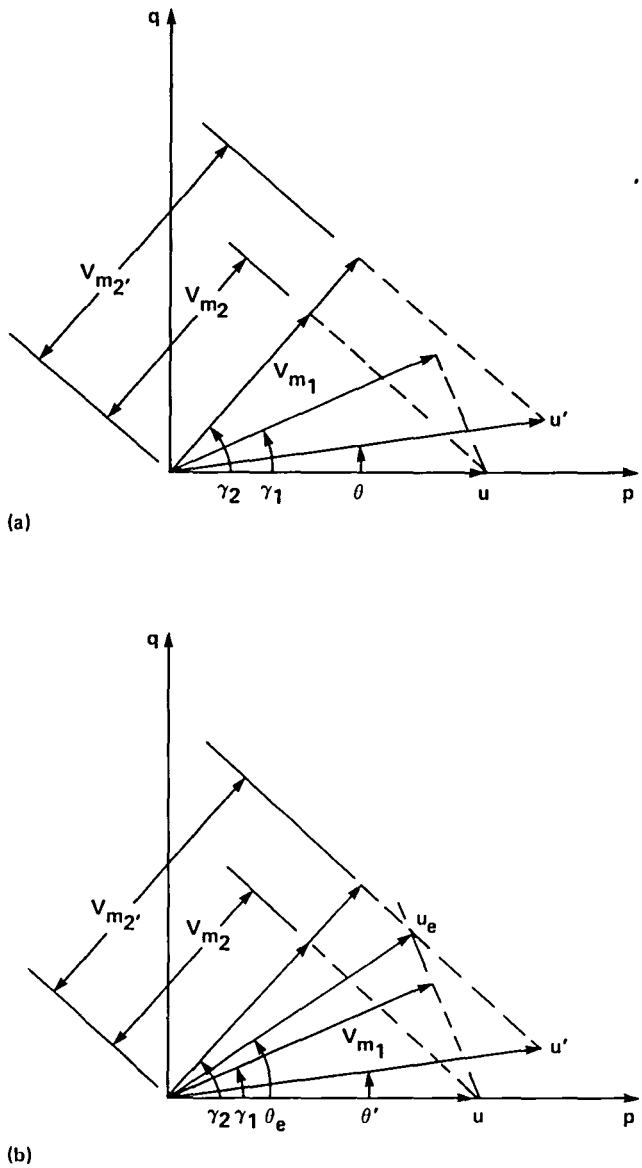

Figure 5.- Velocity-vector diagram showing: (a) The component V_{m_2}' which is in error because of misalignment (misalignment not shown) and the component V_{m_2} for zero misalignment; (b) The resultant velocity-vector u_e and θ_e obtained from the components V_{m_1} and V_{m_2}'.

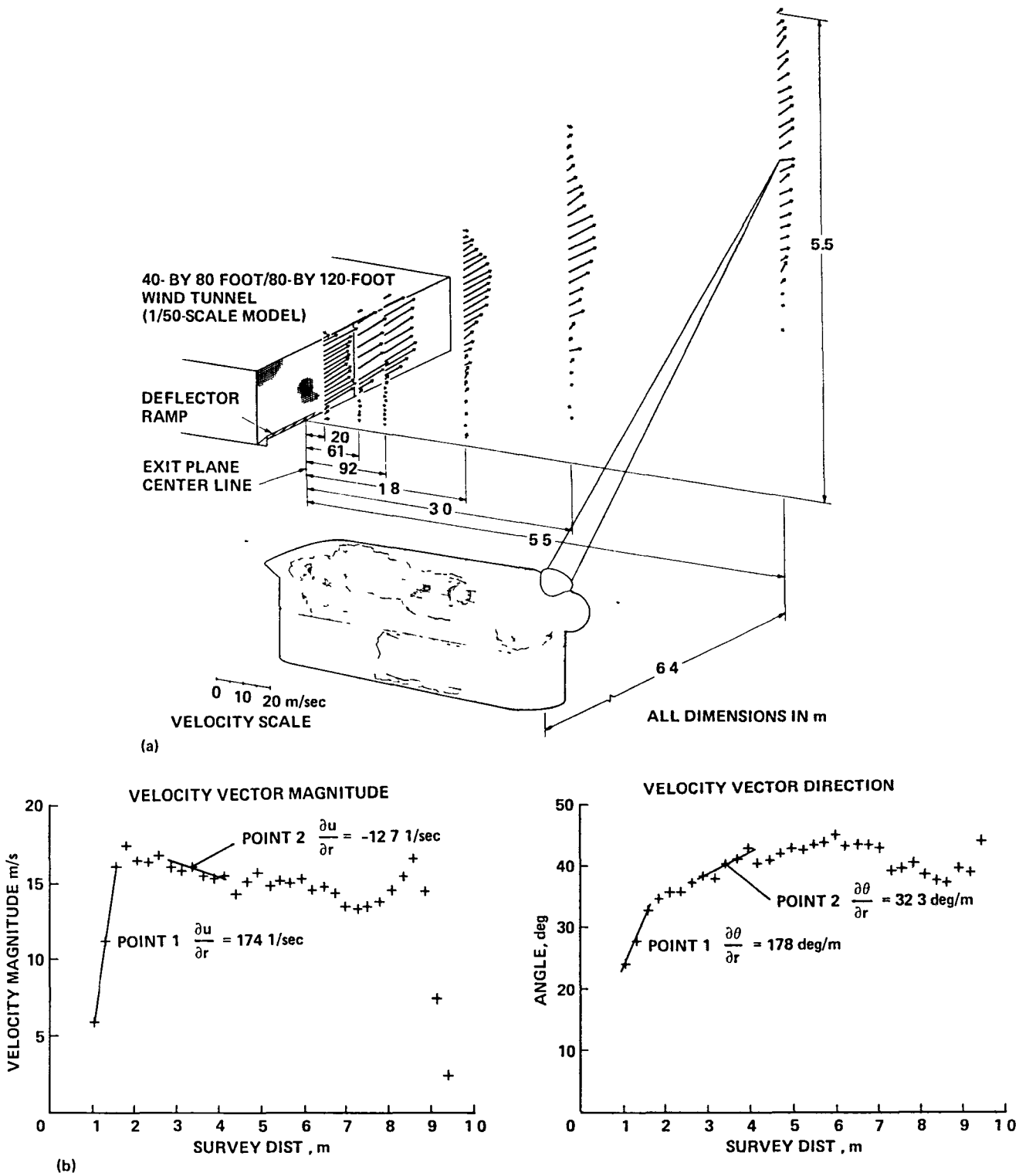

Figure 6.- Velocity measurements made through the open-circuit exhaust flow of a one-fiftieth scale model of the 80- by 120-Foot Wind Tunnel: (a) Diagram showing typical surveys; (b) Velocity-vector magnitude and direction (measured in degrees from the horizontal) for the vertical survey made 0.20 m from the exit plane showing the slopes of the curves at two selected points.

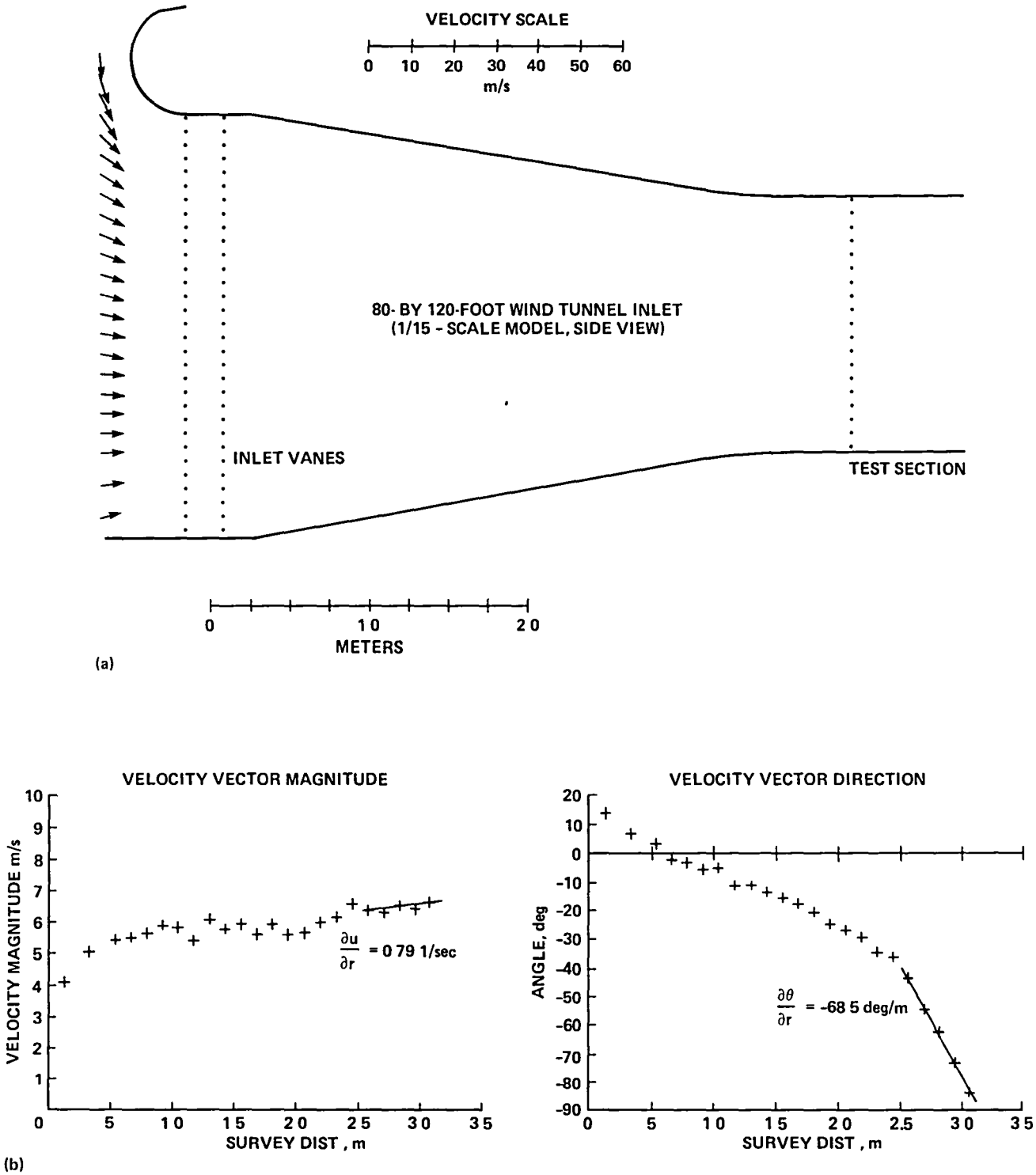

Figure 7.- Velocity measurements made at the inlet of a one-fifteenth-scale model of the 80- by 120-Foot Wind Tunnel inlet: (a) Diagram showing typical survey; (b) Velocity-vector magnitude and direction showing the slopes of the curves at selected points along the survey.

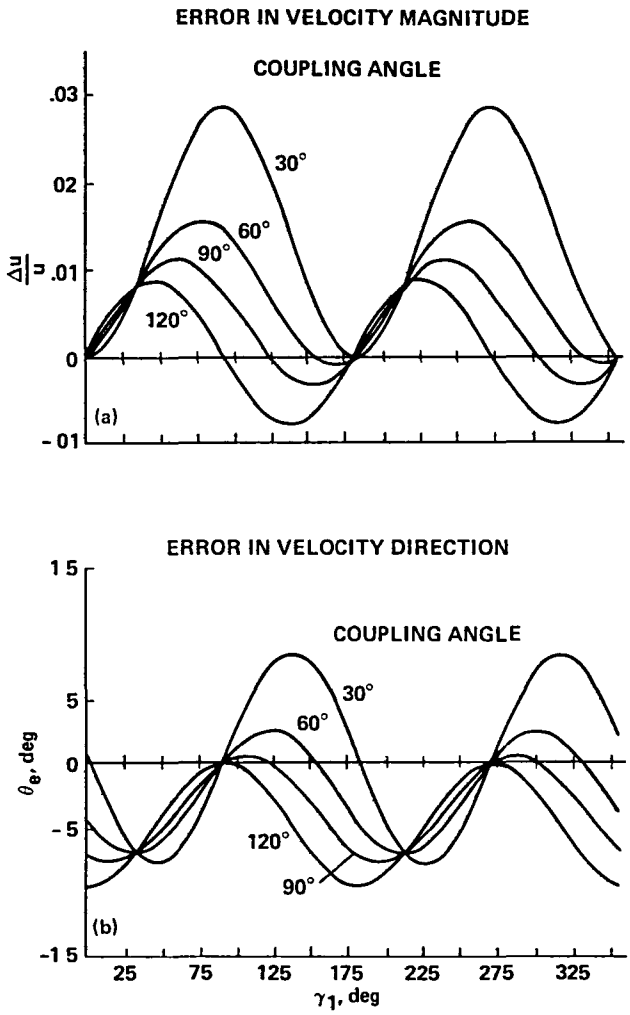

Figure 8.- Misalignment errors plotted versus γ_1 for various coupling angles using the data of Figure 7b with Δr = 1 cm: (a) Relative error in velocity magnitude; (b) Corresponding error in velocity vector direction.

1 Report No	2 Government Accession No	3 Recipient's Catalog No
NASA TM 86718		

4 Title and Subtitle	5 Report Date
NONSIMULTANEOUS COUPLED LASER VELOCIMETER MEASUREMENT TECHNIQUE: ERROR PREDICTION FOR SPATIALLY NONCOINCIDENT MEASUREMENTS	August 1985
	6 Performing Organization Code
7 Author(s)	8 Performing Organization Report No
Michael S. Reinath	85217
	10 Work Unit No
9 Performing Organization Name and Address	
Ames Research Center Moffett Field, CA 94035	11 Contract or Grant No
	13 Type of Report and Period Covered
12 Sponsoring Agency Name and Address	Technical Memorandum
National Aeronautics and Space Administration Washington, DC 20546	14 Sponsoring Agency Code
	505-31-51

15 Supplementary Notes

Point of contact: Michael S. Reinath, Ames Research Center, MS 247-1, Moffett Field, CA 94035, (415)-694-6680 or FTS 464-6680

16 Abstract

A technique for obtaining orthogonal velocity components from non-orthogonal measurements using the NASA Ames Research Center Long-Range Laser Velocimeter (LRLV) is briefly discussed. A description is then presented of the error that occurs when these nonorthogonal measurements are spatially noncoincident because of positioning inaccuracies, and equations are developed for predicting this error. Sample data are presented and a prediction of the expected error for two typical applications is made. To cover other cases in general, a parametric study is conducted and the results are presented in a tabular format.

17 Key Words (Suggested by Author(s))	18 Distribution Statement
Laser velocimetry Error prediction Noncoincident measurements	Unlimited Star catagory: 35

19 Security Classif (of this report)	20 Security Classif (of this page)	21 No of Pages	22 Price*
Unclassified	Unclassified	47	A03

*For sale by the National Technical Information Service, Springfield, Virginia 22161

End of Document