NASA-CR-176,658

JPL PUBLICATION 84-58

NASA-CR-176658
19860012553

Alternate Nozzle Ablative Materials Program

N. A. Kimmel

LIBRARY COPY
DEC 30 1991
LANGLEY RESEARCH CENTER
LIBRARY NASA
HAMPTON, VIRGINIA

September 1, 1984

Prepared for
NASA Marshall Space Flight Center
through an agreement with
National Aeronautics and Space Administration
by
Jet Propulsion Laboratory
California Institute of Technology
Pasadena, California

NF00451

JPL PUBLICATION 84-58

Alternate Nozzle Ablative Materials Program

N. A. Kimmel

September 1, 1984

Prepared for
NASA Marshall Space Flight Center
through an agreement with
National Aeronautics and Space Administration
by
Jet Propulsion Laboratory
California Institute of Technology
Pasadena, California

N85-23924 #

The research described in this publication was carried out by Morton Thiokol, Inc., Wasatch Division, and the Jet Propulsion Laboratory, California Institute of Technology, and was sponsored by the NASA George C. Marshall Space Flight Center through an agreement with the National Aeronautics and Space Administration.

FOREWORD

The work described in this document was performed by Morton Thiokol, Inc./Wasatch Division (MTI/WD) under National Aeronautics and Space Administration, George C. Marshall Space Flight Center (NASA-MSFC), Contract No. NAS8-30490, and by the Jet Propulsion Laboratory (JPL), California Institute of Technology, by agreement with the National Aeronautics and Space Administration under Contract No. NAS7-918. NASA-MSFC, JPL, and MTI/WD initiated a joint subscale nozzle test program to evaluate erosion, char, and thermal performance of polyacrylonitrile (PAN)-based and pitch-based carbon cloth-phenolic ablative materials; ceramic fiber mat-phenolic and E-glass fiber mat-phenolic insulator materials; and, a PAN-based carbon fiber-epoxy filament wound structural overwrap material.

A 9.5-inch throat diameter subscale Space Shuttle Solid Rocket Motor (SRM) nozzle assembly was designed by MTI/WD and NASA-MSFC. A 10,000-lb propellant subscale reusable test motor was designed by JPL. Four motor-nozzle tests were performed by JPL. The test nozzles were evaluated by MTI/WD. Conclusions and recommendations were made by MTI/WD and NASA-MSFC. Test reports, which include summary evaluations and analyses, and conclusions and recommendations, were provided by MTI/WD. The reports are included, without change, as Appendices A, B, C, and D of this report. Finally, JPL wrote and published this final report.

The Technical Director and Program Manager for this SRM alternate material evaluation program was Mr. James W. Thomas, Jr., of NASA-MSFC. The Task Manager of the MTI/WD effort was Mr. George E. Nichols. The Task Manager for the JPL work was Mr. Floyd A. Anderson.

This Page Intentionally Left Blank

ABSTRACT

Under a NASA-MSFC funded program, four subscale solid rocket motor tests were conducted successfully by JPL to evaluate alternate nozzle liner, insulation, and exit cone structural overwrap components for possible application to the Space Shuttle Solid Rocket Motor (SRM) nozzle assembly. The 10,000-lb propellant motor tests each simulated, as close as practical, the configuration and operational environment of the full-scale SRM, and had (1) a 9.5-inch initial nozzle throat diameter, (2) an operating time of approximately 32 s, (3) an average operating chamber pressure of approximately 650 psia, (4) a burning rate of 0.340 in./s at 650 psia and 77°F, and (5) an average thrust of approximately 75,000 lbf. Fifteen PAN-based and three pitch-based carbon-phenolic nozzle liner materials were evaluated; three PAN-based materials had no filler in the phenolic resin, four PAN-based materials had carbon microballoons in the resin, and the rest of the materials had carbon powder in the resin. Three nozzle insulation materials were evaluated; an aluminum oxide-silicon oxide ceramic fiber mat-phenolic material with no resin filler, and two E-glass fiber mat-phenolic materials with no resin filler. Also, one PAN-based carbon fiber-epoxy material was evaluated for the structural exit cone overwrap. It was concluded by MTI/WD (the fabricator and evaluator of the test nozzles) and NASA-MSFC that it was possible to design an alternate-material full-scale SRM nozzle assembly, which could provide an estimated 360-lb increased payload capability for Space Shuttle launches over that obtainable with the current qualified SRM design. It would use (1) PAN-based carbon-phenolic material in the throat region, (2) lightweight PAN-based carbon cloth-phenolic material for the aft exit cone, fixed housing, and cowl, (3) lightweight

glass-phenolic material for all insulator components, and (4) a PAN-based graphite fiber-epoxy filament wound exit cone overwrap. Due to risks associated with the introduction of new materials with relatively limited test data, and the Space Transportation System (STS)-8A nozzle erosion anomaly, NASA-MSFC decided not to incorporate the alternate materials in a full-scale SRM nozzle assembly at this time. No additional alternate materials tests are planned.

CONTENTS

I. INTRODUCTION AND SUMMARY 1

II. OBJECTIVES 5

A. PROGRAM 5

B. NOZZLE TEST NUMBER 1 5

C. NOZZLE TEST NUMBER 2 5

D. NOZZLE TEST NUMBER 3 5

E. NOZZLE TEST NUMBER 4 6

III. NOZZLE MATERIAL DESCRIPTION 7

A. BASELINE MATERIALS 8

1. Ablative Liner Materials 8

2. Insulation or Structural Materials 9

B. ALTERNATE MATERIALS 10

1. Ablative Liner Materials 10

2. Insulation Materials 16

3. Structural Material 16

IV. NOZZLE DESCRIPTION 18

A. NOZZLE TEST NUMBER 1 18

B. NOZZLE TEST NUMBER 2 19

C. NOZZLE TEST NUMBER 3 19

D. NOZZLE TEST NUMBER 4 19

V. NOZZLE INSTRUMENTATION 20

A. NOZZLE TEST NUMBER 1 20

CONTENTS (cont'd)

B. NOZZLE TEST NUMBER 2 20

C. NOZZLE TEST NUMBER 3 20

D. NOZZLE TEST NUMBER 4 21

VI. TEST CONDITIONS AND MOTOR PERFORMANCE 22

VII. NOZZLE PERFORMANCE PREDICTION 24

VIII. NOZZLE PERFORMANCE 25

A. NOZZLE TEST NUMBER 1 25

B. NOZZLE TEST NUMBER 2 26

C. NOZZLE TEST NUMBER 3 27

D. NOZZLE TEST NUMBER 4 27

E. DATA SUMMARY AND ANALYSIS 28

IX. CONCLUSIONS AND RECOMMENDATIONS 29

REFERENCES 31

APPENDICES 51

A. TEST NUMBER 1 STATIC TEST AND ANALYSIS REPORT 51

B. TEST NUMBER 2 STATIC TEST AND ANALYSIS REPORT 95

C. TEST NUMBER 3 STATIC TEST AND ANALYSIS REPORT 133

D. TEST NUMBER 4 STATIC TEST AND ANALYSIS REPORT 175

Figures

1. Subscale Space Shuttle Nozzle..... 33

2. N-1 Nozzle Materials and Thermocouple Locations..... 34

3. N-2 Nozzle Materials and Thermocouple Locations..... 35

4. N-3 Nozzle Materials..... 36

5. N-4 Nozzle Materials..... 37

6. Test N-3 Nozzle Instrumentation..... 38

7. Test N-4 Nozzle Instrumentation..... 39

8. Test Motor Assembly..... 40

9. Predicted Chamber Pressure-Time Traces..... 41

10. Test N-1 Motor Pressure-Time Curve..... 42

11. Test N-2 Motor Pressure-Time Curve..... 43

12. Test N-3 Motor Pressure-Time Curve..... 44

13. Test N-4 Motor Pressure-Time Curve..... 45

Tables

1. Instrumentation Specifications for N-1 and N-2 Motors..... 46

2. Instrumentation Specifications for N-3 Motor..... 47

3. Instrumentation Specifications for N-4 Motor..... 48

4. Propellant Characteristics..... 49

I. INTRODUCTION AND SUMMARY

The Space Shuttle SRM nozzle uses Rayon-based carbon cloth-phenolic as the qualified baseline material. Each SRM nozzle assembly uses approximately 14,000 lb of Rayon-based carbon cloth-phenolic material in its manufacture. Two newer carbon cloth-phenolic materials, using PAN-based and pitch-based fibers, offer materials that have higher thermal and higher structural properties, and improved erosion performance over that of the baseline SRM material. These materials offer the potential of (1) reducing the SRM nozzle cost, (2) increasing the SRM performance, and (3) providing an increase in the Space Shuttle payload capability. Therefore, in 1978 NASA-MSFC and JPL initiated a subscale nozzle test program to evaluate the erosion, char, and thermal performance of PAN-based and pitch-based carbon cloth-phenolic materials in simulated full-scale SRM nozzle environments. From December 1978 through October 1982, a total of 48 subscale nozzle tests were conducted by JPL at its Edwards Test Station (ETS), Edwards Air Force Base, California test site: six 4.0-inch and 42 2.2-inch throat diameter nozzle assemblies (Refs. 1, 2 and 3). Based on the results of the subscale tests, it was estimated that recession at the full-scale SRM nozzle assembly throat could be reduced by 21% and 40% with the use of PAN-based and pitch-based carbon cloth-phenolic materials, respectively. At the 40% reduction in throat erosion rate, the full-scale SRM delivered specific impulse could be increased by 0.6 s, and would provide an estimated 500-lb increase in the Space Shuttle payload capability.

Based on the successful test results from the 2.2-inch and 4.0-inch throat diameter nozzle tests, NASA-MSFC initiated, in February 1982, a final subscale nozzle test program for evaluation of the PAN-based and pitch-based

carbon cloth-phenolic materials before commitment to full-scale SRM alternate nozzle design and qualification tests. A joint nozzle design effort between NASA-MSFC and MTI/WD was initiated, and a 9.5-inch throat diameter nozzle design, which simulated (as close as feasible) the full-scale SRM nozzle configuration, was established. Also, a test motor design effort by JPL was initiated, and a new reusable subscale test motor, which simulated (as close as practical) the full-scale SRM motor, was established. The MTI/WD manufactured four subscale nozzle assemblies, using the full-scale SRM manufacturing processes and procedures. JPL fabricated the four test motors, and conducted the four motor-nozzle static tests, under ground-level conditions, at its ETS facility. It is of interest to note that the motors used for the subscale tests were the largest SRMs ever manufactured and tested at the JPL ETS. The cartridge-loaded motor was designed to (1) have a burn time of about 32 s, (2) operate at an average chamber pressure of about 650 psia, (3) have a burn rate of 0.340 in./s at 650 psia and 77°F, (4) contain about 10,200 lb of propellant, and (5) produce an average thrust of about 75,000 lbf.

The report contains (1) a description of each of the four subscale SRM nozzle assemblies (N-1 through N-4) that were tested (N-1 being the baseline assembly, which was fabricated using the same ablative, insulation and structural composite materials as the current qualified SRM nozzle, and N-2 through N-4, inclusive, having been fabricated using alternate ablative, insulation and structural composite materials), (2) a description of the SRM nozzle assembly baseline and alternate composite materials, including some pertinent thermal and mechanical properties of the materials, (3) a description of the motor that was utilized to test the four nozzles, (4) a description of how each nozzle was instrumented with thermocouples to obtain temperature data

on each firing for application to thermal performance assessment and/or analyses, (5) detailed test reports and nozzle assembly evaluations (Appendices A through D, inclusive) compiled by the MTI/WD for each of the four nozzles that were tested, and (6) a summary and comparative analysis report which is also contained in Appendix D.

All four SRM subscale nozzle assembly tests were conducted successfully; N-1 on 18 November 1982, N-2 on 2 February 1983, N-3 on 6 April 1983, and N-4 on 17 August 1983. All tests were performed in accordance with a JPL-prepared detailed test plan (Ref. 4). Eighteen alternate carbon cloth-phenolic tape-wrapped materials were tested as nozzle ablative liners, fifteen of which contained fabric made with carbon yarn that was processed using a PAN precursor, and three of which contained fabric made with carbon yarn that was processed using a pitch precursor. Three of the PAN carbon cloth-phenolic materials were made using no filler in the phenolic resin, and another four used carbon microballoons as the filler in the phenolic resin to achieve a low density (1.21 to 1.30 g/cm^3) in the as-cured state. The remainder of the PAN carbon cloth-phenolic materials used carbon powder as the filler in the phenolic resin at various percentages by weight loading (5 to 18%), and had densities, in the as-cured state, that ranged from 1.50 to 1.56 g/cm^3. The three pitch-based carbon cloth-phenolic materials all contained carbon powder as a filler in the phenolic resin (ranging from 10 to 18% by weight), and had as-cured densities ranging from 1.63 to 1.66 g/cm^3. Three alternate composite materials were tested as the backface insulator of the nozzle throat; one was a ceramic (aluminum oxide-silicon oxide) fiber mat-phenolic resin material with no filler in the resin, and with an as-cured density of 0.90-1.0 g/cm^3, and the other two were E-glass fiber mat-phenolic resin materials with no filler in the resin, and as-cured

densities ranging from 1.0 to 1.1g/cm^3. All three of the insulation materials were processed into the nozzle components by the tape-wrap technique. Only one alternate material was tested as the structural overwrap component of the exit cone liner. It was a carbon fiber-epoxy material, using PAN-based carbon fibers, that was applied to the nozzle by the filament-winding technique. It has an as-cured density of 1.55 g/cm^3.

From the results of these tests, it has been concluded that a full-scale SRM nozzle can be designed using selected materials tested in this program. The alternate full-scale SRM nozzle design, shown in Figure 33 of Appendix D, (1) would weigh less (approximately 1,430 lb per nozzle) than the currently qualified SRM nozzle assembly; (2) would include PAN-based carbon cloth-phenolic material in the throat region to provide 13 to 22% decreased erosion (approximately 0.125 s I_{sp} gain) over that experienced with the baseline Rayon-based carbon cloth-phenolic material; employ lightweight PAN-based carbon cloth-phenolic material for the aft exit cone, fixed housing, and cowl; use light-weight glass phenolic material for all insulator components; have a PAN-based graphite-epoxy filament wound exit cone structural overwrap; and (3) would provide an estimated 360-lb increased payload capability for Space Shuttle launches. Included in the total payload gain (360 lb) is 100 lb due to reduction in throat erosion and 260 lb associated with reduced nozzle weight.

Due to the risks associated with introduction and qualification of new nozzle materials, with relatively limited test data and the STS-8A nozzle erosion anomaly, MSFC has decided not to incorporate the alternate materials in a full-scale nozzle at this time. No additional alternate materials tests are planned.

II. OBJECTIVES

The program objectives and the objective(s) of each of the four nozzle assembly tests are as stated in the following text.

A. PROGRAM

The program objectives were two-fold; namely (1) to demonstrate lightweight, high-performance materials that can be applied effectively in the Space Shuttle SRM nozzles to achieve increased Space Shuttle payload capability, and (2) to provide dual material supplier capability.

B. NOZZLE TEST NUMBER 1

The objective of nozzle test number 1 (N-1) was to establish the erosion and char performance of the baseline Space Shuttle SRM nozzle ablative and insulative materials under the conditions and environment of the test motor. This would provide the necessary data to permit a direct comparison of subscale with full-scale SRM nozzle Rayon-based carbon cloth-phenolic material performance.

C. NOZZLE TEST NUMBER 2

The objective of nozzle test number 2 (N-2) was to evaluate and compare the performance characteristics of alternate ablative materials with respect to the baseline materials.

D. NOZZLE TEST NUMBER 3

The objective of nozzle test number 3 (N-3) was to evaluate and compare the performance characteristics of additional alternate ablative materials with respect to the previously tested alternate materials and the baseline materials.

E. NOZZLE TEST NUMBER 4

The objectives of nozzle test number 4 (N-4) were (1) to evaluate a lightweight, PAN-based carbon cloth-phenolic aft exit cone with a graphite-epoxy filament wound structural overwrap, and (2) to verify repeatable performance of the final selected alternate ablative materials with respect to the baseline materials and previously tested alternate materials.

III. NOZZLE MATERIAL DESCRIPTION

There are four composite materials that are baseline, qualified and currently utilized in the fabrication of Space Shuttle SRM nozzle assemblies. Two Rayon-based carbon cloth-phenolic materials, designated as MX4926 and FM5055, are used for the ablative liner portion of the nozzle assembly. Either of these two materials may be employed. Two glass cloth-phenolic materials, designated as MXB6020 and FM5755, are used for either the structural exit cone overwrap or the throat back-face thermal insulation portions of the nozzle assembly. Either of these two materials may be employed. As is described later, in Section IV, only the FM5055 and MXB6020 materials were tested in the baseline test N-1 nozzle assembly. The FM5755 material was tested as the structural exit cone overwrap component in the N-2 and N-3 nozzle assemblies. Although the MX4926 material was not tested in this test program, a description of the material, which can be used in lieu of the FM5055 material for fabrication of the current SRM nozzle assembly ablative liner components, is included in this section under the heading of BASELINE MATERIALS.

There were a total of 22 alternate composite materials tested, at least once in the N-2, N-3, and N-4 nozzle assembly tests. Eighteen of the materials were tested as ablative liner components and are designated as MX4961, MX4961A, MX4961B, MX4967, MX134LD, K411, K411A, FM5879, FM5879A, FM5879B, FM5879C, FM5908, FM5908A, FM5834, FM5834A, FM5750, K458, and FM5750A. Three of the materials were tested as a throat back-face insulation component and are designated as MXR520, FM5898, and MX4968. One alternate material was tested as a structural overwrap of the exit cone ablative liner in test N-4 and is designated as FX425B21. The alternate materials are described in this section under the heading of ALTERNATE MATERIALS.

A brief description of each of the materials that are currently employed in the fabrication of Space Shuttle SRM nozzle assemblies (BASELINE MATERIALS), and of each alternate material that was tested in this program (ALTERNATE MATERIALS), is contained in the following text.

A. BASELINE MATERIALS

The following materials are qualified and utilized for ablative liner, throat backface insulation and structural overwrap of the exit cone liner in the current Space Shuttle SRM nozzle assemblies.

1. Ablative Liner Materials

Either of two Rayon-based carbon cloth-phenolic materials are employed in the fabrication of ablative liner components of the SRM nozzle assembly. It is possible to have an SRM nozzle assembly wherein any ablative liner component is made from either one or the other of the two materials, but no one component can be constructed using both of the materials in its construction. A description of each of the materials is as follows.

a. MX4926

This Fiberite Corporation material is a phenolic resin impregnated eight-harness satin weave fabric. The phenolic resin has 10-12% by weight carbon powder filler and the fabric, designated CSA, is a product of Polycarbon Incorporated. The fabric is woven with carbon yarn made from carbonized continuous Rayon filaments. These filaments contain 95% carbon by weight, and have a 6×10^6 psi tensile modulus. There are also two other qualified carbon-cloth suppliers: HITCO and Union Carbide Corporation.

b. FM5055

This U.S. Polymeric material is a phenolic resin impregnated eight-harness satin weave fabric. The phenolic resin has 9-13% by weight carbon powder filler and the fabric, designated CCA3, is a product of HITCO. The fabric is woven with carbon yarn made from carbonized continuous Rayon filaments. The filaments contain 94% carbon by weight and have a 6×10^6 psi tensile modulus. There are two additional qualified carbon cloth suppliers for this material: Union Carbide Corporation and Polycarbon Incorporated.

2. Insulation or Structural Materials

Either of two glass cloth-phenolic materials are utilized in the fabrication of either the throat back-face insulation or the structural overwrap of the exit cone liner of the SRM nozzle assembly. A description of each material is as follows.

a. FM5755

This U.S. Polymeric material is a phenolic resin impregnated eight-harness satin weave fabric. The phenolic resin has 4% by weight silica powder filler, and the fabric is woven with Owens-Corning Fiberglas Corporation E-glass yarn. The yarn has a 10.5×10^6 psi tensile modulus.

b. MXB6020

This Fiberite Corporation material is a phenolic resin impregnated eight-harness satin weave fabric. The phenolic resin has no silica powder or any other filler, and the fabric is woven with Owens-Corning Fiberglass Corporation E-glass yarn. The yarn has a 10.5×10^6 psi tensile modulus.

B. ALTERNATE MATERIALS

As previously stated, there were a total of 22 different composite materials tested in the N-2, N-3, and N-4 nozzle assembly tests. The utilization of the materials in each test nozzle assembly is presented in Section IV. Each material is described in the ensuing text.

1. Ablative Liner Materials

Eighteen different ablative liner materials were tested in the N-2, N-3, and N-4 nozzle assembly tests; fifteen PAN-based carbon cloth-phenolic materials and three pitch-based carbon cloth-phenolic materials. A description of each material is as follows.

a. MX4961

This Fiberite Corporation material is a phenolic resin impregnated eight-harness satin weave fabric. The phenolic resin has no filler, and the fabric is woven with Union Carbide Corporation Thornel® T-300 Grade WYP 30-1/0 carbon yarn. The yarn contains 3000 filaments that are made by carbonizing PAN continuous filament. The carbon filaments contain 92% carbon by weight and have a 33 x 10^6 psi tensile modulus.

b. MX4961A

This Fiberite Corporation material is a phenolic resin impregnated five-harness satin weave fabric. The phenolic resin has no filler, and the fabric is woven with Courtaulds Limited E/XA-S carbon yarn. The yarn contains 6000 filaments that are made by carbonizing PAN continuous filament. The carbon filaments contain 99% carbon by weight and have a 34 x 10^6 psi tensile modulus.

c. MX4961B

This Fiberite Corporation material is a phenolic resin impregnated five-harness satin weave fabric. The phenolic resin has no filler, and the fabric is woven with Union Carbide Corporation Thornel® T-300 Grade WYP 15-1/0 carbon yarn. The yarn contains 6000 filaments that are made by carbonizing PAN continuous filament. The carbon filaments contain 92% carbon by weight and have a 33 x 10^6 psi tensile modulus.

d. MX4967

This Fiberite Corporation material is a phenolic resin impregnated mock Leno weave (an open weave with intersections that draw a group of warp and fill yarns together). The cured material has a low density of 1.0 to 1.3 g/cm^3. The phenolic resin contains 9-13% by weight carbon microballoon filler, and the fabric is woven with bundles of three Celanese Corporation Celion® carbon yarns. The yarn contains 6000 filaments that are made by carbonizing PAN continuous filament. The carbon filaments contain 93% by weight carbon and have a 34 x 10^6 psi tensile modulus.

e. MX134LD

This Fiberite Corporation material is a phenolic resin impregnated open plain weave fabric. The cured material has a low density of 1.0 to 1.30 g/cm^3. The 37-44% by weight butadiene-acrylonitrile modified phenolic resin contains 10-13% by weight carbon microballoon filler, and the fabric is woven with Union Carbide Corporation Thornel® T-300 grade WYP 30-1/0 carbon yarn. The yarn contains 3000 filaments that are made by carbonizing PAN continuous filament. The carbon filaments contain 92% by weight carbon and have a 33 x 10^6 psi tensile modulus.

f. K411

This Fiberite Corporation material is a phenolic resin impregnated balanced eitht-harness satin weave fabric. The phenolic resin contains 5-16% by weight carbon powder filler, and the carbon fabric is a product of Stackpole Fibers Co., known an Panex™ SWB-8. The fabric is woven from PANEX 30Y/800d carbon yarn, which is made by spinning long staple PAN filaments prior to being carbonized. The carbon filaments contain 99% by weight carbon and have a 38 x 10^6 psi tensile modulus.

g. K411A

This Fiberite Corporation material is a phenolic resin impregnated balanced eight-harness satin weave fabric. The phenolic resin contains 10-18% by weight carbon powder filler, and the carbon fabric is a product of Polycarbon Incorporated, designated as PCSA. The fabric is woven from carbon yarn, which is made by spinning long staple PAN filaments prior to being carbonized. The carbon filaments contain 99% carbon by weight and have a 38 x 10^6 psi tensile modulus.

h. FM5879

This U.S. Polymeric material is a phenolic resin impregnated eight-harness satin weave fabric. The phenolic resin contains 10-18% by weight carbon powder filler, and the fabric is woven with HITCO Hi-Tex carbon yarn. The yarn contains 3000 filaments that are made by carbonizing PAN continuous filament. The carbon filaments contain 94% carbon by weight and have a 33 x 10^6 psi tensile modulus.

i. FM5879A

This U.S. Polymeric material is a phenolic resin impregnated

eight-harness satin weave fabric. The phenolic resin contains 10-18% by weight carbon powder filler, and the fabric is woven with Hercules Incorporated AS4 carbon yarn. The yarn contains 3000 filaments that are made by carbonizing PAN continuous filament. The carbon filaments contain 94% carbon by weight and have a 34 x 10^6 psi tensile modulus.

j. FM5879B

This U.S. Polymeric material is a phenolic resin impregnated eight-harness satin weave fabric. The phenolic resin contains 10-18% by weight carbon powder filler, and the fabric is woven with Celanese Corporation Celion® carbon yarn. The yarn contains 3000 filaments that are made by carbonizing PAN continuous filament. The carbon filaments contain 93% carbon by weight and have a 34 x 10^6 psi tensile modulus.

k. FM5879C

This U.S. Polymeric material is a phenolic resin impregnated five-harness satin weave fabric. The phenolic resin contains 10-18% by weight carbon powder filler, and the fabric is woven with HITCO Hi-Tex carbon yarn. The yarn contains 6000 filaments that are made by carbonizing PAN continuous filament. The carbon filaments contain 94% carbon by weight and have a 33 x 10^6 psi tensile modulus.

l. FM5908

This U.S. Polymeric material is a phenolic resin impregnated mock Leno weave (an open weave with intersections that draw a group of warp and fill yarns together). The cured material has a low density of 1.0 to 1.3 g/cm^3. The phenolic resin contains 10% by weight carbon microballoon filler, and the fabric is woven with three bundles of HITCO Hi-Tex carbon yarn. The

yarn contains 6000 filaments that are made by carbonizing PAN continuous filaments. The carbon filaments contain 94% carbon by weight and have a 33 x 10^6 psi tensile modulus.

m. FM5908A

This U.S. Polymeric material is a phenolic resin impregnated open plain weave fabric. The cured material has a low density of 1.0 to 1.3 g/cm^3. The 38-44% by weight butadiene-acrylonitrile modified phenolic resin contains 8-12% by weight carbon microballoon filler, and the fabric is woven with HITCO Hi-Tex carbon yarn. The yarn contains 3000 filaments that are made by carbonizing PAN continuous filament. The carbon filaments contain 94% carbon by weight and have a 33 x 10^6 psi tensile modulus.

n. FM5834

This U.S. Polymeric material is a phenolic resin impregnated balanced eight-harness satin weave fabric. The phenolic resin contains 13-18% by weight carbon powder filler, and the carbon fabric is a product of Stackpole Fibers Co., known as Panex™ SWB-8. The fabric is woven from PANEX 30Y/800d carbon yarn, which is made by spinning long staple PAN filaments prior to being carbonized. The carbon filaments contain 99% carbon by weight and have a 38 x 10^6 tensile modulus.

o. FM5834A

This U.S. Polymeric material is a phenolic resin impregnated balanced eight-harness satin weave fabric. The phenolic resin contains 13-18% by weight carbon powder filler, and the carbon fabric is a product of Polycarbon Incorporated, designated as PCSA. The fabric is woven from carbon yarn, which is made by spinning long staple PAN filaments prior to carbonizing.

The carbon filaments contain 99% carbon by weight and have a 38 x 10^6 psi tensile modulus.

p. FM5750

This U.S. Polymeric material is a phenolic resin impregnated eight-harness satin weave fabric. The phenolic resin has 10-18% by weight carbon powder filler. The VCB-45 fabric is woven with Union Carbide Corporation carbonized pitch precursor continuous-filament yarn (2000 filament), and is then graphitized. The graphitized filaments contain 99% carbon by weight and have a 45 x 10^6 psi tensile modulus.

q. K458

This Fiberite Corporation material is a phenolic resin impregnated five-harness satin weave fabric. The phenolic resin has 15-16% by weight carbon powder filler, and the fabric is woven with Union Carbide Corporation P55 pitch fiber Grade VSB-16. The yarn contains 4000 filaments that are made by graphitizing carbonized pitch precursor continuous filament. The fiber is fully processed prior to weaving, contains 99% carbon by weight, and has a 55 x 10^6 psi tensile modulus.

r. FM5750A

This U.S. Polymeric material is a phenolic resin impregnated eight-harness satin weave fabric. The phenolic resin has 10-18% by weight carbon powder filler. The VC0162 fabric is woven with Union Carbide Corporattion 4000 filament carbonized pitch precursor continuous filament yarn, and then is graphitized. The graphitized filaments contain 99% carbon by weight and have a 45 x 10^6 psi tensile modulus.

2. Insulation Materials

Three different composite materials (one ceramic fiber mat-phenolic material, and two E-glass fiber mat-phenolic materials) were tested as a nozzle throat back-face insulator; one in the N-2 test, one in the N-3 test, and one in the N-4 test. A description of each material is as follows.

a. MXR520

This Fiberite Corporation material is a phenolic resin impregnated ceramic fiber (aluminum oxide-silicon oxide) mat with a cured density of 0.90 to 1.0 g/cm^3. The phenolic resin has no fillers.

b. FM5898

This U.S. Polymeric material is a phenolic resin impregnated E-glass fiber mat with a cured density of 1.0 to 1.1 g/cm^3. The phenolic resin has no fillers.

c. MX4968

This Fiberite Corporation material is a phenolic resin impregnated E-Glass fiber mat with a cured density of 1.0 to 1.1 g/cm^3. The phenolic resin contains no fillers.

3. Structural Material

Only one alternate structural material was tested as the structural overwrap of the exit cone liner. It was utilized in the N-4 nozzle assembly test. A description of the material is as follows.

a. FX425B21

This Fiberite Corporation material is an epoxy impregnated high-modulus graphite Hercules Incorporated AS4-12,000 filament yarn that is made

using a PAN continuous fiber precursor. The resin is a Fiberite Corporation 982 epoxy resin. The cured density is 1.55 g/cm^3. The graphitized filaments contain 94% carbon by weight and have a 34 x 10^6 psi tensile modulus.

IV. NOZZLE DESCRIPTION

The SRM subscale nozzle assembly (Fig. 1) is a fixed, partially submerged configuration that contains a steel shell, shell insulator, nose ring, throat ring, and exit cone section. Overall geometry and contours of the assembly simulate, as nearly as possible, those of the full-scale SRM nozzle assembly. The ply orientation of the various components is clearly shown in Fig. 1, but are not indicated for the throat back-face insulator or the exit cone overwrap. The ply orientation of these two components are parallel to the outer diametral surface of each component. The nominal throat diameter is 9.500 inches and the nominal exit diameter is 25.420 inches. The steel shell contains eighteen holes in the flange for the purpose of fastening the nozzle to the test motor aft closure by high-strength steel bolts and nuts, and four holes for thermocouples as shown in Fig. 2. The steel shell also has an o-ring groove, forward of the forward face of the flange, for the purpose of an o-ring seal with the motor aft closure. All four nozzle assemblies that were tested in the program were of this basic configuration, with the primary difference being the materials that were employed in the construction of the composite components. Each of the four nozzles (N-1, N-2, N-3, and N-4) are described in the following text.

A. NOZZLE TEST NUMBER 1

The nozzle assembly that was used for test number 1 (N-1) is depicted in Fig. 2. As previously stated in Section III-A, the composite materials, used in the manufacture of the seven components (parts), were FM5055 and MXB6020 baseline Rayon-based materials, as shown in Fig. 2 and described in Section III-A. The materials and method of manufacture used to fabricate the

N-1 nozzle components (parts) reflect those utilized in the fabrication of the full-scale SRM nozzle parts.

B. NOZZLE TEST NUMBER 2

The nozzle assembly that was employed for test number 2 (N-2) is shown in Fig. 3. The composite materials used in the manufacture of the seven components (parts) are as depicted in Fig. 3 and are described in Section III-B.

C. NOZZLE TEST NUMBER 3

The nozzle assembly that was utilized for test number 3 (N-3) is depicted in Fig. 4. The composite materials used in the manufacture of the eight components (parts) are as shown in Fig. 4 and described in Section III-B. Note that the aft exit cone liner has been constructed with two parts (materials) rather than one part (material), as was the case for the N-1 and N-2 nozzle assemblies, as shown in Figs. 2 and 3.

D. NOZZLE TEST NUMBER 4

The nozzle assembly that was used for test number 4 (N-4) is shown in Fig. 5. The composite materials used in the manufacture of the twelve components (parts) are as depicted in Fig. 5, and described in Section III-B. Note that the throat has been constructed as two separate parts (materials) instead of one part (material) as depicted in Figs. 2, 3, and 4 for the N-1, N-2, and N-3 nozzle assemblies. Also note that the forward exit cone liner has been made as two separate parts (materials) instead of one part (material) as was the situation for the N-1, N-2, and N-3 nozzle assemblies. In addition, the aft exit cone liner has been constructed of four separate parts (materials) instead of one part (material), as was employed in the N-1 and N-2 nozzle assemblies as shown in Figs. 2 and 3, and two separate parts (materials), as depicted in Fig. 4, for the N-3 nozzle assembly.

V. NOZZLE INSTRUMENTATION

Thermocouples were installed on each nozzle assembly to record temperatures within the composite liner components at locations to obtain data for thermal performance analyses and/or assessment. The N-1 and N-2 test nozzle assemblies were instrumented in an identical manner with four thermocouples; however, the N-3 and N-4 test nozzle assemblies were each instrumented with an additional twelve thermocouples to those employed in the N-1 and N-2 tests. A description of the thermocouple installation employed on each of the four nozzle assemblies is presented in the following text.

A. NOZZLE TEST NUMBER 1

Four probe-type thermocouples (shielded and grounded construction), to the specifications shown in Table 1, were installed on the test N-1 nozzle assembly at the locations depicted in Fig. 2: two at Section B-B and two at Section C-C.

B. NOZZLE TEST NUMBER 2

Four probe-type thermocouples (shielded and grounded construction), to the specifications shown in Table 1, were installed on the test N-2 nozzle assembly at the locations depicted in Fig. 3: two at Section B-B and two at Section C-C.

C. NOZZLE TEST NUMBER 3

Sixteen thermocouples were installed on the test N-3 nozzle assembly: four probe-type shielded and grounded ones of the construction employed for tests N-1 and N-2, and twelve plain construction ones (twisted wire junction) that were held in place by a composite plug, which was cemented

into a flat-bottom hole in the exit cone with an epoxy cement. These thermocouples, to the specifications shown in Table 2, were installed on the nozzle assembly at the locations depicted in Fig. 6.

D. NOZZLE TEST NUMBER 4

Sixteen probe-type shielded and grounded thermocouples, as specified in Table 3, were installed on the test N-4 nozzle assembly: four of the construction employed for tests N-1 and N-2, and twelve welded wire junction ones that were installed into aluminum blocks that were cemented, with epoxy adhesive, onto the exterior of the exit cone in positions as shown at stations 2, 3, and 4 of Fig. 7.

VI. TEST CONDITIONS AND MOTOR PERFORMANCE

Each of the four nozzle assemblies was tested in the JPL 48-Inch Char Motor at conditions closely simulating (on a subscale basis) those encountered in the full-scale Space Shuttle SRM.

A schematic representation of the 4-ft.-diameter by 13-ft.-long test vehicle, which was fired in a vertical attitude with the nozzle pointed skyward, is provided in Fig. 8. The cartridge-loaded motor is designed to have a burn time of around 32 s, operate at an average chamber pressure of 650 psia, have a burn rate of 0.340 in./s at 650 psia and 77°F, contain about 10,200 lb of propellant, and produce an average thrust of about 75,000 lbf. The basic hardware components of the motor are reusable. Characteristics of the propellant that was employed for each of the two loaded cartridges, which were utilized as the grain of each motor, is provided in Table 4. This propellant is almost identical to the formulation used in the full-scale SRM.

The N-1, N-2, N-3, and N-4 test motors contained 10,133, 10,066, 9,987, and 10,276 pounds of propellant, respectively. The total propellant weight variation of the N-1, N-2, and N-3 motors was a function primarily of the allowable tolerance of the inside diameter and length of the cartridges. The N-4 motor contained more weight of propellant because both cartridges were reused, and therefore machined to a larger inside diameter before each cartridge was loaded with propellant.

Each motor was ignited with a bag-type igniter that contained slivers of the same propellant that was used for the grains of the subscale motors. The slivers of propellant were ignited by a hot wire. This type of igniter pro-

vides a slow rate of ignition of the motor grain, and therefore about a two-second ignition delay time from the instant that current is supplied to the hot wire until the start of pressure rise in the motor.

Each motor contained a carbon dioxide quench system that was mounted in the bottom of the motor, as indicated in Fig. 8. This system was activated about 5 s after motor burnout, and flowed carbon dioxide gas into the motor at an average flowrate of about 2.5 lb/s for a duration of about 500 s. The quench system successfully extinguished burning on the inside of the motor on each firing test.

The motor pressure of each firing was taken and recorded with instrumentation as specified in Table 1 for tests N-1 and N-2, Table 2 for test N-3, and Table 3 for test N-4.

The pressure-time curves for each motor firing were not predicted before each firing; however, the pressure-time traces for a nominal motor with a nozzle throat that erodes at constant radial erosion rates of 0.000, 0.006, 0.012, and 0.018 in./s, throughout the motor burn time, were calculated. The results of these calculations are plotted in the pressure-time traces as depicted in Fig. 9. It was expected that the actual traces would lie somewhere between the pressure-time traces shown for the 0.006 and 0.012 in./s cases of Fig. 9. The actual pressure-time histories for the N-1, N-2, N-3, and N-4 motor firings are shown in Figs. 10, 11, 12, and 13, respectively.

VII. NOZZLE PERFORMANCE PREDICTION

Prior to each test a prediction was made for the expected erosion, char thickness, and backside temperatures of the composites in the nozzle assemblies. The predictions for the N-1, N-2, N-3, and N-4 nozzle tests are shown in Fig. 4 of Appendix A (page 66), Fig. 4 of Appendix B (page 111), Fig. 6 of Appendix C (page 151), and Fig. 6 of Appendix D (page 197), respectively.

VIII. NOZZLE PERFORMANCE

Subsequent to each test, each of the four nozzle assemblies were analyzed to determine how well each performed. Details of the analyses are presented in Appendix A for the N-1 nozzle, Appendix B for the N-2 nozzle, Appendix C for the N-3 nozzle, and Appendix D for the N-4 nozzle. In addition, Appendix D includes a summary analysis of the tests and a comparison of the alternate material nozzles with the baseline SRM subscale nozzle. The following text provides excerpts from Appendices A through D.

A. NOZZLE TEST NUMBER 1

Overall performance of the N-1 nozzle was good. Erosion was generally smooth and uniform, with no gouging, pocketing, or washing being experienced.

Erosion rates measured in the N-1 nozzle were generally less than those experienced in the SRM nozzle. Inlet and throat erosion rates were within the range measured on the SRM nozzle while nose erosion was significantly less. Forward exit cone erosion rates were somewhat greater than measured on the SRM nozzle while the aft exit cone erosion was much less.

Post-test analysis of the data shows the nozzle to be an adequate test vehicle to obtain data to evaluate the relative merits of various ablative and insulative materials for use in the SRM nozzle.

The baseline nozzle was in good condition and performed well throughout static firing. Although data measured in subscale tests cannot be used directly to design the full-scale SRM nozzle, it does provide a means of selecting the best candidate materials and provides data which can be used in analytical models to design the full-scale SRM nozzle.

The preferred method for evaluating which candidate materials will perform best in the SRM nozzle is to use the subscale erosion and char data along with SRM design safety factors to calculate insulation thicknesses required for the full-scale design. This thickness multiplied by density will provide a relative weight factor. Cost can then be evaluated on the basis of the raw material cost per pound. Materials which have potential for use in the SRM nozzle should have a thickness and/or density-thickness product which is equal to or less than those determined for the baseline material.

B. NOZZLE TEST NUMBER 2

Overall performance of the N-2 nozzle was good. Erosion was generally smooth and uniform except for the nose ring, which experienced some uneven erosion and a large eroded pocket at the 270-deg location. Erosion was generally less than the baseline (Rayon) nozzle, and char depths were greater except for the aft exit cone, which charred about the same as the baseline. The K411 staple PAN performed very well and exhibited excellent structural integrity.

The PAN materials presented no major fabrication problems, and all components were considered of high quality. In general, they exhibited lower erosion and greater char. The parallel wrapped materials exhibited considerable interply swelling.

The unfilled PAN exhibited considerably greater in-depth heating as compared to the baseline; fillers may reduce this effect.

The K411 staple PAN material exhibited 13% less throat erosion than the baseline FM5055 material in the N-1 nozzle test, and had a fairly low char depth. This material also exhibited superior char structural integrity and no delaminations.

C. NOZZLE TEST NUMBER 3

Overall performance of the N-3 nozzle was good. Erosion was generally smooth and uniform. The pitch-based throat eroded less than the baseline Rayon and PAN-based materials; however, the char depth was considerably greater. The shell insulator and forward exit cone erosion was about the same as the previous PAN test and less than the baseline material. The aft exit cone low-density material performance was about the same as the previous PAN and baseline Rayon tests.

The PAN and pitch materials presented no fabrication problems and all components were considered of high quality. The pitch materials charred too deeply and are not suitable for use in the SRM nozzle. The filled PAN exhibited lower thermal conductivity than the unfilled PAN material. The low-density PAN material performed very well.

D. NOZZLE TEST NUMBER 4

The overall performance of the N-4 nozzle was good. Erosion was smooth and uniform. No major anomalies were observed. The nose, throat, and forward exit cone showed excellent integrity with very even erosion and char profiles.

The shell insulator had one delamination at the forward tip and several areas of swelling of charred plies around the outside diameter.

The nose and throat sections showed no signs of anomalies. Overall erosion was less than, and overall char was slightly higher than, the N-1 nozzle.

The glass mat throat insulator was completely intact and unaffected.

The forward exit cone sections showed lower overall erosion and higher overall char than the N-1 nozzle.

Aft exit cone sections performed similarly to past tests. Erosion was very smooth and uniform. The last aft section of test material showed some lifting of plies.

The graphite yarn-epoxy filament wound overwrap on the exit cone liner was totally intact and unaffected by the internal or external environments.

E. DATA SUMMARY AND ANALYSIS

A comparison of the N-1, N-2, N-3, and N-4 nozzle erosion is presented in Fig. 30 of Appendix D. The continuous fiber PAN-based carbon cloth-phenolic materials exhibited the best erosion resistance in the nose, inlet, and forward exit cone. Spun yarn PAN-based carbon cloth-phenolic, pitch-based carbon cloth-phenolic, and the Rayon-based carbon cloth-phenolic baseline material (FM5055) were all tested in the throat. The pitch-based material, in test N-3, eroded 15% less than the baseline material. The spun yarn PAN-based material eroded 13% and 22% less than the baseline material, in tests N-2 and N-4, respectively. Erosion in the exit cones varied from no erosion up to 4.5 mil/s, and was variable down the cone. It appears that the continuous fiber PAN-based carbon cloth-phenolic and the low-density PAN-based carbon cloth-phenolic materials eroded approximately the same in the exit cone region.

The material affected depths for the N-1, N-2, N-3, and N-4 nozzles are shown in Fig. 32 of Appendix D. The baseline material was the best performer in the nose, inlet, throat, and forward exit cone regions. All materials were equivalent in the aft cone. The pitch-based carbon cloth-phenolic material, which was used in the inlet and throat regions of the N-3 nozzle, had much greater char depths than the other materials.

IX. CONCLUSIONS AND RECOMMENDATIONS

The conclusions and recommendations that were made by MTI/WD, as a result of conducting the alternate nozzle materials program, are included in Appendix D, on page 227. These conclusions and recommendations are provided in the following text.

The PAN-based and pitch-based carbon cloth-phenolic materials presented no manufacturing difficulties. The pitch-based materials charred much too deeply and would not be considered suitable for use in full-scale SRM nozzles. The PAN-based materials, which incorporated a filler in the phenolic resin, demonstrated lower thermal conductivity than those with no filler in the phenolic resin. The low-density PAN-based carbon cloth-phenolic materials demonstrated good performance in the exit cone region. These materials appear to be well suited for use in the full-scale SRM nozzles. The mock Leno and plain weave low-density PAN-based carbon cloth-phenolic materials performed equally in the tests.

The spun PAN-based carbon cloth-phenolic materials exhibited superior char integrity. The materials, using either Stackpole Fibers Co. or Polycarbon Incorporated carbon fibers in the carbon cloth, performed equally in the tests.

The use of PAN-based carbon cloth-phenolic materials in the throat decreased erosion 13 to 22% with respect to the Rayon-based carbon cloth-phenolic baseline material in tests N-2 and N-4, respectively. It is recommended that a high-fired continuous PAN-based carbon cloth-phenolic material be tested in future nozzles. The graphite yarn-epoxy filament wound exit cone overwrap performed well.

From the results of the subscale tests, it is concluded that a full-scale SRM nozzle can be designed using materials tested in this program. The design would weigh less than the present SRM nozzle assembly. Figure 33 of Appendix D shows the proposed full-scale design and estimated payload gains. The design would include PAN-based carbon cloth-phenolic material in the throat region to provide better erosion resistance. Also, the assembly would employ lightweight PAN-based carbon cloth-phenolic material for the aft exit cone, fixed housing, and cowl. In addition, lightweight glass-phenolic material would be used for all insulator components, and graphite yarn-epoxy would be employed as a filament wound exit cone overwrap. Taking all factors into consideration, the utilization of the design for full-scale SRM nozzle assemblies, in lieu of the current qualified SRM nozzle assemblies, would provide an estimated 360-lb increased payload capability for Space Shuttle launches.

Due to the risks associated with the introduction and qualification of new nozzle materials with relatively limited test data, and the STS-8A nozzle erosion anomaly, NASA-MSFC has decided not to incorporate the alternate materials in a full-scale nozzle at this time. No additional alternate materials tests are planned.

REFERENCES

1. Powers, L.B. and Bailey, R.L., "Shuttle Subscale Ablative Nozzle Tests", in AIAA/SAE/ASME 16th Joint Propulsion Conference, June 30 - July 2, 1980/ Hartford, Connecticut, AIAA Paper No. AIAA-80-1102.

2. Powers, L.B., Bailey, R.L., and Morrison, B.H., "Shuttle Solid Rocket Motor Nozzle Alternate Ablative Evaluation", in AIAA/SAE/ASME 17th Joint Propulsion Conference, July 27-29, 1981/Colorado Springs, Colorado, AIAA Paper No. AIAA 81-1461.

3. Powers, L.B. and Bailey, R.L., "Shuttle Subscale Ablative Nozzle Tests", Journal of Spacecraft and Rockets, Vol. 19, Number 2, March - April 1982, p. 104, AIAA Paper No. AIAA 80-1102R.

4. Kimmel, N.A., "Shuttle SRM 9.5-Inch Subscale Nozzle Test Plan", Revision D, 3 October 1983, unpublished California Institute of Technology/Jet Propulsion Laboratory internal document.

This Page Intentionally Left Blank

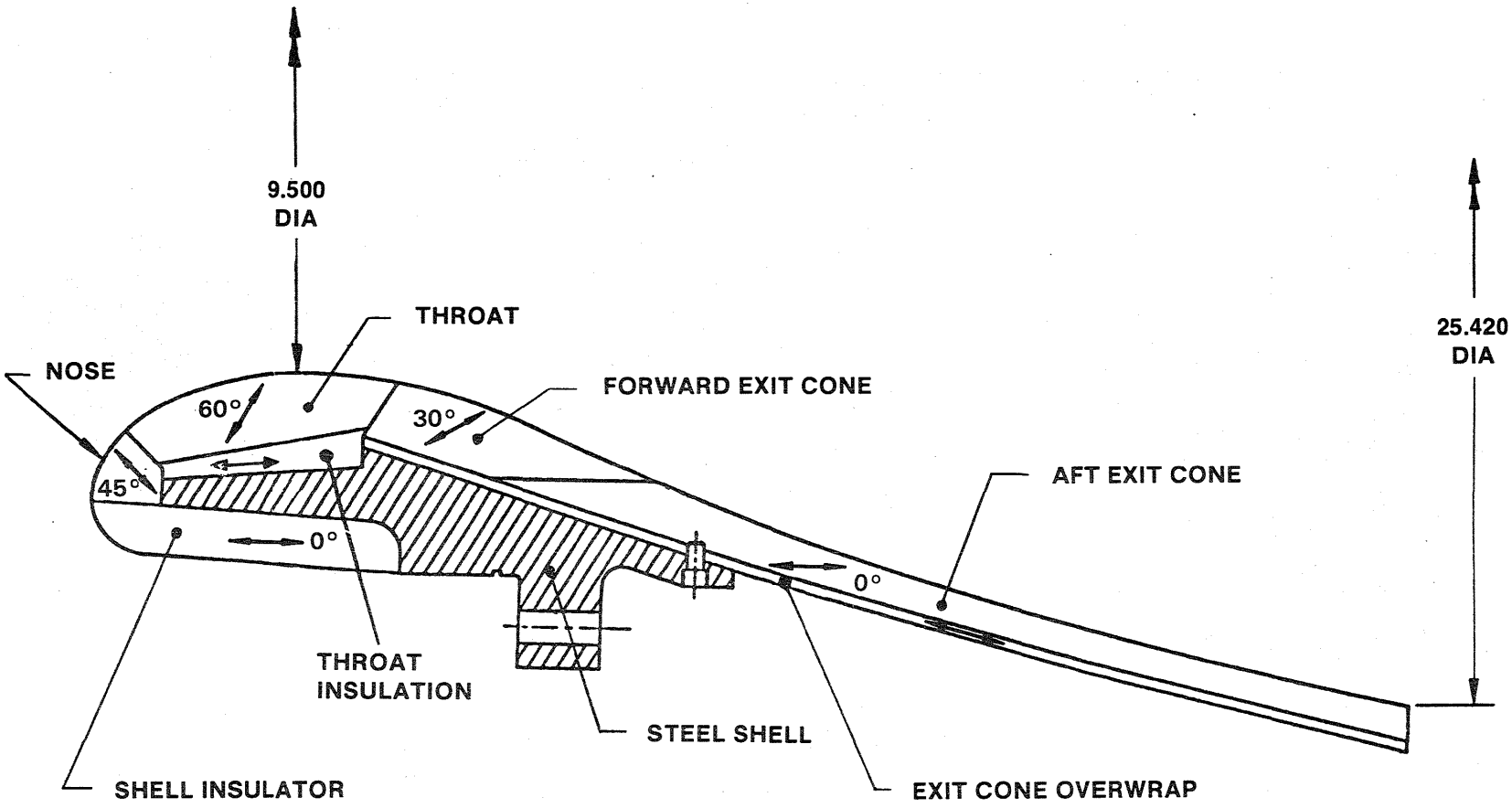

Figure 1. Subscale Space Shuttle Nozzle

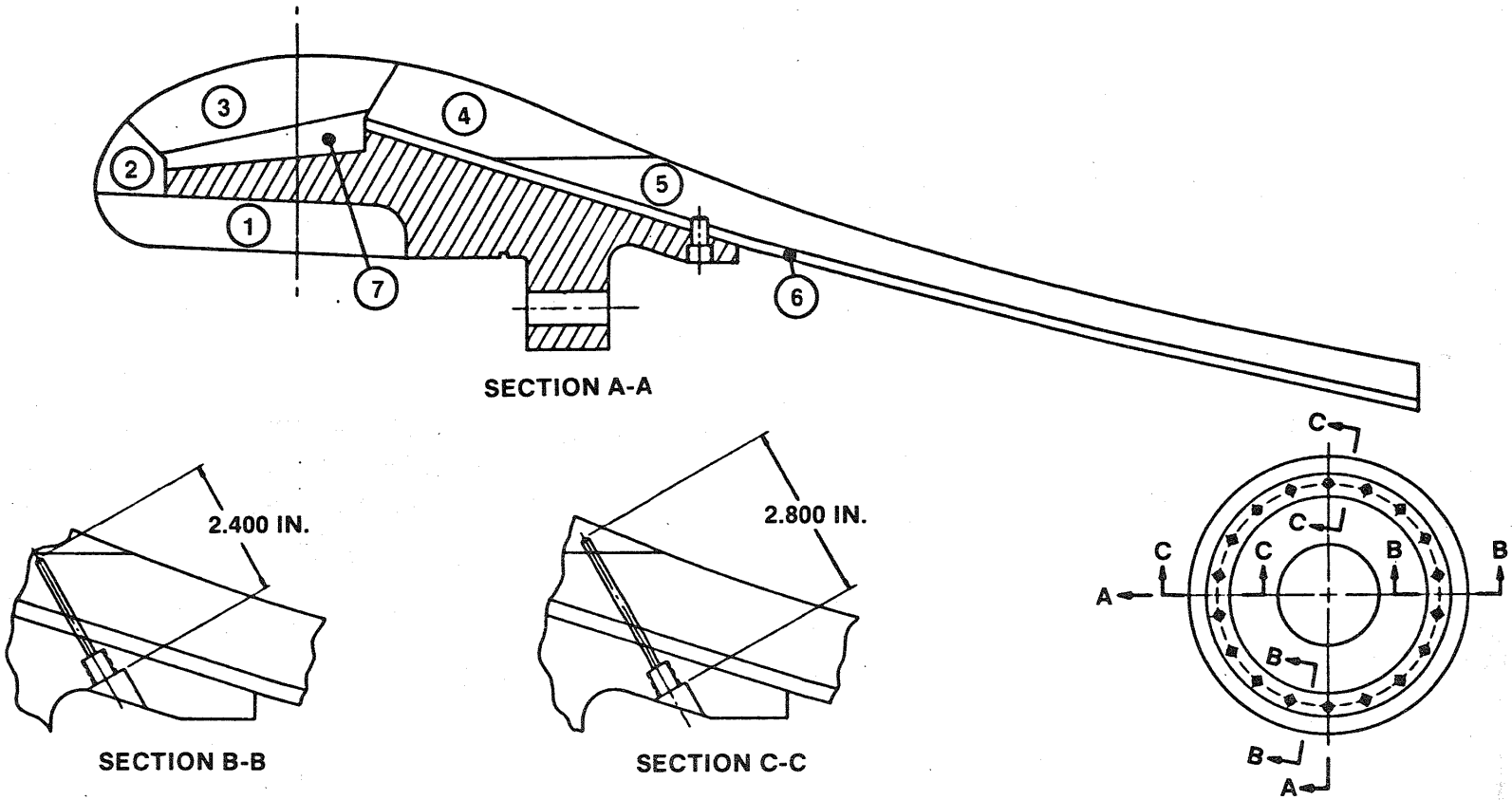

PART	1	2	3	4	5	6	7
MATERIAL	FM5055	FM5055	FM5055	FM5055	FM5055	MXB6020	MXB6020

Figure 2. N-1 Nozzle Materials and Thermocouple Locations

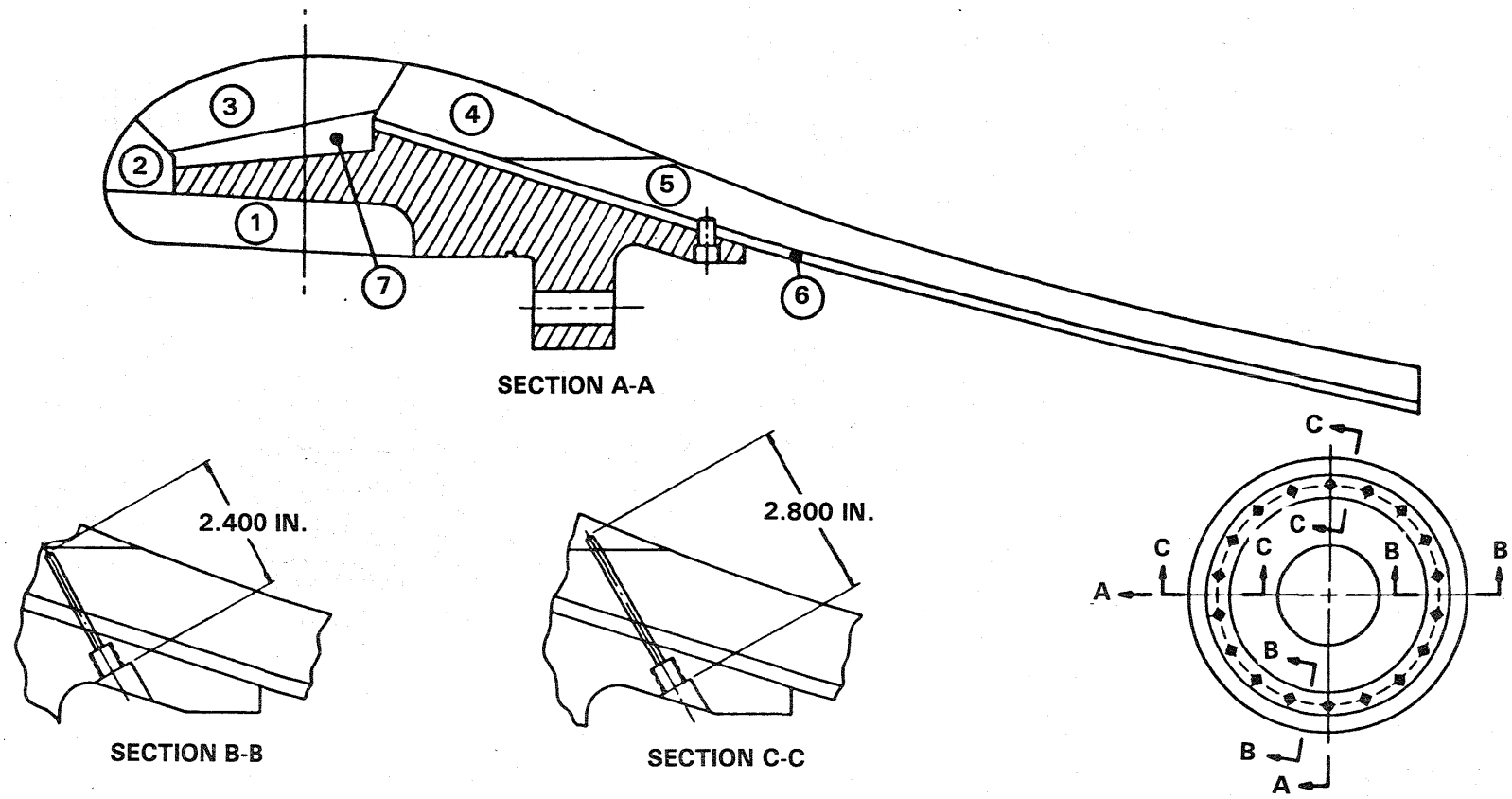

PART	1	2	3	4	5	6	7
MATERIAL	MX4961A	FM5879	K411	MX4961	MX4961B	FM5755	MXR520

Figure 3. N-2 Nozzle Materials and Thermocouple Locations

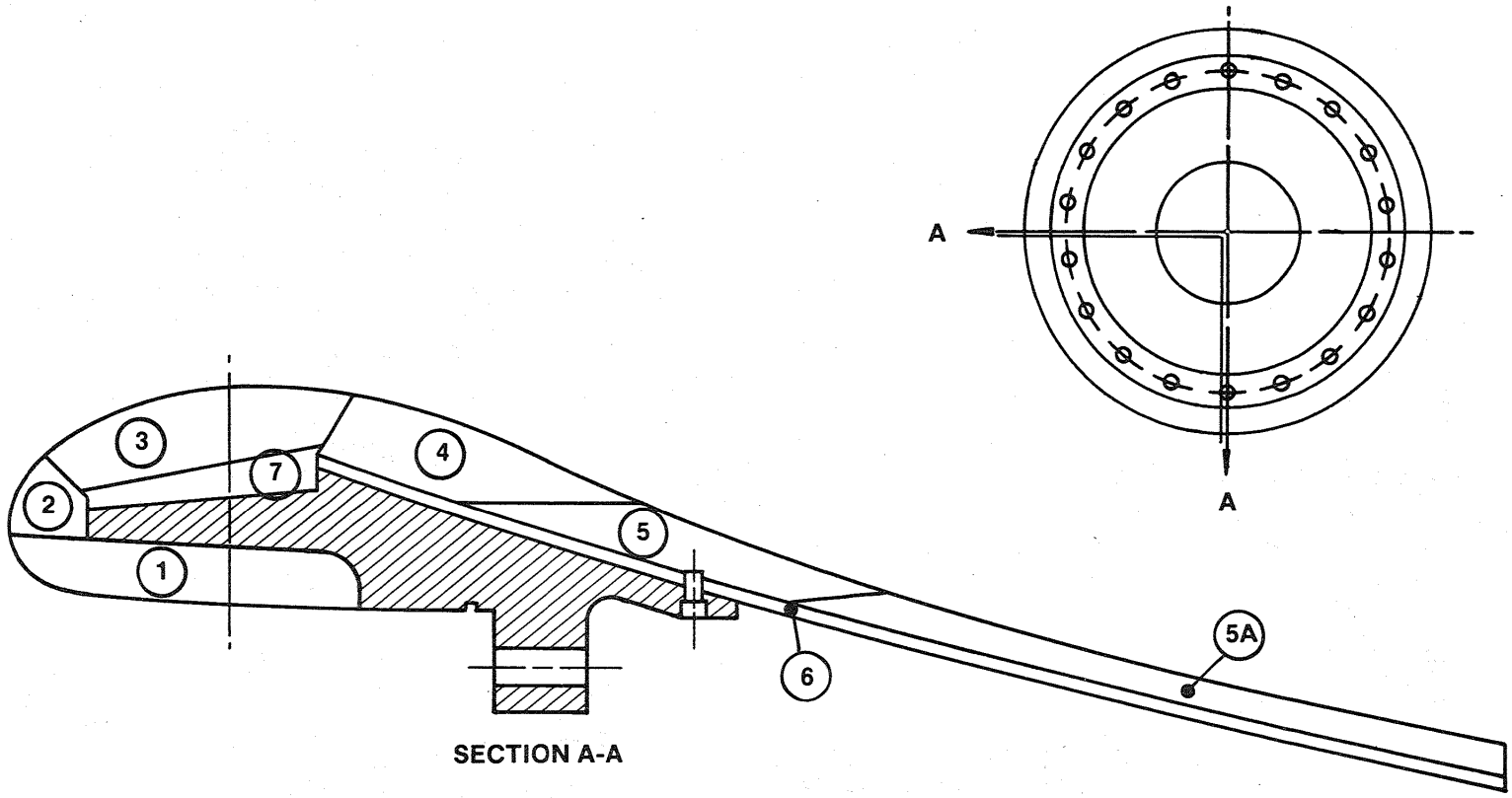

PART	1	2	3	4	5	5A	6	7
MATERIAL	FM5879A	FM5750A	K458	FM5879B	FM5879C	MX134LD	FM5755	FM5898

Figure 4. N-3 Nozzle Materials

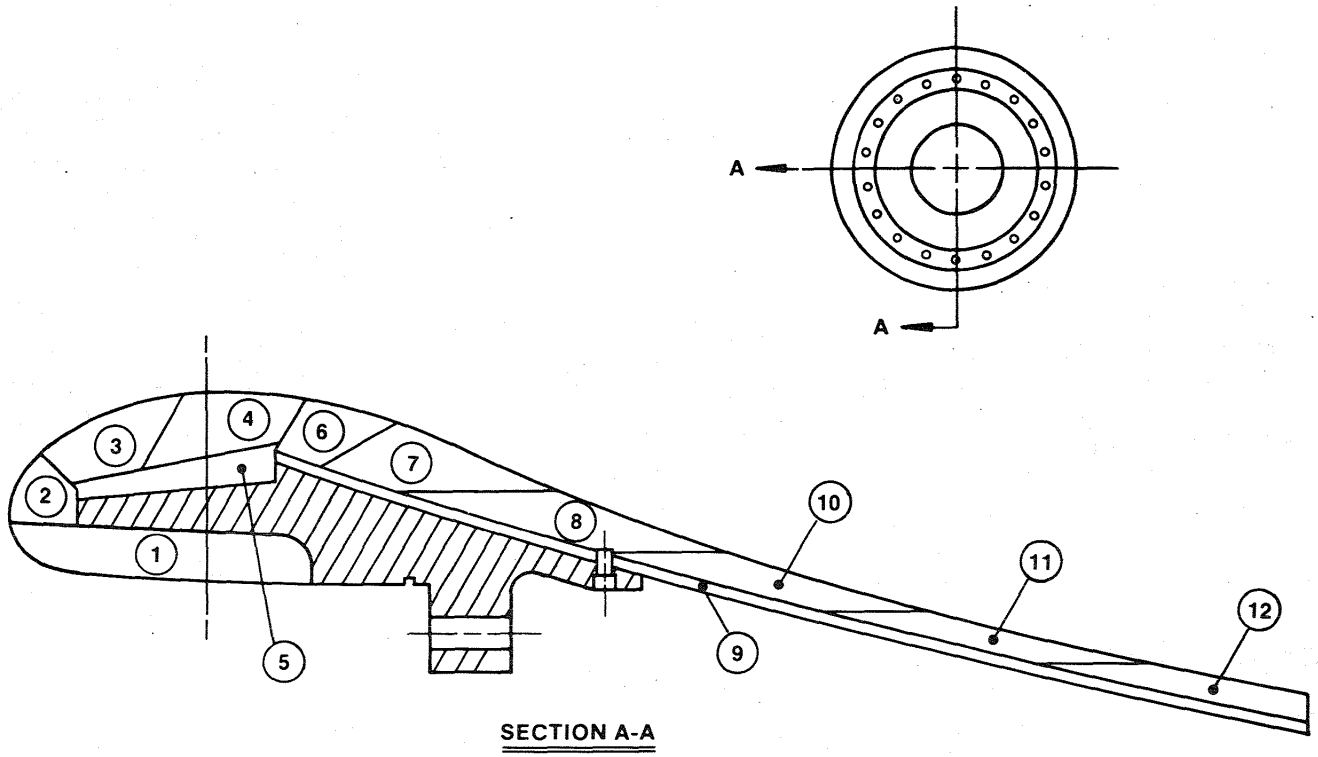

PART	1	2	3	4	5	6	7	8	9	10	11	12
MATERIAL	K411	K411	K411A	FM5834	MX4968	FM5834A	K411	MX134LD	FX425B21	FM5908	MX4967	FM5908A

Figure 5. N-4 Nozzle Materials

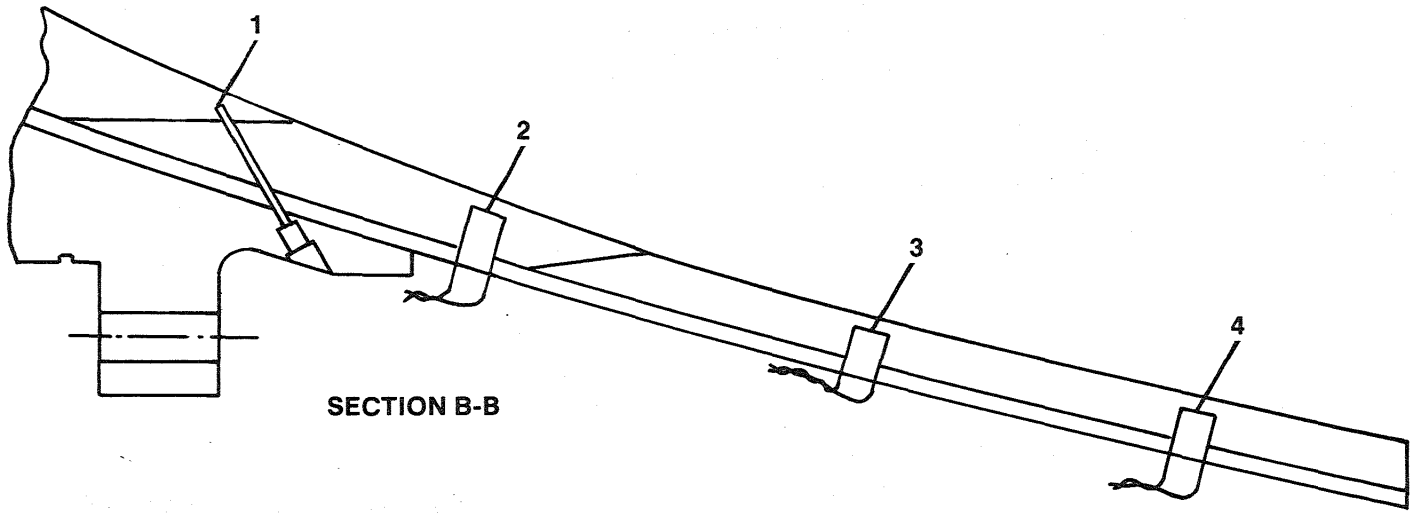

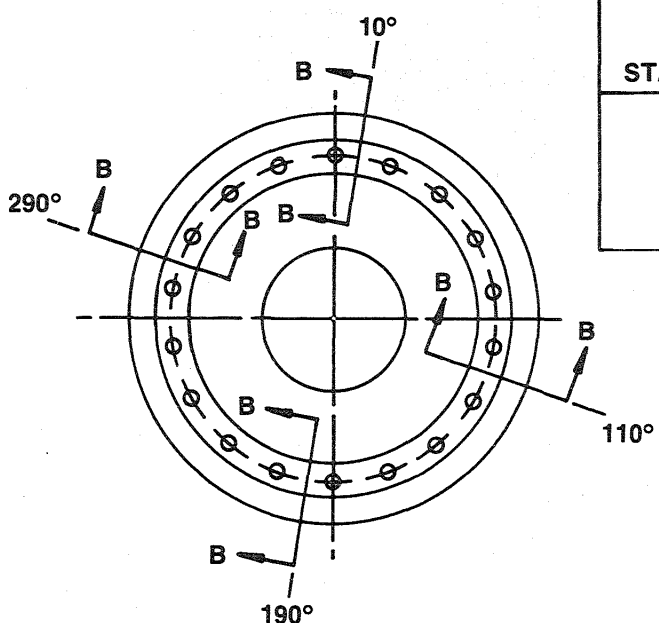

STATION	PLANE (DEG)	DEPTH BELOW FLOW CONTOUR (IN.)	THERMOCOUPLE TYPE
1-4	10	0.2	W 5% RE/W 26% RE
1-4	110	0.3	CHROMEL/ALUMEL
1-4	190	0.4	CHROMEL/ALUMEL
1-4	290	0.5	CHROMEL/ALUMEL

Figure 6. Test N-3 Nozzle Instrumentation

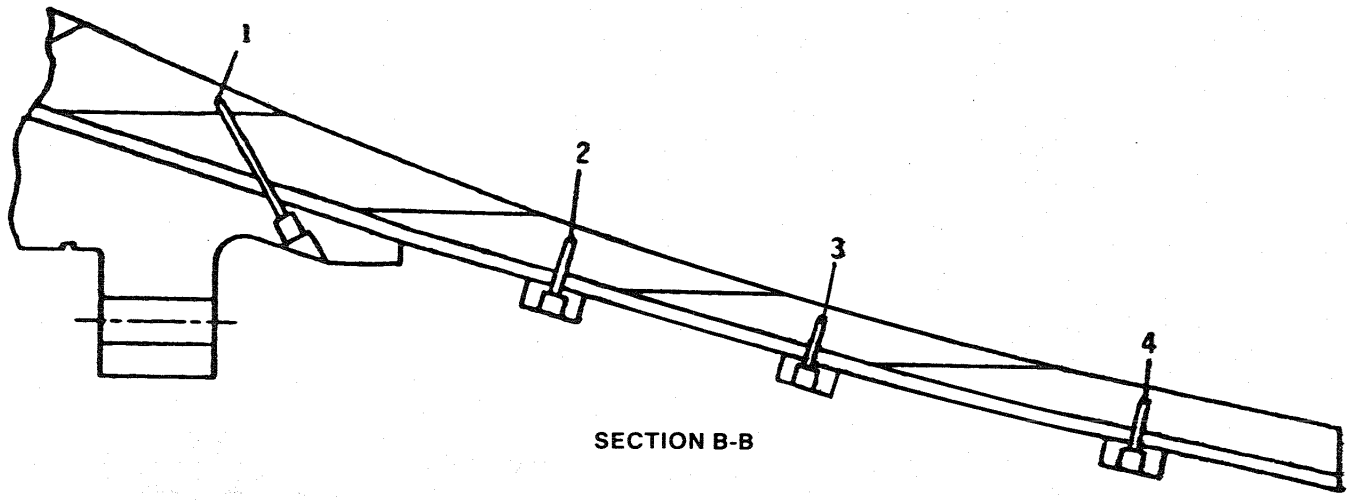

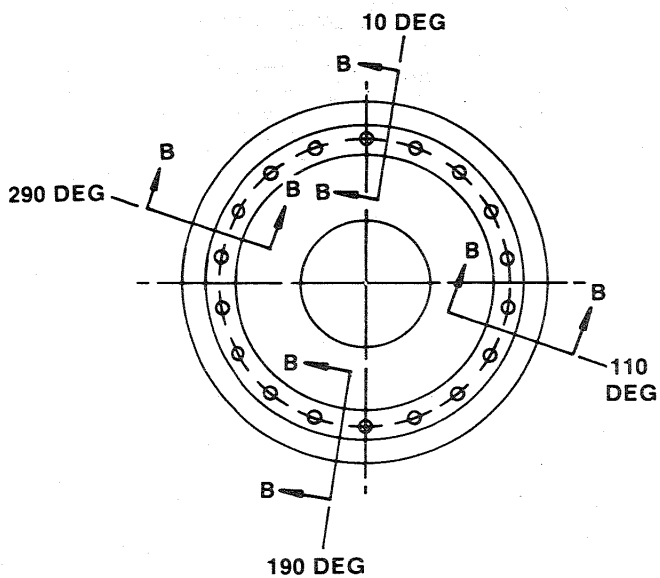

STATION	PLANE (DEG)	DEPTH BELOW FLOW CONTOUR (IN.)	THERMOCOUPLE TYPE
1	10	0.2	W 5% RE/W 26% RE
2	10	0.2	W 5% RE/W 26% RE
3	10	0.2	W 5% RE/W 26% RE
4	10	0.2	W 5% RE/W 26% RE
1	110	0.3	W 5% RE/W 26% RE
2	110	0.3	W 5% RE/W 26% RE
3	110	0.3	CHROMEL/ALUMEL
4	110	0.3	CHROMEL/ALUMEL
1	190	0.4	CHROMEL/ALUMEL
2	190	0.4	CHROMEL/ALUMEL
3	190	0.4	CHROMEL/ALUMEL
4	190	0.4	CHROMEL/ALUMEL
1	290	0.5	CHROMEL/ALUMEL
2	290	0.5	CHROMEL/ALUMEL
3	290	0.5	CHROMEL/ALUMEL
4	290	0.5	CHROMEL/ALUMEL

Figure 7. Test N-4 Nozzle Instrumentation

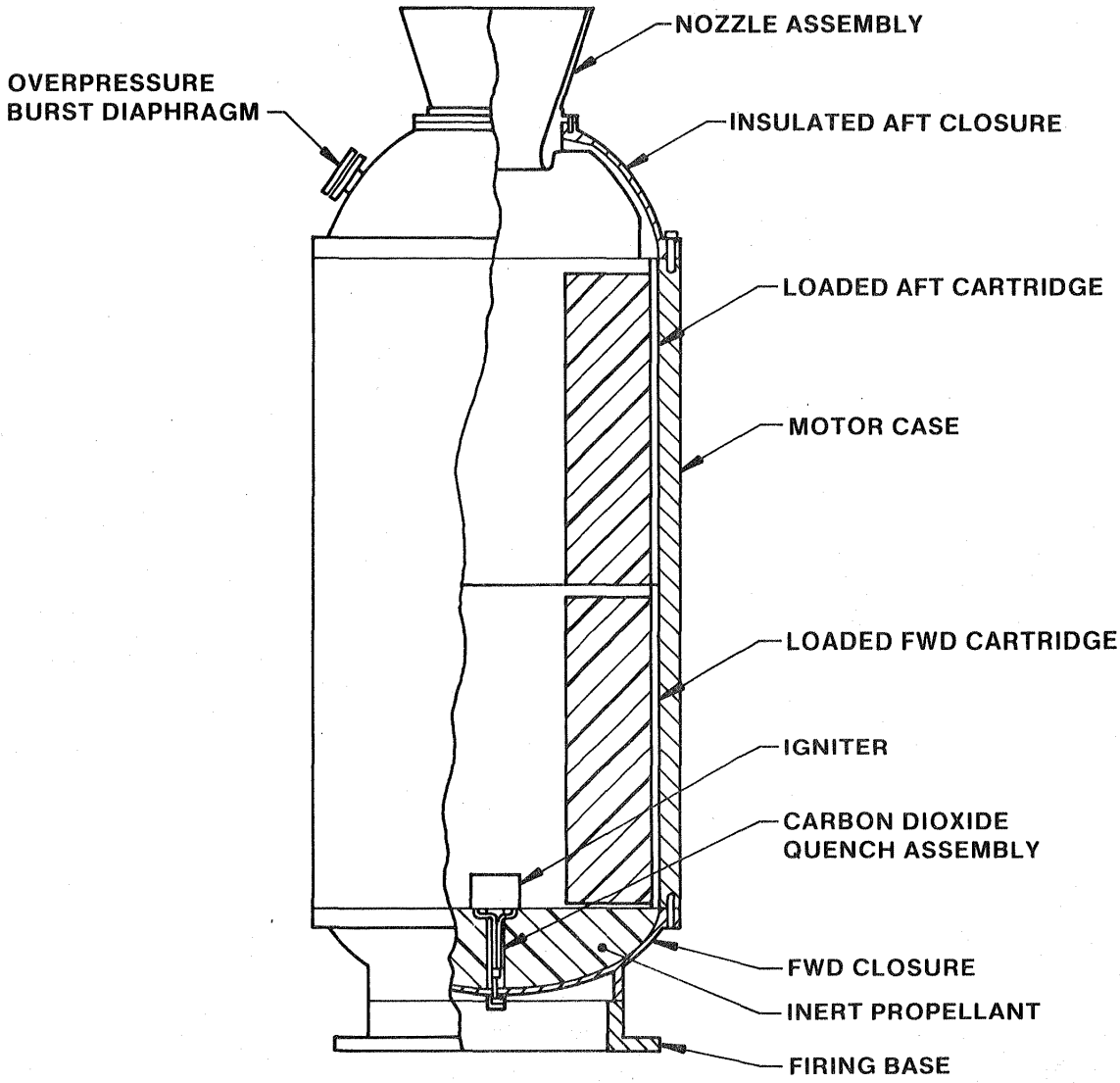

Figure 8. Test Motor Assembly

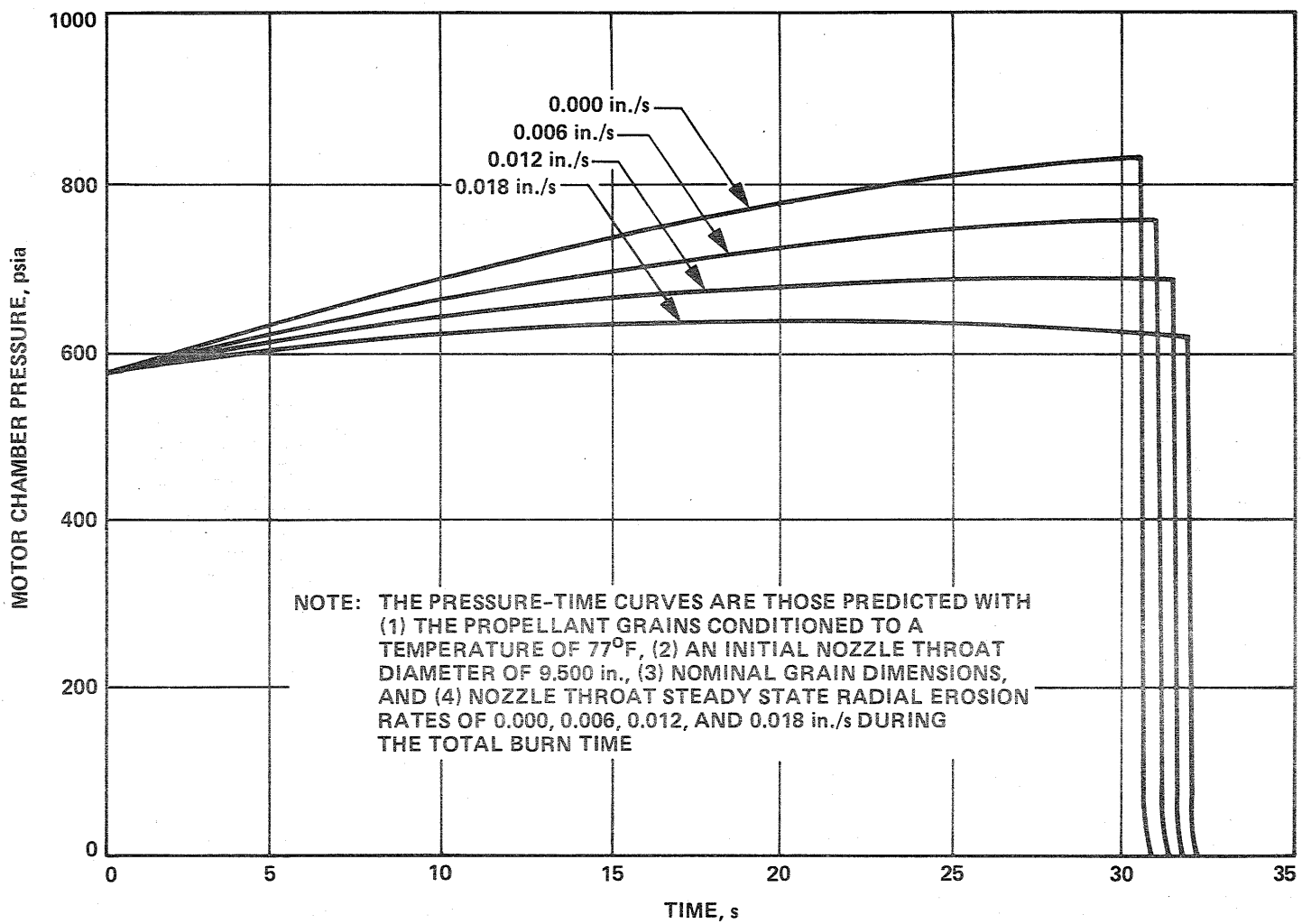

Figure 9. Predicted Chamber Pressure-Time Traces

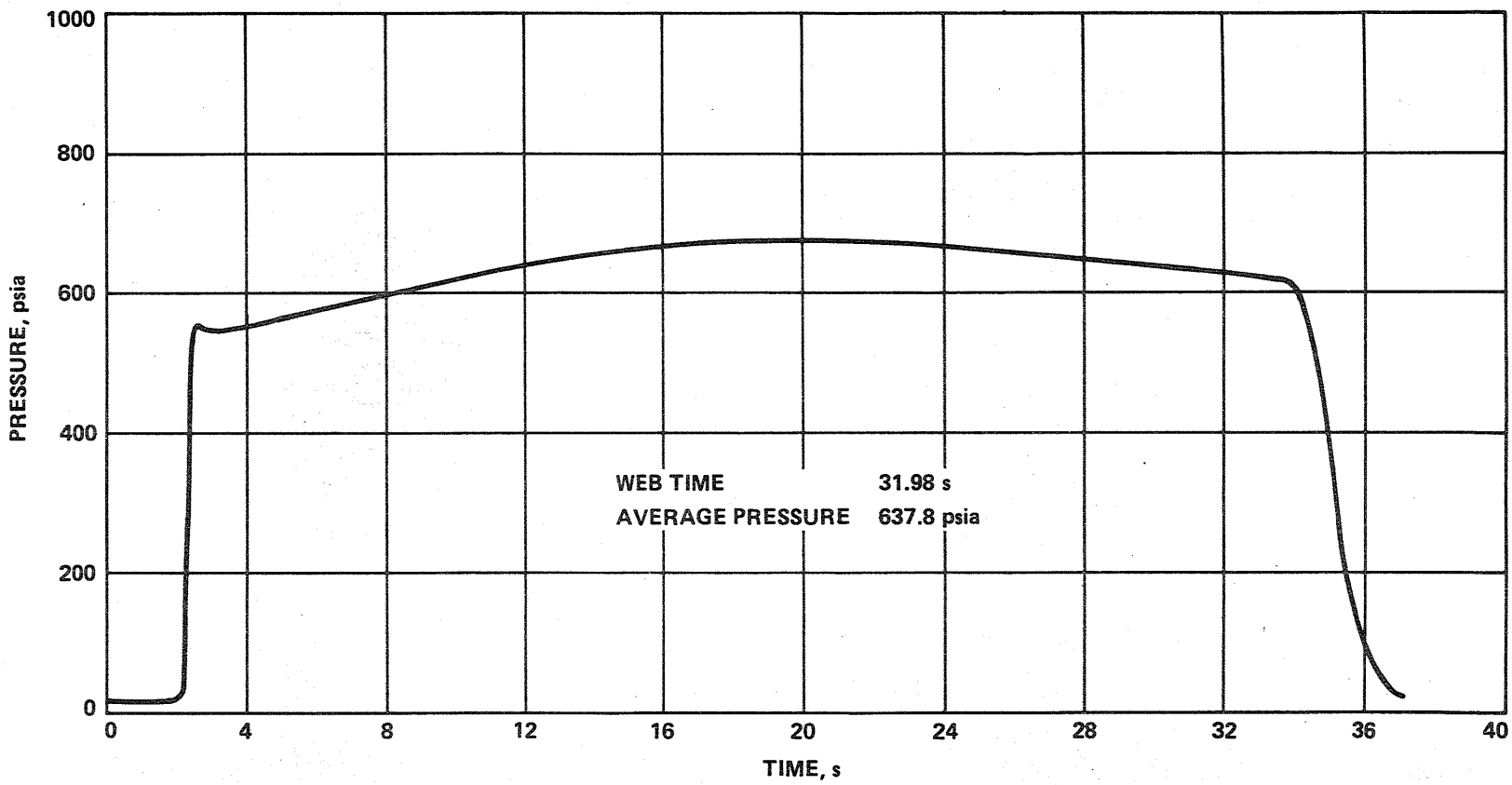

Figure 10. Test N-1 Motor Pressure-Time Curve

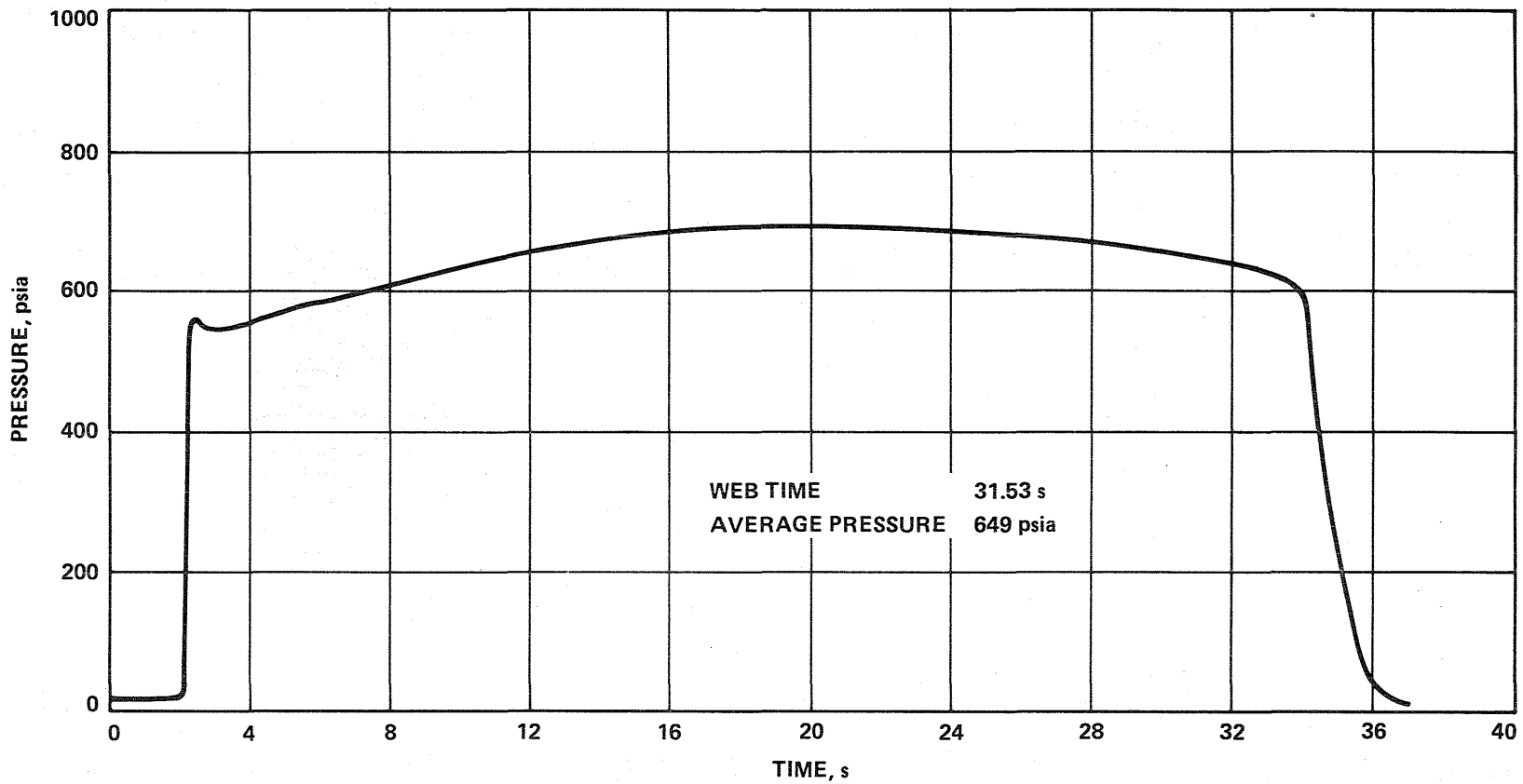

Figure 11. Test N-2 Motor Pressure-Time Curve

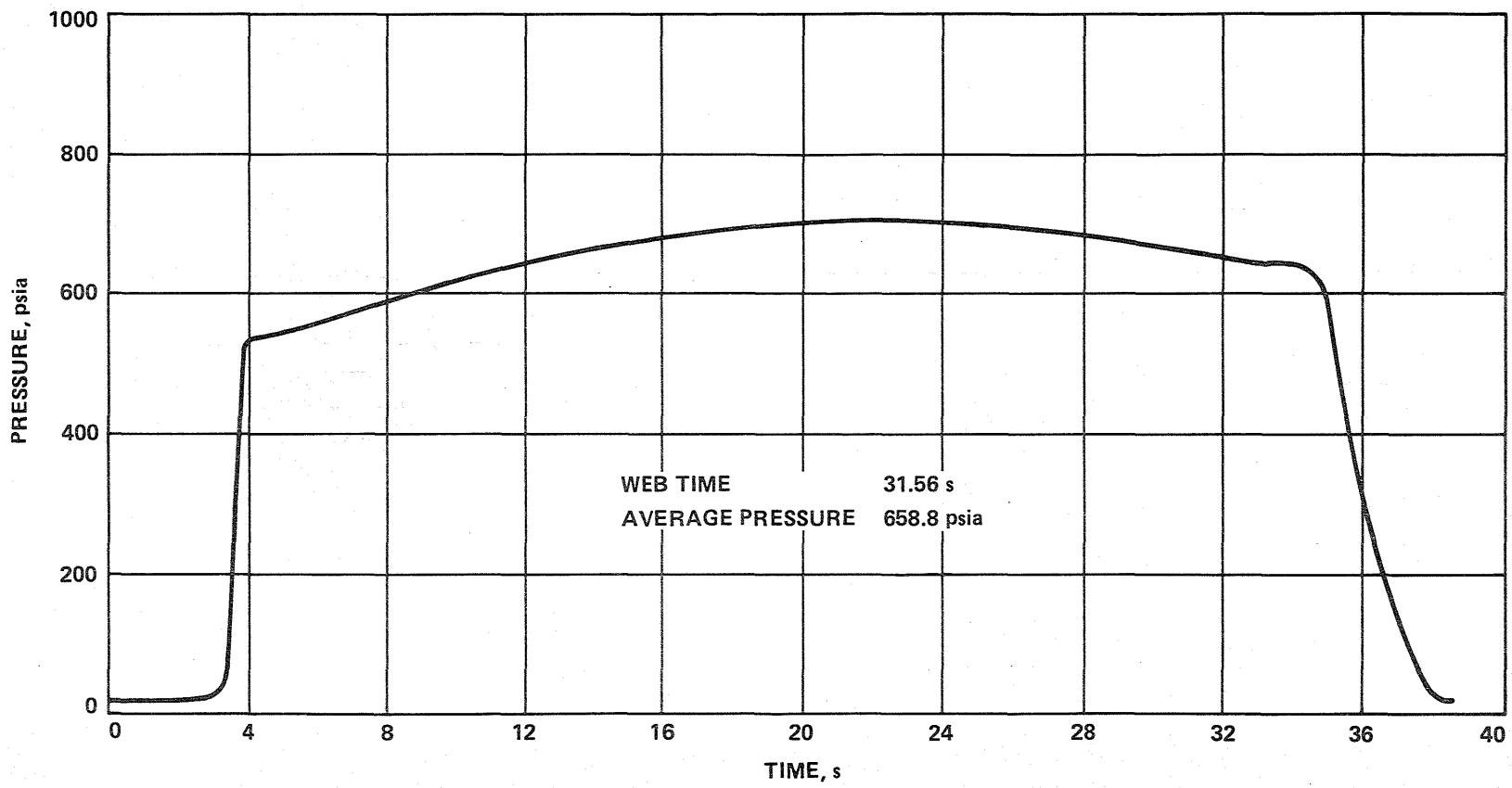

Figure 12. Test N-3 Motor Pressure-Time Curve

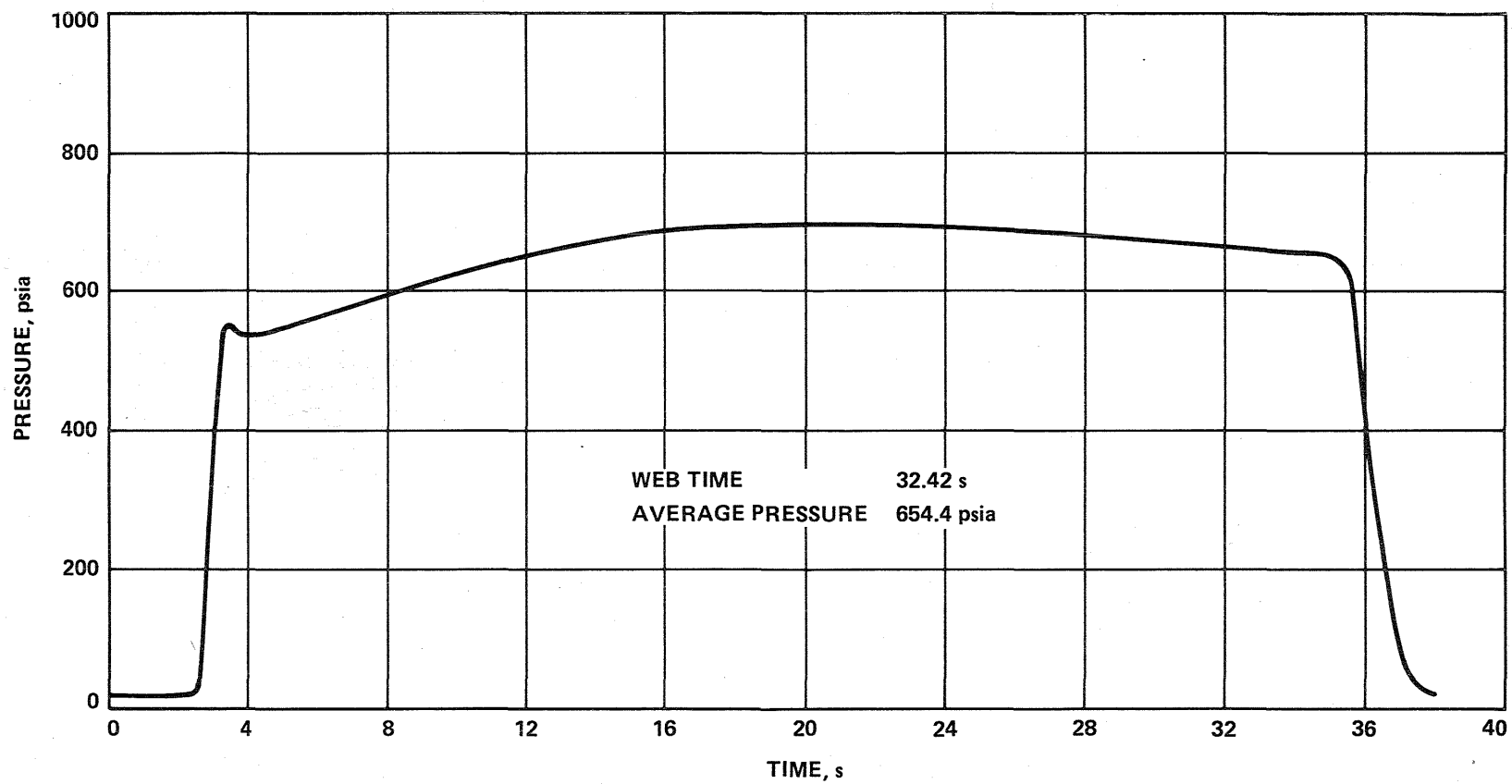

Figure 13. Test N-4 Motor Pressure-Time Curve

Table 1. Instrumentation Specifications for N-1 and N-2 Motors

Item	Parameter	Symbol	Location	Type	Range	Recorder[a]
1	Pressure, Motor #1	PC1	Aft Closure	Taber Model #206	0-2000 psig	D,A,S
2	Pressure, Motor #2	PC2	Aft Closure	Taber Model #206	0-2000 psig	D,A,S
3	Pressure, Motor #3	PC3	Aft Closure	Taber Model #206	0-2000 psig	D,A,S
4	Temperature, Nozzle #1	TN1	Nozzle	Chromel/Alumel	0-2500 °F	D,A,S
5	Temperature, Nozzle #2	TN2	Nozzle	Chromel/Alumel	0-2500 °F	D,A,S
6	Temperature, Nozzle #3	TN3	Nozzle	Chromel/Alumel	0-2500 °F	D,A,S
7	Temperature, Nozzle #4	TN4	Nozzle	Chromel/Alumel	0-2500 °F	D,A,S

[a] D = Digital recorder
A = FM analog tape
S = Strip chart

Table 2. Instrumentation Specifications for N-3 Motor

Item	Parameter	Symbol	Location	Type	Range	Recorder[a]
1	Pressure, Motor #1	PC1	Aft Closure	Taber Model #206	0-2000 psig	D,A,S
2	Pressure, Motor #2	PC2	Aft Closure	Taber Model #206	0-2000 psig	D,A,S
3	Pressure, Motor #3	PC3	Aft Closure	Taber Model #206	0-2000 psig	D,A,S
4	Temperature, Nozzle #1	T1-10	Nozzle at 10°	W 5% RE/W 26% RE	0-4200 °F	D,A,S
5	Temperature, Nozzle #2	T2-10	Nozzle at 10°	W 5% RE/W 26% RE	0-4200 °F	D,A,S
6	Temperature, Nozzle #3	T3-10	Nozzle at 10°	W 5% RE/W 26% RE	0-4200 °F	D,A,S
7	Temperature, Nozzle #4	T4-10	Nozzle at 10°	W 5% RE/W 26% RE	0-4200 °F	D,A,S
8	Temperature, Nozzle #5	T1-110	Nozzle at 110°	Chromel/Alumel	0-2500 °F	D,A,S
9	Temperature, Nozzle #6	T2-110	Nozzle at 110°	Chromel/Alumel	0-2500 °F	D,A,S
10	Temperature, Nozzle #7	T3-110	Nozzle at 110°	Chromel/Alumel	0-2500 °F	D,A,S
11	Temperature, Nozzle #8	T4-110	Nozzle at 110°	Chromel/Alumel	0-2500 °F	D,A,S
12	Temperature, Nozzle #9	T1-190	Nozzle at 190°	Chromel/Alumel	0-2500 °F	D,A,S
13	Temperature, Nozzle #10	T2-190	Nozzle at 190°	Chromel/Alumel	0-2500 °F	D,A,S
14	Temperature, Nozzle #11	T3-190	Nozzle at 190°	Chromel/Alumel	0-2500 °F	D,A,S
15	Temperature, Nozzle #12	T4-190	Nozzle at 190°	Chromel/Alumel	0-2500 °F	D,A,S
16	Temperature, Nozzle #13	T1-290	Nozzle at 290°	Chromel/Alumel	0-2500 °F	D,A,S
17	Temperature, Nozzle #14	T2-290	Nozzle at 290°	Chromel/Alumel	0-2500 °F	D,A,S
18	Temperature, Nozzle #15	T3-290	Nozzle at 290°	Chromel/Alumel	0-2500 °F	D,A,S
19	Temperature, Nozzle #16	T4-290	Nozzle at 290°	Chromel/Alumel	0-2500 °F	D,A,S

[a] D = Digital recorder
A = FM analog tape
S = Strip chart

Table 3. Instrumentation Specifications for N-4 Motor

Item	Parameter	Symbol	Location	Type	Range	Recorder[a]
1	Pressure, Motor #1	PC1	Aft Closure	Taber Model #206	0-2000 psig	D,A,S
2	Pressure, Motor #2	PC2	Aft Closure	Taber Model #206	0-2000 psig	D,A,S
3	Pressure, Motor #3	PC3	Aft Closure	Taber Model #206	0-2000 psig	D,A,S
4	Temperature, Nozzle #1	T1-10	Nozzle at 10°	W 5% RE/W 26% RE	0-4200 °F	D,A,S
5	Temperature, Nozzle #2	T2-10	Nozzle at 10°	W 5% RE/W 26% RE	0-4200 °F	D,A,S
6	Temperature, Nozzle #3	T3-10	Nozzle at 10°	W 5% RE/W 26% RE	0-4200 °F	D,A,S
7	Temperature, Nozzle #4	T4-10	Nozzle at 10°	W 5% RE/W 26% RE	0-4200 °F	D,A,S
8	Temperature, Nozzle #5	T1-110	Nozzle at 110°	W 5% RE/W 26% RE	0-4200 °F	D,A,S
9	Temperature, Nozzle #6	T2-110	Nozzle at 110°	W 5% RE/W 26% RE	0-4200 °F	D,A,S
10	Temperature, Nozzle #7	T3-110	Nozzle at 110°	Chromel/Alumel	0-2500 °F	D,A,S
11	Temperature, Nozzle #8	T4-110	Nozzle at 110°	Chromel/Alumel	0-2500 °F	D,A,S
12	Temperature, Nozzle #9	T1-190	Nozzle at 190°	Chromel/Alumel	0-2500 °F	D,A,S
13	Temperature, Nozzle #10	T2-190	Nozzle at 190°	Chromel/Alumel	0-2500 °F	D,A,S
14	Temperature, Nozzle #11	T3-190	Nozzle at 190°	Chromel/Alumel	0-2500 °F	D,A,S
15	Temperature, Nozzle #12	T4-190	Nozzle at 190°	Chromel/Alumel	0-2500 °F	D,A,S
16	Temperature, Nozzle #13	T1-290	Nozzle at 290°	Chromel/Alumel	0-2500 °F	D,A,S
17	Temperature, Nozzle #14	T2-290	Nozzle at 290°	Chromel/Alumel	0-2500 °F	D,A,S
18	Temperature, Nozzle #15	T3-290	Nozzle at 290°	Chromel/Alumel	0-2500 °F	D,A,S
19	Temperature, Nozzle #16	T4-290	Nozzle at 290°	Chromel/Alumel	0-2500 °F	D,A,S

[a] D = Digital recorder
A = FM analog tape
S = Strip chart

Table 4. Propellant Characteristics

Formulation*	
Ingredient	Percent By Weight
Ammonium Perchlorate	69.99
Aluminum	16.00
Iron Oxide	0.01
Polybutadiene acrylic acid acrylonitrile binder	14.00
Properties**	
Density, lbs/in.^{3}	0.0641

Burn Rate Equation

$$r = a P_c^n$$

r = burn rate in inches per second (0.340 at 650 psia)

a = 0.05548 (350 to 1,200 psia range)

Pc = chamber pressure in pounds per square inch absolute (psia)

n = 0.280

* JPL Formulation No. PBAN - Mod. 8
** Properties at 77°F

This Page Intentionally Left Blank

APPENDIX A

TEST NUMBER 1 STATIC TEST AND ANALYSIS REPORT

This Page Intentionally Left Blank

TWR-13870
Rev A

Space Shuttle
Alternate Nozzle Materials Program
Static Test Report
Test No. 1

1 November 1984

DR No. 5-3

Prepared For

National Aeronautics and Space Administration
George C. Marshall Space Flight Center
Marchall Space Flight Center, Alabama 35812

Contract NAS8-30490

WBS 1.4.2.3.10

MORTON THIOKOL, INC.
Wasatch Division
P.O. Box 524, Brigham City, Utah 84302 (801) 863-3511

Publications No. 85294

This Page Intentionally Left Blank

MORTON THIOKOL, INC.
Wasatch Division

TWR-13870
Rev A

SPACE SHUTTLE
ALTERNATE NOZZLE MATERIALS PROGRAM
STATIC TEST REPORT
TEST NO. 1

1 November 1984

Prepared by:

A. R. Canfield, Manager
Nozzles and Controls Department

Concurred by:

E. E. Anderson
Nozzle Design Section

G. E. Nichols
SRM Nozzle Program

CONTENTS

		Page
1.0	INTRODUCTION AND SUMMARY	1
2.0	TEST OBJECTIVE	2
3.0	DESIGN DESCRIPTION	3
4.0	POST-TEST DATA SUMMARY AND PERFORMANCE EVALUATION	11
4.1	Nozzle Post-Test Condition	11
4.2	Post-Test Erosion and Char Measurements	11
4.3	Thermocouple Data	20
5.0	DATA SUMMARY AND DATA ANALYSIS	32
6.0	CONCLUSIONS AND RECOMMENDATIONS	35

ILLUSTRATIONS

Figure		Page
1	Subscale Space Shuttle Nozzle Description	4
2	N-1 Nozzle Materials and Thermocouple Locations	6
3	N-1 Nozzle Structural Analysis	7
4	N-1 Nozzle Predicted Erosion and Char Thickness and Backside Temperature	8
5	N-1 Nozzle Nose and Throat Section	9
6	N-1 Nozzle Exit Cone Section	10
7	Nozzle Nose and Throat Section	12
8	Outside Diameter Insulation, N-1 Nozzle	13
9	Aft Exit Cone, N-1 Nozzle	14
10	N-1 Chamber Pressure Versus Time	15
11	N-1 Measured Erosion and Char Data (0 Deg)	16
12	N-1 Nozzle Erosion and Char Data (90 Deg)	17
13	N-1 Nozzle Erosion and Char Data (180 Deg)	18
14	N-1 Nozzle Erosion and Char Data (270 Deg)	19
15	N-1 Nozzle Sectioned Nose, Throat, and OD Insulator (0 Deg)	23
16	N-1 Nozzle Sectioned Nose, Throat, and OD Insulator (90 Deg)	24
17	N-1 Nozzle Sectioned Nose, Throat, and OD Insulator (180 Deg)	25
18	N-1 Nozzle Sectioned Nose, Throat, and OD Insulator (270 Deg)	26
19	Overall View Aft Exit Cone Sections	27
20	Closeup View Sectioned Cone (Aft End)	28
21	Closeup View Sectioned Cone (Center Segment)	29
22	Closeup View Sectioned Cone (Forward End)	30
23	N-1 Nozzle Temperature Versus Time	31

TABLES

Table		Page
I	Subscale Space Shuttle Nozzle Average Tag End Test Results (N-1 Nozzle)	5
II	N-1 Nozzle, Average Erosion and Char Data	21
III	Comparison of SRM and N-1 Nozzle Erosion Rates	33
IV	N-1 Subscale Design Thickness Required to Meet SRM Safety Factors	34

1.0 INTRODUCTION AND SUMMARY

The N-1 nozzle was tested 18 November 1982 and was the first of four in the subscale alternate materials evaluation series. The design simulates as near as possible the configuration and flow profiles of the full-scale SRM nozzle.

The N-1 nozzle is the baseline nozzle of the test series and contains ablative and insulative materials currently used on the SRM nozzles. The performance of the subsequent "new materials" will be compared to that of the baseline materials.

Overall performance of the N-1 nozzle was good. Erosion was generally smooth and uniform, with no gouging, pocketing or washing being experienced. Material affected depths throughout the nozzle were generally less than predicted.

Erosion rates measured in the N-1 nozzle were generally less than those experienced in the SRM nozzle. Inlet and throat erosion rates were within the range measured on the SRM nozzle while nose erosion was significantly less. Forward exit cone erosion rates were somewhat greater than measured on the SRM nozzle while the aft exit cone erosion was much less.

Post-test analysis of the data shows the nozzle to be an adequate test vehicle to obtain data to evaluate the relative merits of various ablative and insulative materials for use in the SRM nozzle. A description of the N-1 nozzle and a discussion of the test data, analysis, and material performance are presented in subsequent sections.

2.0 TEST OBJECTIVE

The test objective is to establish the erosion and char performance of the baseline SRM nozzle ablative and insulative materials in a subscale SRM nozzle for comparative purposes.

3.0 DESIGN DESCRIPTION

The nozzle is a fixed, partially submerged design consisting of a steel shell, shell insulator, nose ring, throat ring, and exit cone section. Overall geometry and contours simulate as near as possible those of the full-scale SRM nozzle. Materials and method of manufacture used to fabricate the N-1 nozzle also reflect those in the equivalent full-scale parts. The subscale nozzle is shown in Figure 1.

Specimens were taken from each ablative and insulative component and tested for residual volatiles, resin content, specific gravity, and compressive strength. The results presented in Table I are the average results from three tests. All components used in this nozzle met the specification requirements of the SRM nozzle component specifications.

Figure 2 presents the materials used in the N-1 nozzle along with the location of the four thermocouple probes used. All of the ablative materials were carbon cloth phenolic (FM-5055) supplied by U.S. Polymeric. The glass phenolic was Fiberite MXB6020. The throat, nose and shell insulator were hydroclave cured while the exit cone and throat insulation were autoclave cured. The ply angles shown are the same as for comparable SRM nozzle components. Two thermocouple probes were located in the exit cone at a nominal depth of 0.300 in. from the initial flow surface: two were located at a depth of 0.500 inch.

Figure 3 presents the results of the 1-D structural analyses of the N-1 nozzle. All components show positive margins of safety using a 1.40 factor of safety.

Figure 4 presents predicted erosion and material affected depth at selected locations. The maximum predicted backside temperature is 140°F and occurs in the aft exit cone region.

The prefire throat diameter was 9.499 in. and finished nozzle weight was 536.5 lb. Figures 5 and 6 present prefire photographs of the nozzle.

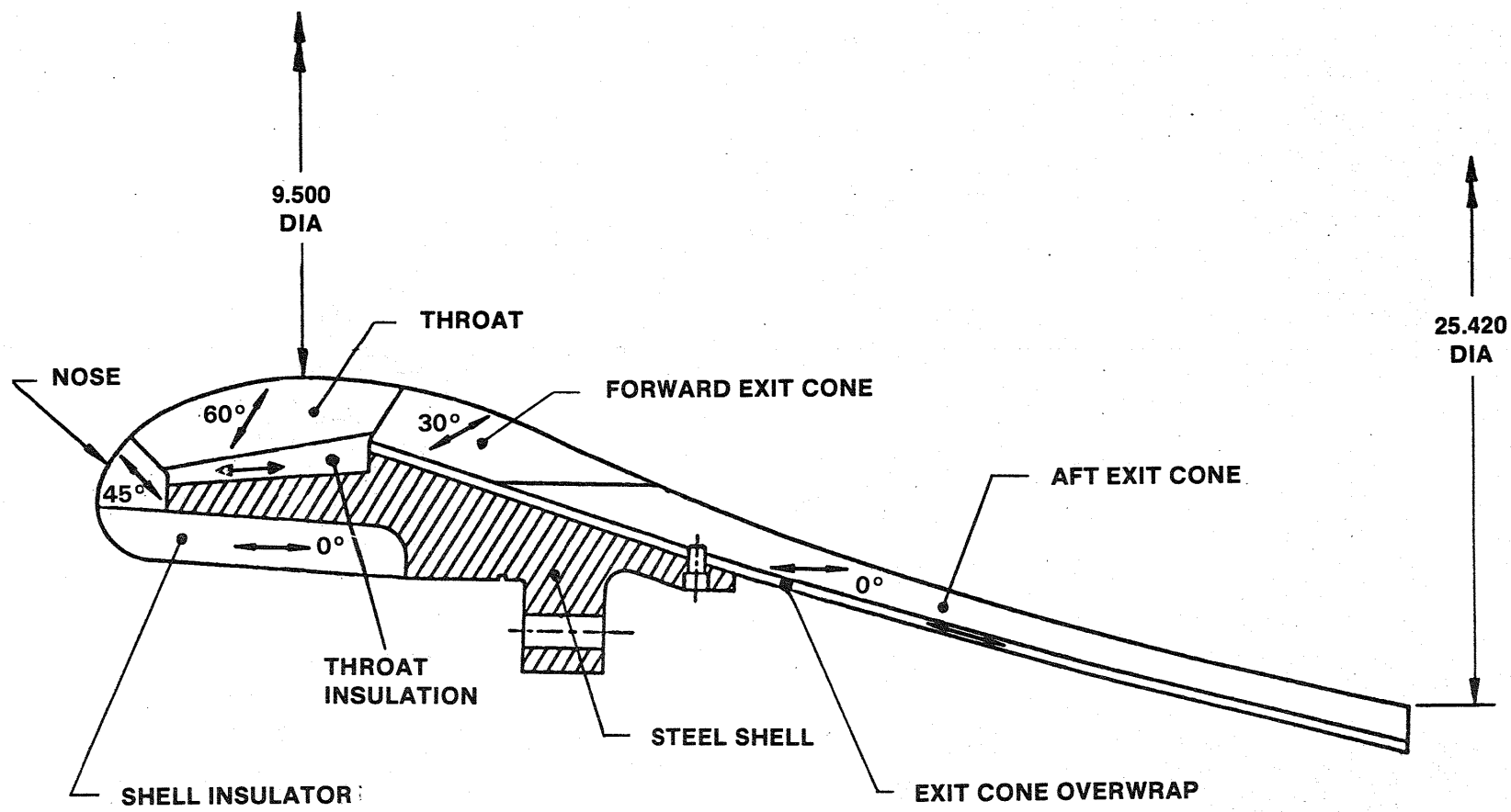

Figure 1. Subscale Space Shuttle Nozzle Description

83256-7

TABLE I

SUBSCALE SPACE SHUTTLE NOZZLE
AVERAGE TAG END TEST RESULTS
(N-1 NOZZLE)

	Residual Volatiles (%)	Resin Content (%)	Specific Gravity	Compressive Strength (psi)
Forward Exit Cone Carbon Phenolic	0.63	35.49	1.46	34,705
Aft Exit Cone Carbon Phenolic	0.59	34.11	1.47	29,736
Exit Cone Overwrap Glass Phenolic	2.33	28.58	1.97	27,959
Throat Carbon Phenolic	0.63	35.21	1.48	22,268
Throat Insulation Glass Phenolic	2.03	28.98	1.97	28,146
Nose Carbon Phenolic	0.47	35.71	1.47	36,238
Shell Insulator Carbon Phenolic	0.68	34.25	1.48	35,662
SRM Specification Limits				
Carbon Phenolic	0-3.00	30-40	1.4-1.55	18,000-55,000
Glass Phenolic	0-3.25	24-38	1.7-2.15	16,630-60,000

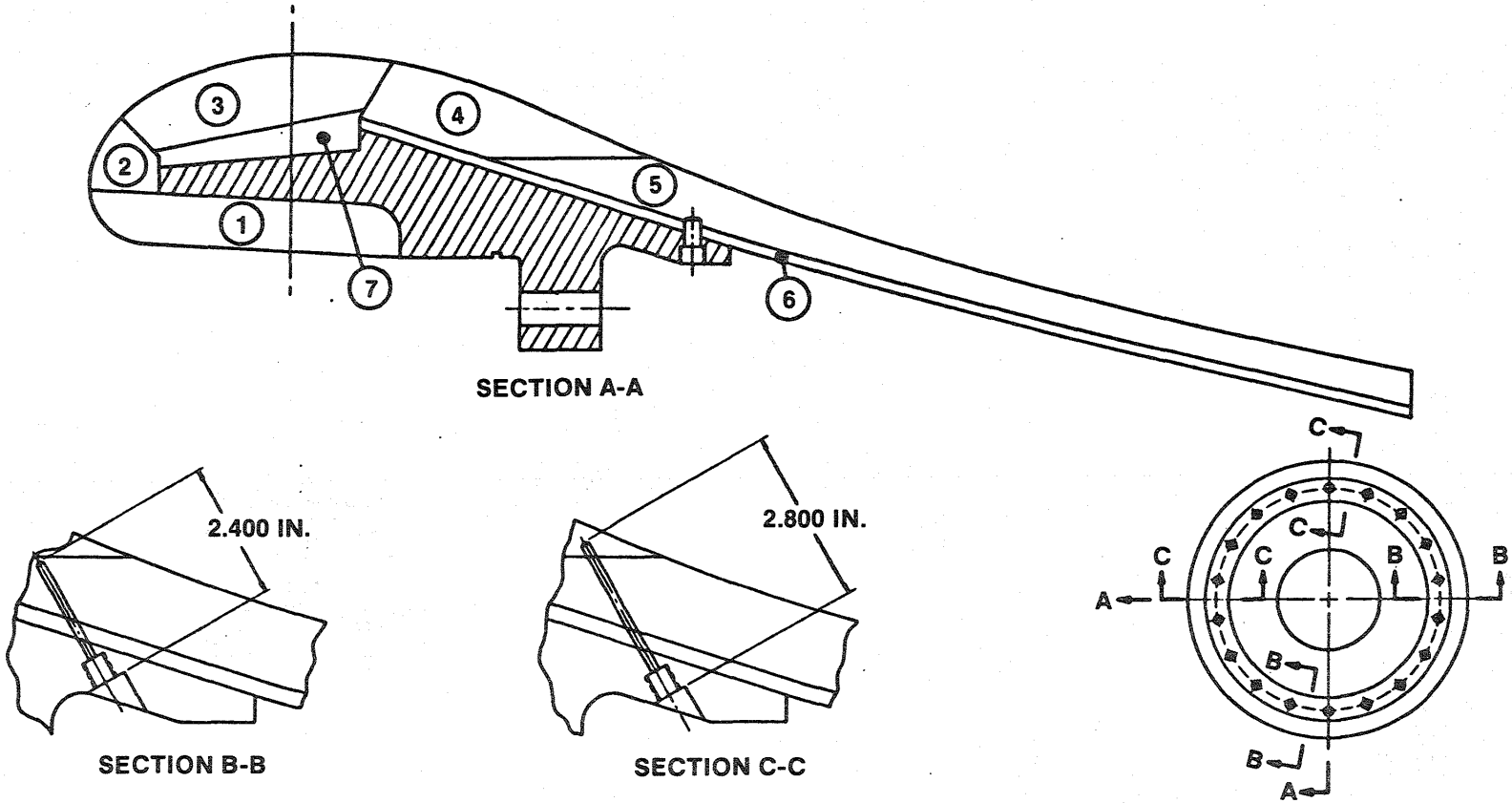

MATERIAL/VENDOR/PLY ANGLE

	1	2	3	4	5	6	7
NOZZLE NO. 1	CARBON CLOTH PHENOLIC	CARBON CLOTH PHENOLIC	CARBON CLOTH PHENOLIC	CARBON CLOTH PHENOLIC	CARBON CLOTH PHENOLIC	GLASS PHENOLIC	GLASS PHENOLIC
	←		U.S. POLY FM-5055		→	FIBERITE MXB 6020	FIBERITE MXB 6020
	PARALLEL TO ℄	45° TO ℄	60° TO ℄	30° TO ℄	PARALLEL TO ℄	PARALLEL TO OD	PARALLEL TO OD

Figure 2. N-1 Nozzle Materials and Thermocouple Locations

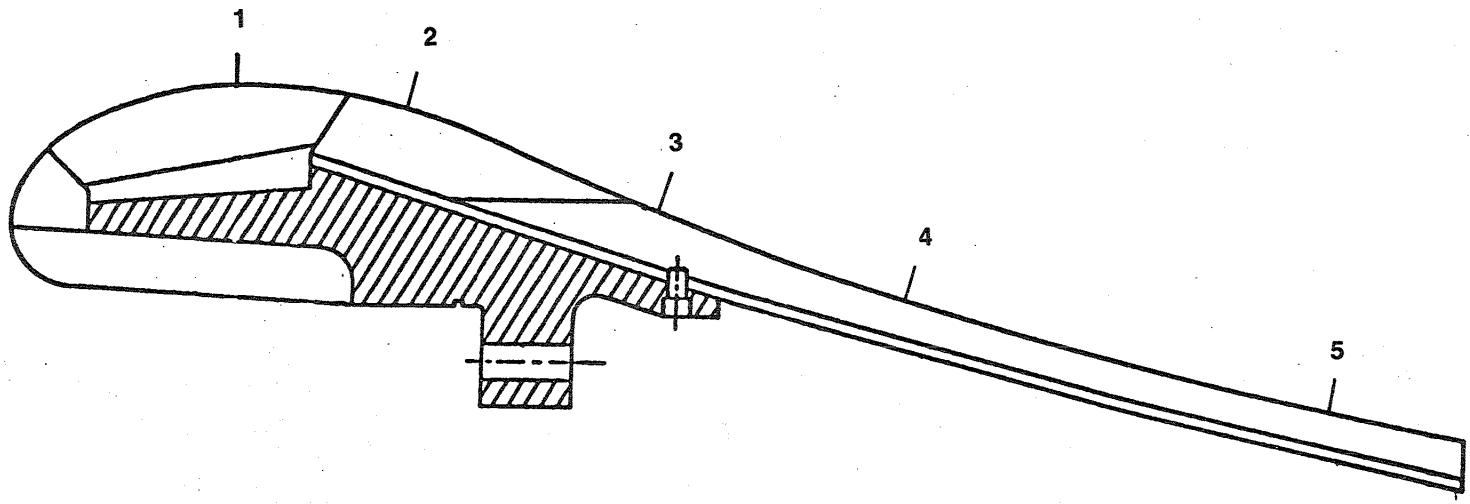

ANALYSIS POINT**	MATERIAL	STRESS TYPE	STRESS	ALLOWABLE STRESS	MS*
1	CARBON PHENOLIC	HOOP	-3,073 PSI	-14,500 PSI	2.37
2	CARBON PHENOLIC	HOOP	-4,030	-6,000	0.06
3	CARBON PHENOLIC	AXIAL	4,828	18,000	1.66
4	CARBON PHENOLIC	AXIAL	-1,620	-8,500	2.74
5	CARBON PHENOLIC	HOOP	2,763	15,500	3.00

$$*MS = \frac{\text{ALLOWABLE STRESS}}{1.4 \times \text{STRESS}} - 1 \text{ WHERE FACTOR OF SAFETY} = 1.4$$

**ALL ANALYSES WERE CONDUCTED AT 40 SEC INTO THE BURN

Figure 3. N-1 Nozzle Structural Analysis

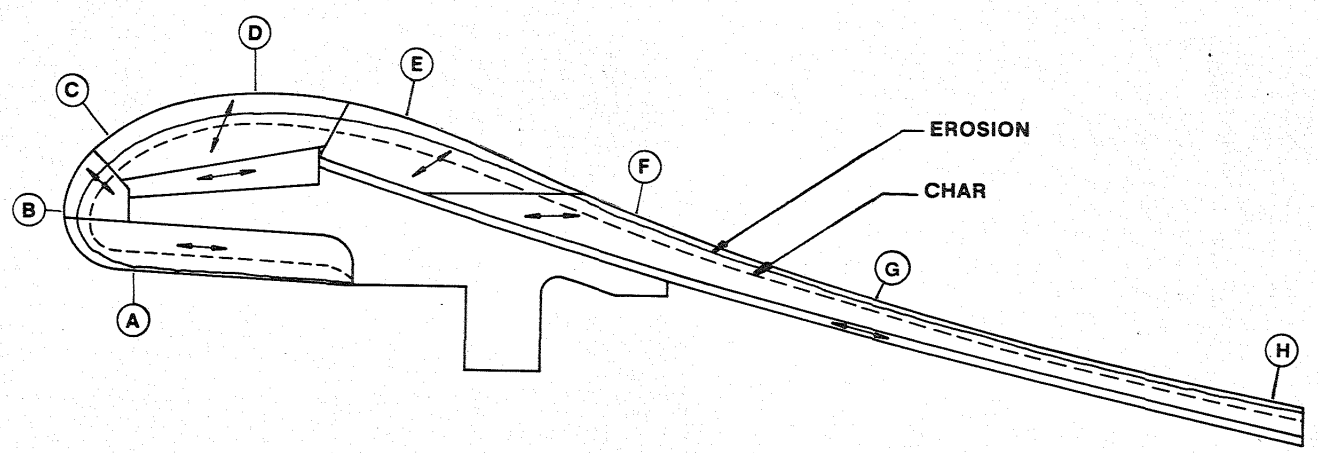

STATION	EXPANSION RATIO (A/A*)	THICKNESS (IN.)	EROSION DEPTH (IN.)	EROSION RATE (MILS/SEC)	MATERIAL(1) AFFECTED DEPTH (IN.)	MATERIAL AFFECTED RATE (MIL/SEC)	LINER BACK FACE TEMPERATURE (°F)
A	-4.0	1.25	0.102	2.5	0.51	12.7	70
B	-2.84	1.75	0.420	10.5	0.75	18.8	70
C	-1.65	1.25	0.605	15.1	0.74	18.5	75
D	1.0	1.75	0.553	13.8	0.83	20.8	70
E	1.28	1.7	0.331	8.3	0.64	16.0	79
F	2.75	1.15	0.156	3.9	0.43	10.8	74
G	4.45	0.75	0.089	2.2	0.36	9.1	140
H	7.05	0.7	0.046	1.2	0.31	7.8	140

(1) BASED UPON CHAR ZONE CRITERION = 0.27 OR $\rho_s = 78 \frac{LB}{FT^3}$ WHERE $\rho_o = 91.3$, $\rho_c = 73.4$

MATERIAL AFFECTED DEPTH = EROSION + CHAR DEPTH

Figure 4. N-1 Nozzle Predicted Erosion and Char Thickness and Backside Temperatures

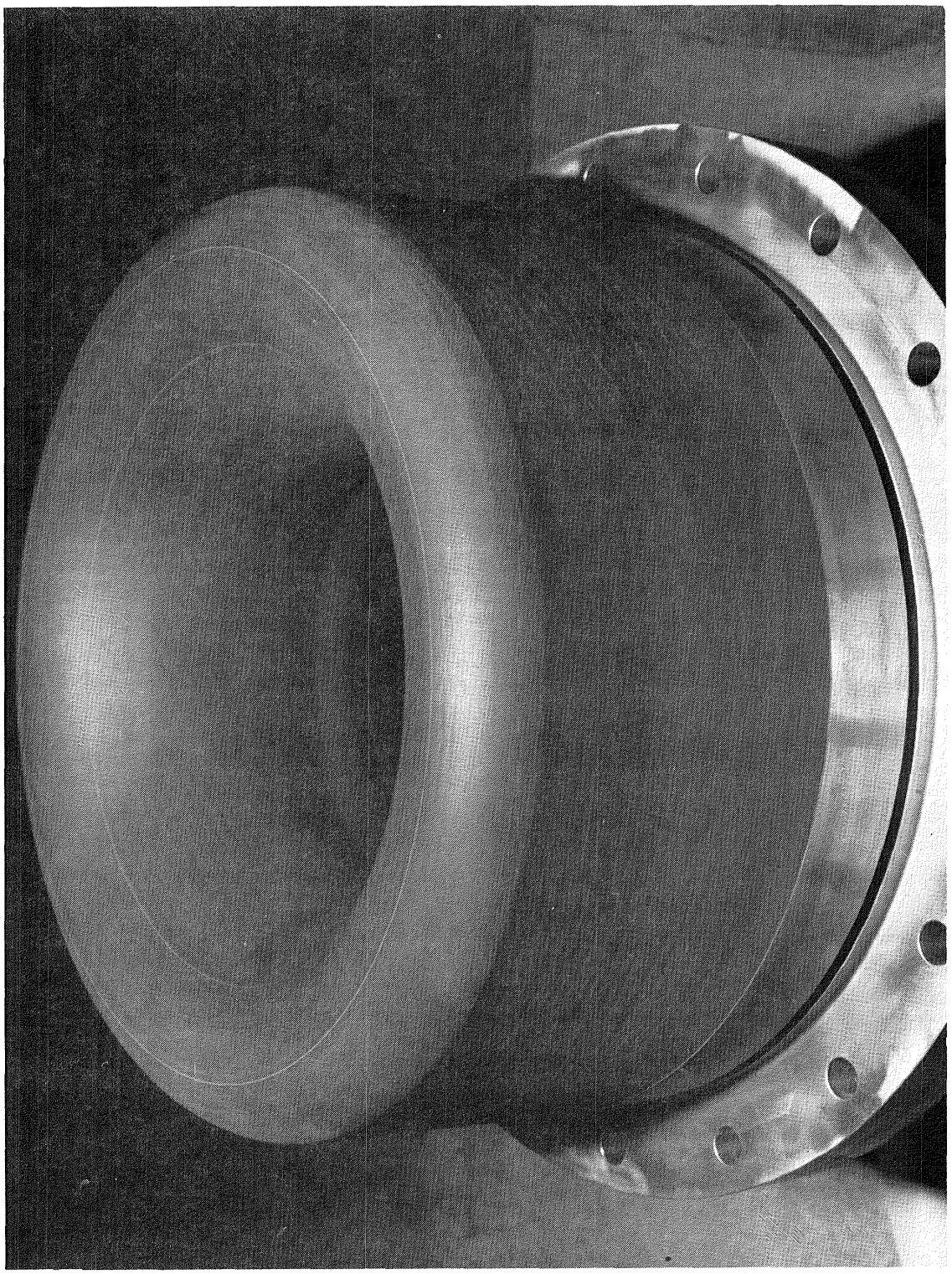

Figure 5. N-1 Nozzle Nose and Throat Section

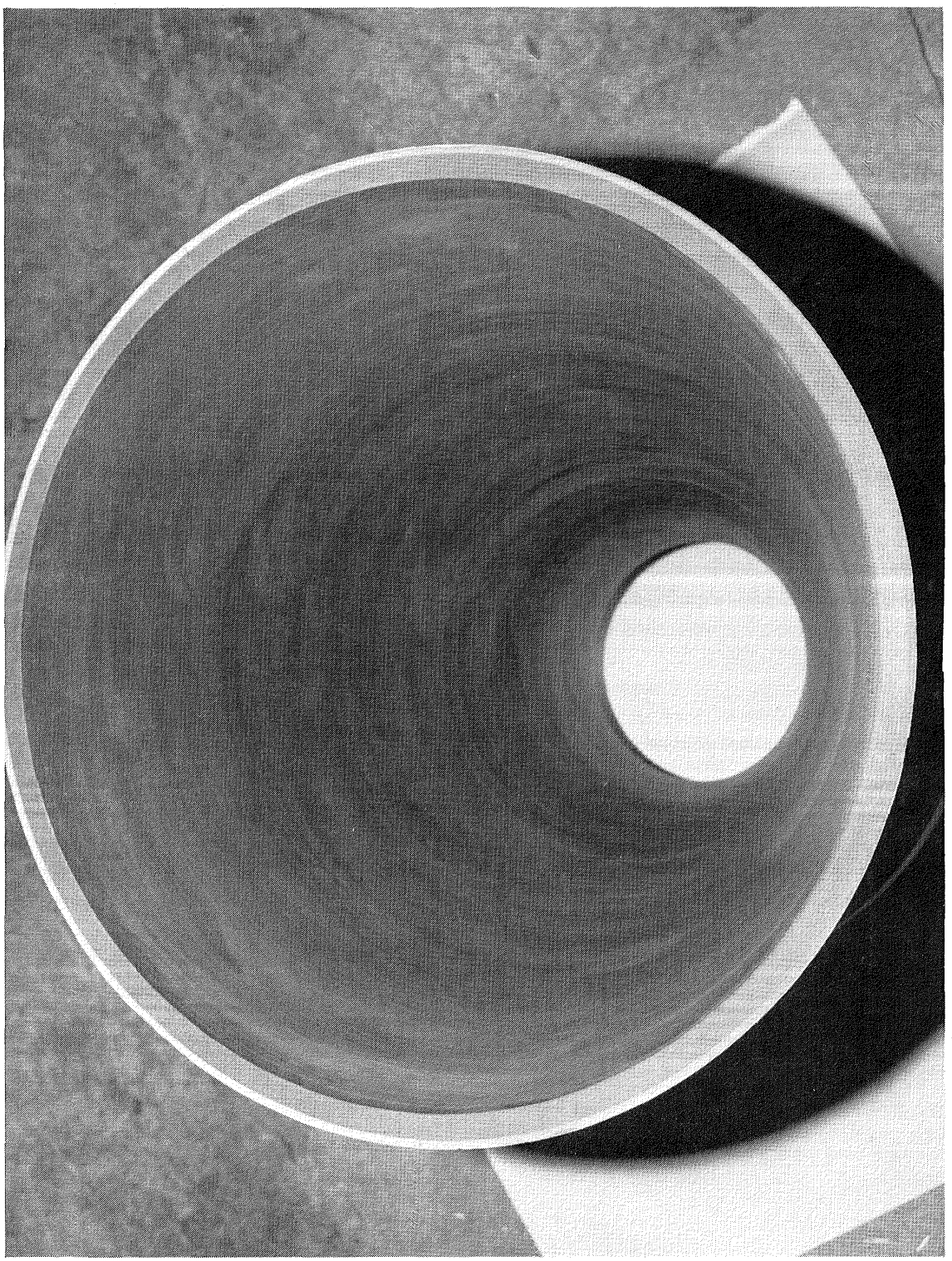

Figure 6. N-1 Nozzle Exit Cone Section

4.0 POST-TEST DATA SUMMARY AND PERFORMANCE EVALUATION

4.1 NOZZLE POST-TEST CONDITION

Overall condition of the N-1 nozzle after testing was good. Erosion at the nose, through the throat and aft exit cone was quite smooth, uniform, and symmetrical. Typical separations and delaminations, due to heat soak, quench, and cooldown were noted in the carbon phenolic materials, particularly in the OD shell insulator and the aft section of the exit cone where material ply orientation is parallel to centerline. The condition of the nozzle is graphically shown in Figures 7, 8, and 9.

Figure 10 presents the pressure-time trace for the N-1 motor. The average web burn pressure was 637.8 psi and the web burn time was 31.98 sec.

4.2 POST-TEST EROSION AND CHAR MEASUREMENTS

Erosion rates were calculated using average web burn time. Measured throat erosion rates were calculated using one-half of the average difference of six prefire and postfire diametrical throat measurements. Erosion at other locations was recorded using measurements taken from the cross sectioned nozzle. Char thickness was obtained by direct measurement taken on the sectioned nozzle components.

The average prefire nozzle throat was 9.499 inches. The postfire throat diameters are as follows:

THROAT DIAMETER (in.)						
0 Deg	30 Deg	60 Deg	90 Deg	120 Deg	150 Deg	Average
10.152	10.149	10.143	10.163	10.148	10.142	10.150

The average throat erosion rate based on an average web time of 31.98 sec and the Morton Thiokol postfire diametrical measurements is 10.18 mil/sec.

Erosion profiles taken every 90 deg from nozzle cross sections are shown in Figures 11 through 14. Also shown are measured eroded depths, material affected depths, and calculated erosion rates as a function of initial area ration. The material affected depth is the perpendicular distance from the initial uneroded surface to the char line. Stations 0, 1,

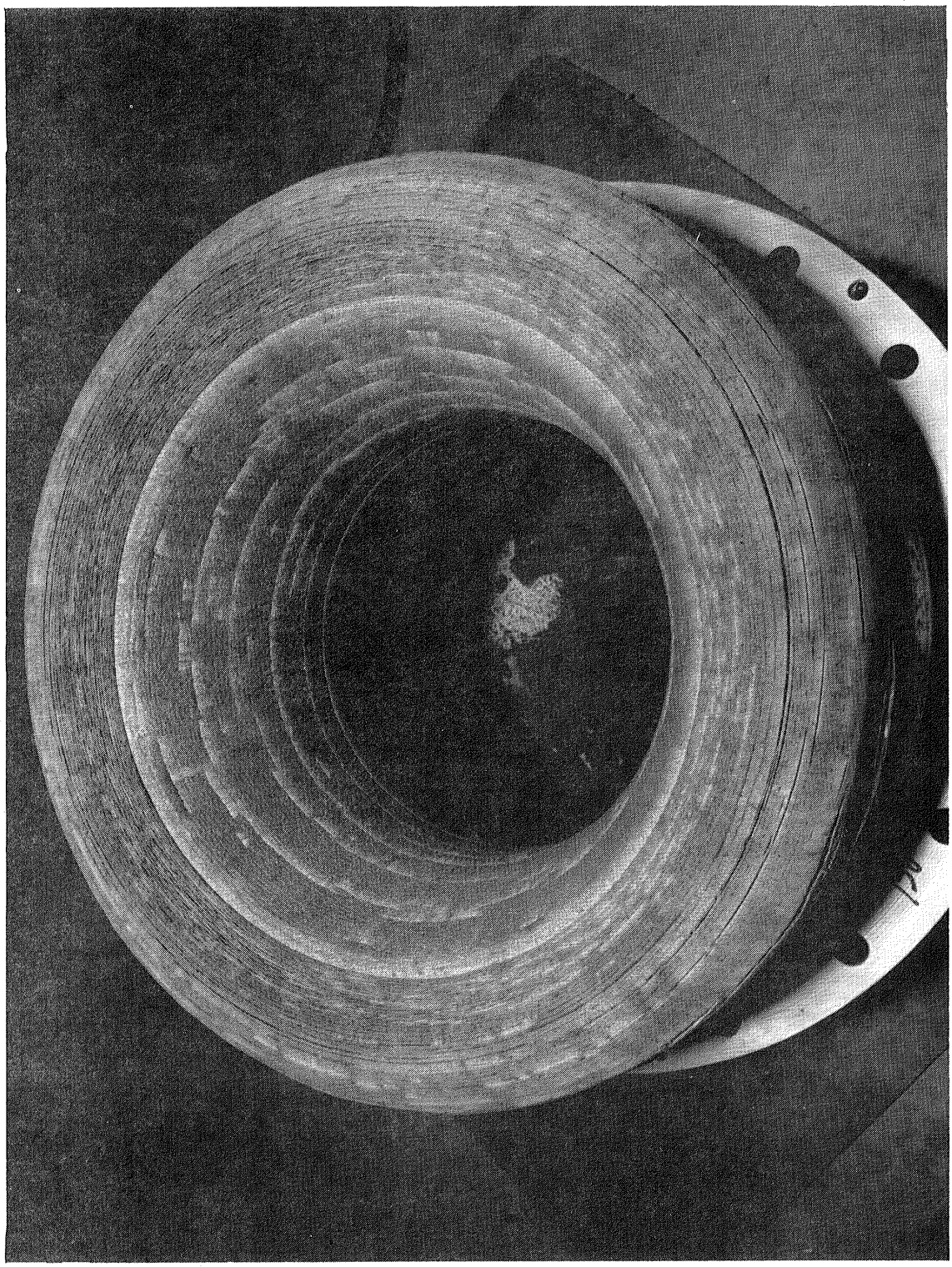

Figure 7. Nozzle Nose and Throat Section

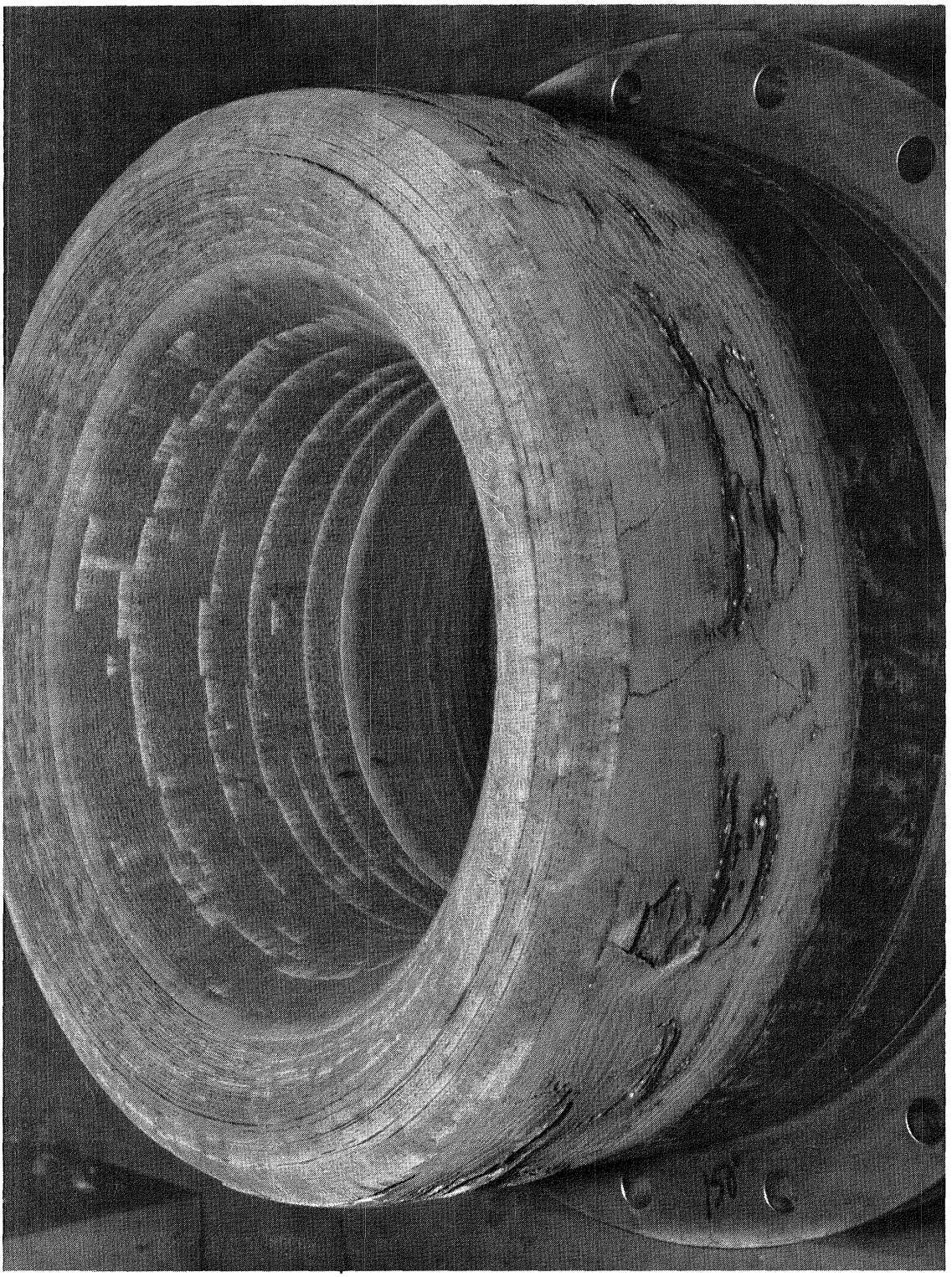

Figure 8. Outside Diameter Insulation, N-1 Nozzle

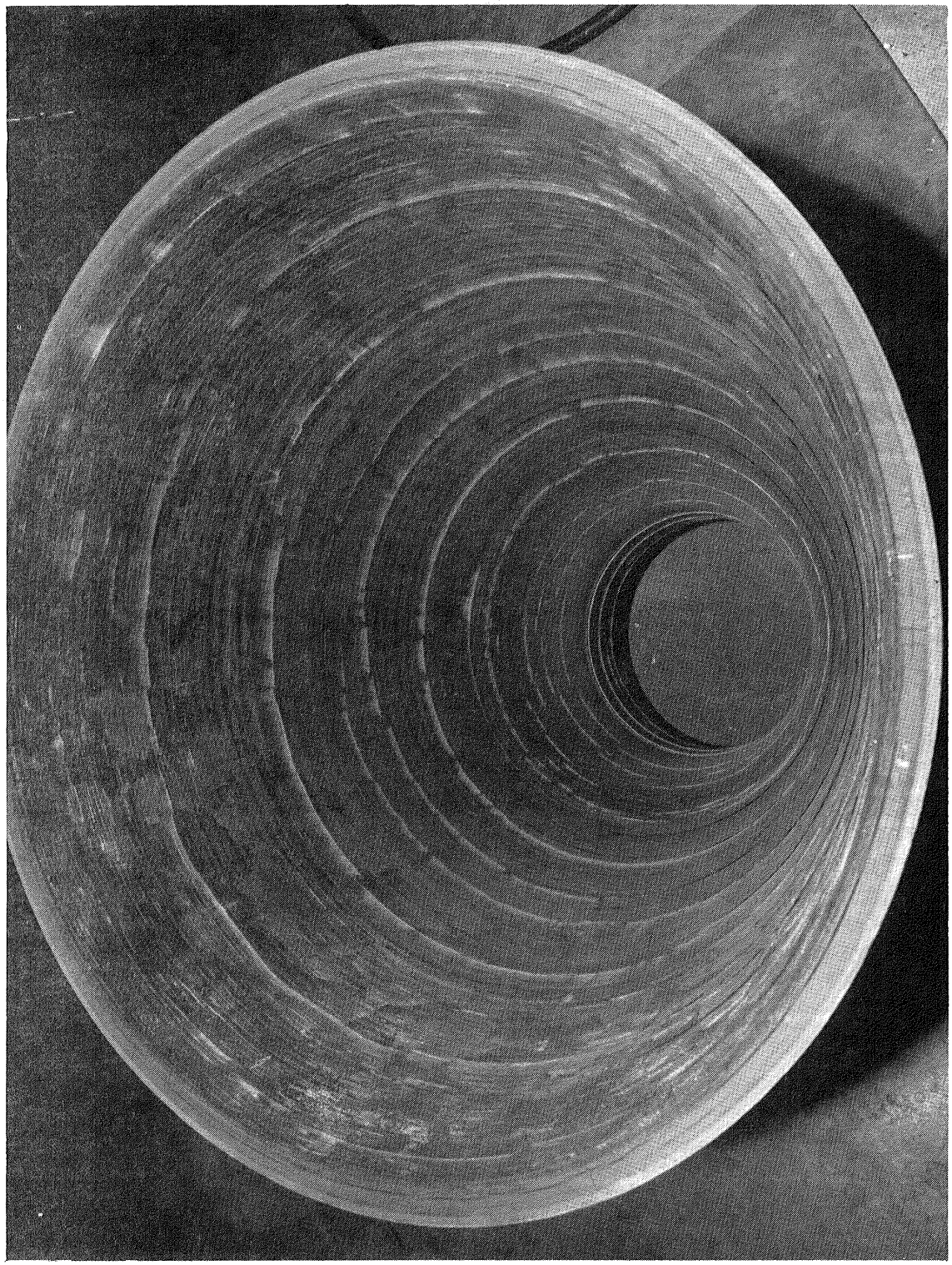

Figure 9. Aft Exit Cone, N-1 Nozzle

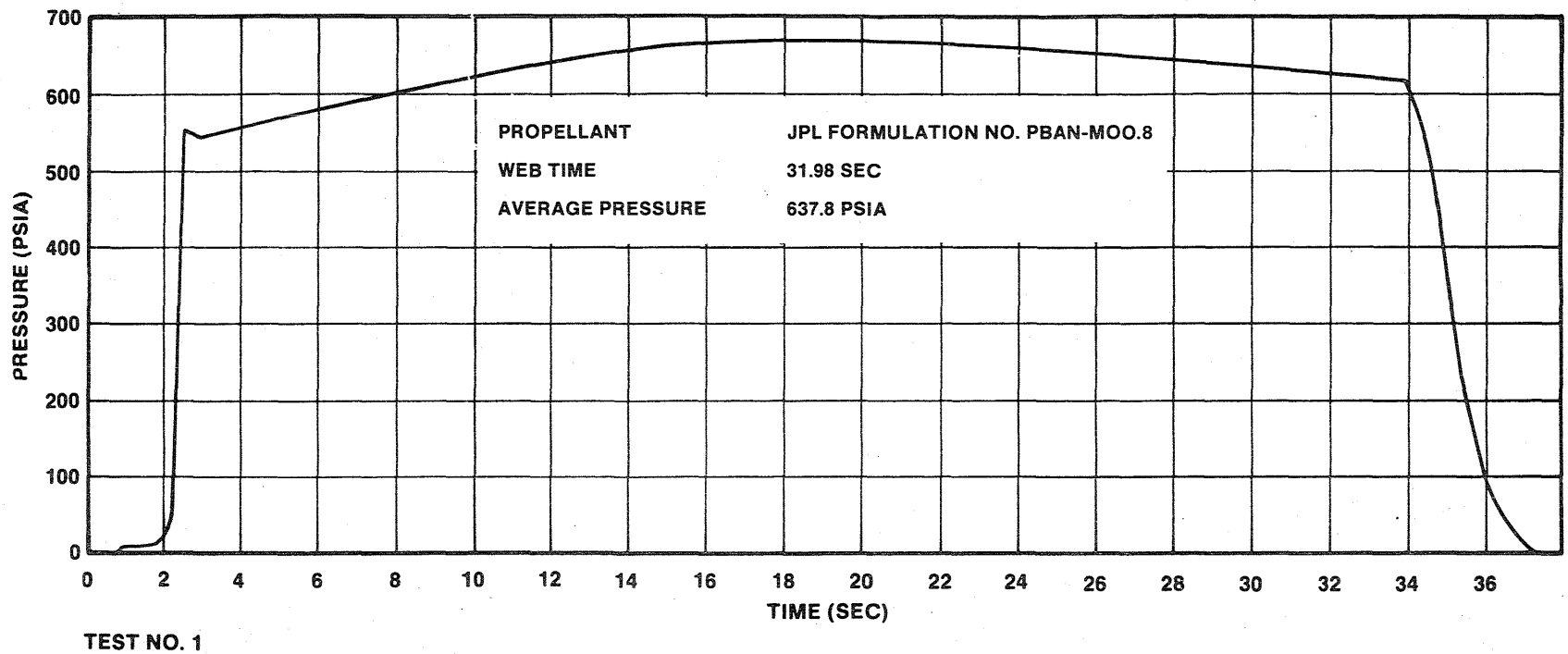

Figure 10. N-1 Chamber Pressure Versus Time

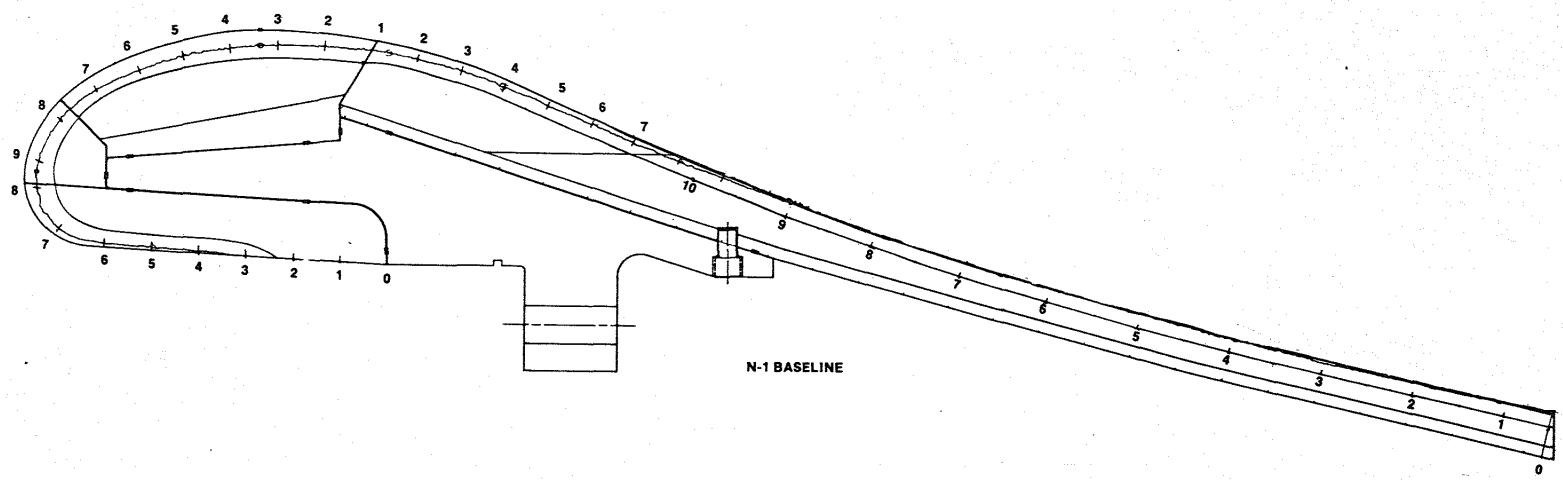

SHELL INSULATION

STATION	A/A*	ERODED DEPTH (IN.)	MATERIAL AFFECTED DEPTH (IN.)	EROSION RATE (MILS/SEC)
1	4.08	0	0	0
2	4.08	0	0	0
3	4.08	0	0.27	0
4	4.03	0.02	0.33	0.62
5	4.00	0.07	0.33	2.18
6	3.96	0.08	0.36	2.49
7	3.75	0.18	0.55	5.61
8	3.09	0.26	0.65	8.10

NOSE AND THROAT

STATION	A/A*	ERODED DEPTH (IN.)	MATERIAL AFFECTED DEPTH (IN.)	EROSION RATE (MILS/SEC)
9	2.42	0.27	0.60	8.41
8	1.68	0.27	0.55	8.41
7	1.52	0.18	0.50	5.61
6	1.27	0.31	0.51	9.66
5	1.10	0.32	0.58	9.97
4	1.02	0.34	0.60	10.59
3	1.01	0.30	0.59	9.34
2	1.02	0.27	0.56	8.41
1	1.08	0.21	0.46	6.54

FORWARD EXIT CONE

STATION	A/A*	ERODED DEPTH (IN.)	MATERIAL AFFECTED DEPTH (IN.)	EROSION RATE (MILS/SEC)
2	1.10	0.19	0.43	5.92
3	1.29	0.16	0.43	4.98
4	1.44	0.17	0.41	5.30
5	1.67	0.15	0.40	4.67
6	1.90	0.11	0.38	3.43
7	2.14	0.11	0.34	3.43

AFT EXIT CONE

STATION	A/A*	ERODED DEPTH (IN.)	MATERIAL AFFECTED DEPTH (IN.)	EROSION RATE (MILS/SEC)
10	2.63	0.06	0.32	1.87
9	3.00	0.01	0.32	0.31
8	3.47	0	0.29	0
7	3.98	0	0.31	0
6	4.33	0	0.25	0
5	4.96	0	0.26	0
4	5.44	0	0.23	0
3	5.88	0	0.22	0
2	6.33	0	0.25	0
1	6.76	0	0.27	0

Figure 11. N-1 Measured Erosion and Char Data (0 Deg)

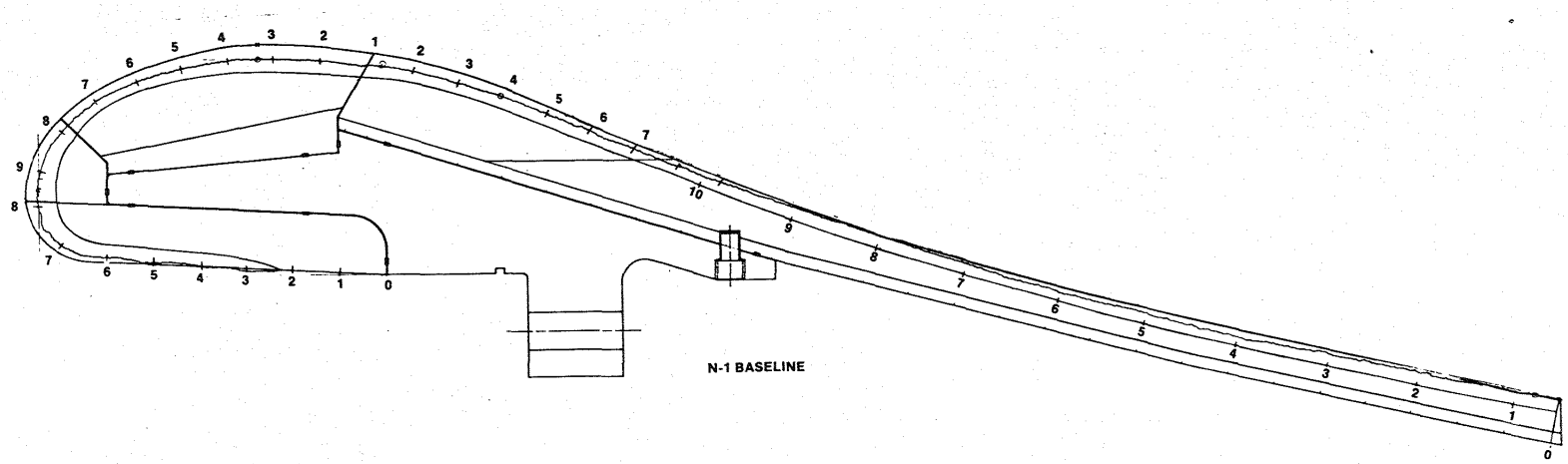

SHELL INSULATION

STATION	A/A*	ERODED DEPTH (IN.)	MATERIAL AFFECTED DEPTH (IN.)	EROSION RATE (MILS/SEC)
1	4.08	0	0	0
2	4.08	0	0	0
3	4.08	0	0.20	0
4	4.03	0	0.30	0
5	4.00	0.05	0.36	1.56
6	3.96	0.10	0.39	3.12
7	3.75	0.18	0.54	5.61
8	3.09	0.25	0.65	7.79

NOSE AND THROAT

STATION	A/A*	ERODED DEPTH (IN.)	MATERIAL AFFECTED DEPTH (IN.)	EROSION RATE (MILS/SEC)
9	2.42	0.24	0.60	7.48
8	1.68	0.21	0.50	6.54
7	1.52	0.18	0.40	5.61
6	1.27	0.21	0.41	6.54
5	1.10	0.22	0.48	6.85
4	1.02	0.30	0.57	9.34
3	1.01	0.31	0.59	9.66
2	1.02	0.31	0.59	9.66
1	1.08	0.25	0.52	7.79

FORWARD EXIT CONE

STATION	A/A*	ERODED DEPTH (IN.)	MATERIAL AFFECTED DEPTH (IN.)	EROSION RATE (MILS/SEC)
2	1.10	0.24	0.48	7.48
3	1.29	0.23	0.46	7.16
4	1.44	0.19	0.44	5.92
5	1.67	0.15	0.41	4.67
6	1.90	0.13	0.39	4.05
7	2.14	0.11	0.34	3.43

AFT EXIT CONE

STATION	A/A*	ERODED DEPTH (IN.)	MATERIAL AFFECTED DEPTH (IN.)	EROSION RATE (MILS/SEC)
10	2.63	0.11	0.31	3.43
9	3.00	0.02	0.31	0.62
8	3.47	0.04	0.32	1.25
7	3.98	0.06	0.30	1.87
6	4.33	0.06	0.25	1.87
5	4.96	0.03	0.26	0.93
4	5.44	0.05	0.29	1.55
3	5.88	0	0.22	0
2	6.33	0	0.24	0
1	6.76	0	0.26	0

Figure 12. N-1 Nozzle Erosion and Char Data (90 Deg)

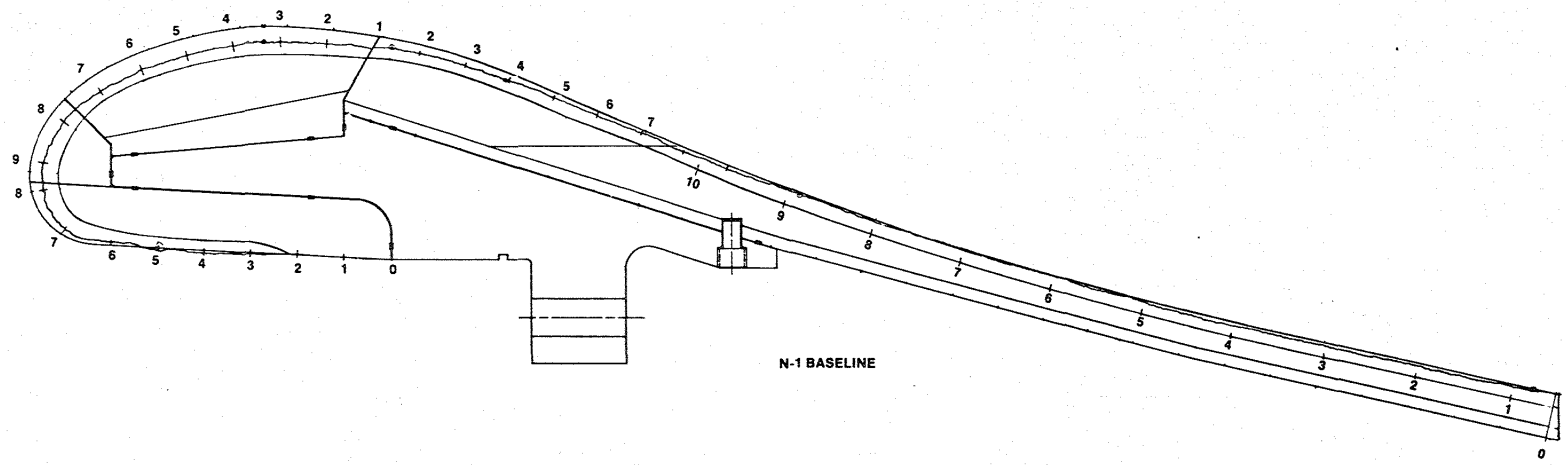

SHELL INSULATION

STATION	A/A*	ERODED DEPTH (IN.)	MATERIAL AFFECTED DEPTH (IN.)	EROSION RATE (MILS/SEC)
1	4.08	0	0	0
2	4.08	0	0	0
3	4.08	0	0.22	0
4	4.03	0	0.21	0
5	4.00	0	0.23	0
6	3.96	0.08	0.34	2.49
7	3.75	0.12	0.47	3.73
8	3.09	0.25	0.60	7.79

NOSE AND THROAT

STATION	A/A*	ERODED DEPTH (IN.)	MATERIAL AFFECTED DEPTH (IN.)	EROSION RATE (MILS/SEC)
9	2.42	0.27	0.62	8.41
8	1.68	0.30	0.60	9.34
7	1.52	0.35	0.57	10.91
6	1.27	0.34	0.58	10.59
5	1.10	0.36	0.59	11.22
4	1.02	0.34	0.59	10.59
3	1.01	0.33	0.60	10.28
2	1.02	0.30	0.55	9.34
1	1.08	0.24	0.47	7.48

FORWARD EXIT CONE

STATION	A/A*	ERODED DEPTH (IN.)	MATERIAL AFFECTED DEPTH (IN.)	EROSION RATE (MILS/SEC)
2	1.10	0.18	0.41	5.61
3	1.29	0.17	0.40	5.30
4	1.44	0.14	0.39	4.36
5	1.67	0.11	0.38	3.43
6	1.90	0.09	0.34	2.80
7	2.14	0.04	0.29	1.25

AFT EXIT CONE

STATION	A/A*	ERODED DEPTH (IN.)	MATERIAL AFFECTED DEPTH (IN.)	EROSION RATE (MILS/SEC)
10	2.63	0.04	0.30	1.25
9	3.00	0	0.29	0
8	3.47	0.03	0.31	0.93
7	3.98	0.01	0.30	0.31
6	4.33	0	0.26	0
5	4.96	0	0.25	0
4	5.44	0	0.23	0
3	5.88	0	0.23	0
2	6.33	0	0.23	0
1	6.76	0	0.25	0

Figure 13. N-1 Nozzle Erosion and Char Data (180 Deg)

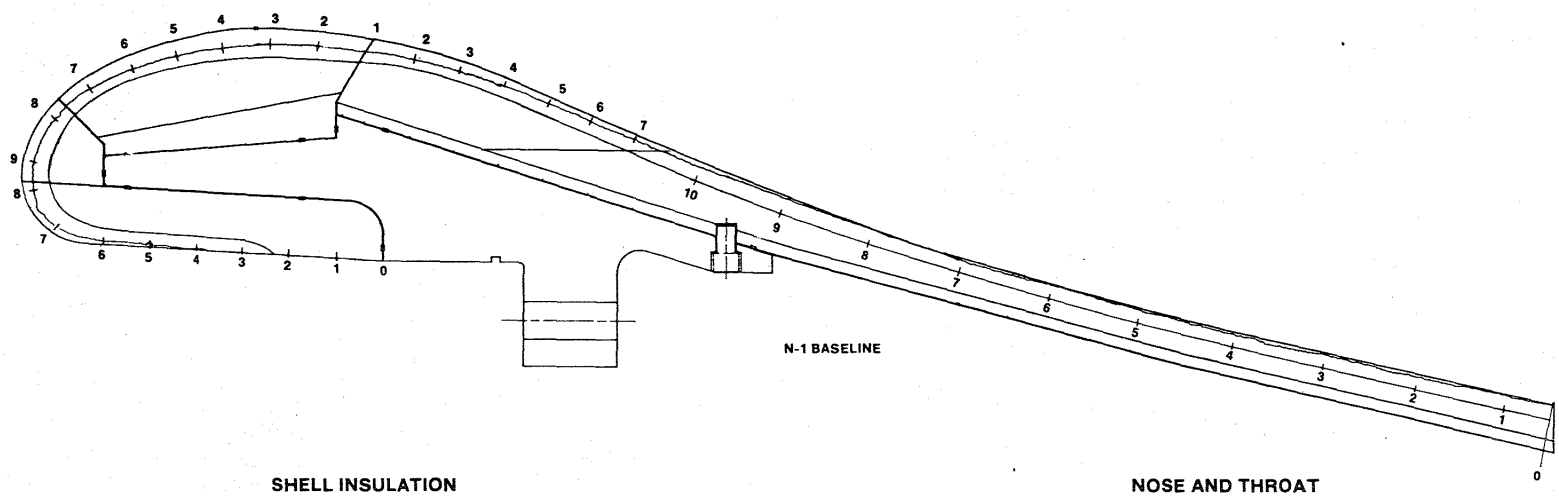

SHELL INSULATION

STATION	A/A*	ERODED DEPTH (IN.)	MATERIAL AFFECTED DEPTH (IN.)	EROSION RATE (MILS/SEC)
1	4.08	0	0	0
2	4.08	0	0	0
3	4.08	0	0.27	0
4	4.03	0	0.30	0
5	4.00	0.07	0.30	2.18
6	3.96	0.08	0.35	2.49
7	3.75	0.15	0.52	4.67
8	3.09	0.22	0.60	6.85

NOSE AND THROAT

STATION	A/A*	ERODED DEPTH (IN.)	MATERIAL AFFECTED DEPTH (IN.)	EROSION RATE (MILS/SEC)
9	2.42	0.25	0.58	7.79
8	1.68	0.24	0.53	7.48
7	1.52	0.27	0.50	8.41
6	1.27	0.30	0.52	9.34
5	1.10	0.32	0.57	9.97
4	1.02	0.39	0.63	12.15
3	1.01	0.34	0.61	10.59
2	1.02	0.31	0.60	9.66
1	1.08	0.25	0.49	7.79

FORWARD EXIT CONE

STATION	A/A*	ERODED DEPTH (IN.)	MATERIAL AFFECTED DEPTH (IN.)	EROSION RATE (MILS/SEC)
2	1.10	0.25	0.45	7.79
3	1.29	0.22	0.43	6.85
4	1.44	0.18	0.42	5.61
5	1.67	0.14	0.40	4.36
6	1.90	0.12	0.39	3.74
7	2.14	0.08	0.37	2.49

AFT EXIT CONE

STATION	A/A*	ERODED DEPTH (IN.)	MATERIAL AFFECTED DEPTH (IN.)	EROSION RATE (MILS/SEC)
10	2.63	0.08	0.39	2.49
9	3.00	0.02	0.38	0.62
8	3.47	0.03	0.25	0.93
7	3.98	0.07	0.33	2.18
6	4.33	0	0.28	0
5	4.96	0	0.27	0
4	5.44	0	0.23	0
3	5.88	0	0.22	0
2	6.33	0	0.25	0
1	6.76	0	0.28	0

Figure 14. N-1 Nozzle Erosion and Char Data (270 Deg)

and 2 on the shell insulation were covered by the case insulation. Also some swelling and deliminations occurred in the region of Stations 3, 4, and 5. If the thick-ness of the eroded insulation was greater than the initial, a zero eroded depth was reported.

Table II presents average eroded depths, material affected depths, and erosion rates. These data should be used with comparable data to be generated on subsequent tests to evaluate the relative performance of candidate materials.

The sectioned nozzle part surfaces are shown in Figures 15 through 22 to illustrate the eroded surfaces, char lines, separations and delaminations. Figures 19 and 22 show one of the 2.800 in. deep thermocouple holes. Depth measurements perpendicular to the eroded flow surface down to the hole tip averaged 0.202 inch.

4.3 THERMOCOUPLE DATA

Four thermocouples, TN-1 through TN-4, were installed into the ablative liner in the forward section of the aft exit cone to monitor thermal response of the material as it is heated by the motor exhaust gas. Two thermocouples, TN-1 and TN-4, were installed in drilled holes 2.800 in. in depth with the tips lying 0.30 in. below the initial surface. The other two, TN-2 and TN-3, were located in holes drilled 2.400 in. in depth with the tips 0.50 in. below the surface. Figure 23 presents measured temperature response as a function of time.

Just prior to test, all thermocouples read 60°F. The initial temperature rise for the shallower thermocouples, TN-1 and TN-4, occurred at T + 7.4 sec and continued to rise throughout the test. Temperatures of 1,000°F (TN-4) and 920°F (TN-1) were recorded at 37.00 sec. TN-2 and TN-3, the deeper thermocouples, showed a gradual temperature rise over motor burn time. TN-3 recorded a temperature of 110°F at 37 sec and TN-2 recorded a temperature of 100°F.

The peak temperatures of TN-1 and TN-4 indicate these instruments were within the char depth of the material; char formation in phenolics is generally defined as occurring within a temperature band of 800° to 1,000°F. TN-2 and TN-3 were experiencing heating but were still below the charred region of the material.

TABLE II

N-1 NOZZLE, AVERAGE EROSION AND CHAR DATA

SHELL INSULATION

Station	A/A*	Eroded Depth (in.)	Material Affected Depth (in.)	Erosion Rate (mil/sec)
1	4.08	0	0	0
2	4.08	0	0	0
3	4.08	0	0.24	0
4	4.03	0	0.28	0
5	4.00	0.05	0.30	1.56
6	3.96	0.08	0.36	2.49
7	3.75	0.16	0.52	4.98
8	3.09	0.24	0.62	7.48

NOSE AND THROAT

Station	A/A*	Eroded Depth (in.)	Material Affected Depth (in.)	Erosion Rate (mil/sec)
9	2.42	0.26	0.60	8.10
8	1.68	0.26	0.54	8.10
7	1.52	0.24	0.49	7.48
6	1.29	0.29	0.50	9.03
5	1.10	0.30	0.56	9.34
4	1.02	0.34	0.60	10.59
3	1.01	0.32	0.60	9.97
2	1.02	0.30	0.58	9.34
1	1.08	0.24	0.48	7.48

FORWARD EXIT CONE

Station	A/A*	Eroded Depth (in.)	Material Affected Depth (in.)	Erosion Rate (mil/sec)
2	1.10	0.22	0.44	6.85
3	1.29	0.20	0.43	6.23
4	1.44	0.17	0.42	5.30
5	1.67	0.14	0.40	4.36
6	1.90	0.11	0.38	3.43
7	2.14	0.09	0.33	2.80

TABLE II (Cont)

AFT EXIT CONE

Station	A/A*	Eroded Depth (in.)	Material Affected Depth (in.)	Erosion Rate (mil/sec)
10	2.63	0.07	0.33	2.18
9	3.00	0.01	0.32	0.31
8	3.47	0.02	0.32	0.62
7	3.98	0.03	0.31	0.93
6	4.33	0	0.26	0
5	4.96	0	0.26	0
4	5.44	0	0.23	0
3	5.88	0	0.22	0
2	6.33	0	0.24	0
1	6.76	0	0.27	0

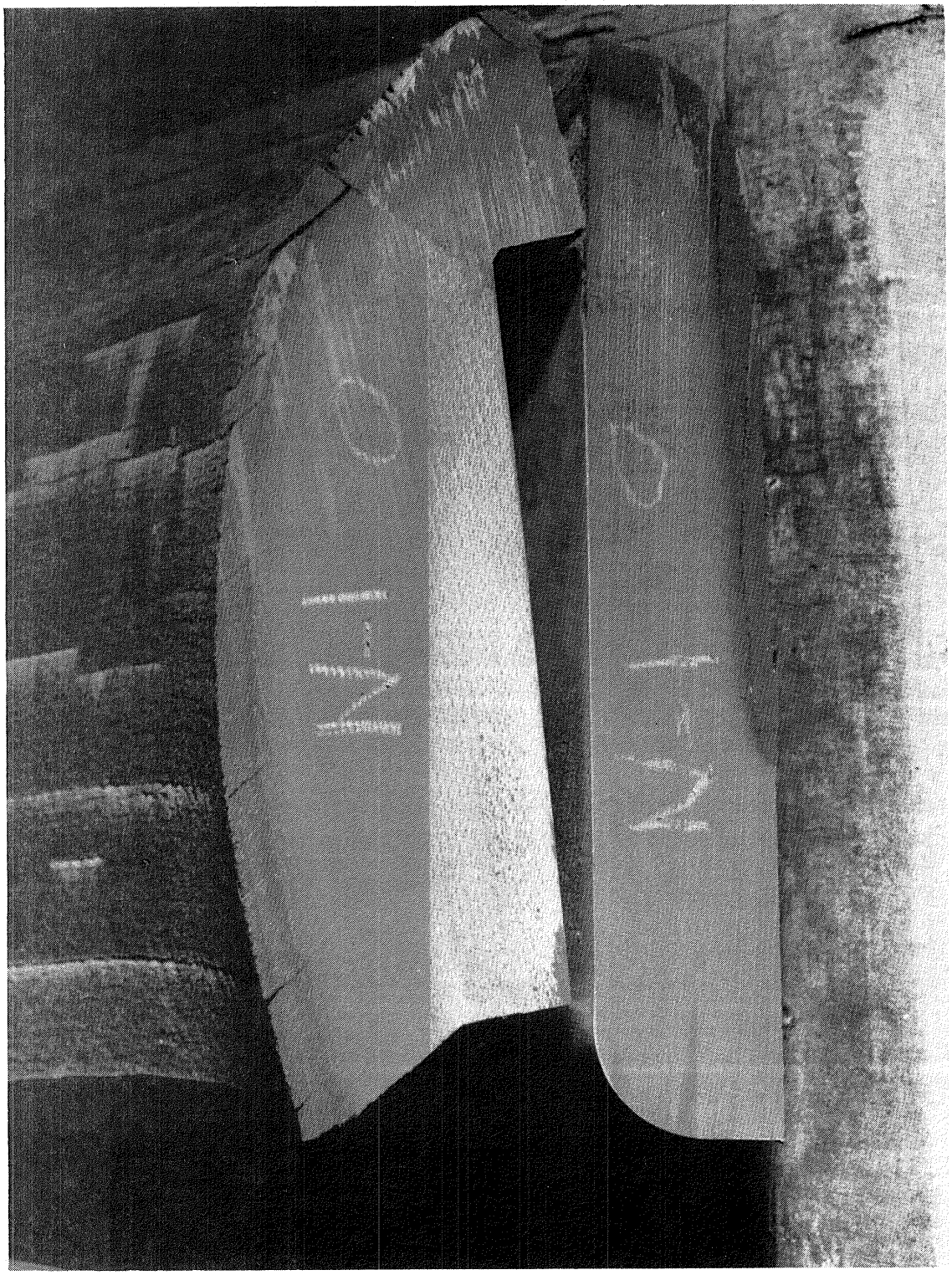

Figure 15. N-1 Nozzle Sectioned Nose, Throat, and OD Insulator (0 Deg)

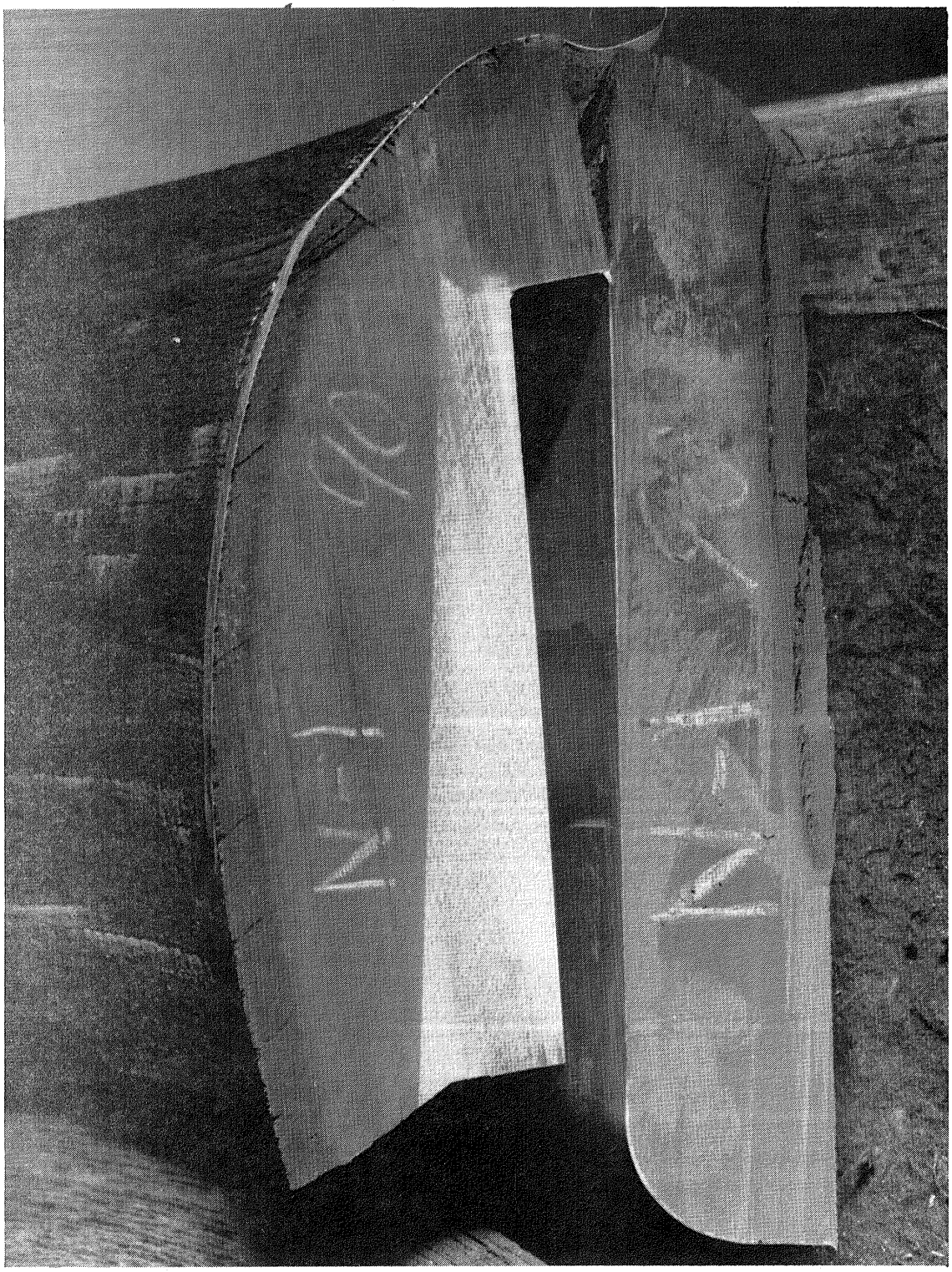

Figure 16. N-1 Nozzle Sectioned Nose, Throat, and OD Insulator (90 Deg)

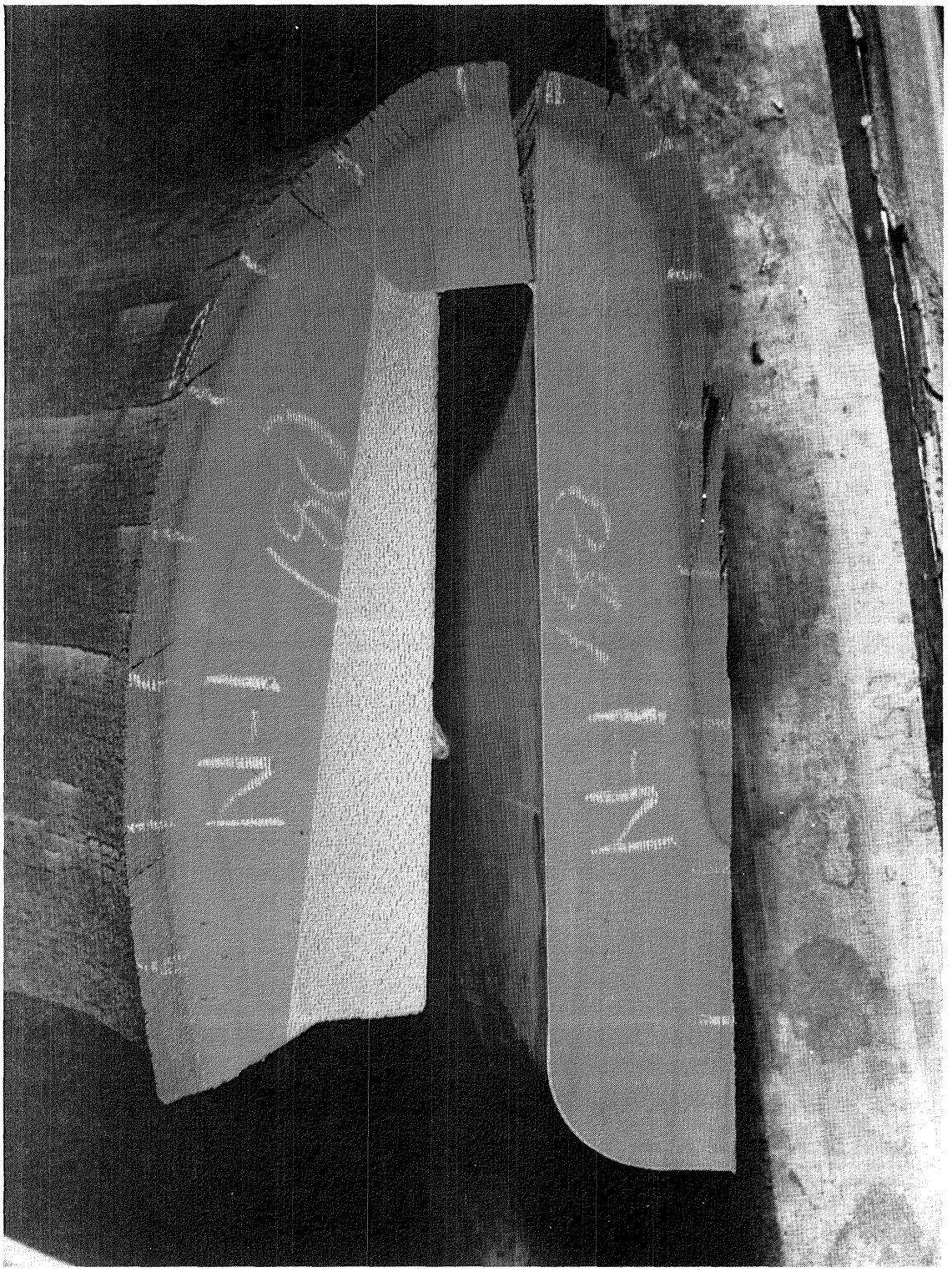

Figure 17. N-1 Nozzle Sectioned Nose, Throat and OD Insulator (180 Deg)

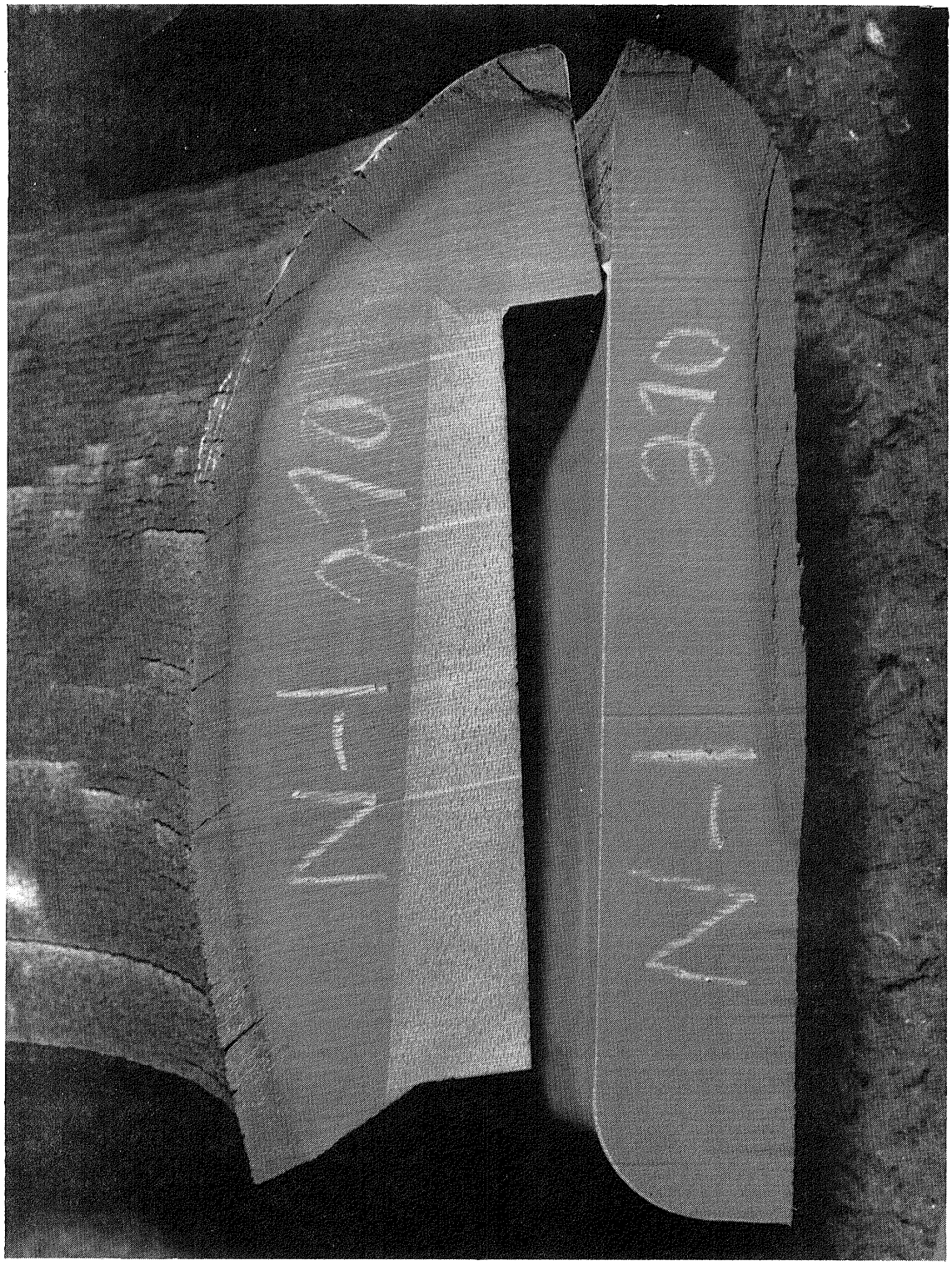

Figure 18. N-1 Nozzle Sectioned Nose, Throat, and OD Insulator (270 Deg)

Figure 19. Overall View Aft Exit Cone Sections

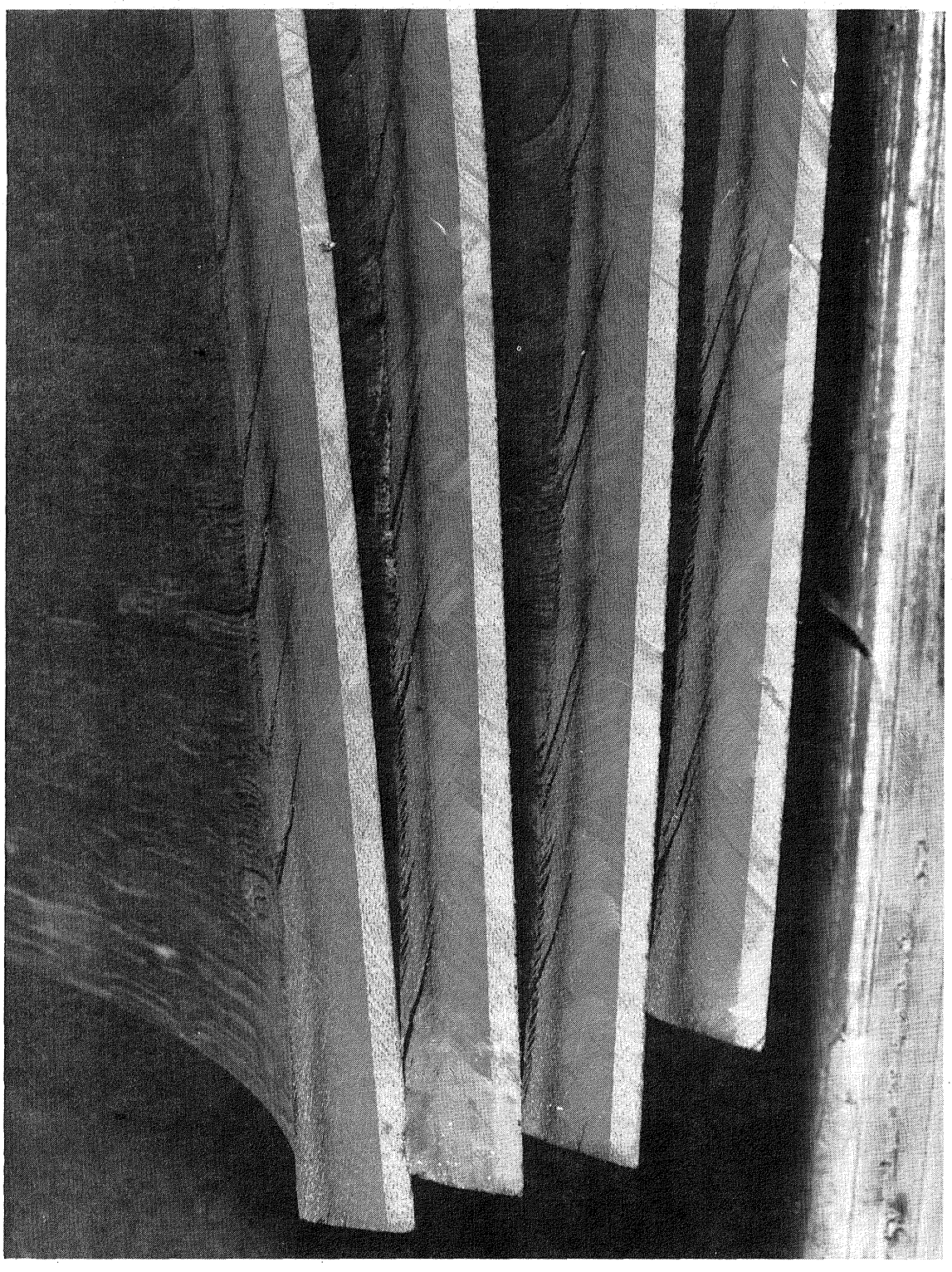

Figure 20. Closeup View Sectioned Cone (Aft End)

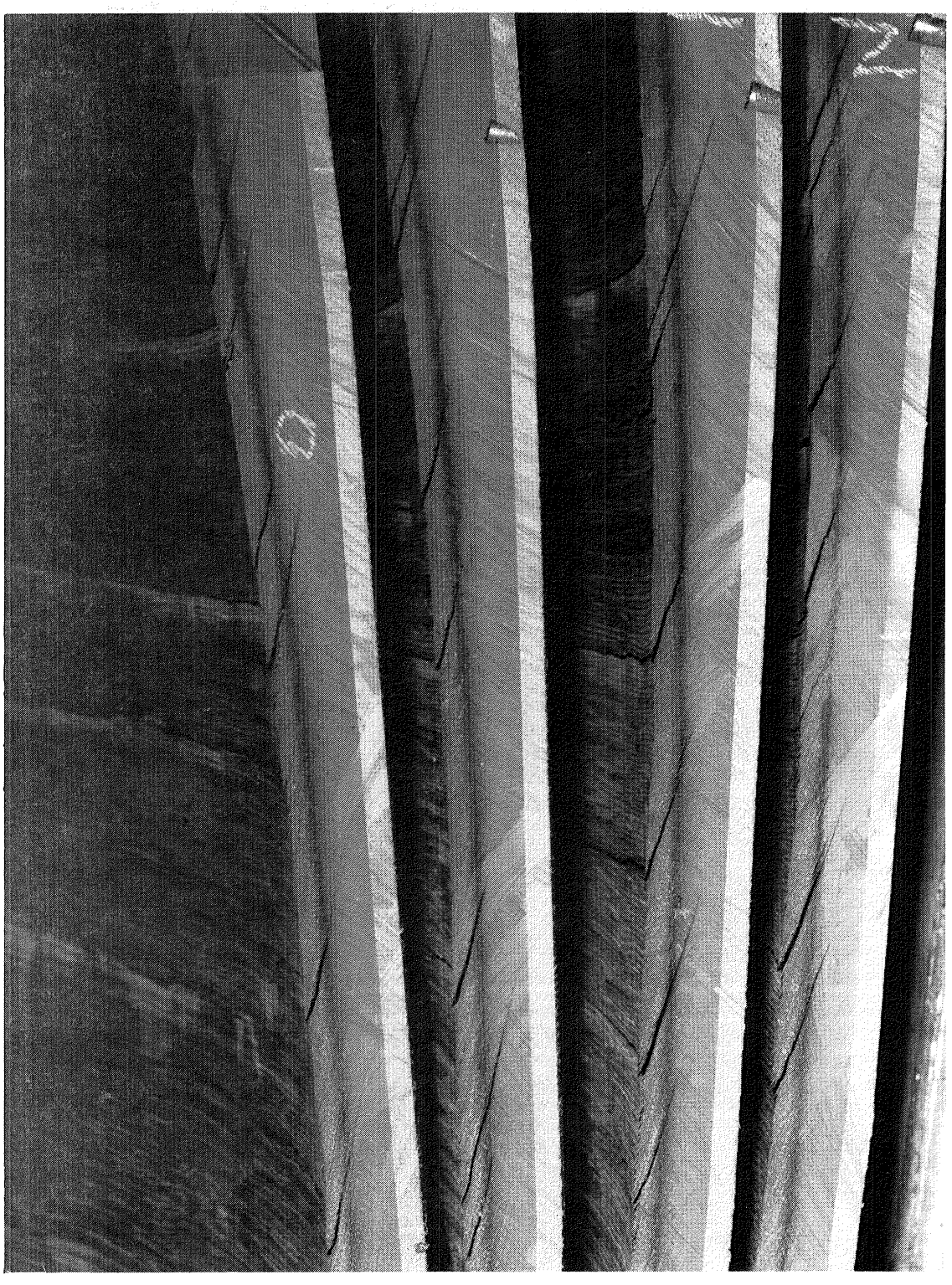

Figure 21. Closeup View Sectioned Cone Center Section

Figure 22. Closeup View Sectioned Cone Forward End

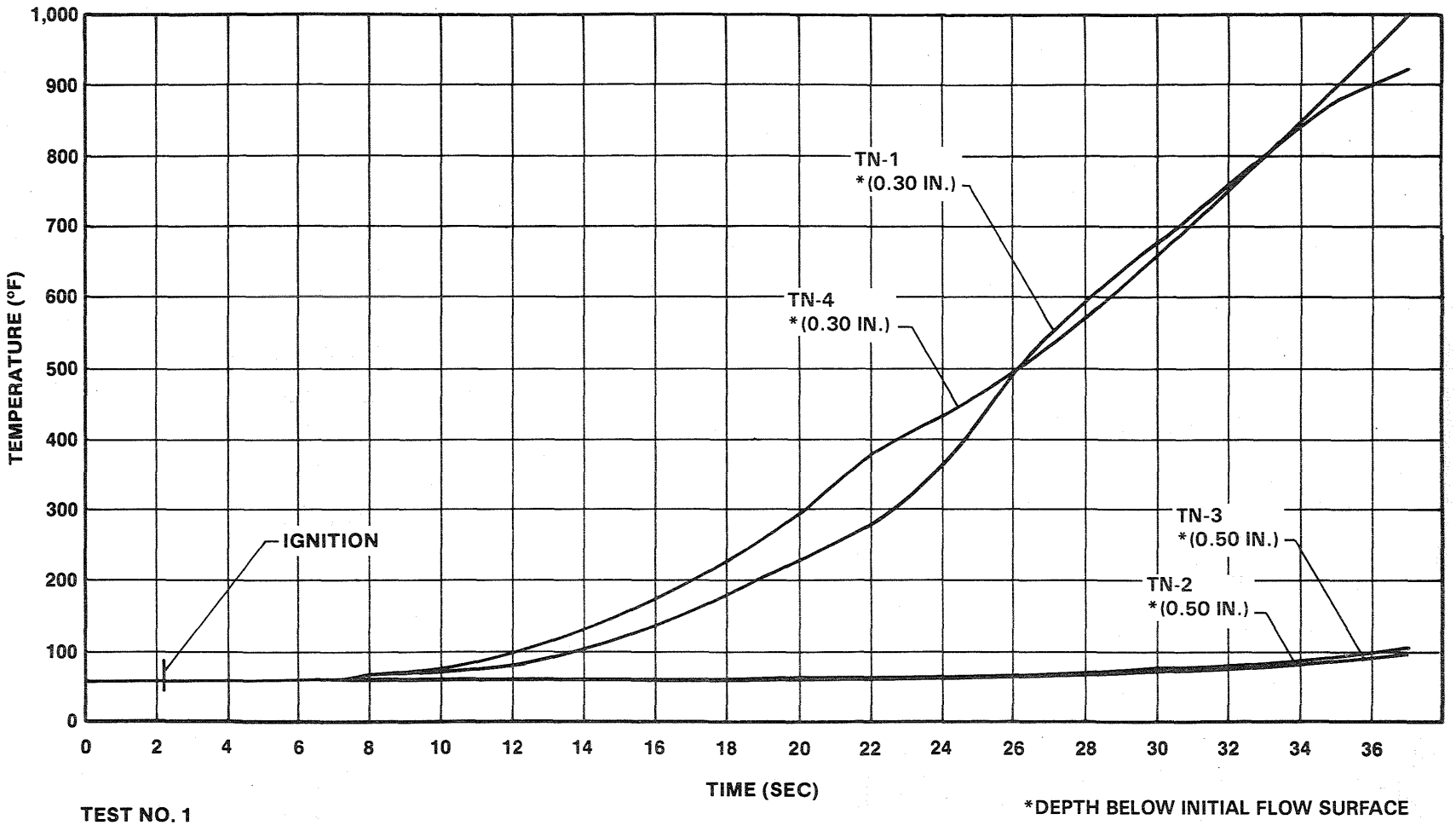

Figure 23. N-1 Nozzle Temperature Versus Time

5.0 DATA SUMMARY AND DATA ANALYSIS

A comparison of the N-1 nozzle and SRM nozzle erosion rates is presented in Table III. These data indicate how the N-1 nozzle simulated the full-scale SRM environments. The N-1 nozzle average web pressure of 637.8 psi was in close agreement with the average SRM pressure of 648.9 psi. As shown in Table III, significantly higher erosion rates are experienced at the nose tip of the SRM nozzle. Typical SRM rates range form 14 to 16 mil/sec as compared to 7.48 mil/sec for the N-1 nozzle. This was expected since flow velocities at the tip of the SRM nozzle are significantly higher than those experienced in the N-1 nozzle. Inlet and throat erosion rates measured on the N-1 nozzle are in close agreement with comparable values for the SRM nozzle.

Exit cone erosion rates measured in the N-1 nozzle are higher in the forward cone and lower in the aft cone than those experienced in the SRM nozzle.

Comparison of the char data between the SRM and N-1 nozzles is not easily made due to the differences in motor burn time. The thermal analysis technique used in predicting the N-1 performance. This will be done after each test so that an accurate prediction technique for each material is obtained and can be used for redesign in predicting SRM nozzle performance.

Table IV presents design thicknesses determined from the N-1 nozzle to meet SRM ablative material safety factor, i.e., 2 x erosion plus 1.25 char except at the aft exit cone where the requirement is 1.5 x erosion plus 1.00 char. Also shown is the product of thickness and material density, a relative weight factor. The total thickness required and the product of density and thickness are parameters which will be used to evaluate the relative performance of new materials to be tested in subsequent nozzles.

TABLE III

COMPARISON OF SRM AND N-1 NOZZLE EROSION RATES

Location	A/A*	Average Erosion Rate (mil/sec) SRM	N-1
Nose Tip	N/A	14.0 to 16.00	7.48
Inlet	1.46	8.8 to 9.20	9.03
Throat	1.00	8.8 to 10.50[1]	10.18[1]
Exit Cone Fwd	1.20	2.45 to 3.00	6.39
	2.00	1.7 to 2.08	3.12
Exit Cone Aft	2.80	2.0 to 2.20	1.25
	5.40	1.5 to 1.64	0
	6.70	1.5 to 2.06	0

[1] Based on pre/post-test diametrical measurements

TABLE IV

N-1 SUBSCALE DESIGN THICKNESS REQUIRED TO MEET SRM SAFETY FACTORS
(IN.)

Location	Area Ratio	Eroded Depth	Char Thickness	Thickness Required With Safety Factors: Erosion	Thickness Required With Safety Factors: Char	Total	(lb/in.^{3})	T
Nose Tip	N/A	0.240	0.385	0.480	0.481	0.961	0.0534	0.0513
Inlet	1.46	0.270	0.330	0.540	0.412	0.952	0.0530	0.0508
Throat	1.0	0.321	0.279	0.642	0.349	0.990	0.0530	0.0528
Forward Exit Cone	1.2	0.205	0.234	0.410	0.293	0.703	0.0527	0.0370
	2.0	0.114	0.256	0.228	0.320	0.548	0.0520	0.0288
Aft Exit Cone	2.8	0.040	0.285	0.080	0.356	0.440	0.0530	0.0230
	5.4	0	0.230	0	0.290	0.290	0.0530	0.0150
	6.7	0	0.277	0	0.277	0.270	0.0530	0.0140

6.0 CONCLUSIONS AND RECOMMENDATIONS

The baseline nozzle was in good condition and performed well throughout static firing. Although data measured in subscale tests cannot be used directly to design the full-scale SRM nozzle, it does provide a means of selecting the best candidate materials and provides data which can be used in analytical models to design the full-scale SRM nozzle.

The preferred method for evaluating which candidate materials will perform best in the SRM nozzle is to use the subscale erosion and char data along with SRM design safety factors to calculate insulation thicknesses required for the full-scale design. This thickness multiplied by density will provide a relative weight factor. Cost can then be evaluated on the basis of the raw material cost per pound. Materials which have potential for use in the SRM nozzle should have a thickness and/or density-thickness product which is equal to or less than those determined for the baseline material.

It is recommended that evaluation proceed as planned for the N-2 and N-3 test nozzles so that final selection of the best performing materials can be made and incorporated into the N-4 nozzle design.

This Page Intentionally Left Blank

APPENDIX B

TEST NUMBER 2 STATIC TEST AND ANALYSIS REPORT

This Page Intentionally Left Blank

TWR-13871
REV A

Space Shuttle Alternate Nozzle Materials Program Static Test Report Test No. 2

1 November 1984

DR No. 5-3

Prepared for:

National Aeronautics and Space Administration
George C. Marshall Space Flight Center
Marshall Space Flight Center, Alabama 35812

Contract NAS8-30490

WBS 1.4.2.3.10

MORTON THIOKOL, INC.
Wasatch Division
P.O. Box 524, Brigham City, Utah 84302 (801) 863-3511

Publications No. 85295

This Page Intentionally Left Blank

MORTON THIOKOL, INC.
Wasatch Division

SPACE SHUTTLE
ALTERNATE MATERIALS PROGRAM
STATIC TEST REPORT
TEST NO. 2

1 November 1984

Prepared by:

A. R. Canfield, Manager
Nozzles and Controls Department

Concurred by:

E. E. Anderson
Nozzle Design Section

G. E. Nichols
SRM Nozzle Program

CONTENTS

		Page
1.0	INTRODUCTION AND SUMMARY	1
2.0	TEST OBJECTIVE	2
3.0	DESIGN DESCRIPTION	3
4.0	POST-TEST DATA SUMMARY AND PERFORMANCE EVALUATION	12
4.1	Nozzle Post-Test Condition	12
4.2	Post-Test Erosion and Char Measurements	12
4.3	Thermocouple Data	20
5.0	DATA SUMMARY AND ANALYSIS	24
6.0	CONCLUSIONS AND RECOMMENDATIONS	29

ILLUSTRATIONS

Figure		Page
1	Subscale Space Shuttle Nozzle Description	4
2	N-2 Nozzle Materials and Thermocouple Locations	5
3	N-2 Nozzle Structural Analysis	8
4	N-2 Nozzle Predicted Erosion and Char Thickness and Backside Temperatures	9
5	N-2 Nozzle Nose and Throat Section	10
6	N-2 Nozzle Exit Cone Section	11
7	N-2 Nozzle Nose, Throat, and Shell Insulator	13
8	N-2 Nozzle Nose and Throat, Spalled Area	14
9	N-2 Nozzle Exit Cone	15
10	N-2 Nozzle Forward Exit Cone	16
11	N-2 Nozzle Forward and Aft Exit Cone	17
12	Test Motor Assembly	18
13	Test No. 2 Pressure Time Trace	19
14	N-2 Nozzle Typical Erosion and Char Profile	21
15	Average Erosion and Char Data, N-2 Nozzle	22
16	N-2 Nozzle Thermocouple Data	23
17	Erosion Rate vs Area Ratio Based on Nozzle Cross Sections	25
18	Char Depth vs Area Ratio Based on Nozzle Cross Sections	26
19	Required Thickness Comparisons	27
20	Thickness-Density Comparisons	28

TABLES

Table		Page
I	Subscale Space Shuttle Nozzle Average Tag End Test Results (N-2 Nozzle)	7

1.0 INTRODUCTION AND SUMMARY

The N-2 nozzle was tested 2 February 1983 and was the second of four in the subscale alternate materials evaluation series. The design closely simulated the configuration and flow profiles of the full-scale SRM nozzle.

The N-2 nozzle was the first nozzle using alternate materials for evaluation. Polyacrylonitrile (PAN) based materials were used throughout the nozzle except for the throat insulation and exit cone overwrap which used ceramic and glass materials, respectively.

Overall performance of the N-2 nozzle was good. Erosion was generally smooth and uniform except for the nose ring which experienced some uneven erosion and a large eroded pocket at the 270-deg location. Erosion was generally less than the baseline (rayon) nozzle, and char depths were greater except for the aft exit cone which charred about the same as the baseline. The K411 spun PAN performed very well and exhibited excellent structural integrity. A description of the N-2 nozzle and a discussion of the test data, analysis, and material performance are presented in subsequent sections.

2.0 TEST OBJECTIVE

The test objective was to obtain performance characteristics of PAN materials and ceramic mat phenolic and compare performance to that of the baseline materials.

3.0 DESIGN DESCRIPTION

The nozzle is a fixed, partially submerged design consisting of a steel shell, shell insulator, nose ring, throat ring, and exit cone section. Overall geometry and contour simulate those of the full-scale SRM nozzle. The N-2 nozzle is shown in Figure 1.

Figure 2 presents the materials used in the N-2 nozzle. All of the ablative materials were PAN-based materials and the throat insulation was a ceramic mat phenolic. The throat, nose, and shell insulator were hydroclave cured while the exit cone and throat insulator were autoclave cured. The material specifics are:

Shell Insulator - Fiberite MX4961A. This material use E/XA-S 6K continuous PAN fiber from Courtaulds Limited with a 99 percent carbon yield and a fiber modulus of 34 million. The fiber was woven into a five-harness fabric and preimpregnated with a phenolic resin with no filler.

Nose - U.S. Polymeric FM5879. This material uses a Hi-Tex-3K continuous PAN fiber from Hitco. This material has a 99 percent carbon yield, a 33-million modulus, and was woven into an eight-harness fabric. A phenolic resin with 15 percent carbon filler was used in preimpregnated the material.

Throat - Fiberite K411. The K411 uses a Panex SWB-8 spun PAN fiber from Stackpole Fibers Company. The spun fibers are woven into a balanced eight-harness satin weave and thermally treated to provide a 99 percent carbon yield and a 38-million modulus. A phenolic resin was used for prepreging with 5 to 15 percent carbon powder filler.

Forward Exit Cone - Fiberite MX4961. Union Carbide's T300 continuous 3K PAN fiber was used in this product. The T300 has a 92 percent carbon yield, a 33-million modulus, and was woven into an eight-harness fabric. A non-filled phenolic resin was used.

Aft Exit Cone - Fiberite MX4961B. This material is the same as the forward exit cone except that it used Union Carbide's T300-6K continuous PAN. The phenolic resin was also unfilled.

Exit Cone Overwrap - U.S. Polymeric FM5755. This is a heavyweight E-glass, eight-harness satin phenolic with up to 6 percent silica powder filler.

Throat Insulation - Fiberite MXR520. This is a ceramic fiber mat non-filled phenolic with a high resin content (50 to 60 percent).

83531-18A

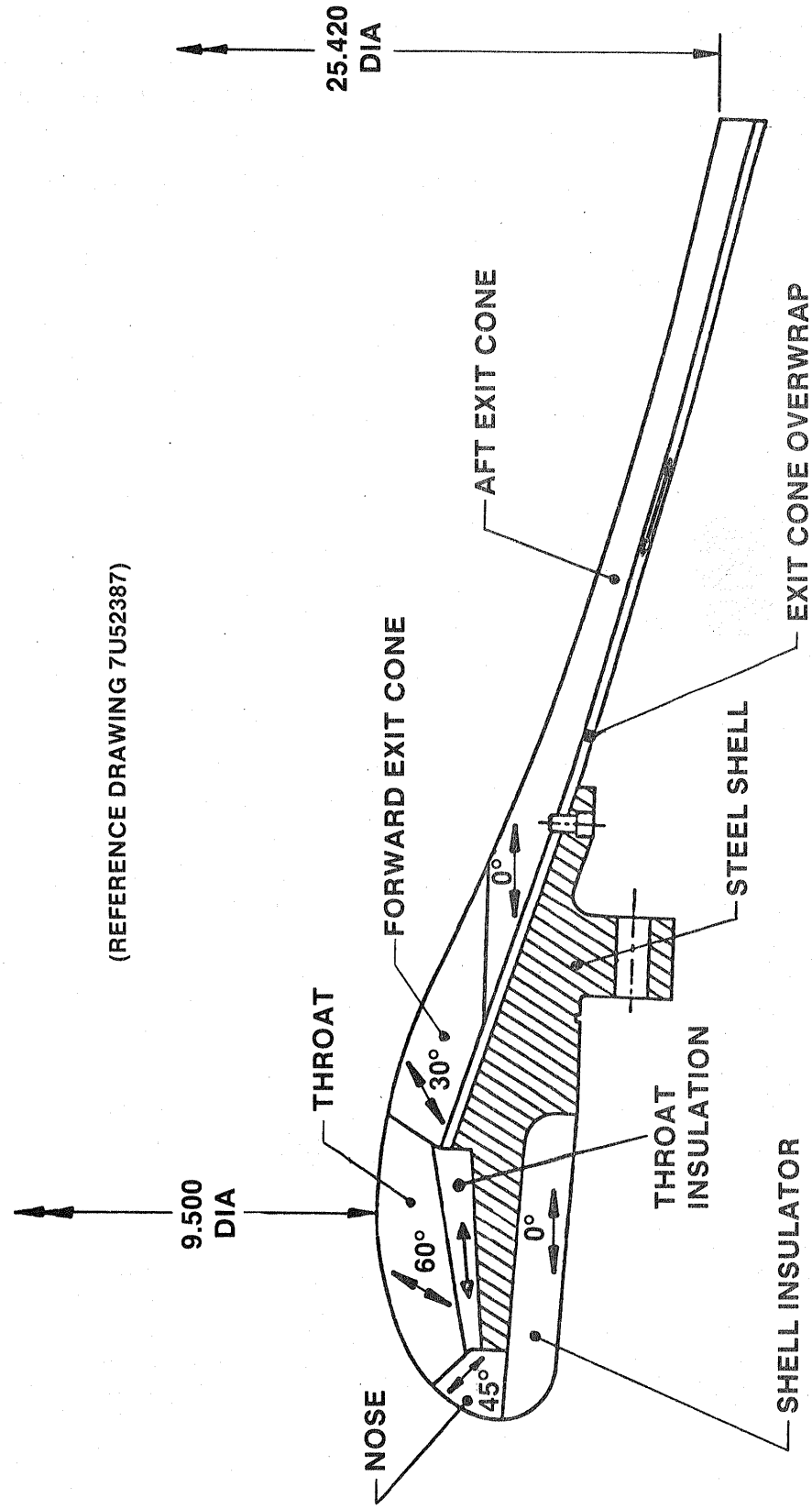

Figure 1. Subscale Space Shuttle Nozzle Description

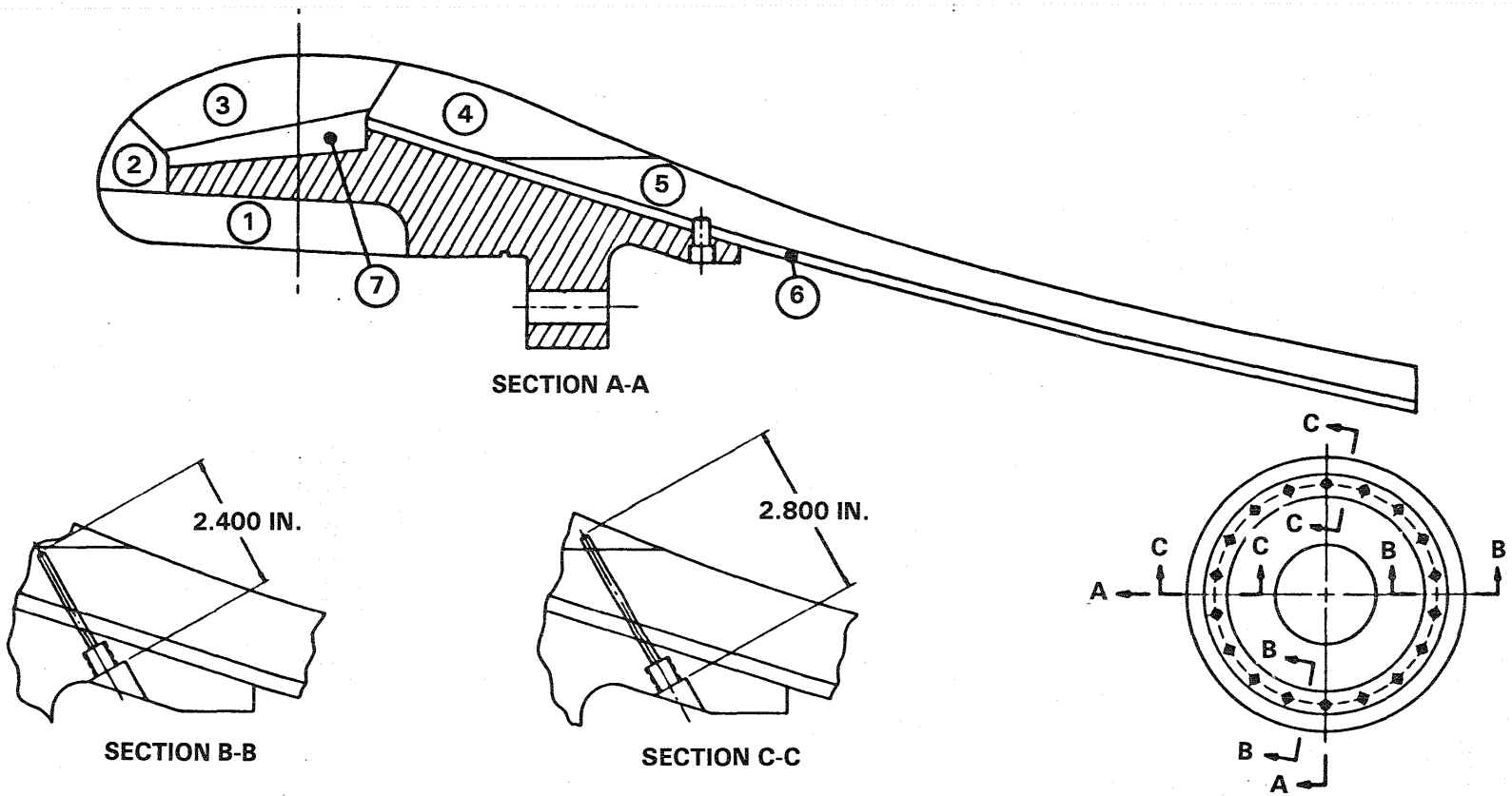

	MATERIAL						
	1	2	3	4	5	6	7
NOZZLE NO. 2	MX4961A C-PAN COURT-6K	FM5879 C-PAN HITCO-3K	K411 SPUN PAN STACKPOLE	MX4961 C-PAN T300-3K	MX4961B C-PAN T300-6K	FM5755 GLASS	MXR520 CERAMIC PAPER

Figure 2. N-2 Nozzle Materials and Thermocouple Locations

85295-1B

Specimens were taken from each ablative and insulative component and tested for residual volatiles, resin content, specific gravity, and compressive strength. The results presented in Table I are the average results from three tests.

Figure 2 also shows the thermocouple locations. Two thermocouple probes were located in the exit cone--one at a nominal depth of 0.300 in. from the initial flow surface and one at 0.200 inch. Two thermocouples were located at a depth of 0.500 inch.

Figure 3 presents the results of the 1-D structural analyses of the N-2 nozzle. All components show positive margins of safety using a 1.40 factor of safety.

Figure 4 presents predicted erosion and material affected depth at selected locations. The maximum predicted backside temperature is 200°F and occurs in the aft exit cone region.

The prefire throat diameter was 9.504 in. and finished nozzle weight was 533.5 lb. Figures 5 and 6 present prefire photographs of the nozzle.

TABLE I

SUBSCALE SPACE SHUTTLE NOZZLE
AVERAGE TAG END TEST RESULTS
(N-2 NOZZLE)

	Residual Volatiles	Resin Content (%)	Specific Gravity (G/cc)	Compressive Strength (psi)
Forward Exit Cone				
PAN Phenolic	2.37	32.89	1.53	19,865
Aft Exit Cone				
PAN Phenolic	2.21	34.50	1.50	15,344
Exit Cone Overwrap				
Glass Phenolic	1.61	30.11	1.93	19,823
Throat				
PAN Phenolic	2.23	34.28	1.50	18,761
Throat Insulation				
Ceramic Mat Phenolic	0.57	54.97	0.93	7,396
Nose				
PAN Phenolic	1.98	32.41	1.51	54,736
Shell Insulator				
PAN Phenolic	1.65	27.81	1.53	57,022

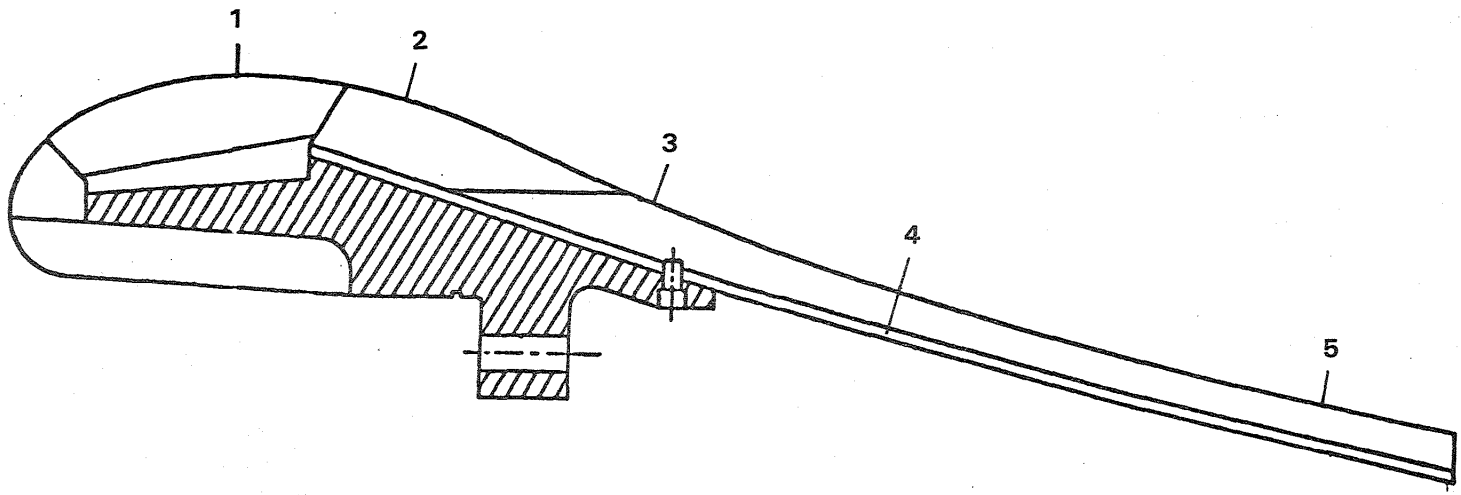

ANALYSIS POINT**	MATERIAL	STRESS TYPE	STRESS	ALLOWABLE STRESS	MS*
1	SPUN PAN	WITH PLY	-1,156	-12,700	6.84
2	CONTINUOUS PAN	WITH PLY	2,900	9,700	1.38
3	CONTINUOUS PAN	WITH PLY	1,627	10,200	3.47
4	GLASS CLOTH	WITH PLY	-4,710	-13,000	0.97
5	CONTINUOUS PAN	WITH PLY	2,653	10,000	1.69

$$*MS = \frac{\text{ALLOWABLE STRESS}}{1.4 \times \text{STRESS}} - 1 \text{ WHERE FACTOR OF SAFETY} = 1.4$$

**ALL ANALYSES WERE CONDUCTED AT SEC INTO THE BURN AND MEOP ¾ 830 PSIA

Figure 3. N-2 Nozzle Structural Analysis

85295-1A

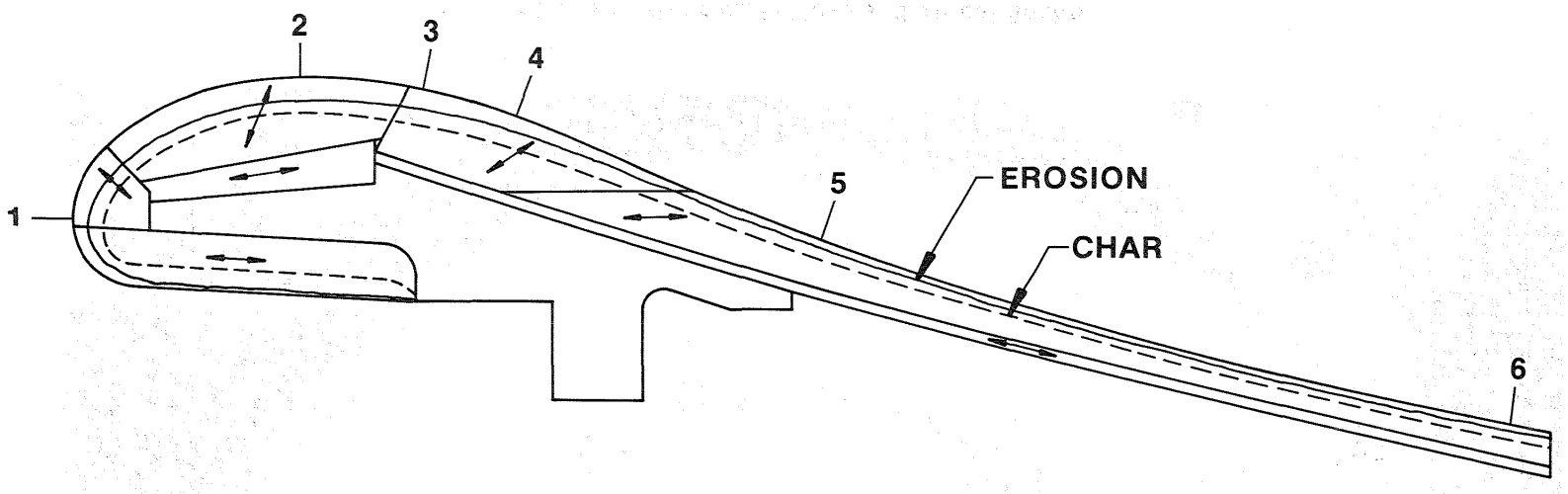

STATION	EXPANSION RATIO (A/A*)	THICKNESS (~ IN.)	EROSION[2] DEPTH (~ IN.)	EROSION RATE (MILS/SEC)	MATERIAL[1] AFFECTED DEPTH (~ IN.)	MATERIAL AFFECTED RATE (~ MIL/SEC)	LINER BACKFACE TEMPERATURE (~ °F)
1	-2.84	1.75	0.23	7.2	0.73	22.8	76
2	1.00	1.75	0.29	9.1	0.85	26.6	70
3*	1.14	1.62	0.19	5.9	0.73	22.8	70
4	1.48	1.62	0.16	5.0	0.62	19.4	70
5*	3.11	1.06	0.06	1.9	0.35	10.9	70
6	7.05	0.70	0.13	4.1	0.22	6.9	200

*INTERPOLATED

(1) BASED UPON THE FOLLOWING EQUATION: $\rho_{ce} = \rho_c + R_c(\rho_e - \rho_c)$ WHERE ρ_{ce} = DENSITY OF MATERIAL AT EDGE OF CHAR
MATERIAL AFFECTED DEPTH
ρ_c = DENSITY OF FULLY CHARRED MATERIAL
ρ_p = DENSITY OF VIRGIN MATERIAL
R_c = CHAR EDGE FACTOR = 0.27

(2) BASED UPON 0.84 X N-1 NOZZLE (32 SEC)

Figure 4. N-2 Nozzle Predicted Erosion and Char Thickness and Backside Temperatures

83531-18D

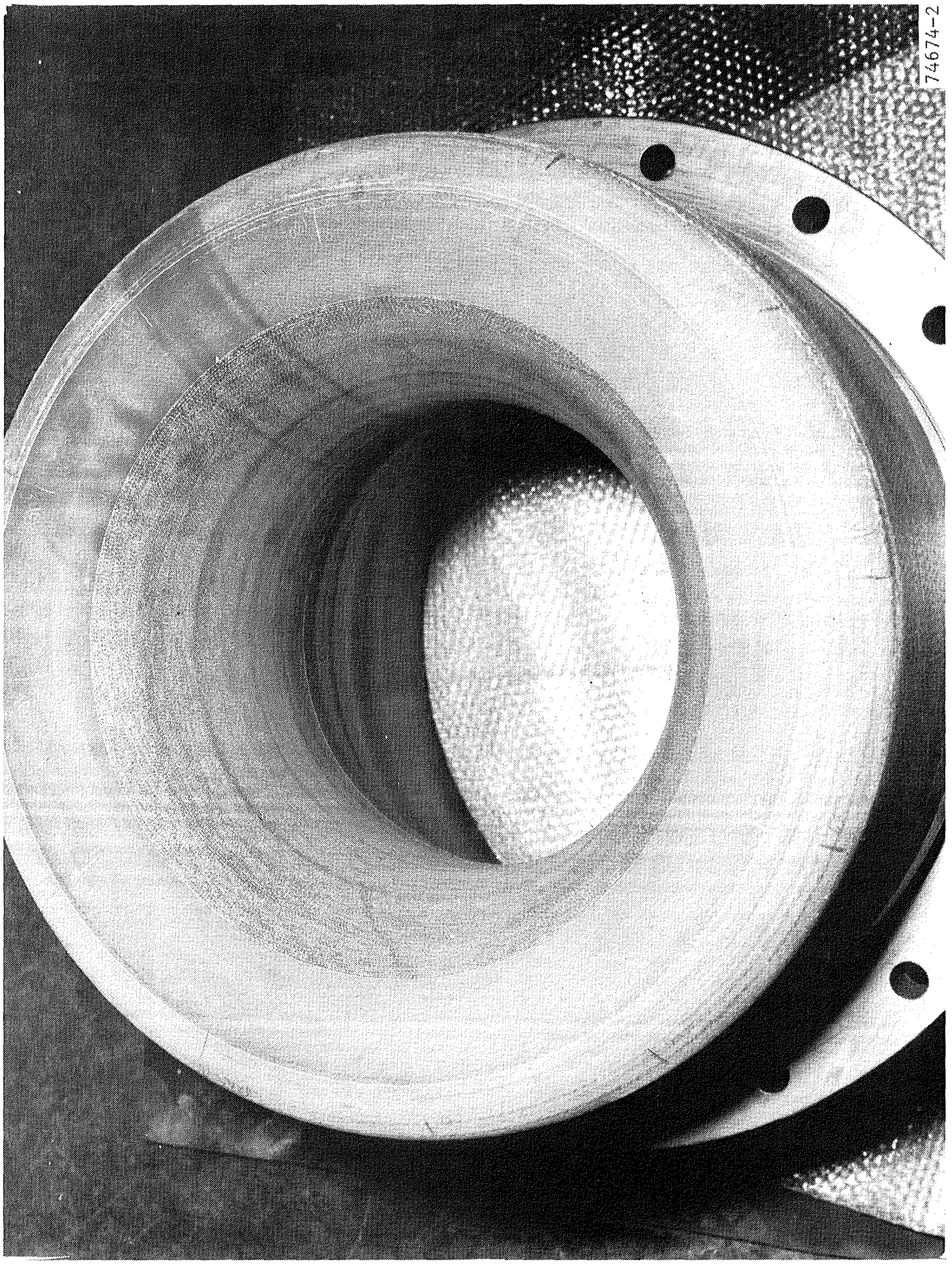

Figure 5. N-2 Nozzle Nose and Throat Section

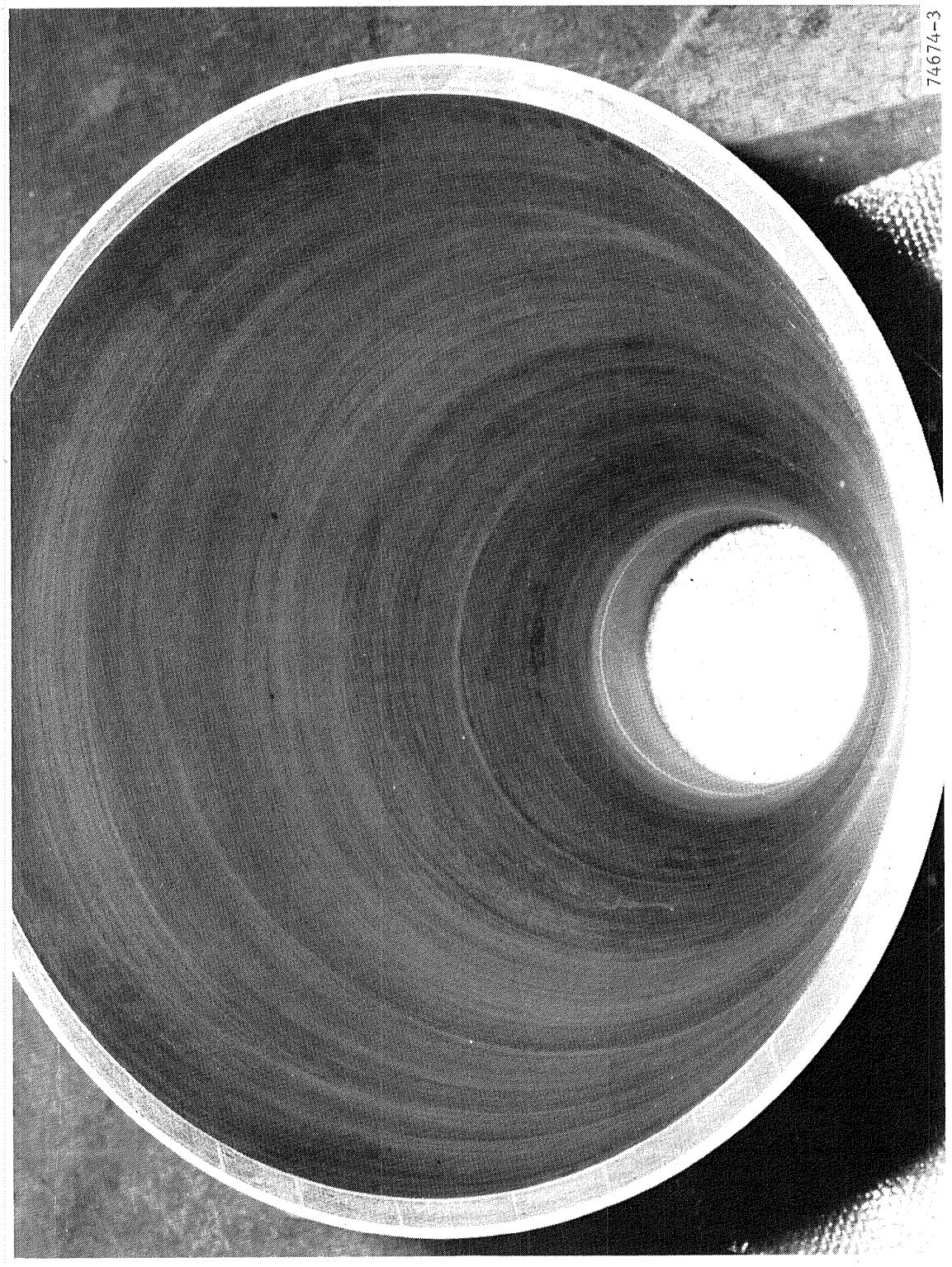

Figure 6. N-2 Nozzle Exit Cone Section

4.0 POST-TEST DATA SUMMARY AND PERFORMANCE EVALUATION

4.1 NOZZLE POST-TEST CONDITION

The nozzle was in generally good condition but showed more apparent separation, swelling, and curl up of the material in the aft, parallel to centerline, wrap in the cone aft section and shell insulator.

The throat was quite smooth and uniform and showed very little or no swelling or ply separations. Measured erosion was less than on the N-1 baseline nozzle throat, but char appeared to be somewhat greater. The nose ring toward its aft end showed some light, uneven washing randomly about the circumference and a deep pocketing at the 270 deg location.

The aft cone charred, separated, and curled up material was quite soft and low in strength and showed several circumferential bands where apparent spalling had occurred. The ceramic mat throat insulator was not heat affected (charred); but, during metal shell refurbishment, it fractured across the plies near the center of the part, indicating low strength of the material.

The glass cloth insulation/structure overwrap on the exit cone liner was intact and completely unaffected by either internal or external environments.

The metal housing showed no indication of damage but was somewhat discolored by heating for plastic parts removal. The post-test condition of the plastics is shown in Figures 7 through 11.

Figure 12 shows the JPL test motor, and Figure 13 presents the pressure-time trace for the N-2 motor. The average web burn pressure was 649 psi and the web burn time was 31.53 sec.

4.2 POST-TEST EROSION AND CHAR MEASUREMENTS

Erosion rates were calculated using average web burn time. Measured throat erosion rates were calculated using 1/2 of the average difference of six prefire and postfire diametrical throat measurements. Erosion at other locations was recorded using measurements taken from the cross-sectioned nozzle. Char thickness was obtained by direct measurement taken on the sectioned nozzle components.

Figure 7. N-2 Nozzle Nose, Throat, and Shell Insulator

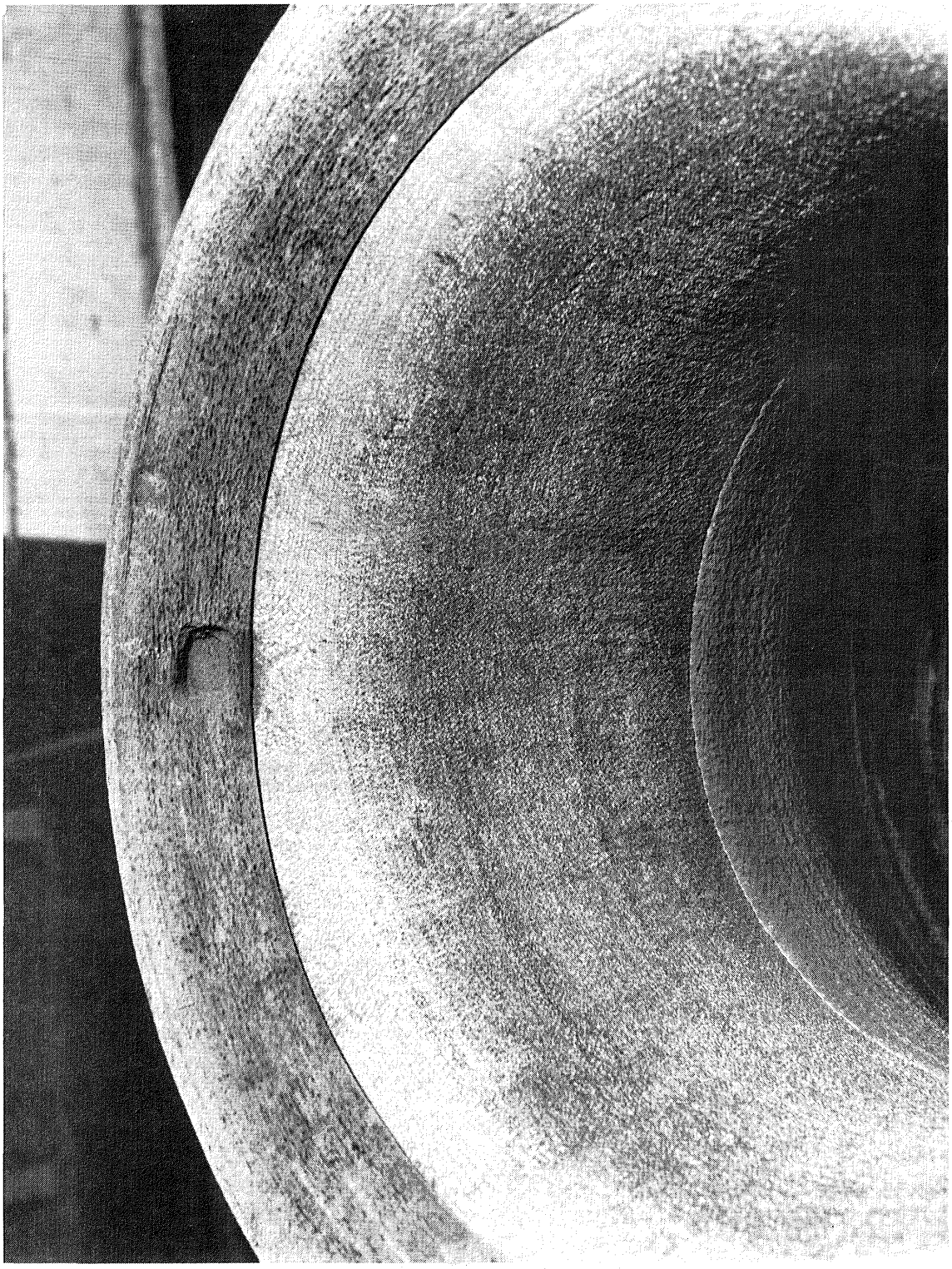

Figure 8. N-2 Nozzle Nose and Throat. Spalled Area

Figure 9. N-2 Nozzle Exit Cone

Figure 10. N-2 Nozzle Forward Exit Cone

Figure 11. N-2 Nozzle Forward and Aft Exit Cone

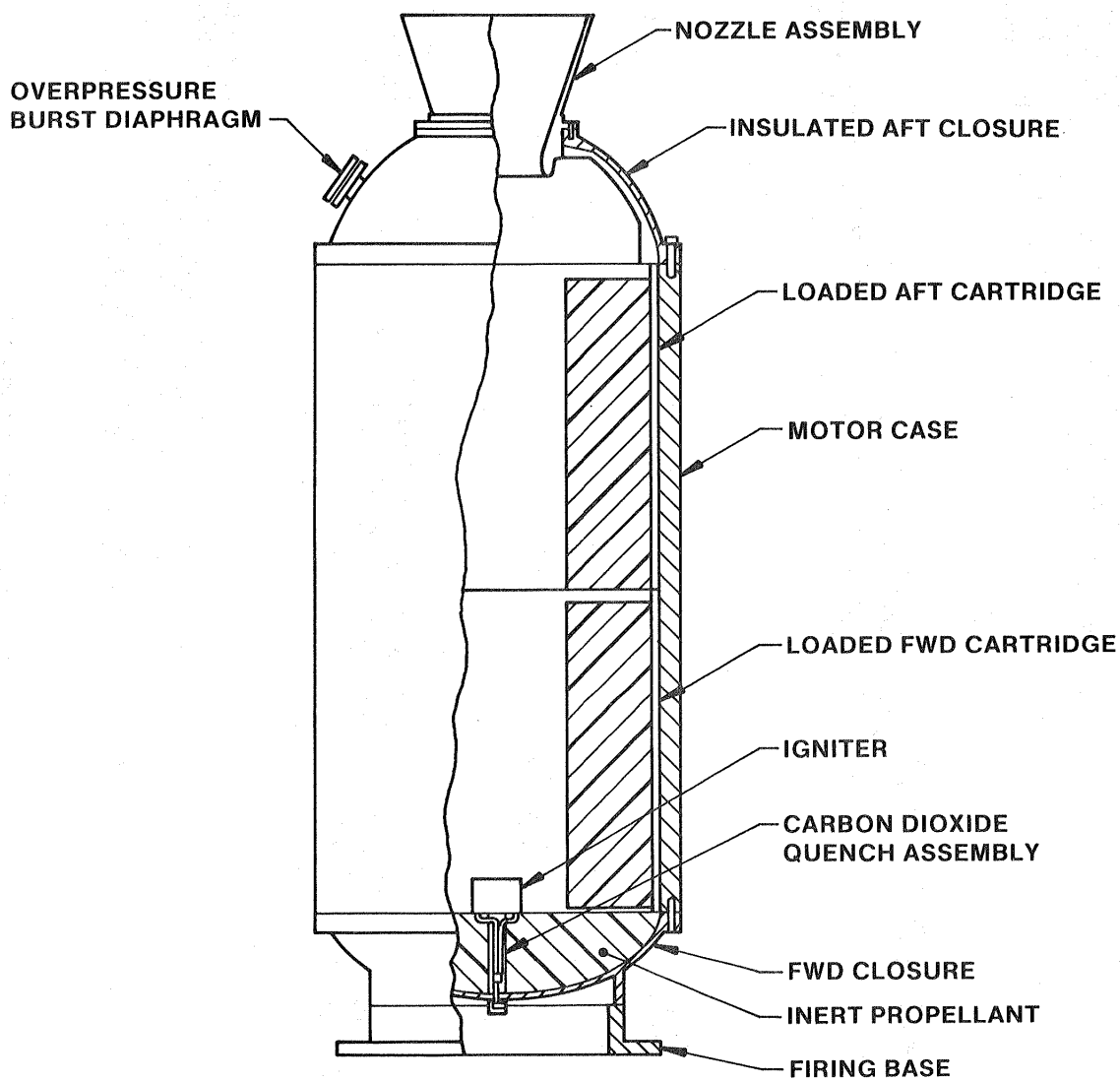

Figure 12. Test Motor Assembly

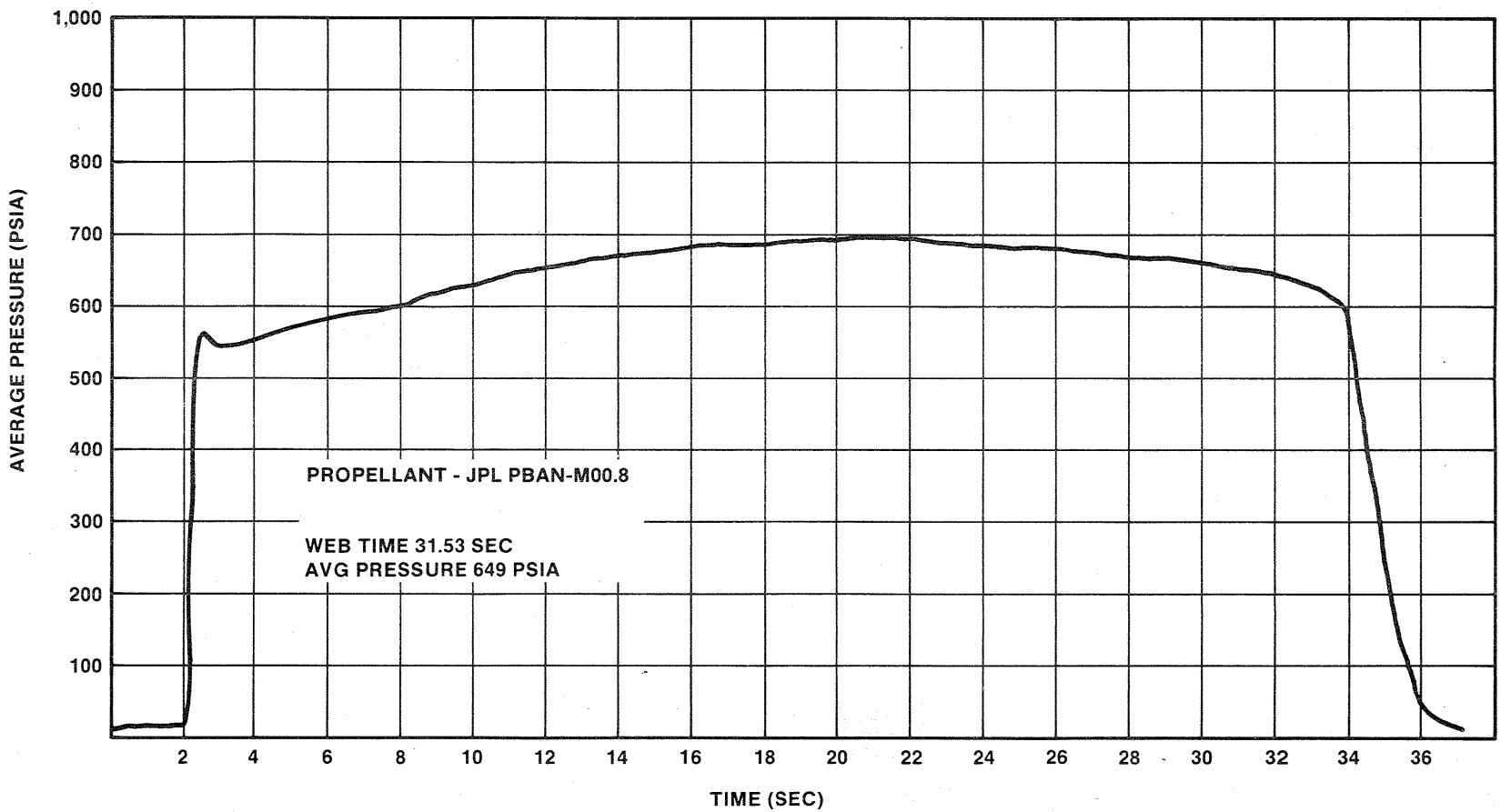

Figure 13. Test No. 2 Pressure-Time Trace

83531-18F

The average prefire nozzle throat was 9.504 in.; the average postfire throat diameter was 10.063 inches. The average throat erosion rate based on an average web time of 31.53 sec and the postfire diametrical measurement is 8.88 mils/sec. A typical erosion and char profile is shown in Figure 14; Figure 15 presents the average measured eroded depths, material affected depths, and calculated erosion rates as a function of initial area ratio. The material affected depth is the perpendicular distance from the initial uneroded surface to the char line. Stations 0, 1, and 2 on the shell insulator were covered by the case insulation.

4.3 THERMOCOUPLE DATA

Four thermocouples, TN-1 through TN-4, were installed into the ablative liner in the forward section of the aft exit cone to monitor thermal response of the materials as they were heated by the motor exhaust gas. TN-1 and TN-4 were installed in drilled holes 0.20 and 0.30 in. below the initial surface. The other two, TN-2 and TN-3, were located 0.50 in. below the surface. Figure 16 presents measured temperature response as a function of time.

Just prior to testing, all thermocouples read 40°F. The initial temperature rise for the shallower thermocouples, TN-1 and TN-4, occurred at T + 4 and T + 6 sec and continued to rise throughout the test. Temperatures of 2,590°F (TN-1) and 2,270°F (TN-4) were recorded at 36 sec. TN-2 and TN-3, the deeper thermocouples, showed a gradual temperature rise over motor burn time. TN-3 recorded a temperature of 205°F at 36 sec, and TN-2 recorded a temperature of 260°F.

The peak temperatures of TN-1 and TN-4 indicate these instruments were within the char depth of the material; char formation in phenolic is generally defined as occurring within a temperature band of 800° to 1,000°F. TN-2 and TN-3 were experiencing heating but were still below the charred region of the material.

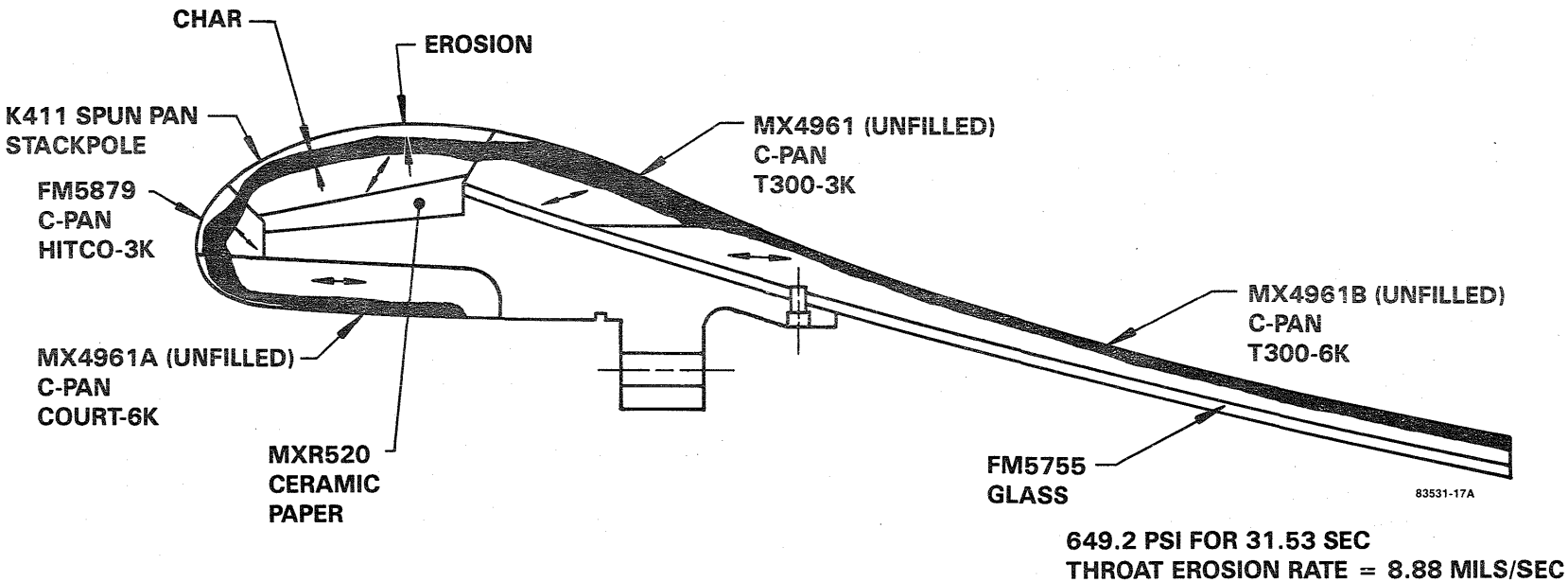

Figure 14. N-2 Nozzle Typical Erosion and Char Profile

85295-1D

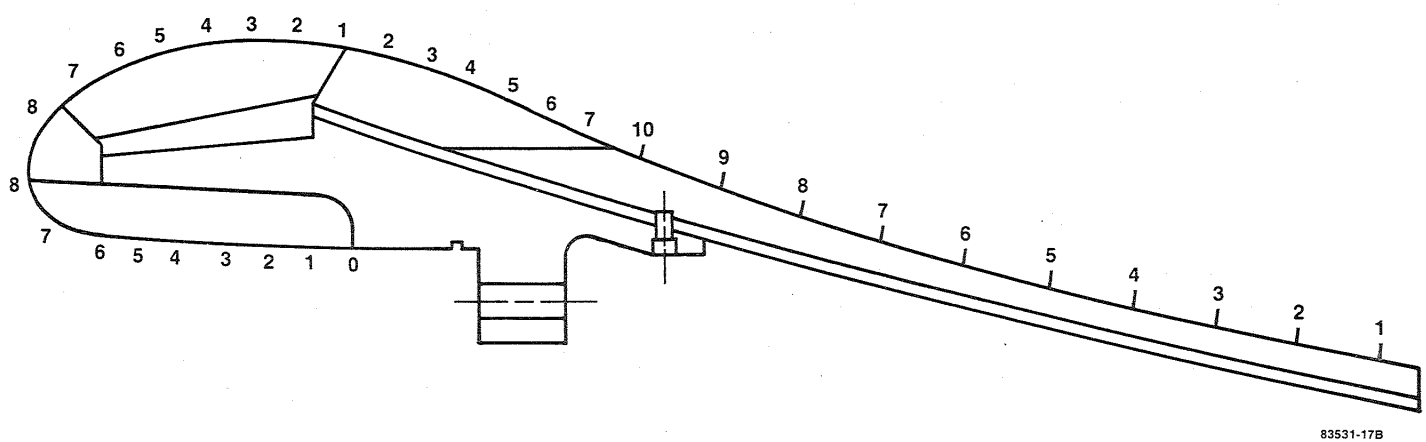

SHELL INSULATION

STATION	A/A*	ERODED DEPTH (IN.)	MATERIAL AFFECTED DEPTH (IN.)	EROSION RATE (MIL/SEC)
1	4.08	0.00	0.00	0.00
2	4.08	0.00	0.22	0.00
3	4.08	0.00	0.22	0.00
4	4.03	0.00	0.23	0.00
5	4.00	0.03	0.24	0.95
6	3.96	0.05	0.26	1.59
7	3.75	0.11	0.56	3.49
8	3.09	0.20	0.70	6.53

NOSE AND THROAT

STATION	A/A*	ERODED DEPTH (IN.)	MATERIAL AFFECTED DEPTH (IN.)	EROSION RATE (MIL/SEC)
8	1.68	0.43	0.90	13.65
7	1.52	0.29	0.66	9.21
6	1.27	0.30	0.68	9.52
5	1.10	0.31	0.74	9.84
4	1.02	0.31	0.78	9.84
3	1.01	0.26	0.78	8.25
2	1.02	0.20	0.72	6.35
1	1.08	0.16	0.66	5.08

FORWARD EXIT CONE

STATION	A/A*	ERODED DEPTH (IN.)	MATERIAL AFFECTED DEPTH (IN.)	EROSION RATE (MIL/SEC)
2	1.10	0.13	0.60	4.13
3	1.29	0.08	0.63	2.54
4	1.44	0.03	0.63	0.95
5	1.67	0.02	0.57	0.64
6	1.90	0.04	0.58	1.27
7	2.14	0.04	0.48	1.27

AFT EXIT CONE

STATION	A/A*	ERODED DEPTH (IN.)	MATERIAL AFFECTED DEPTH (IN.)	EROSION RATE (MIL/SEC)
10	2.63	0.04	0.35	1.27
9	3.00	0.01	0.33	0.32
8	3.47	0.04	0.34	0.00
7	3.98	0.02	0.34	0.64
6	4.33	0.00	0.34	0.00
5	4.96	0.02	0.35	0.64
4	5.44	0.01	0.34	0.32
3	5.88	0.00	0.26	0.00
2	6.33	0.00	0.23	0.00
1	6.76	0.00	0.25	0.00

Figure 15. Average Erosion and Char Data, N-2 Nozzle

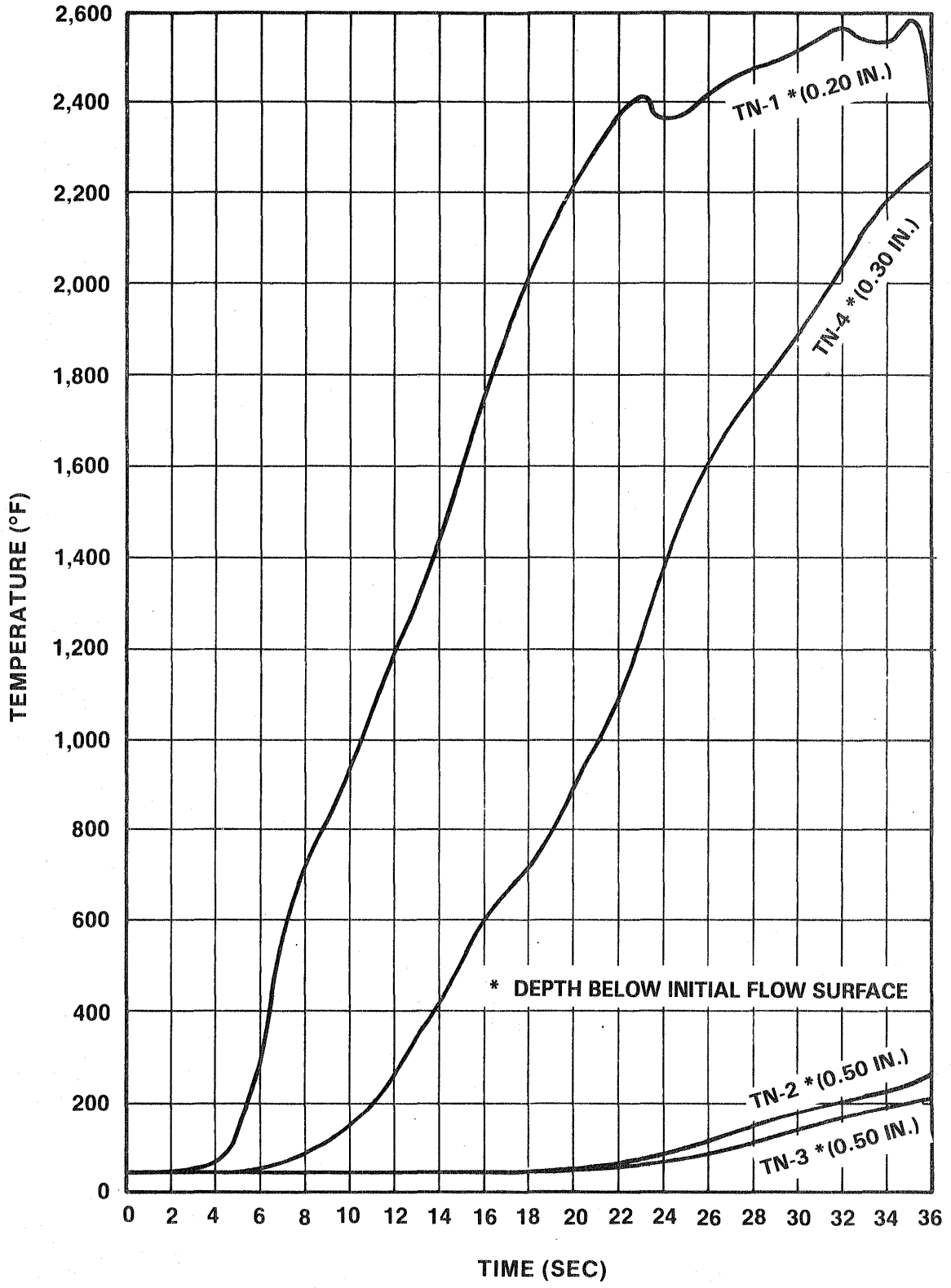

Figure 16. N-2 Nozzle Thermocouple Data

5.0 DATA SUMMARY AND ANALYSIS

The spun PAN materials generally eroded less than the rayon based materials throughout the nozzle. A 13 percent decrease in throat erosion rate based on pre/post-test diametrical measurements was exhibited by the spun PAN N-2 throat over the N-1 carbon cloth phenolic throat (8.88 vs 10.18 mils/sec).

A comparison of the N-1 and N-2 nozzle erosion rates as a function of initial area ratio, is presented in Figure 17. These data are based on an average of four cross-sectional erosion measurements. Erosion data in the aft portion of the aft exit cone are somewhat questionable due to material swelling and some localized spallation.

Figure 18 summarizes the material char data which show the PAN materials charring deeper than the rayon based materials except for the aft exit cone liner which shows them to be equivalent. This equivalency is attributed to the parallel-to-centerline wrapped PAN material swelling thereby effecting more efficient thermal insulation.

Figure 19 presents design thicknesses determined from the N-2 nozzle required to meet SRM ablative material safety factor; i.e., 2 x erosion plus 1.25 char except at the aft exit cone where the requirement is 1.5 x erosion plus 1.00 char. Figure 20 shows the product of thickness and material density; a relative weight factor. The total thickness required and the product of density and thickness are parameters used to evaluate the relative performance of the new materials.

A comparison of the thermocouple data from the baseline rayon material and the PAN materials tested in the N-2 nozzle shows the PAN materials to be much hotter. At 0.3 in. from the surface the baseline temperature was 900 to 1,000°F compared to 2,270°F for the PAN material. At a 0.5 in. depth the comparison is 100°F for the baseline and 200° to 260°F for the PAN material.

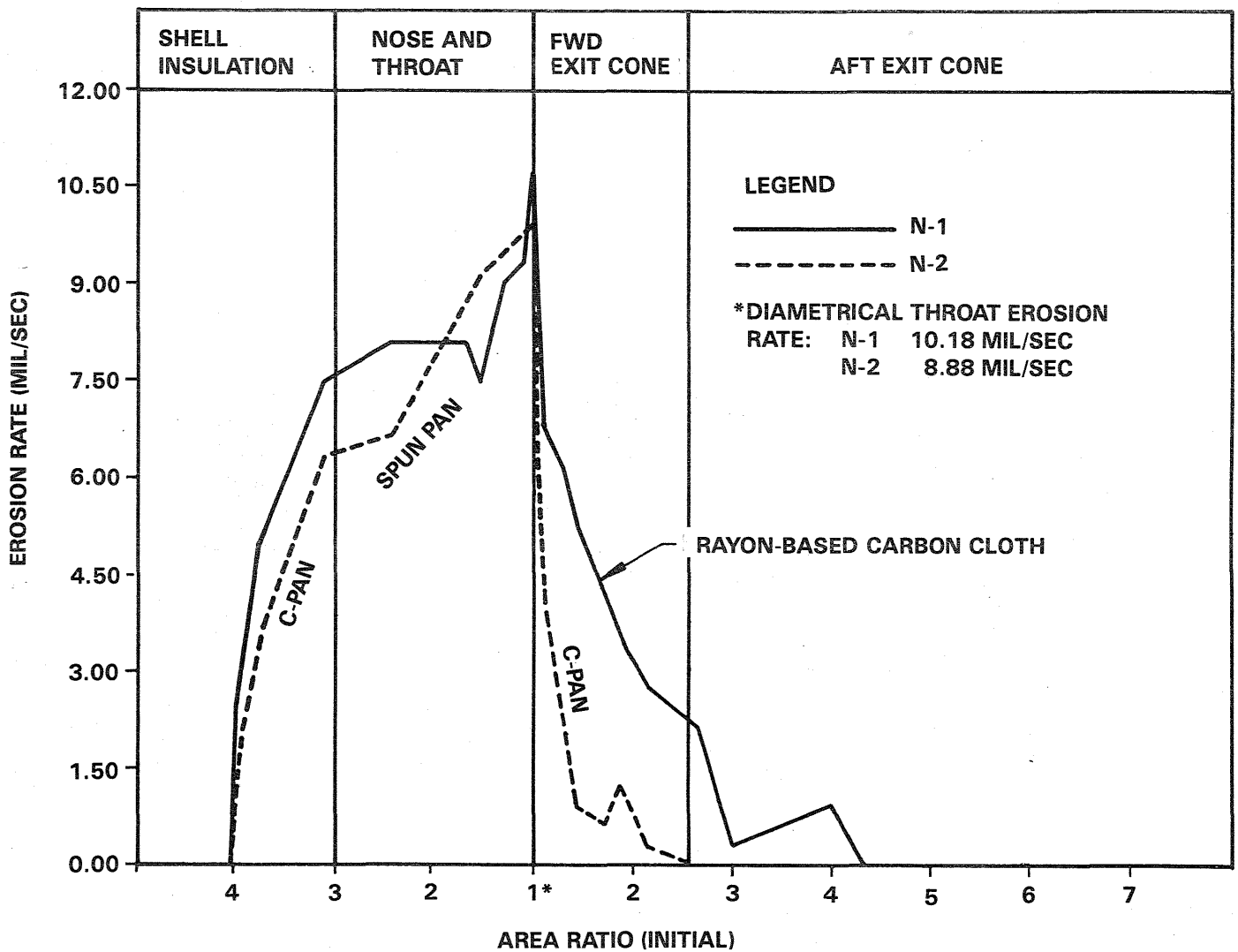

Figure 17. Erosion Rate vs Area Ratio Based on Nozzle Cross Sections

85295-2A

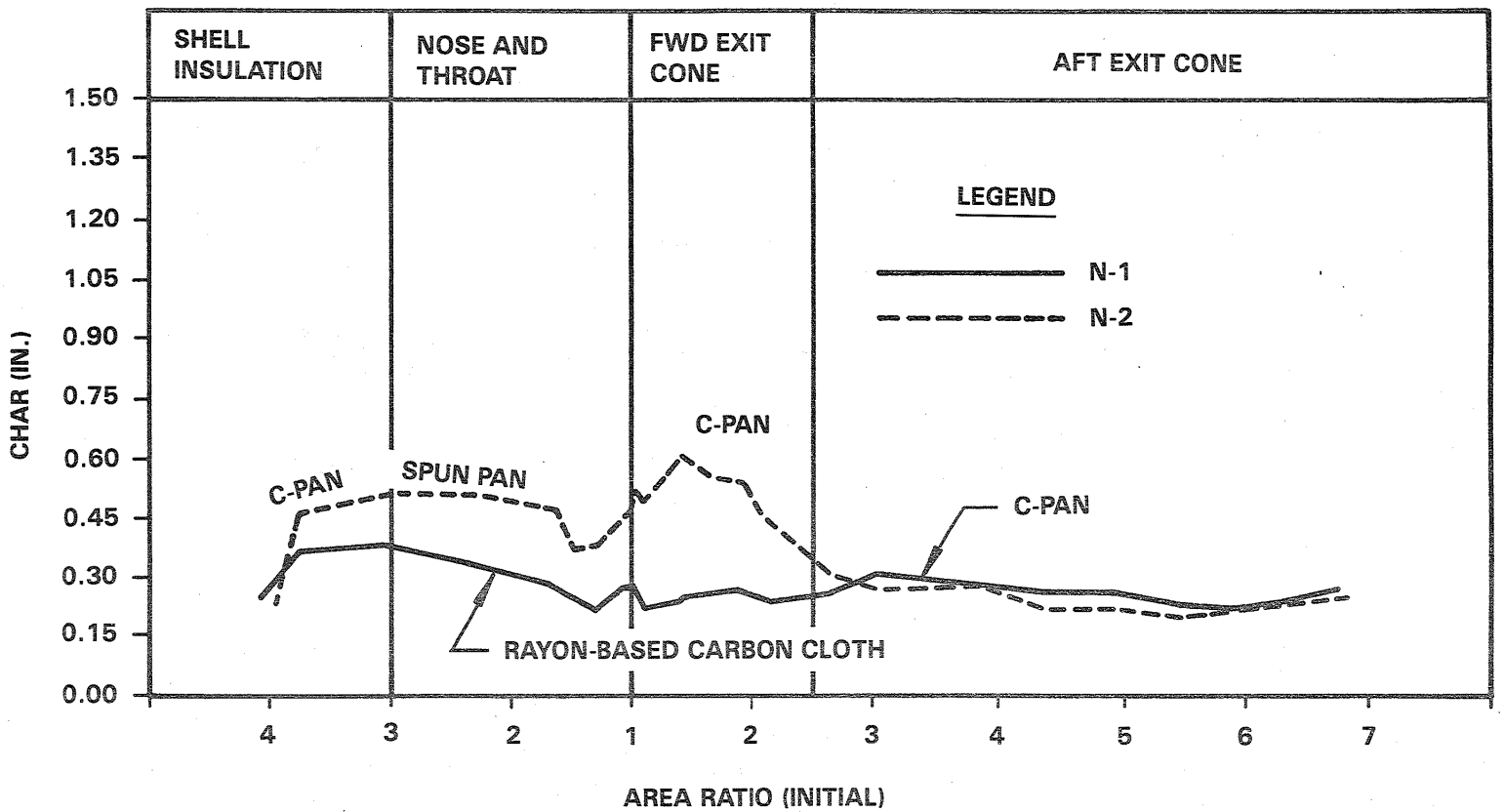

Figure 18. Char Depth vs Area Ratio Based on Nozzle Cross Sections

85295-2C

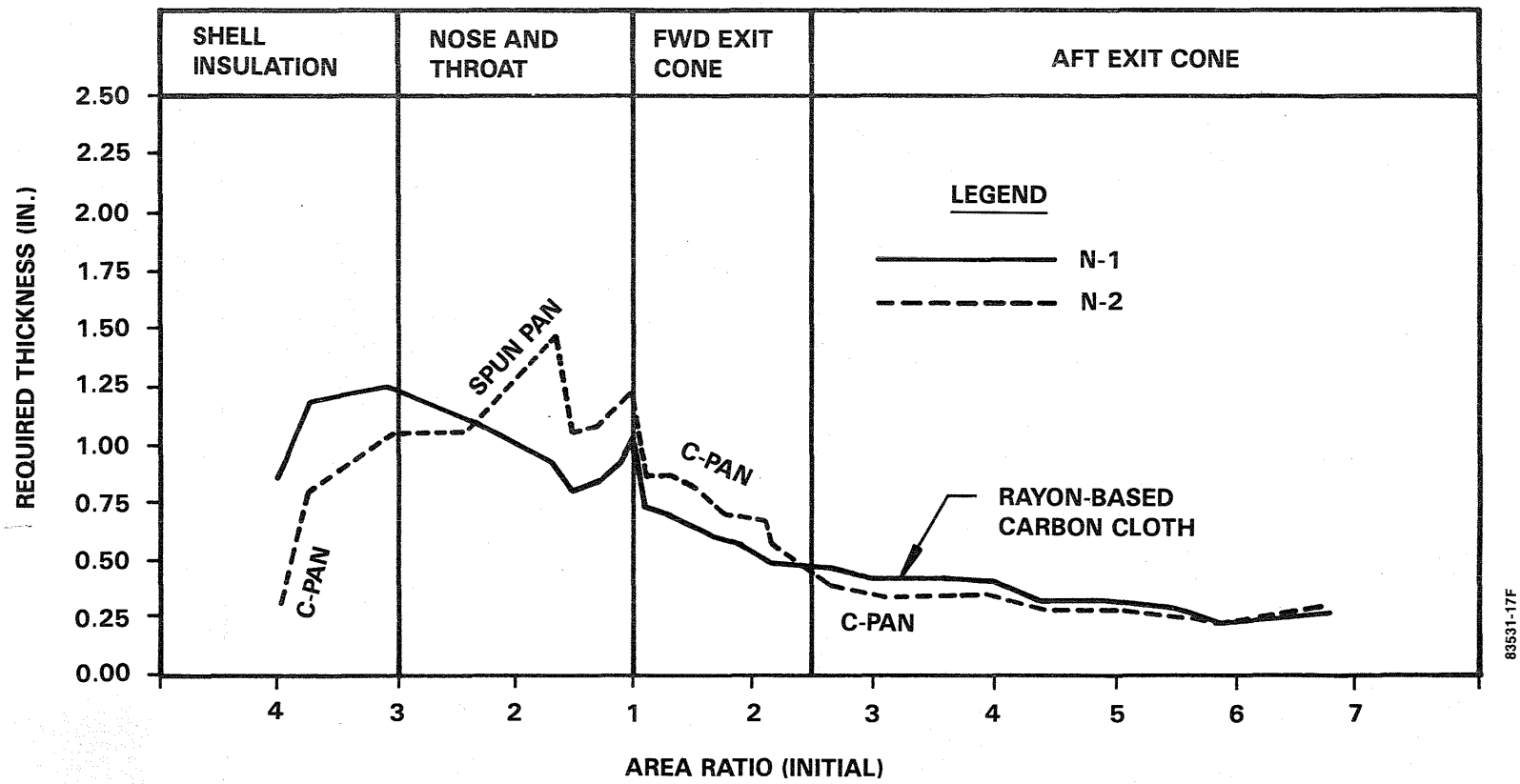

Figure 19. Required Thickness Comparisons

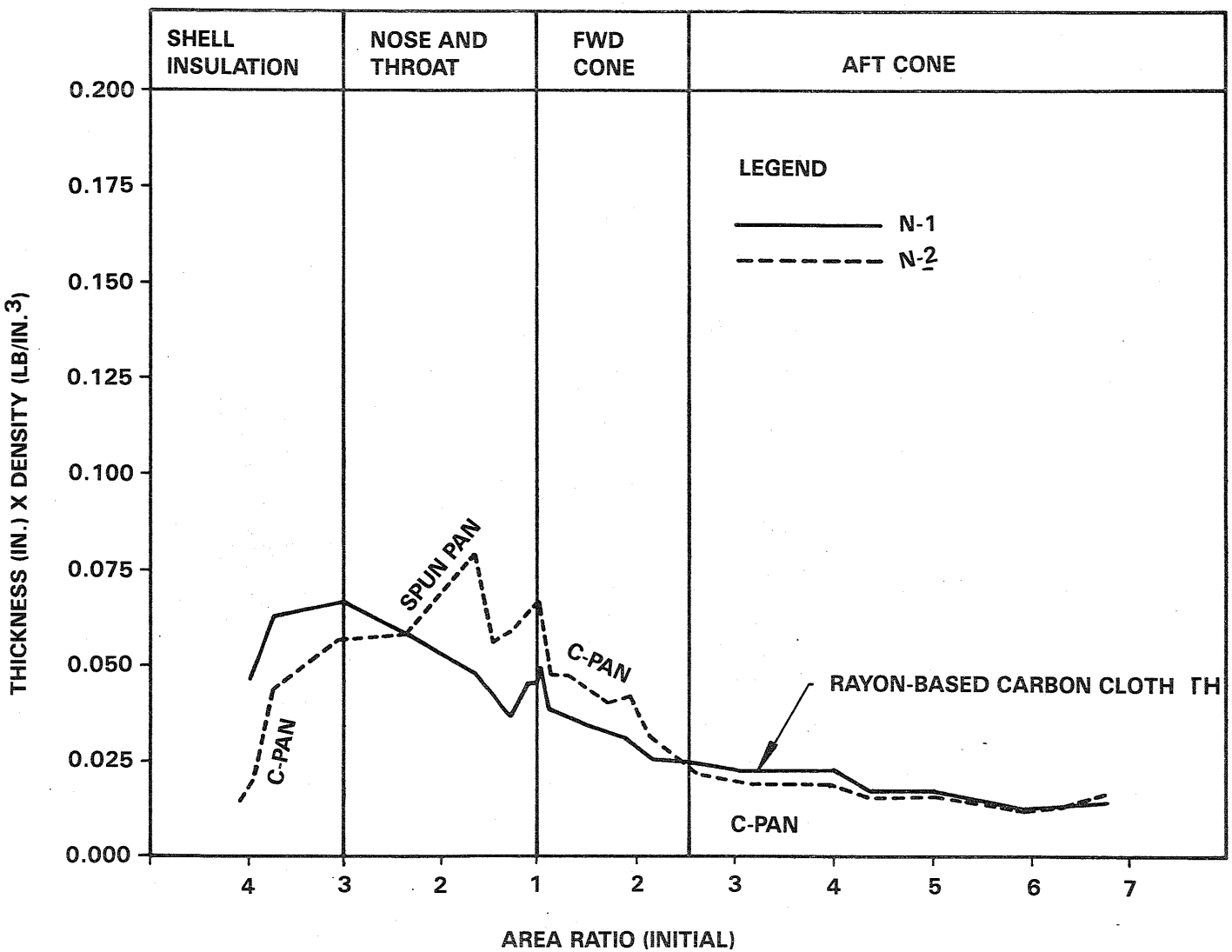

Figure 20. Thickness - Density Comparison

83531-17G

6.0 CONCLUSIONS AND RECOMMENDATIONS

The PAN materials presented no major fabrication problems, and all components were considered of high quality. In general, they exhibited lower erosion and greater char. The parallel wrapped materials exhibited considerable interply swelling.

The unfilled PAN exhibited considerably greater in-depth heating as compared to the baseline; fillers may reduce this effect.

The K411 spun PAN material exhibited 13 percent less throat erosion than the baseline FM-5055 carbon cloth based on pre/post-test diametrical measurements. This material also exhibited superior char structural integrity and no delaminations. It is recommended that the K411 be evaluated in other areas of the nozzle in subsequent tests.

This Page Intentionally Left Blank

APPENDIX C

TEST NUMBER 3 STATIC TEST AND ANALYSIS REPORT

This Page Intentionally Left Blank

TWR-13919
REV A

Space Shuttle Alternate Nozzle Materials Program Static Test Report Test No. 3

1 November 1984

DR No. 5-3

Prepared for:

National Aeronautics and Space Administration
George C. Marshall Space Flight Center
Marshall Space Flight Center, Alabama 35812

Contract NAS8-30490

WBS 1.4.2.3.10

MORTON THIOKOL, INC.
Wasatch Division
P.O. Box 524, Brigham City, Utah 84302 (801) 863-3511

Publications No. 85296

This Page Intentionally Left Blank

SPACE SHUTTLE
ALTERNATE NOZZLE MATERIALS PROGRAM
STATIC TEST REPORT
TEST NO. 3

1 November 1983

Prepared by:

A. R. Canfield, Manager
Nozzles and Controls Department

Concurred by:

E. E. Anderson
Nozzle Design Section

G. E. Nichols
SRM Nozzle

CONTENTS

		Page
1.0	INTRODUCTION AND SUMMARY	1
2.0	TEST OBJECTIVE	2
3.0	DESIGN DESCRIPTION	3
4.0	POST-TEST DATA SUMMARY AND PERFORMANCE EVALUATION	14
4.1	Nozzle Post-Test Condition	14
4.2	Post-Test Erosion and Char Measurements	14
4.3	Thermocouple Data	25
5.0	DATA SUMMARY AND ANALYSIS	29
6.0	CONCLUSIONS AND RECOMMENDATIONS	34

ILLUSTRATIONS

Figure		Page
1	Subscale Space Shuttle Nozzle Description	4
2	N-3 Nozzle Materials	5
3	N-3 Nozzle Thermocouple Locations	8
4	N-3 Nozzle Thermocouple Hole Depths	9
5	N-3 Nozzle Structural Analysis	10
6	N-3 Nozzle Thermal Analyses	11
7	N-3 Nozzle Pretest	12
8	N-3 Nozzle Exit Cone Pretest	13
9	N-3 Nozzle Throat	15
10	N-3 Nozzle Nose	16
11	N-3 Nozzle Shell Insulator	17
12	N-3 Nozzle Forward Exit Cone	18
13	N-3 Nozzle Center Exit Cone	19
14	N-3 Nozzle Aft Exit Cone	20
15	N-3 Nozzle Exit Cone	21
16	N-3 Nozzle Throat Insulation	22
17	Test Motor Assembly	23
18	Motor Chamber Pressure	24
19	N-3 Nozzle Typical Erosion and Char Profile	26
20	N-3 Nozzle Average Erosion and Char Data	27
21	N-3 Nozzle Thermocouple Data	28
22	Erosion Rate vs Area Ratio Based on Nozzle Cross Sections	30
23	Char Depth vs Area Ratio Based on Nozzle Cross Sections	31
24	Required Thickness Comparisons	32
25	Thickness-Density Comparisons	33

TABLES

Table		Page
I	N-3 Nozzle Average Tag End Test Results	7

1.0 INTRODUCTION AND SUMMARY

The N-3 nozzle was tested 6 April 1983 and was the third of four in the subscale alternate nozzle materials evaluation series. The design closely simulated the configuration and flow profiles of the full-scale SRM nozzle.

The N-3 nozzle is the second nozzle using alternate materials for evaluation. Pitch materials were used in the nose and throat, filled continuous polyacrylonitrile (PAN) materials in the shell insulator and forward exit cone, and a lightweight PAN in the aft exit cone. A low density glass was used to insulate the throat.

Overall performance of the N-3 nozzle was good. Erosion was generally smooth and uniform. The pitch throat eroded less than the baseline rayon- and PAN-based materials; however, the char depth was considerably greater. The shell insulator and forward exit cone erosion was about the same as the previous PAN test and less than the baseline material. The aft exit cone low density material performance was about the same as the previous PAN and baseline rayon tests.

The pitch material char rate was too great for use in the SRM nozzle. The low density PAN performance was good and will be further evaluated in the next nozzle test.

A description of the N-3 nozzle and test data is presented in the following sections.

2.0 TEST OBJECTIVE

The objective of the test was to obtain performance characteristics of standard density pitch and PAN materials and low density glass and PAN materials under static test conditions for comparison to baseline materials.

3.0 DESIGN DESCRIPTION

The nozzle is a fixed, partially submerged design consisting of a steel shell, shell insulator, nose ring, throat ring, and exit cone section. Overall geometry and contour simulate those of the full-scale SRM nozzle. The N-3 nozzle is shown in Figure 1.

Figure 2 presents the materials used in the N-3 nozzle. The throat and nose used pitch materials, the forward exit cone/center exit cone and shell insulator used PAN materials, and the aft exit used a low density PAN material. The throat insulation was a glass mat phenolic. The throat, nose, and shell insulator were hydroclave cured while the exit cone and throat insulator were autoclave cured. The material specifics are:

Shell Insulator

U.S. Polymeric FM5879A. Hercules AS4-3K continuous PAN fiber is used in an eight-harness weave. The fiber has a 34-million modulus and a 94 percent carbon yield. A 15 percent filled phenolic resin is used.

Nose

U.S. Polymeric FM5750A. This is U.S. Polymeric's pitch material using Union Carbide's VC0162-4K fiber woven into an eight-harness fabric and then carbonized. This pitch fiber has a 45-million modulus and a 99 percent carbon yield. The phenolic resin has 15 percent carbon powder filler.

Throat

Fiberite K458. This material used Union Carbide's P55 carbon fiber grade VSB-16 which is a 4,000 filament continuous fiber from a pitch precursor. The fiber has a 45-million modulus and 99 percent carbon yield. The fiber is fully processed and then woven into a five-harness fabric and impregnated with a filled phenolic resin.

Forward Exit Cone

U.S. Polymeric FM5879B. Celion 3K continuous PAN fiber in an eight-harness weave is used. The fiber has a 34-million modulus and a 96 percent carbon yield. Fifteen percent carbon powder filler is added to the phenolic resin.

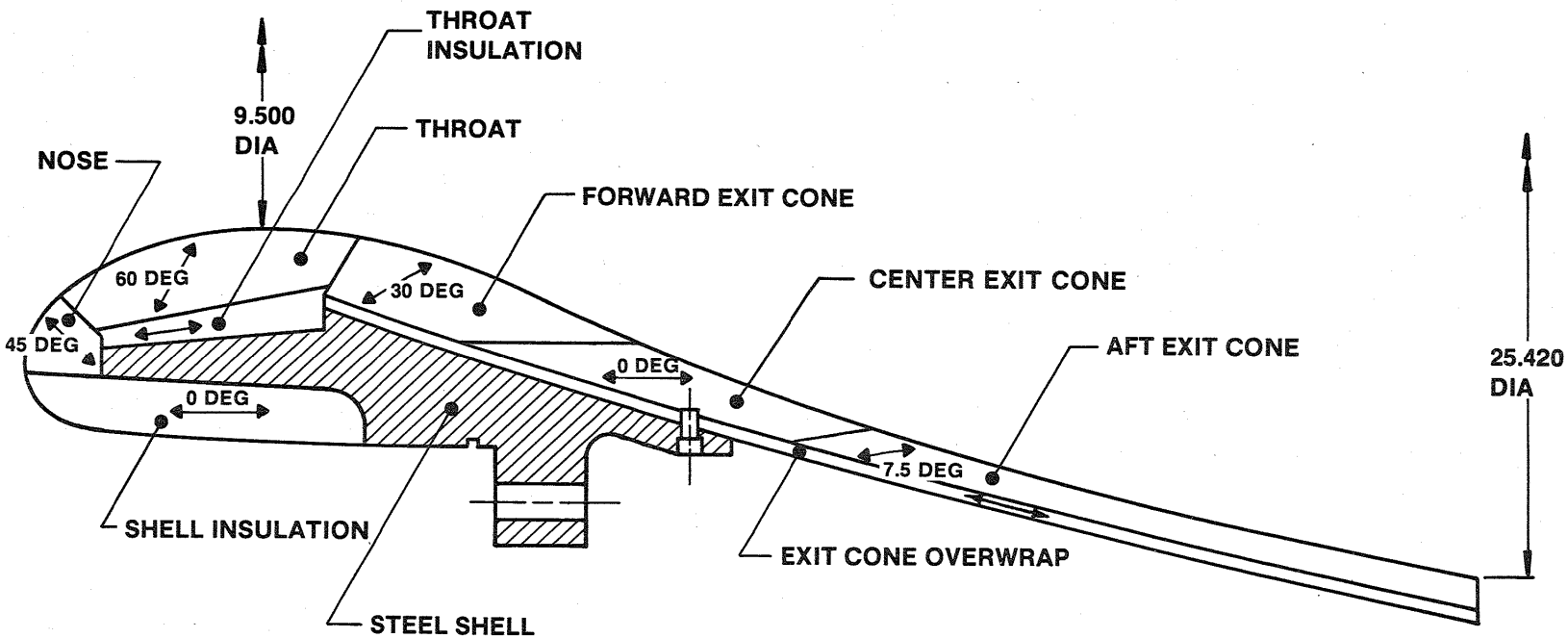

(REFERENCE DRAWING 7U52387)

Figure 1. Subscale Space Shuttle Nozzle Description

84086-6D

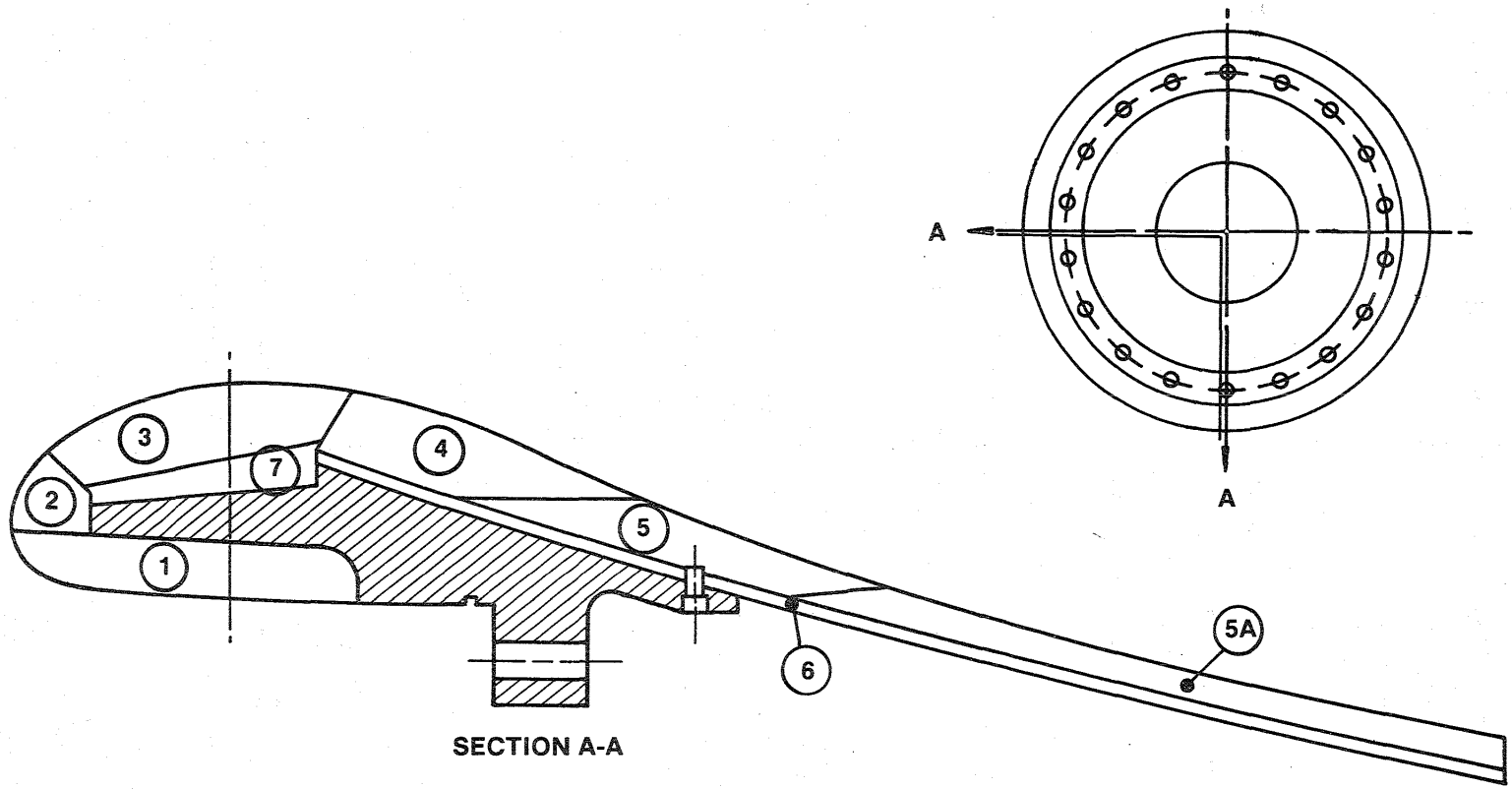

	1	2	3	4	5	5A	6	7
NOZZLE NO. 3	FM5879A C-PAN HER-3K	FM-5750A G-PITCH VCO162-4K	K-458 G-PITCH P55-4K	FM5879B C-PAN CELAN-3K	FM5879C C-PAN HITCO-6K	MX-134LD LD PAN T-300-3K	FM5755 GLASS	FM-5898 LD GLASS

Figure 2. N-3 Nozzle Materials

84086-6F

Center Exit Cone

U.S. Polymeric FM5879C. This material uses a Hitco Hi-Tex-6K continuous PAN fiber with a 33-million modulus and a 94 percent carbon yield. The phenolic resin is 15 percent filled.

Aft Exit Cone

Fiberite MX134LD. This is a lightweight PAN material with a density of 1.0 to 1.30 g/cc. An open plain weave of Union Carbide's T-300 3K fiber is used. This material uses 10 to 13 percent carbon microballoon filler and 38 to 44 percent butadiene-acrylonitrile modified phenolic resin.

Exit Cone Overwrap

U.S. Polymeric FM5755. This is a heavyweight E-glass, eight-harness satin phenolic with up to 6 percent silica powder filler.

Throat Insulation

U.S. Polymeric FM5898. This is an E-glass fiber mat with a cured composite density of 1.0 g/cc. It has a high phenolic resin content (66 percent) and no filler.

Specimens were taken from each ablative and insulative component and tested for residual volatiles, resin content, specific gravity, and compressive strength. The results presented in Table I are the average results from three tests.

Figures 3 and 4 show the thermocouple locations and required/measured hole depths. Sixteen thermocouple probes were located in the exit cone--4 each at depths of 0.2, 0.3, 0.4, and 0.5 in. at expansion ratios of 2.0, 3.3, 5.0, and 6.2.

Figure 5 presents the results of the 1-D structural analyses of the N-3 nozzle. All components show positive margins of safety using a 1.40 factor of safety.

Figure 6 presents predicted erosion and material affected depth at selected locations. The maximum predicted backside temperature is 200°F and occurs in the aft exit cone region.

The prefire throat diameter was 9.499 in. and finished nozzle weight was 531.3 lb. Figures 7 and 8 present prefire photographs of the nozzle.

TABLE I

N-3 NOZZLE AVERAGE TAG END TEST RESULTS

	Residual Volatiles (%)	Resin Content (%)	Specific Gravity	Compressive Strength (psi)
Forward Exit Cone - PAN	1.86	24.46	1.54	11,772
Center Exit Cone - PAN	1.79	25.46	1.56	13,187
Aft Exit Cone - Low Density PAN	3.17	40.78	1.27	19,154
Exit Cone Overwrap - Glass	1.88	29.60	1.91	22,815
Throat - Pitch	2.32	28.83	1.63	9,124
Throat Insulation - Lightweight Glass	0.82	66.18	1.08	17,977
Nose - Pitch	1.47	25.68	1.66	9,611
Shell Insulator - PAN	1.47	23.27	1.50	N/A
Specification Limits:				
PAN	N/A	N/A	N/A	N/A
Glass	0-3.25	24-38	1.7-2.15	16,630-60,000
Low Density PAN	N/A	N/A	N/A	N/A
Lightweight Glass	N/A	N/A	N/A	N/A
Pitch	N/A	N/A	N/A	N/A

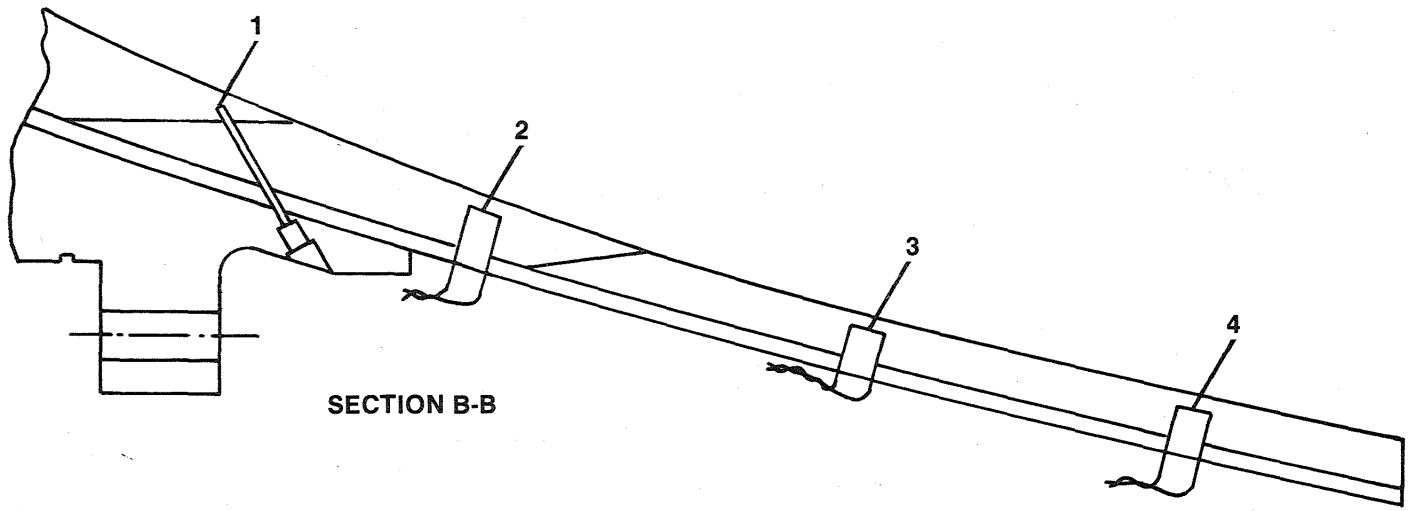

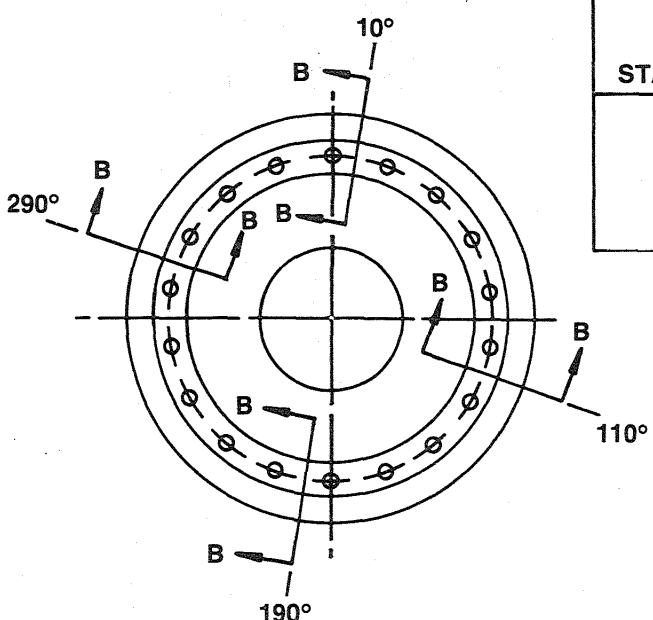

STATION	PLANE (DEG)	DEPTH BELOW FLOW CONTOUR (IN.)	THERMOCOUPLE TYPE
1-4	10	0.2	W 5% RE/W 26% RE
1-4	110	0.3	CHROMEL/ALUMEL
1-4	190	0.4	CHROMEL/ALUMEL
1-4	290	0.5	CHROMEL/ALUMEL

Figure 3. N-3 Nozzle Thermocouple Locations

84086-6E

STATION	PLANE (DEG)	REQUIRED DEPTH (IN.)	MEASURED DEPTH (IN.)
1	10	2.900 + 0.000 - 0.030	2.895
2		1.020	1.011
3		0.800	0.799
4		0.800	0.794
1	110	2.800 + 0.000 - 0.030	2.796
2		0.920	0.918
3		0.700	0.697
4		0.700	0.697
1	190	2.600 + 0.000 - 0.030	2.598
2		0.820	0.817
3		0.600	0.596
4		0.600	0.598
1	290	2.400 + 0.000 - 0.030	2.398
2		0.720	0.719
3		0.500	0.495
4		0.500	0.498

Figure 4. N-3 Nozzle Thermocouple Hole Depths

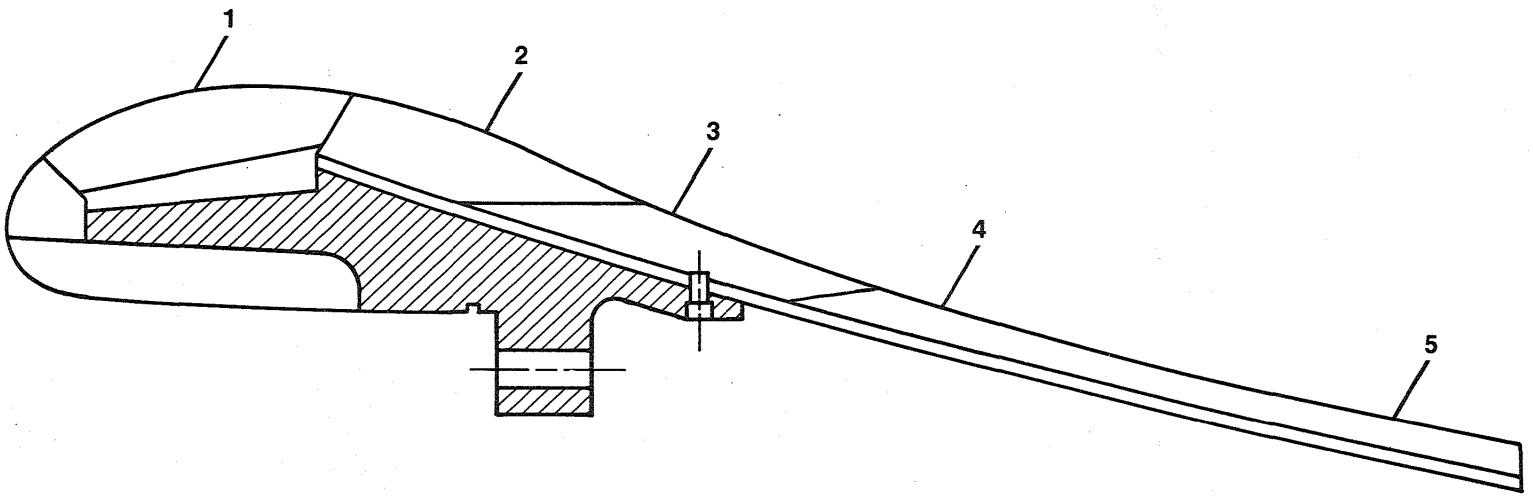

ANALYSIS POINTS**	MATERIAL	STRESS TYPE	STRESS	ALLOWABLE STRESS	MS*
1	PITCH	WITH PLY	-860	-2,300	0.91
2	CONTINUOUS PAN	WITH PLY	2,900	9,700	1.38
3	CONTINUOUS PAN	WITH PLY	-1,634	-8,600	2.75
4	GLASS CLOTH	WITH PLY	-4,710	-13,000	0.97
5	LOW DENSITY PAN	WITH PLY	2,653	10,000	1.69

$$*MS = \frac{\text{ALLOWABLE STRESS}}{1.4 \times \text{STRESS}} - 1 \text{ WHERE FACTOR OF SAFETY} = 1.4$$

**ALL ANALYSES WERE CONDUCTED AT 32 SECONDS INTO THE BURN AND MEOP = 830 PSIA

Figure 5. N-3 Nozzle Structural Analysis

84086-6C

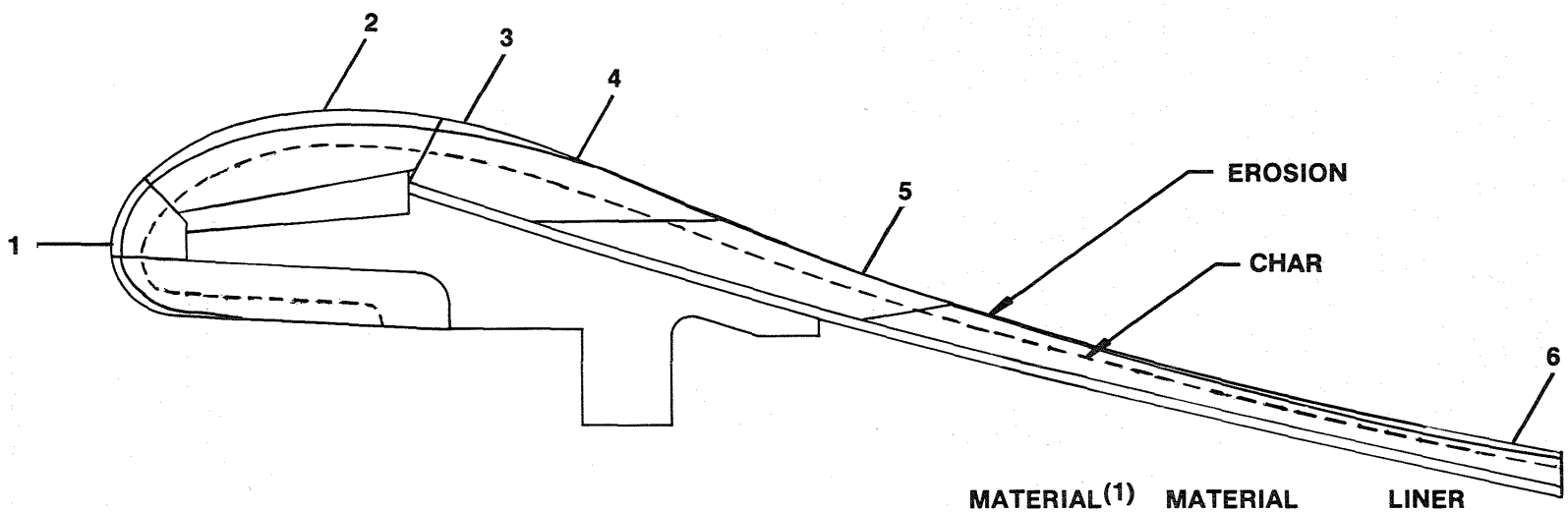

STATION	EXPANSION RATIO (A/A*)	THICKNESS (IN.)	EROSION(2) DEPTH (IN.)	EROSION RATE (MILS/SEC)	MATERIAL(1) AFFECTED DEPTH (IN.)	MATERIAL AFFECTED RATE (MIL/SEC)	LINER BACK FACE TEMPERATURE (°F)
1	-2.84	1.75	0.18	5.6	0.91	28.4	76
2	1.00	1.75	0.23	7.2	0.65	20.3	70
3	1.14	1.62	0.20	6.3	0.67	20.9	70
4	1.48	1.62	0.02	0.6	0.49	15.3	70
5	3.11	1.06	0	0	0.45	14.1	70
6	7.05	0.70	0.19	5.9	0.45	14.1	200

(1) a) CHAR = 2.08 X N-1 NOZZLE (STATIONS 1 AND 2)
b) CHAR = N-2 NOZZLE (STATIONS 3 THRU 6)

(2) a) EROSION = 0.66 X N-1 NOZZLE (STATIONS 1 AND 2)
b) EROSION = N-2 NOZZLE (STATIONS 3 THRU 5)
c) EROSION = $\frac{\rho N\text{-}2}{\rho N\text{-}3}$ X N-2 NOZZLE, WHERE ρ N-2 = DENSITY OF MATERIAL IN N-2 NOZZLE (S.G = 1.52)
ρ N-3 = DENSITY OF MATERIAL IN N-3 NOZZLE (S.G = 1.26)

Figure 6. N-3 Nozzle Thermal Analyses

84086-6B

Figure 7. N-3 Nozzle Pretest

Figure 8. N-3 Nozzle Exit Cone Pretest

4.0 POST-TEST DATA SUMMARY AND PERFORMANCE EVALUATION

4.1 NOZZLE POST-TEST CONDITION

The nozzle was in good post-test condition and there were no major anomalies. The throat and nose sections of pitch material showed good integrity. There were no delaminations in the throat even though it charred completely through. The nose ring was unbonded from nozzle, had several delaminations, and was charred completely through also. Both pitch parts had excellent char integrity.

The shell insulator had one delamination at the forward tip which is a substantial improvement over the previous ones.

The exit cone performed similar to the past tests. The forward exit cone wrapped 30 deg to centerline showed no delaminations but a fairly deep char. The center exit cone section performance was good with no anomalies. The low density PAN aft exit cone showed minor erosion and some lifting of plies and some spallation.

The glass throat insulation experienced surface char and had three hoop fractures with evidence of char in the cracks.

The glass cloth insulation/structure overwrap on the exit cone liner was intact and completely unaffected by either internal or external environments.

The metal housing showed no indication of damage but was somewhat discolored by heating for plastic parts removal. The post-test conditions of the plastics are shown in Figures 9 through 16.

Figure 17 shows the JPL test motor and Figure 18 presents the pressure-time trace for the N-3 motor. The average web burn pressure was 658.8 psi and the web time was 31.56 sec.

4.2 POST-TEST EROSION AND CHAR MEASUREMENTS

Erosion rates were calculated using average web burn time. Measured throat erosion rates were calculated using one-half of the average difference of six prefire and postfire diametrical throat measurements. Erosion at other locations were recorded using measurements taken from the cross sectioned nozzle. Char thickness was obtained by direct measurement taken on the sectioned nozzle components.

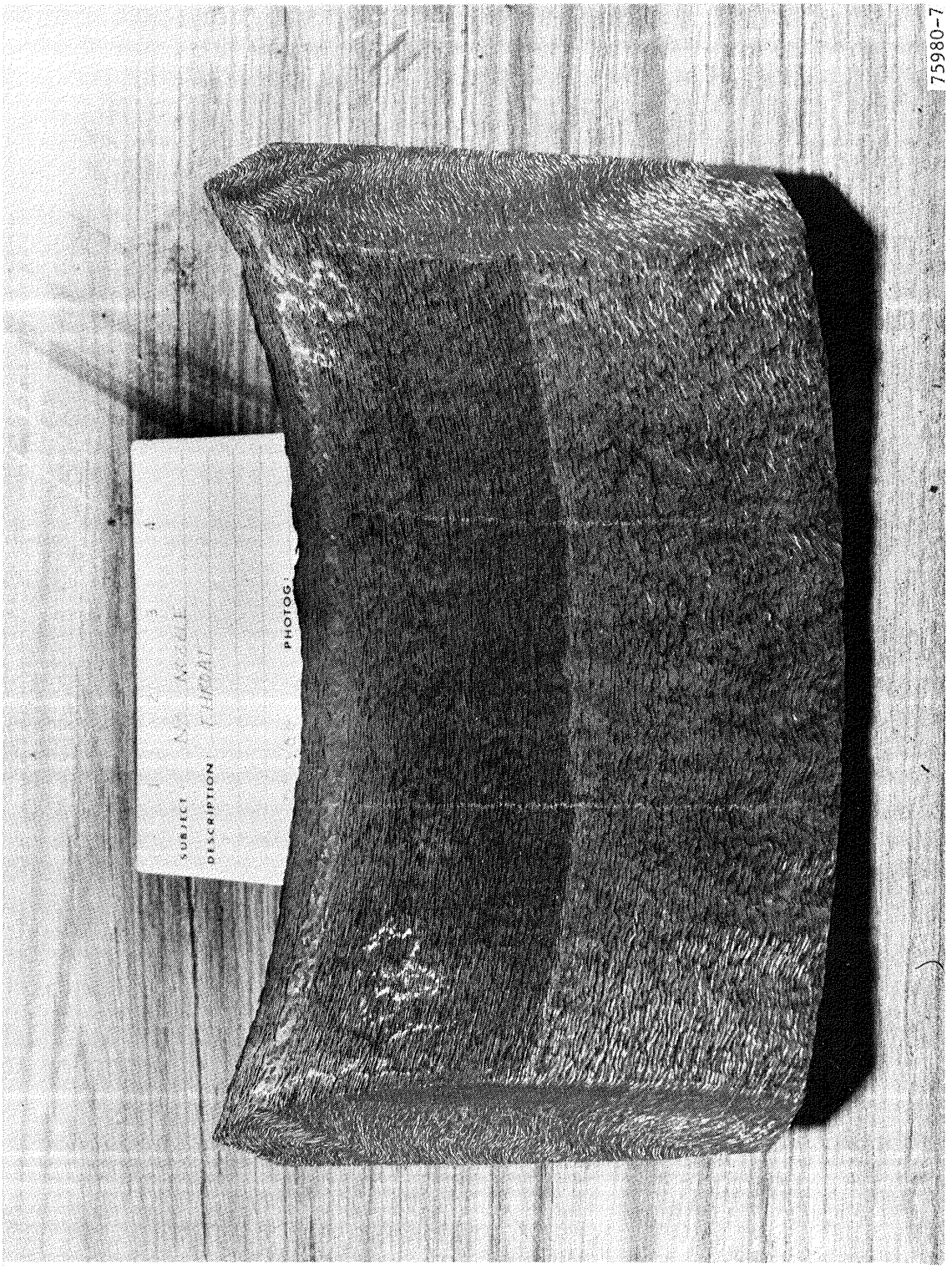

Figure 9. N-3 Nozzle Throat

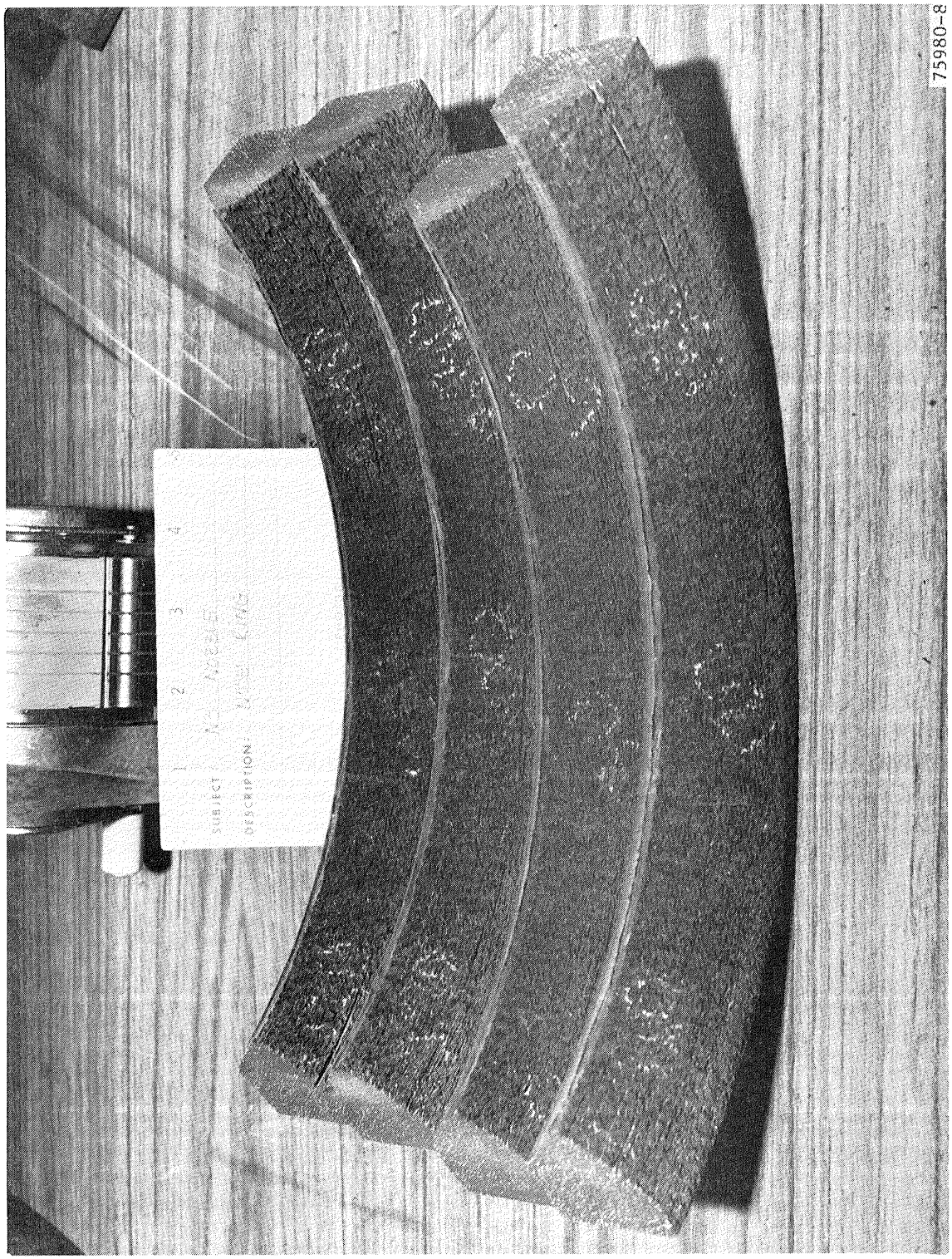

Figure 10. N-3 Nozzle Nose

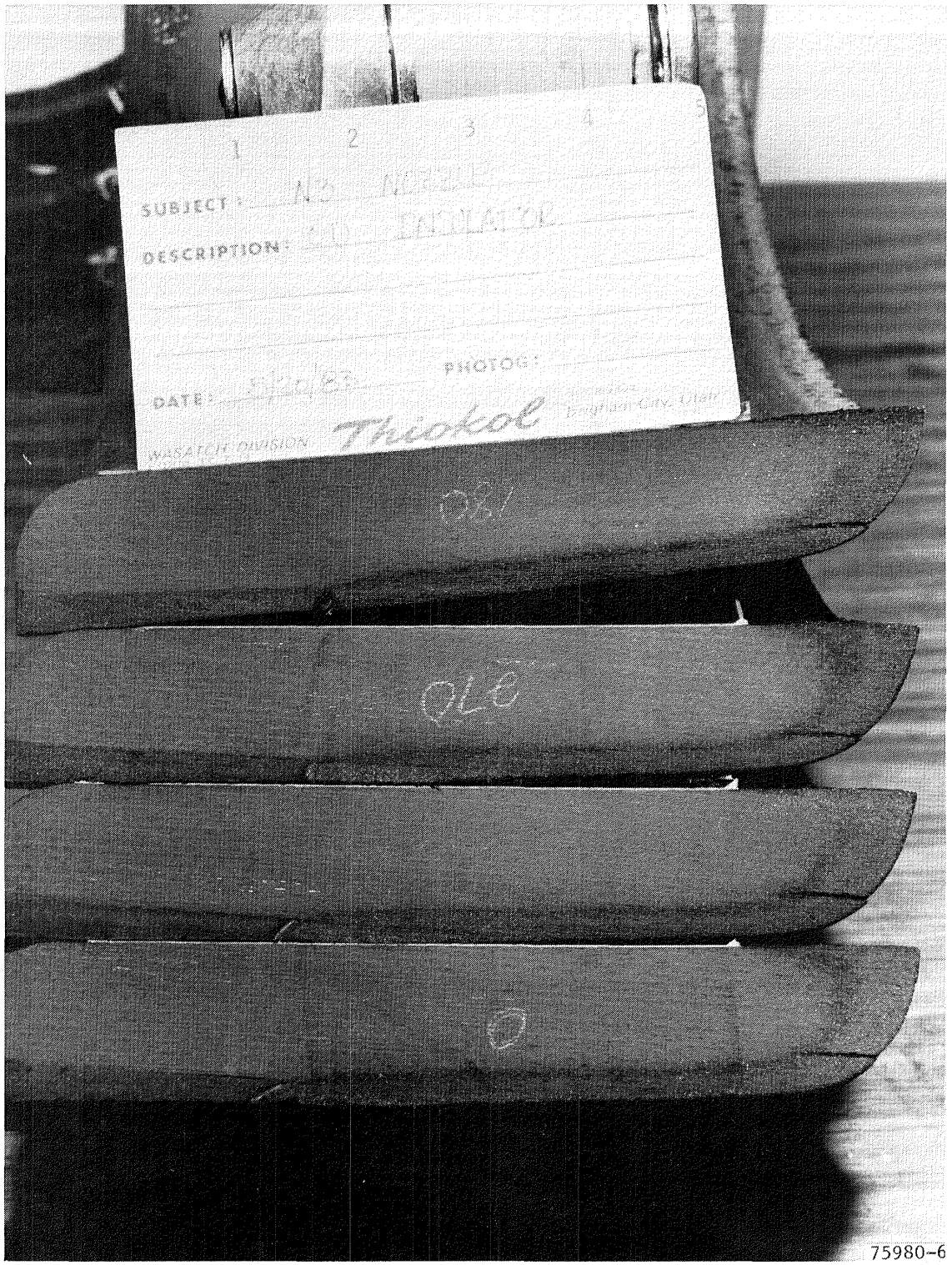

Figure 11. N-3 Nozzle Shell Insulator

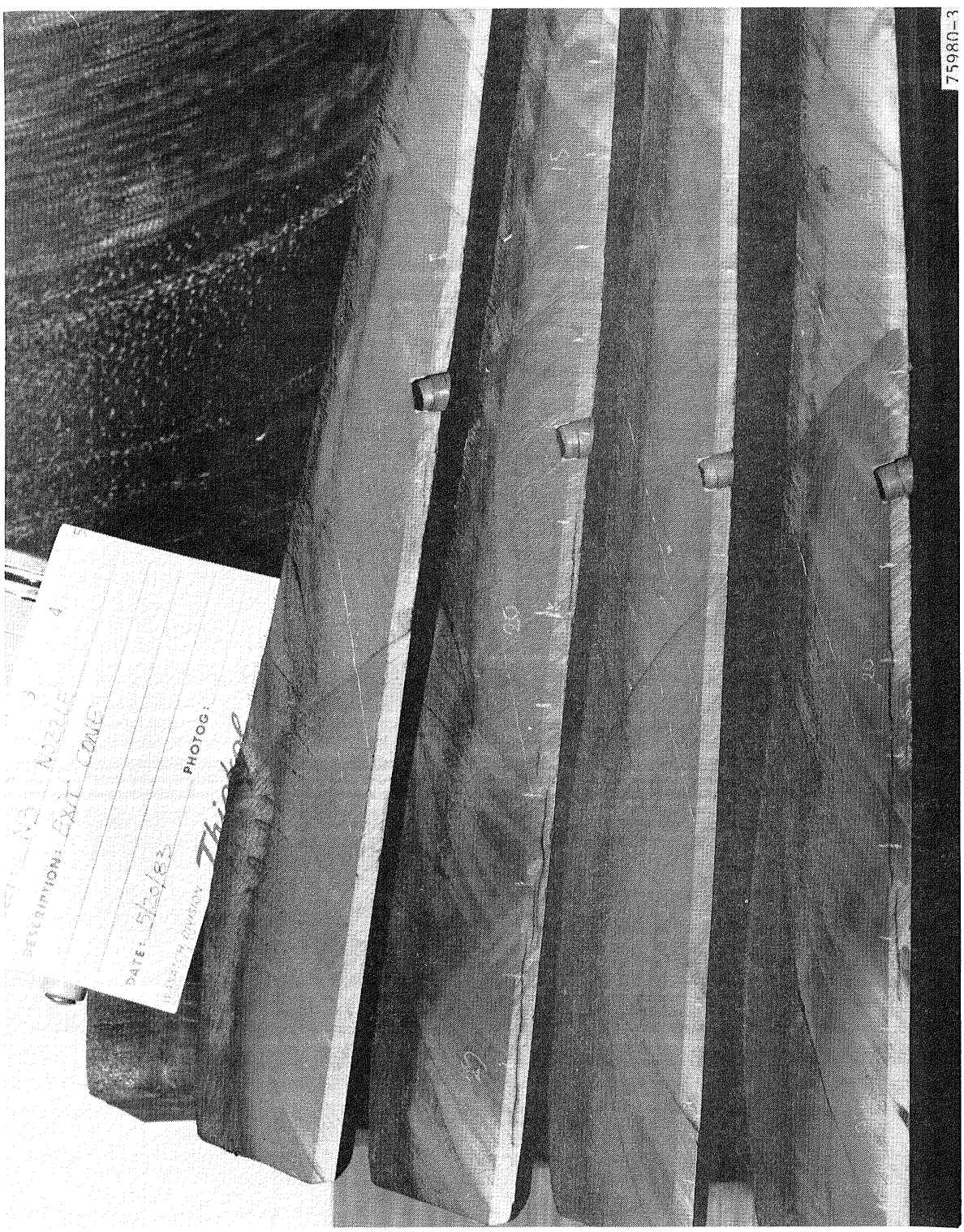

Figure 12. N-3 Nozzle Forward Exit Cone

Figure 13. N-3 Nozzle Center Exit Cone

Figure 14. N-3 Nozzle Aft Exit Cone

Figure 15. N-3 Nozzle Exit Cone

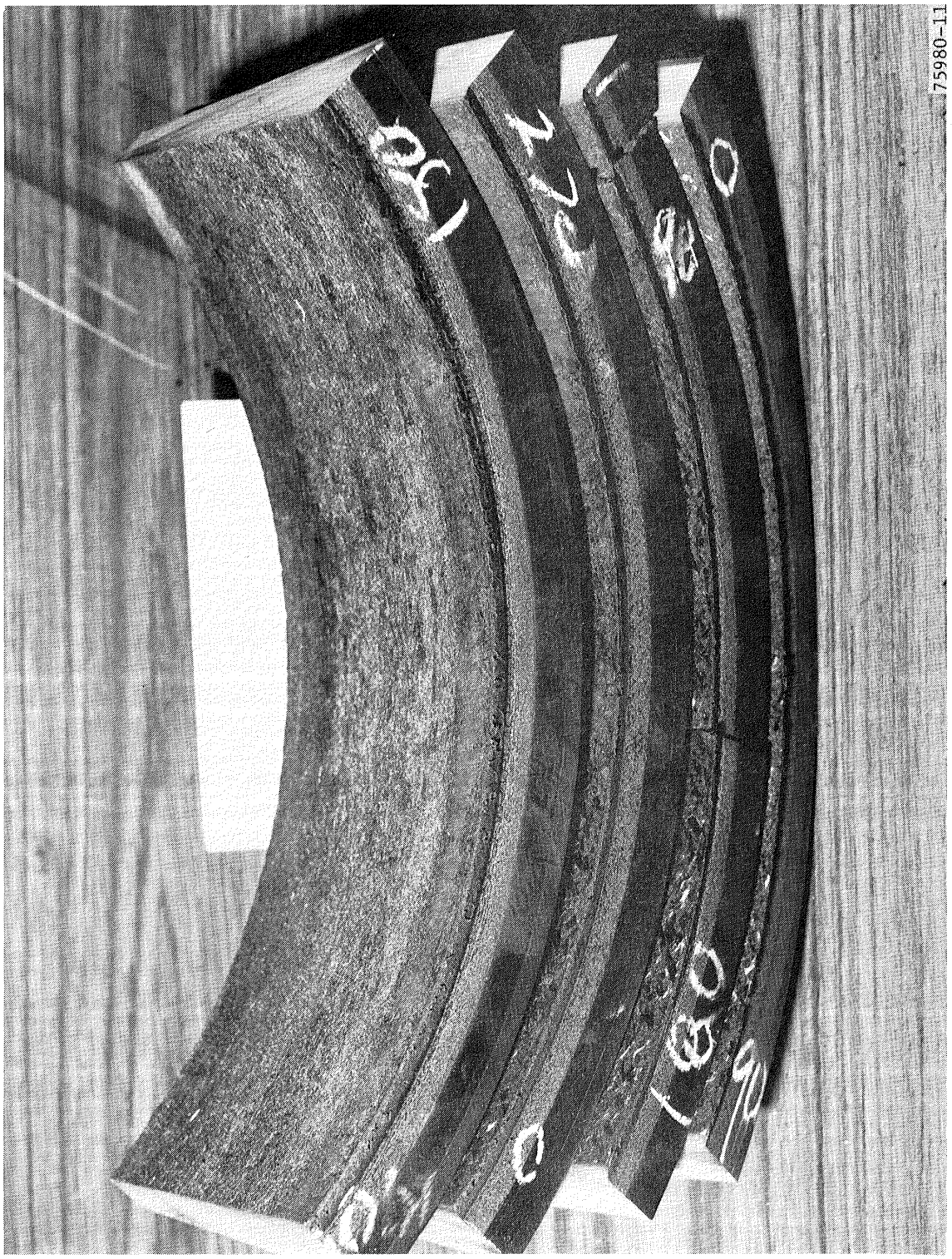

Figure 16. N-3 Nozzle Throat Insulation

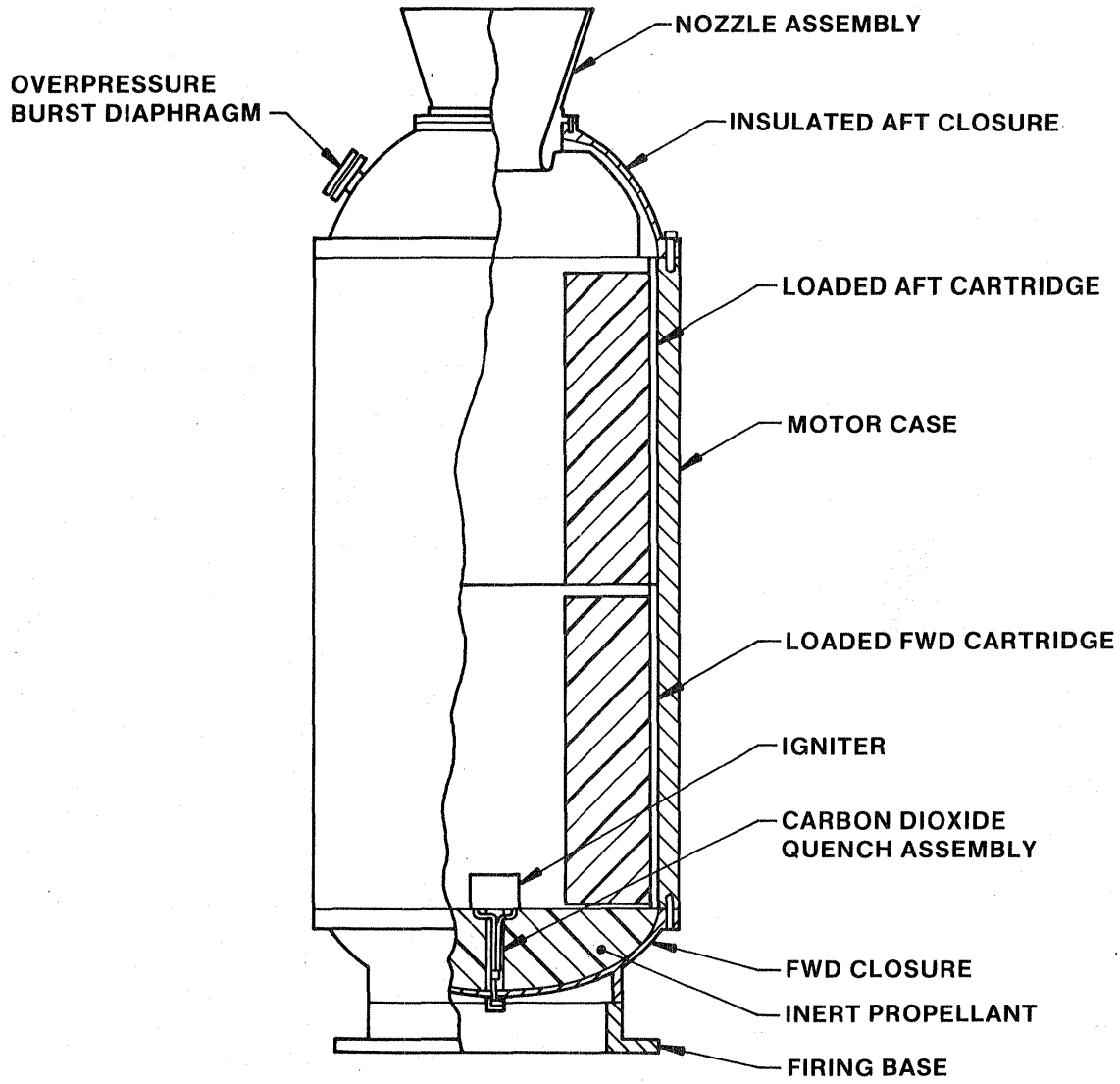

Figure 17. Test Motor Assembly

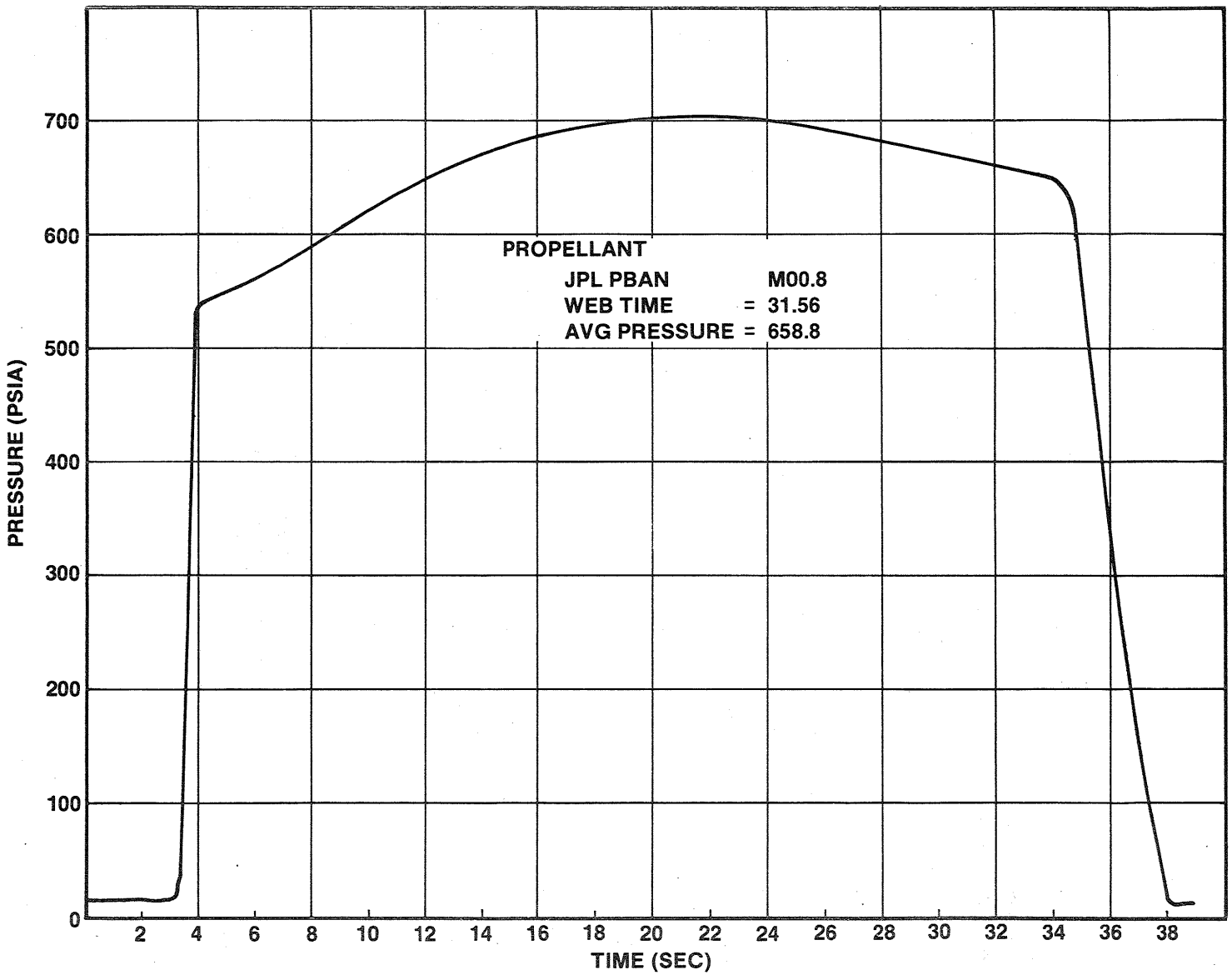

Figure 18. Motor Chamber Pressure

84086-5G

The average prefire nozzle throat diameter was 9.499 in.; the average postfire nozzle throat diameter was 10.045 inches. The average throat erosion rate based on an average web time of 31.56 sec and the postfire diametrical measurement is 8.65 mil/sec. A typical erosion and char profile is shown in Figure 19; Figure 20 presents the average measured eroded depths, material affected depths, and calculated erosion rates as a function of initial area ratio. These data are based on average measurements taken from four nozzle cross sections (0, 90, 180, and 270 deg). Material affected depth is the perpendicular distance from the initial uneroded surface to the char line. Stations 0, 1, and 2 on the shell insulation were covered by the case insulation.

4.3 THERMOCOUPLE DATA

Sixteen thermocouples (Figures 13 and 14) were installed in the exit cone to measure material thermal response. The four forward thermocouples were grounded metal sheath type similar to those used in the prior two tests. These probes functioned satisfactorily except for T1-110 (initially 0.3 in. below uneroded flow surface) which recorded temperatures lower than those at 0.4 in. from the uneroded surface. T1-110 data are therefore considered to be invalid. The 0.2 in. deep thermocouple measured approximately 1,700°F at end of burn. This compares to 2,580°F measured in the last test in the same location in an unfilled PAN material. This substantiates that the filled materials have lower thermal conductivity and are probably better suited for nozzle application.

The other 12 thermocouples were plug-type instruments using low density PAN material as the plug with ungrounded wires twisted together at the tip. These plugs were bonded into predrilled holes in the center and aft exit cone. The data were erratic for all of these thermocouples and investigation into this problem disclosed that they should have been grounded with welded tips. The next test will use thermocouples with these features. Figure 21 presents the forward thermocouple data.

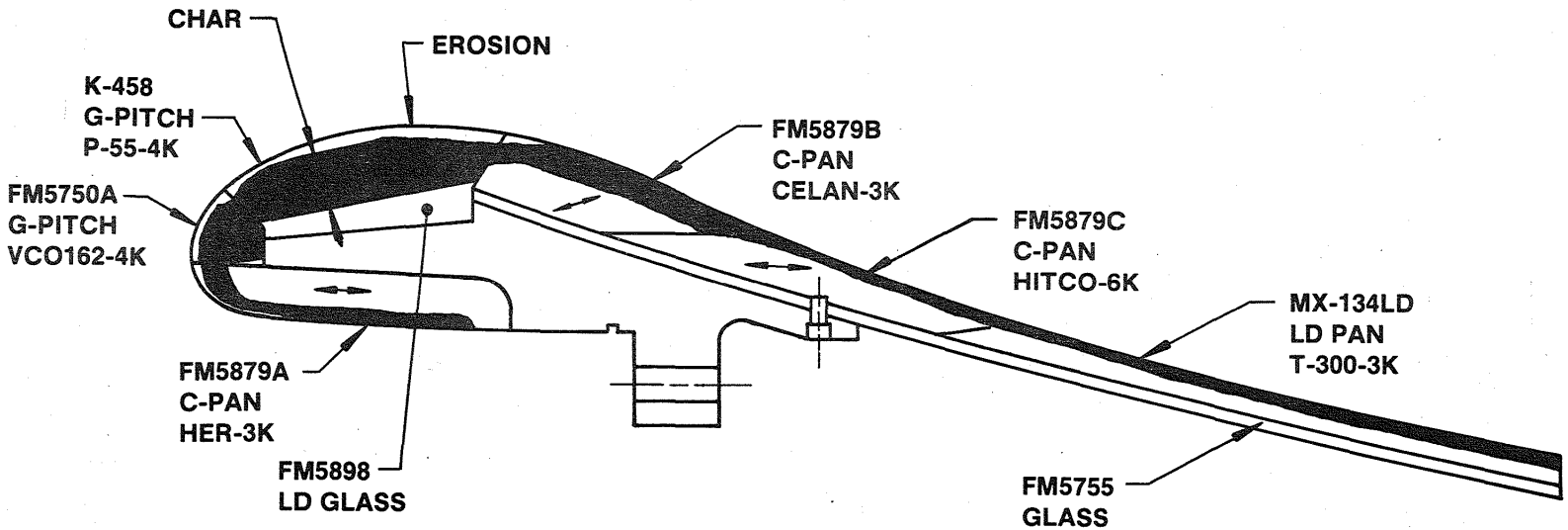

658.8 PSI FOR 31.56 SEC
THROAT EROSION RATE = 8.6 MILS/SEC

Figure 19. N-3 Nozzle Typical Erosion and Char Profile

84086-6A

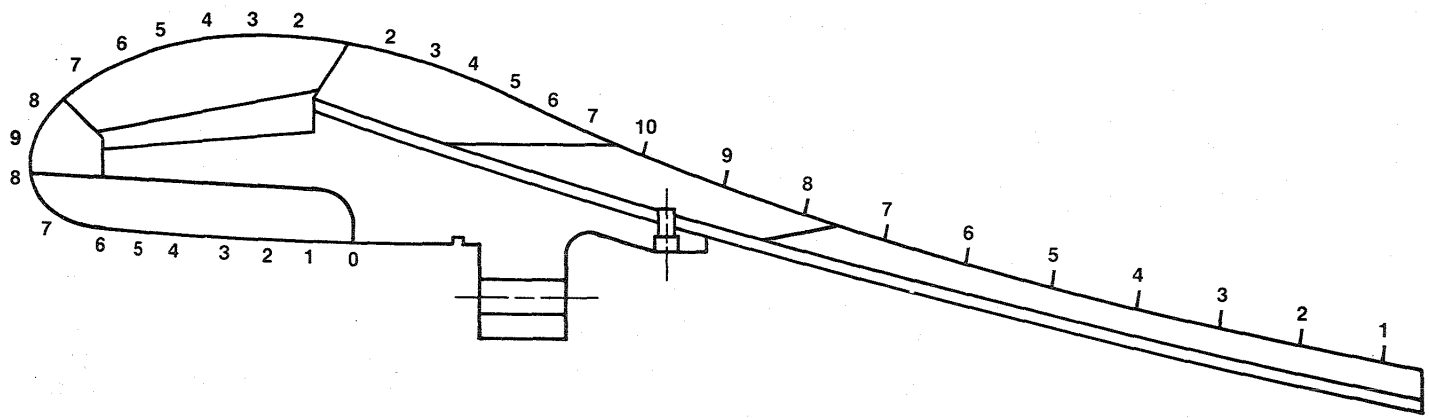

SHELL INSULATION					NOSE AND THROAT				
STATION	A/A*	ERODED DEPTH (IN.)	MATERIAL AFFECTED DEPTH (IN.)	EROSION RATE (MIL/SEC)	STATION	A/A*	ERODED DEPTH (IN.)	MATERIAL AFFECTED DEPTH (IN.)	EROSION RATE (MIL/SEC)
1	4.08	0.00	0.00	0.00	9	2.42	0.23	1.70	7.29
2	4.08	0.00	0.00	0.00	8	1.68	0.27	1.46	8.56
3	4.08	0.00	0.22	0.00	7	1.52	0.33	1.38	10.46
4	4.03	0.00	0.26	0.00	6	1.27	0.34	1.61	10.77
5	4.00	0.02	0.28	0.63	5	1.10	0.36	1.74	11.41
6	3.96	0.05	0.33	1.58	4	1.02	0.35	1.76	11.09
7	3.75	0.15	0.67	4.75	3	1.01	0.29	1.64	9.19
8	3.09	0.16	1.18	4.80	2	1.02	0.24	1.39	7.60

FORWARD EXIT CONE					CENTER AND AFT EXIT CONE				
STATION	A/A*	ERODED DEPTH (IN.)	MATERIAL AFFECTED DEPTH (IN.)	EROSION RATE (MIL/SEC)	STATION	A/A*	ERODED DEPTH (IN.)	MATERIAL AFFECTED DEPTH (IN.)	EROSION RATE (MIL/SEC)
2	1.10	0.16	0.64	5.16	10	2.63	0.00	0.30	0.00
3	1.29	0.12	0.68	3.74	9	3.00	0.00	0.27	0.00
4	1.44	0.06	0.64	1.90	8	3.47	0.00	0.26	0.00
5	1.67	0.01	0.58	0.32	7	3.98	0.03	0.28	0.95
6	1.90	0.01	0.56	0.32	6	4.33	0.00	0.24	0.00
7	2.14	0.00	0.56	0.00	5	4.96	0.03	0.25	0.95
					4	5.44	0.00	0.16	0.00
					3	5.88	0.00	0.22	0.00
					2	6.33	0.10	0.26	3.10
					1	6.76	0.03	0.29	0.95

Figure 20. N-3 Nozzle Average Erosion and Char Data

83086-6G

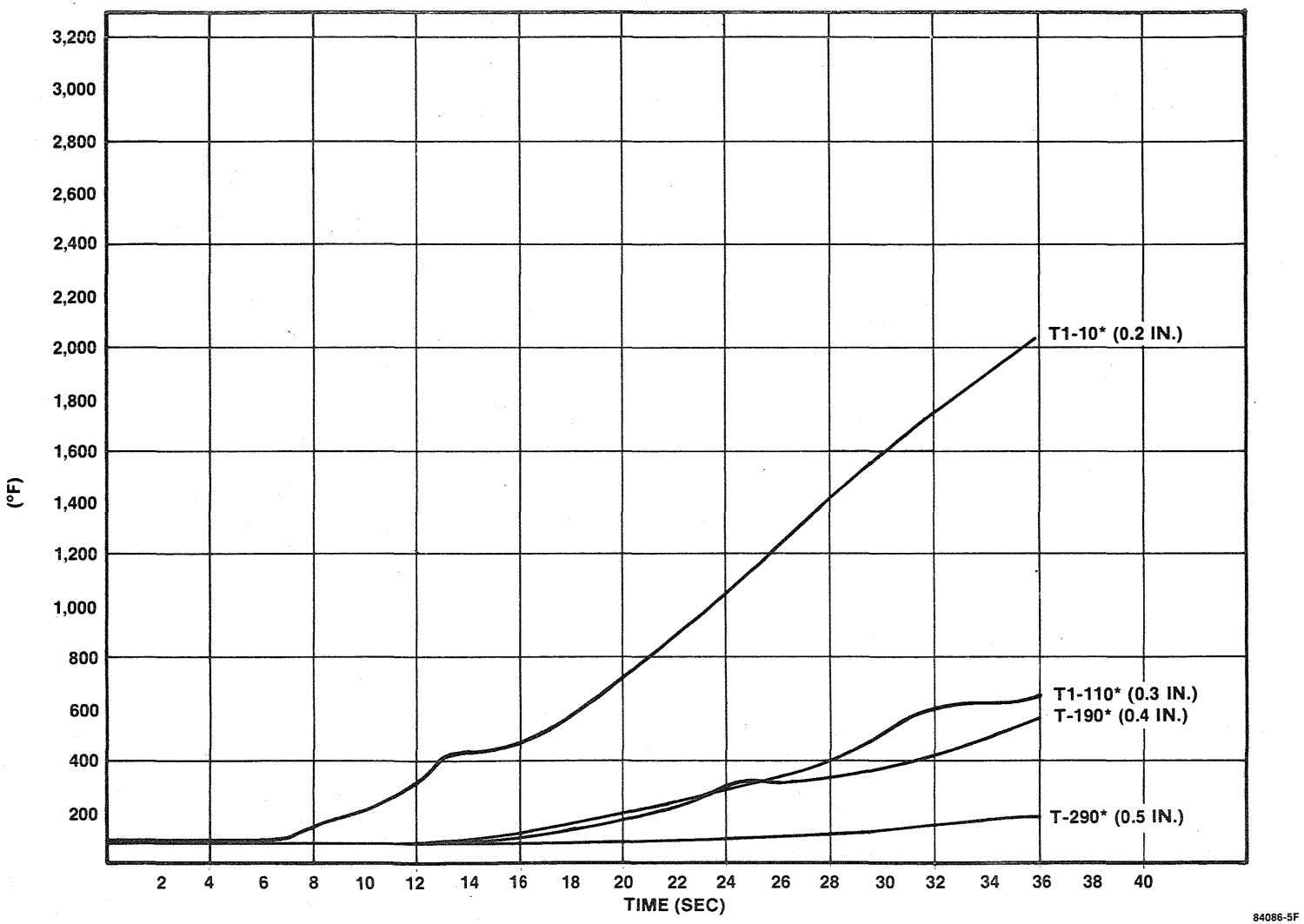

*DEPTH BELOW INITIAL FLOW SURFACE

Figure 21. N-3 Nozzle Thermocouple Data

5.0 DATA SUMMARY AND ANALYSIS

A comparison of the N-1, N-2, and N-3 nozzle erosion rates as a function of initial area ratio is presented in Figure 22. These data are based on average cross sectional measurements. The filled PAN, located in the shell insulator, forward, and center exit cones, eroded similar to the unfilled PAN on N-2, and less than the baseline materials in N-1. The low density PAN, located in the aft exit cone, eroded about the same as the baseline material; however, the data are somewhat questionable due to the material swelling and some localized spallation.

Figure 22 indicates that the pitch material eroded slightly more than the PAN and baseline materials in the nose and throat regions. However, diametrical measurements show that the pitch material eroded less in the throat area (8.65 mil/sec) than the spun PAN of N-2 (8.88 mil/sec) and the baseline rayon (10.18 mil/sec). A 15 percent decrease in throat erosion rate based on diametrical measurements was exhibited by pitch material over the N-1 carbon cloth phenolic.

Figure 23 summarizes the material char data which shows the pitch materials charring deeper than the rayon and PAN based materials. Char depths in spun PAN and filled/unfilled PAN materials are approximately 50 percent greater than baseline rayon material. The filled PAN charred about the same as the previously tested PAN and the low density PAN performed the same as both the baseline material and standard density PAN in the aft exit cone.

Figure 24 presents design thicknesses determined from the N-1, N-2, and N-3 tests required to meet SRM ablative material safety factor; i.e., 2 x erosion plus 1.25 char except at the aft exit cone where the requirement is 1.5 x erosion plus 1.0 char. Figure 25 shows the product of thickness and material density, a relative weight factor. The total thickness required and the product of density and thickness are parameters used to evaluate the relative performance of the new materials.

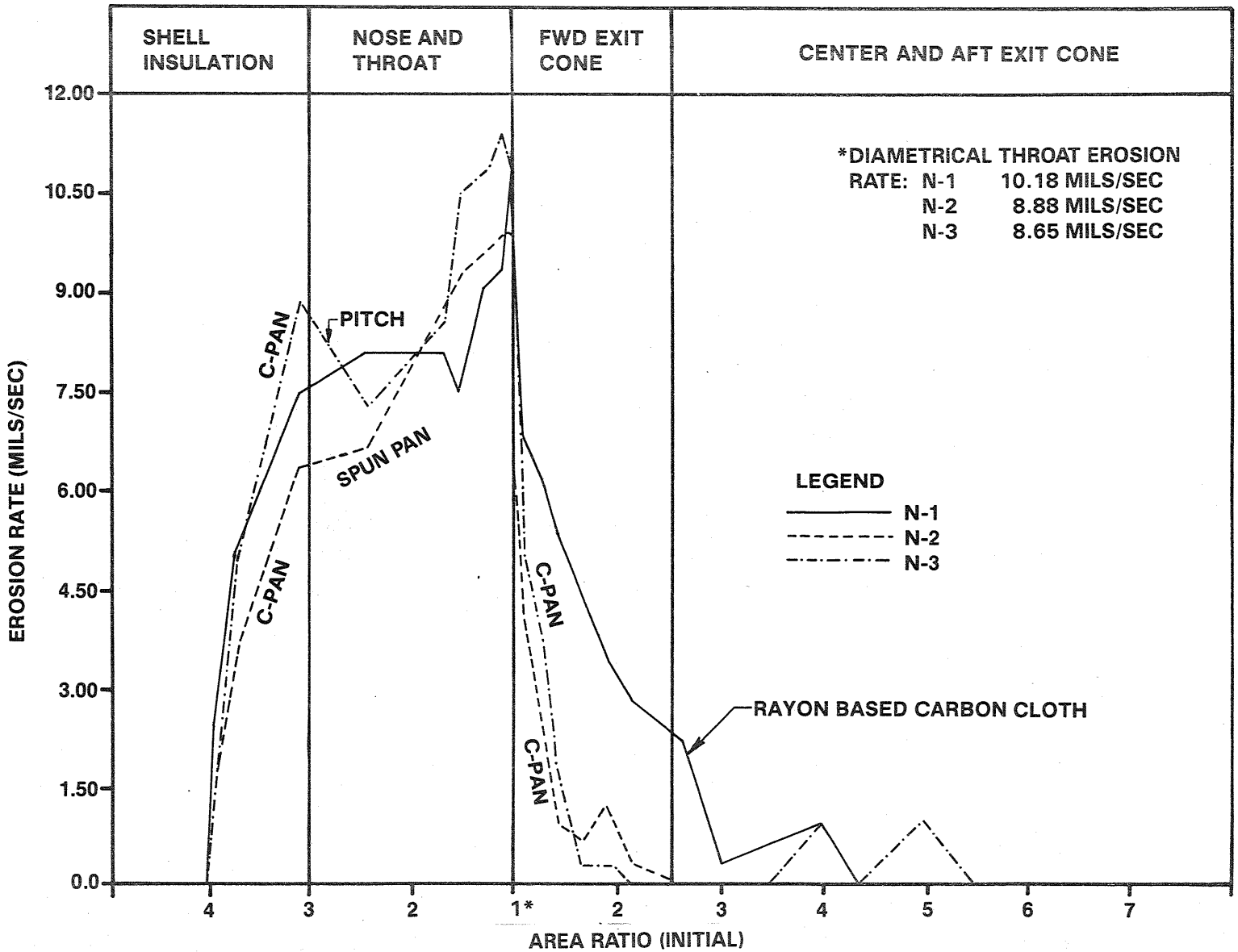

Figure 22. Erosion Rate vs Area Ratio Based on Nozzle Cross-Sections

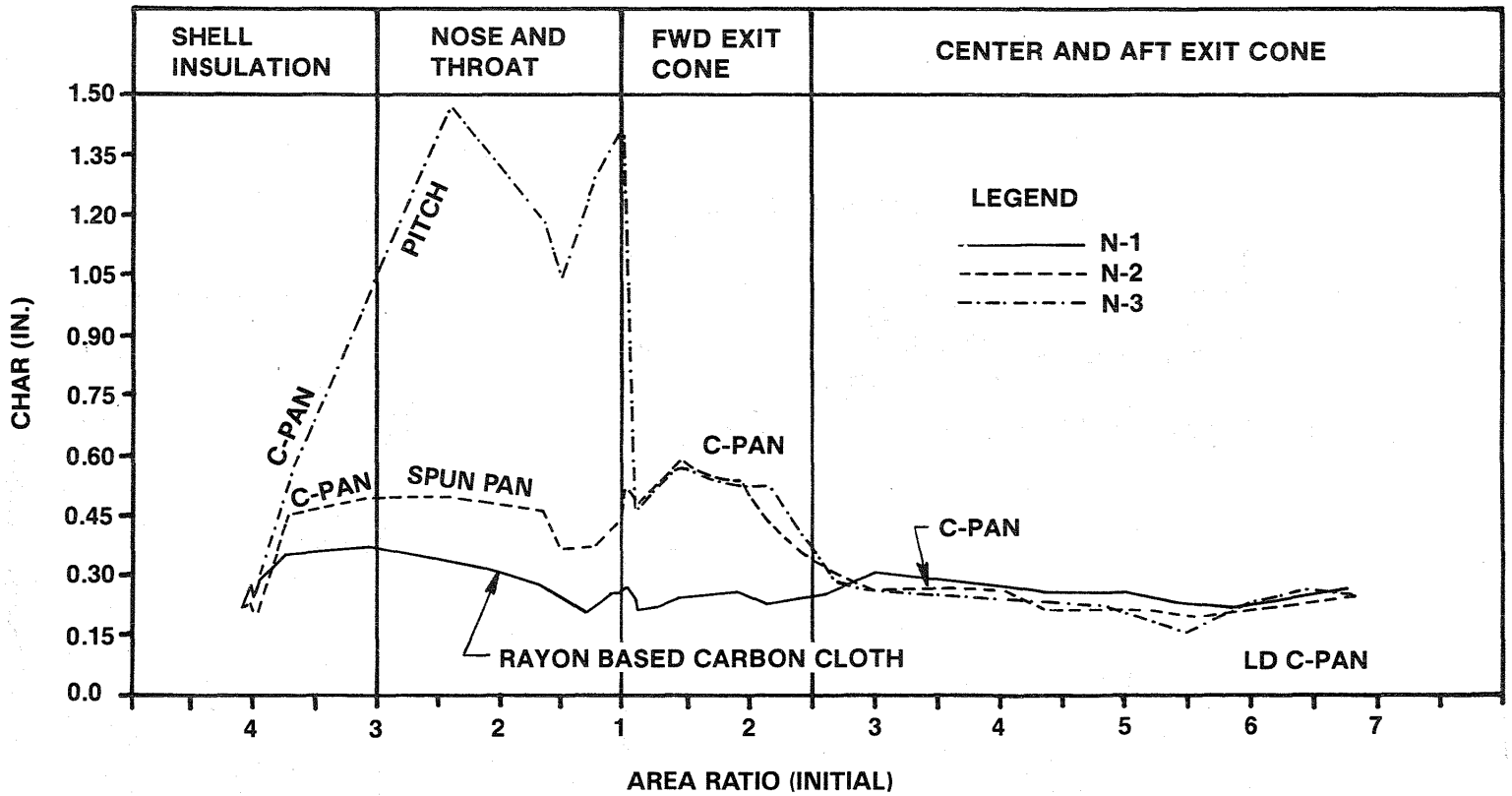

Figure 23. Char Depth vs Area Ratio Based on Nozzle Cross-Section

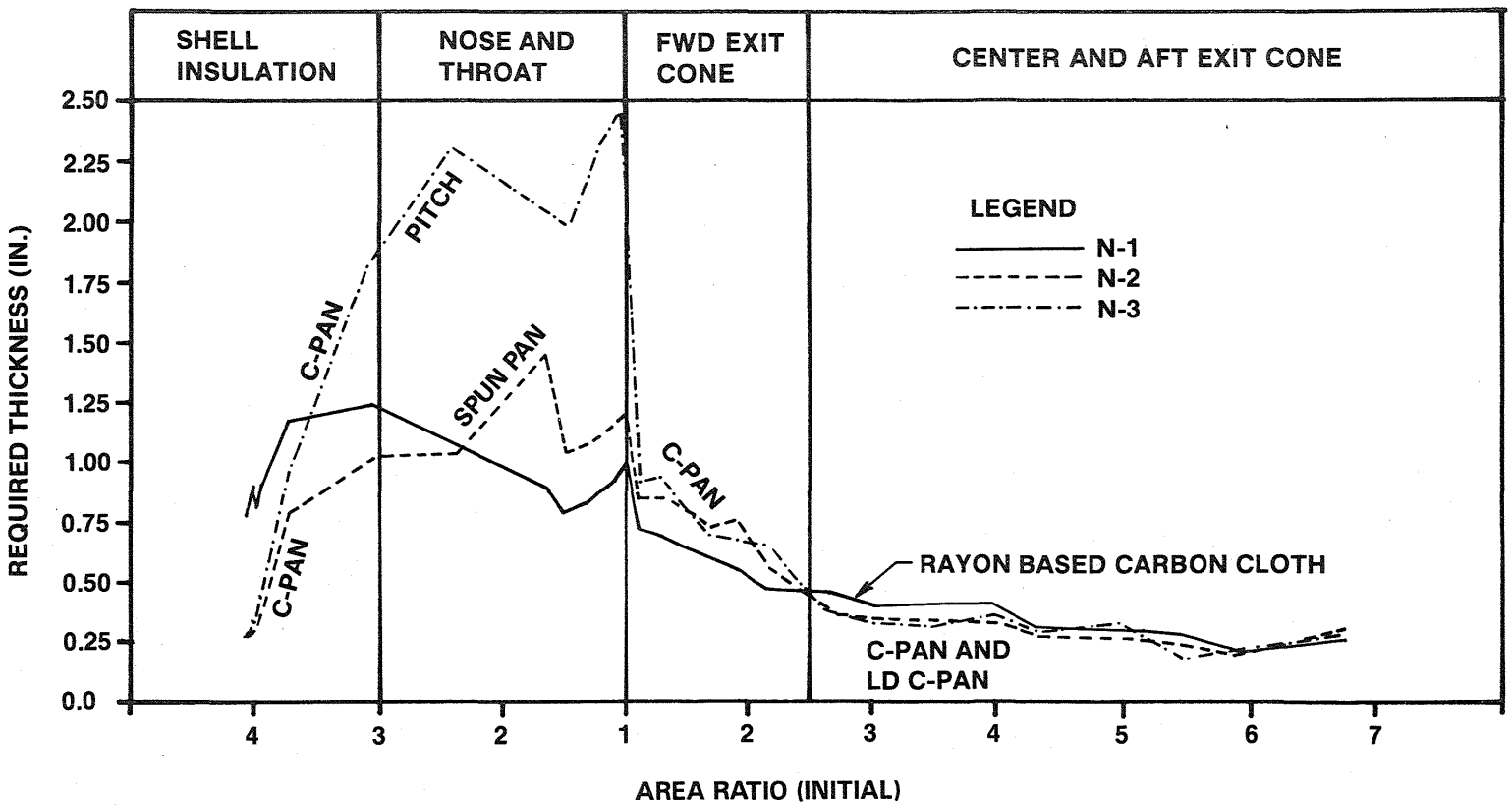

Figure 24. Required Thickness Comparisons

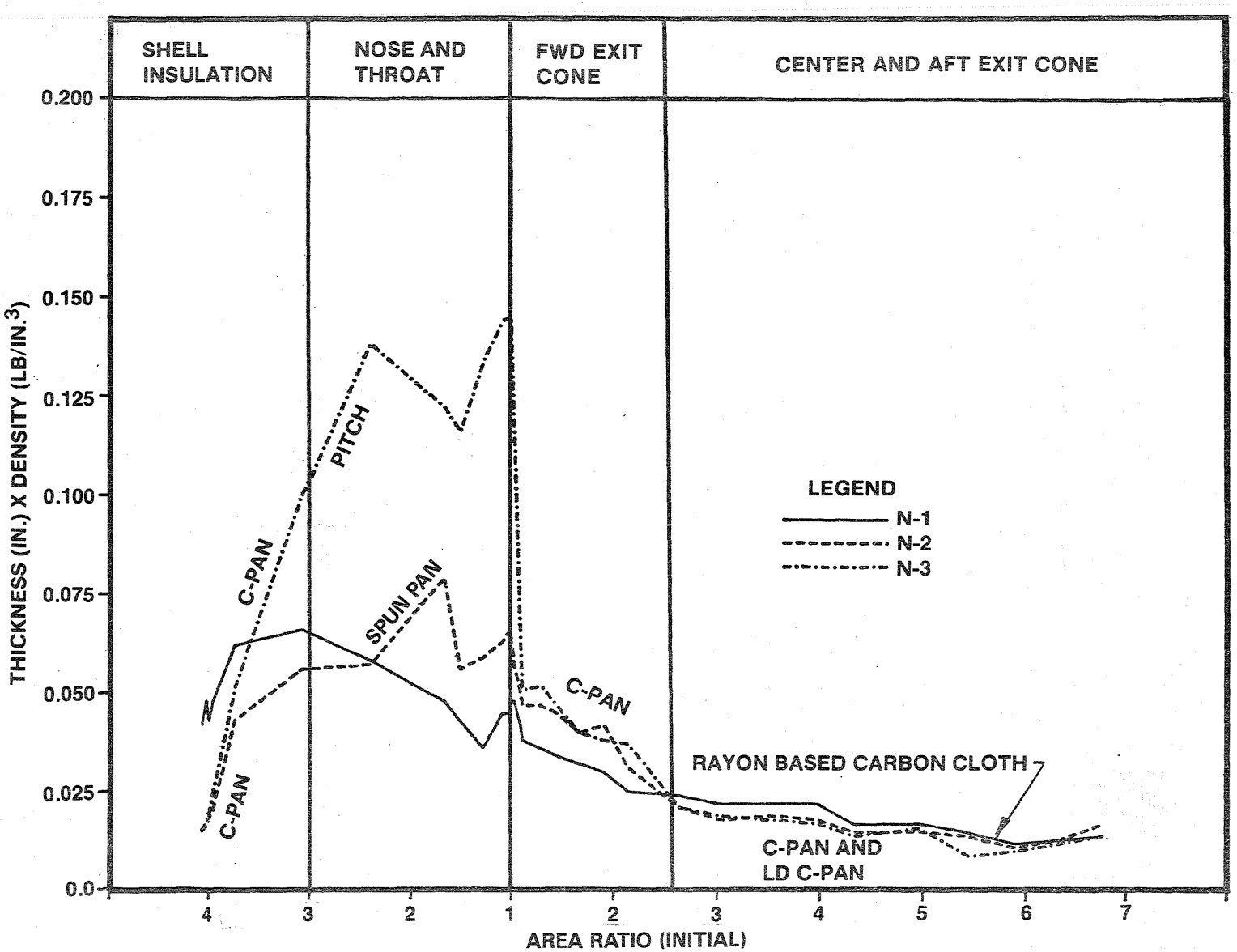

Figure 25. Thickness-Density Comparisons

6.0 CONCLUSIONS AND RECOMMENDATIONS

The PAN and pitch materials presented no fabrication problems and all components were considered of high quality. The pitch materials charred too deeply and are not suitable for use in the SRM nozzle. The filled PAN exhibited lower thermal conductivity than the unfilled PAN material. The low density PAN material performed very well, appears to be well suited for SRM use, and will be further evaluated in the N-4 nozzle test.

APPENDIX D

TEST NUMBER 4 STATIC TEST AND ANALYSIS REPORT

This Page Intentionally Left Blank

TWR-31475
REV B

Space Shuttle Alternate Nozzle Materials Program Static Test Report Test No. 4

1 November 1984

DR No. 5-3

Prepared for:

National Aeronautics and Space Administration
George C. Marshall Space Flight Center
Marshall Space Flight Center, Alabama 35812

Contract NAS8-30490

WBS 1.4.2.3.10

MORTON THIOKOL, INC.
Wasatch Division
P.O. Box 524, Brigham City, Utah 84302 (801) 863-3511

Publications No. 85297

This Page Intentionally Left Blank

SPACE SHUTTLE
ALTERNATE NOZZLE MATERIALS PROGRAM
STATIC TEST REPORT
TEST NO. 4

Prepared by:

Tim Crockford
Tim Crockford
Nozzle Design

Concurred by:

A. Canfield
A. Canfield
Manager, Nozzles and Controls Department

George Nichols
George Nichols
SRM Nozzle

CONTENTS

		Page
1.0	INTRODUCTION AND SUMMARY	1
2.0	TEST OBJECTIVES	2
3.0	DESIGN DESCRIPTION	3
4.0	POST-TEST DATA SUMMARY AND PERFORMANCE EVALUATION	16
4.1	Nozzle Post-Test Condition	16
4.2	Post-Test Erosion and Char Measurements	16
4.3	Thermocouple Data	32
5.0	DATA SUMMARY AND ANALYSES	39
6.0	CONCLUSIONS AND RECOMMENDATION	43

ILLUSTRATIONS

Figure		Page
1	Subscale Space Shuttle Nozzle Description	4
2	N-4 Nozzle Materials	5
3	N-4 Nozzle Thermocouple Locations	9
4	N-4 Nozzle Thermocouple Hole Depths	10
5	N-4 Nozzle Structural Analysis	12
6	N-4 Nozzle Thermal Analyses	13
7	N-4 Nozzle Pretest	14
8	N-4 Nozzle Nose Pretest	15
9	N-4 Nozzle Post-Test	17
10	N-4 Nozzle Throat Post-Test	18
11	N-4 Nozzle Throat Post-Test	19
12	N-4 Nozzle Throat Post-Test	20
13	N-4 Nozzle Nose Post-Test	21
14	N-4 Nozzle Nose Post-Test	22
15	N-4 Nozzle Nose Post-Test	23
16	N-4 Nozzle Shell Insulator Post-Test	24
17	N-4 Nozzle Shell Insulator Post-Test	25
18	N-4 Nozzle Exit Cone Overwrap Post-Test	26
19	N-4 Nozzle Exit Cone Post-Test	27
20	N-4 Nozzle Exit Cone Post-Test	28
21	N-4 Nozzle Exit Cone Post-Test	29
22	Test Motor Assembly	30
23	Motor Chamber Pressure	31
24	N-4 Nozzle Erosion and Char Profile	33
25	N-4 Nozzle Average Erosion and Char Data	34
26	N-4 Nozzle T1 Thermocouple Data	35
27	N-4 Nozzle T2 Thermocouple Data	36
28	N-4 Nozzle T3 Thermocouple Data	37

ILLUSTRATIONS (Cont)

Figure		Page
29	N-4 Nozzle T4 Thermocouple Data	38
30	Erosion Rate vs Area Ratio Based on Nozzle Cross Sections .	40
31	Average Throat Erosion Rate Comparison.	41
32	Material Affected Depth - Area Ratio Comparison.	42
33	Full-Scale SRM Alternate Materials Nozzle	44

TABLES

Table		Page
I	N-4 Nozzle Average Tag End Test Results	8

This Page Intentionally Left Blank

1.0 INTRODUCTION AND SUMMARY

The N-4 nozzle was tested on 17 August 1983 and was the fourth subscale alternate nozzle materials evaluation test. The design closely simulates the configuration and flow profile of the full-scale SRM nozzle.

The N-4 nozzle is the third nozzle using alternate materials for evaluation. Spun PAN materials were used in the shell insulator, nose, throat, and forward exit cone, and low density PAN materials were used in the aft exit cone. The throat insulation was glass mat phenolic. The exit cone overwrap was filament wound graphite epoxy.

Overall performance of the N-4 nozzle was good. Erosion was smooth and uniform.

Alternate materials can be used in the full-scale SRM nozzle, providing an additional 360 lb of payload capacity.

Due to risks associated with the introduction and qualification of new nozzle materials and the STS-8A nozzle erosion anomaly, it was decided not to incorporate the alternate materials in a full-scale nozzle at this time and no additional alternate materials tests are planned.

2.0 TEST OBJECTIVES

The objectives of this test were to:

1. Obtain performance characteristics of spun PAN materials, low density PAN materials, glass mat phenolic, and graphite epoxy overwrap in the sub-scale test motor.
2. Evaluate and compare performance of new materials to baseline materials under static test conditions.
3. Establish a data base for redesign and analysis of the full-scale Space Shuttle nozzle.

3.0 DESIGN DESCRIPTION

The nozzle is a fixed, partially submerged design consisting of a shell, shell insulator, nose ring, throat ring, and exit cone section. Overall geometry and contour simulate those of the full-scale SRM nozzle. The N-4 nozzle is shown in Figure 1.

Figure 2 shows the materials used in the N-4 nozzle. The shell insulation, nose, throat, and forward exit cone used spun PAN materials, the aft exit cone used low density PAN materials, the throat insulation used glass mat phenolic, and the exit cone overwrap used a graphite epoxy. The shell insulator nose and throat ring were hydroclave cured while the throat insulation, forward exit cone, aft exit cone, and exit cone overwrap were autoclave cured. The material specifics are:

Shell Insulator and Nose

Fiberite K411. This material is a phenolic resin impregnated balanced eight-harness satin weave fabric. The phenolic resin contains 5 to 15 percent by weight carbon powder filler, and the carbon fabric is a product of Stackpole Fibers Co., known as Panex® SWB-8. The fabric is woven from Panex 30Y/800d carbon yarn, which is made by spinning PAN filaments prior to being carbonized. The carbon filaments contain 99 percent carbon, by weight, and have a 38 x 10^6 psi tensile modulus.

Throat

Fiberite K411A. This material is a phenolic resin impregnated balanced eight-harness satin weave fabric. The phenolic resin contains 10 to 18 percent by weight carbon powder filler, and the carbon fabric is a product of Polycarbon Incorporated, designated as PCSA. The fabric is woven from carbon yarn, which is made by spinning PAN filaments prior to being carbonized. The carbon filaments contain 99 percent carbon, by weight, and have a 38 x 10^6 psi tensile modulus.

U.S. Polymeric FM 5834. This material is a phenolic resin impregnated balanced eight-harness satin weave fabric. The phenolic resin contains 13 to 18 percent by weight carbon powder filler, and the carbon fabric is a product of Stackpole Fibers Co., known as Panex® SWB-8. The fabric is woven from Panex 30Y/800d carbon yarn, which is made by spinning PAN filaments

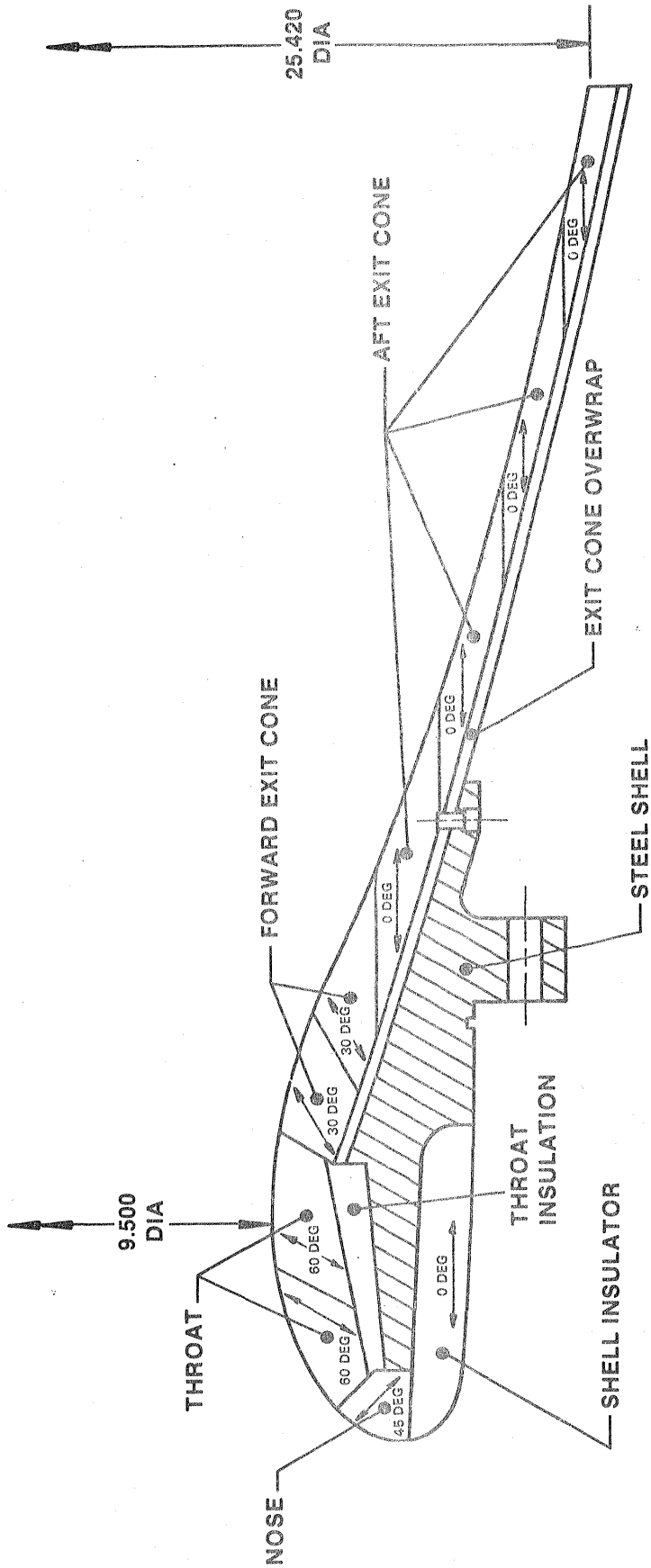

Figure 1. Subscale Space Shuttle Nozzle Description (N-4 Nozzle)

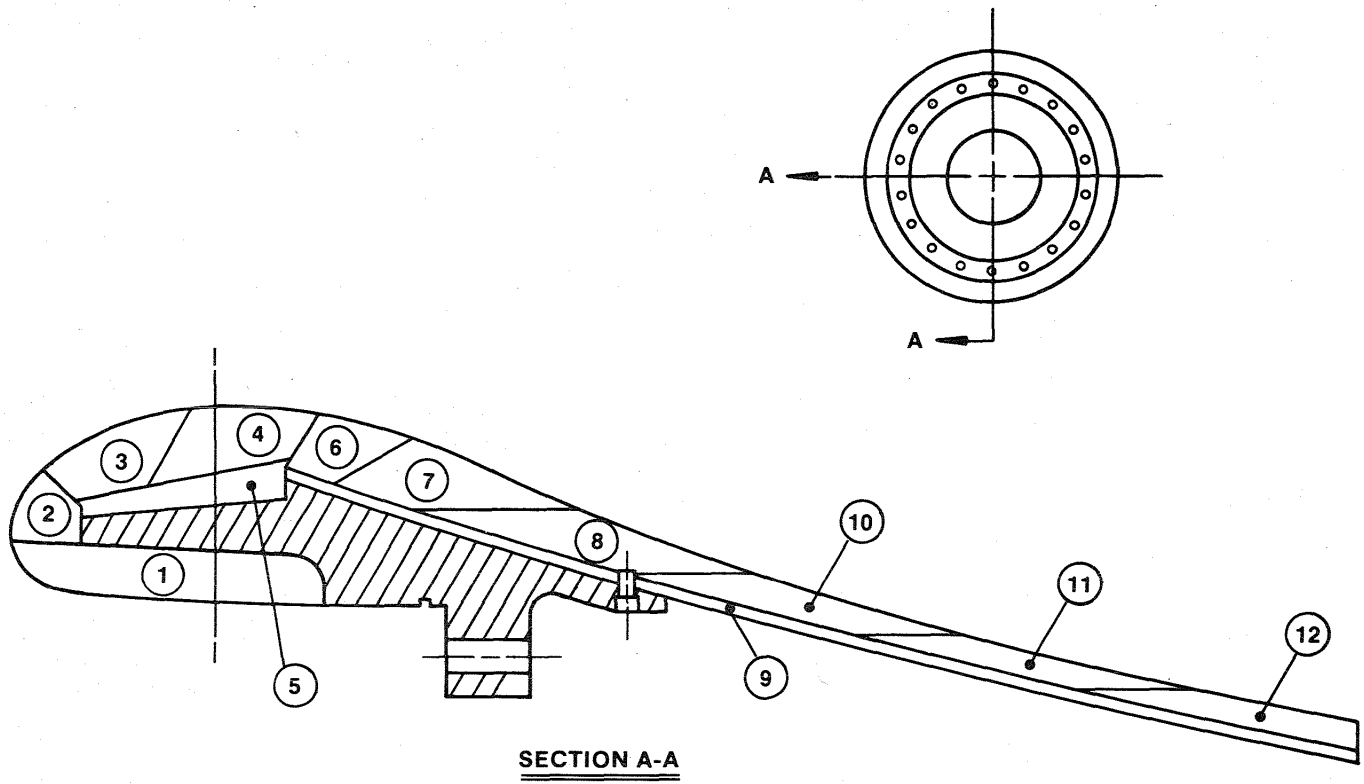

1	2	3	4	5	6	7	8	9	10	11	12
K411 SPUN PAN STACKPOLE	K411 SPUN PAN STACKPOLE	K411A SPUN PAN POLYCARB	FM5834 SPUN PAN STACKPOLE	MX4968 LD MAT "E" GLASS	FM5834A SPUN PAN POLYCARB	K411 SPUN PAN STACKPOLE	MX134LD LD PAN (3K) PLAIN WVE	FX425B21 GRPH EPXY AS4/982	FM5908 LD PAN (6K) LENO WVE	MX4967 LD PAN (6K) LENO WVE	FM5908A LD PAN (3K) PLAIN WVE

Figure 2. Subscale Space Shuttle Nozzle Material Test Matrix (N-4 Nozzle)

prior to being carbonized. The carbon filaments contain 99 percent carbon, by weight, and have a 38 x 10^6 tensile modulus.

Throat Insulation

Fiberite MX 4968. This material is a phenolic resin impregnated E-Glass fiber mat with a cured density of 1.0 to 1.1 g/cm^3. The phenolic resin contains no fillers.

Forward Exit Cone

U.S. Polymeric FM 5834A. This material is a phenolic resin impregnated balanced eight-harness satin weave fabric. The phenolic resin contains 13 to 18 percent by weight, carbon powder filler, and the carbon fabric is a product of Polycarbon Incorporated, designated as PCSA. The fabric is woven from carbon yarn, which is made by spinning PAN filaments prior to carbonizing. The carbon filaments contain 99 percent carbon, by weight, and have a 38 x 10^5 psi tensile modulus.

Fiberite K411. (Same as Shell Insulator and Nose)

Aft Exit Cone

Fiberite MX 134LD. This material is a phenolic resin impregnated open plain weave fabric. The cured material has a low density of 1.0 to 1.30 g/cm^3. The 37 to 44 percent, by weight, butadiene-acrylonitrile modified phenolic resin contains 10 to 13 percent, by weight, carbon microballoon filler, and the fabric is woven with Union Carbide Corporation Thornel® T-300 grade WYP 30-1/0 carbon yarn. The yarn contains 3,000 filaments made by carbonizing PAN continuous filament. The carbon filaments contain 92 percent carbon, by weight, and have a 33 x 10^6 psi tensile modulus.

U.S. Polymeric FM 5908. This material is a phenolic resin impregnated mock leno weave (an open weave with intersections that draw a group of warp and fill yarns together). The cured material has a low density of 1.0 to 1.3 g/cm^3. The phenolic resin contains 10 percent by weight carbon microballoon filler, and the fabric is woven with three bundles of Hitco Hitex® carbon yarn. The yarn contains 6,000 filaments made by carbonizing PAN continuous filaments. The carbon filaments contain 94 percent carbon, by weight, and have a 33 x 10^6 psi tensile modulus.

Fiberite MX 4967. This material is a phenolic resin impregnated mock leno weave (an open weave with intersections that draw a group of warp and fill yarns together). The cured material has a low density of 1.0 to 1.3 g/cm^3. The phenolic resin contains 9 to 13 percent, by weight, carbon microballoon filler and the fabric is woven with bundles of three Celanese Corporation Celion® carbon yarns. The yarn contains 6,000 filaments made by carbonizing PAN continuous filament. The carbon filaments contain 93 percent, by weight, carbon and have a 34×10^6 psi tensile modulus.

U.S. Polymeric FM 5908A. This material is a phenolic resin impregnated open plain weave fabric. The cured material has a low density of 1.0 to 1.3 g/cm^3. The 38 to 44 percent, by weight, butadiene-acrylonitrile modified phenolic resin contains 8 to 12 percent, by weight, carbon microballoon filler, and the fabric is woven with Hitco Hitex® carbon yarn. The yarn contains 3,000 filaments made by carbonizing PAN continuous filament. The carbon filaments contain 94 percent carbon, by weight, and have a 33×10^6 psi tensile modulus.

Exit Cone Overwrap

Fiberite FX 425B21. This material is an epoxy imnpregnated high modulus graphite Hercules Incorporated AS-4 12,000 filament yarn that is made using a PAN continuous fiber precursor. The resin is a Fiberite Corporation 982 epoxy resin. The cured density is 1.55 g/cm^3. The graphitized filaments contain 94 percent carbon, by weight, and have a 34×10^6 psi tensile modulus.

Specimens were taken from each ablative and insulative component and tested for residual volatiles, resin content, specific gravity, and compressive strength. The results presented in Table I are the average results from three tests.

Figures 3 and 4 show the thermocouple locations and required/measured hole depths. Sixteen thermocouple probes were located in the exit cone--4 each at depths of 0.2, 0.3, 0.4, and 0.5 in. at expansion ratios of 2.0, 3.3, 5.0, and 6.2.

TABLE 1

SUBSCALE SPACE SHUTTLE NOZZLE
AVERAGE TAG END TEST RESULTS
(N-4 NOZZLE)

	Residual Volatiles (%)	Resin Content (%)	Specific Gravity	Compressive Strength (psi)
Shell Insulator	1.81	35.51	1.53	18,931
Nose	2.04	33.55	1.52	20,561
Throat				
Forward	1.64	34.15	1.53	21,795
Aft	2.50	32.79	1.52	21,105
Throat Insulation	0.39	61.82	1.06	10,465
Forward Exit Cone				
Forward	1.83	37.61	1.51	22,474
Aft	2.24	32.70	1.53	17,387
Aft Exit Cone				
Forward	2.99	36.45	1.30	28,779
Forward Middle	2.59	46.38*	1.21	17,120
Aft Middle	1.23	42.73*	1.23	14,435
Aft	1.07	41.18	1.32	41,857

*Based on a K-Factor of 1.66

	Fiber Volume(%)	Resin Weight(%)	Void Volume(%)	Short Beam Shear
Exit Cone Overwrap	59	32.3	0.75	8,947 psi (polar)

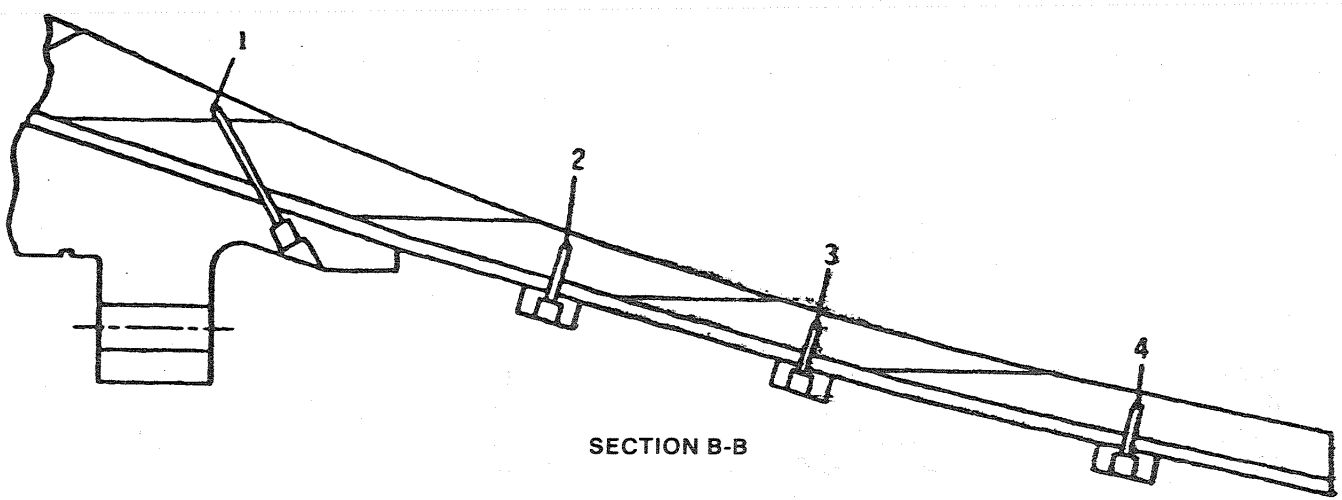

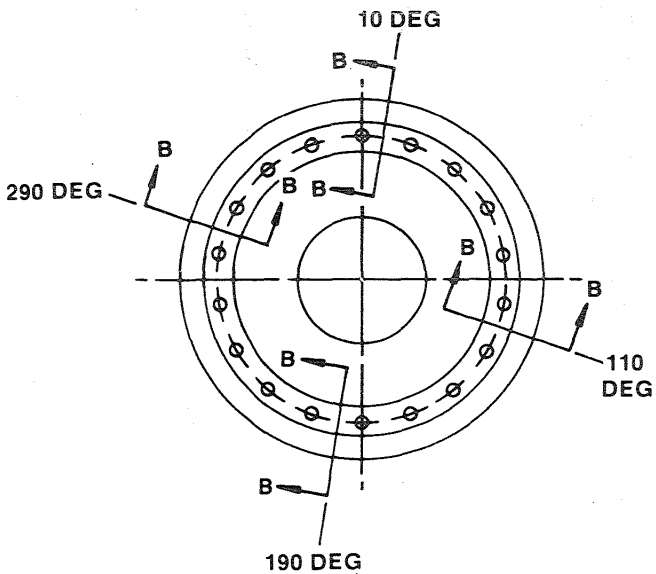

STATION	PLANE (DEG)	DEPTH BELOW FLOW CONTOUR (IN.)	THERMOCOUPLE TYPE
1	10	0.2	W 5% RE/W 26% RE
2	10	0.2	W 5% RE/W 26% RE
3	10	0.2	W 5% RE/W 26% RE
4	10	0.2	W 5% RE/W 26% RE
1	110	0.3	W 5% RE/W 26% RE
2	110	0.3	W 5% RE/W 26% RE
3	110	0.3	CHROMEL/ALUMEL
4	110	0.3	CHROMEL/ALUMEL
1	190	0.4	CHROMEL/ALUMEL
2	190	0.4	CHROMEL/ALUMEL
3	190	0.4	CHROMEL/ALUMEL
4	190	0.4	CHROMEL/ALUMEL
1	290	0.5	CHROMEL/ALUMEL
2	290	0.5	CHROMEL/ALUMEL
3	290	0.5	CHROMEL/ALUMEL
4	290	0.5	CHROMEL/ALUMEL

Figure 3. Test N-4 Nozzle Instrumentation, Thermocouple Locations

84440-6E

STATION	PLANE (DEG)	REQUIRED DEPTH	MEASURED DEPTH
1	10	2.900 ± 0.010	2.900
2	10	0.200 ± 0.010	0.195
3	10	0.200 ± 0.010	0.195
4	10	0.200 ± 0.010	0.195
1	110	2.800 ± 0.010	2.800
2	110	0.300 ± 0.010	0.290
3	110	0.300 ± 0.010	0.297
4	110	0.300 ± 0.010	0.302
1	190	2.600 ± 0.010	2.600
2	190	0.400 ± 0.010	0.400
3	190	0.400 ± 0.010	0.397
4	190	0.400 ± 0.010	0.399
1	290	2.400 ± 0.010	2.400
2	290	0.500 ± 0.010	0.492
3	290	0.500 ± 0.010	0.503
4	290	0.500 ± 0.010	0.499

Figure 4. Subscale Space Shuttle Nozzle Thermocouple Hole Depths (N-4 Nozzle)

Figure 5 presents the results of the 1-D structural analyses of the N-4 nozzle. All components show positive margins of safety using a 1.40 factor of safety.

Figure 6 presents predicted erosion and material affected depth at selected locations. The maximum predicted backside temperature is 200°F and occurs in the aft exit cone region.

The prefire throat diameter was 9.503 in. and finished nozzle weight was 517.3 lb. Figures 7 and 8 present prefire photographs of the nozzle.

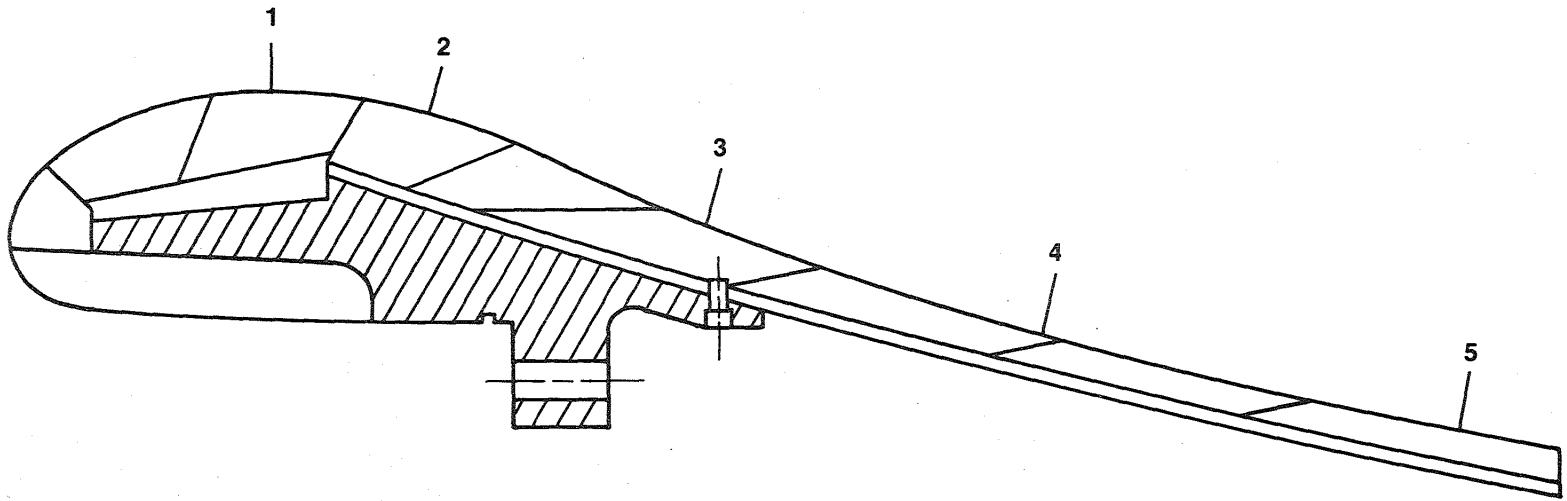

ANALYSIS POINT**	MATERIAL	STRESS TYPE	STRESS	ALLOWABLE STRESS	MS*
1	SPUN PAN	WITH PLY	-1,899	-14,500	4.45
2	SPUN PAN	WITH PLY	-1,407	-9,500	3.82
3	LIGHTWEIGHT PAN	WITH PLY	-2,143	-13,000	3.33
4	LIGHTWEIGHT PAN	WITH PLY	-2,074	-10,000	2.44
5	LIGHTWEIGHT PAN	WITH PLY	-1,713	-16,500	5.88

$$*MS = \frac{\text{ALLOWABLE STRESS}}{1.4 \times \text{STRESS}} - 1 \text{ WHERE FACTOR OF SAFETY} = 1.4$$

**ALL ANALYSES WERE CONDUCTED AT 32 SECONDS INTO THE BURN AND MEOP = 830 PSIA

Figure 5. Subscale Space Shuttle Nozzle Structural Analysis (N-4 Nozzle)

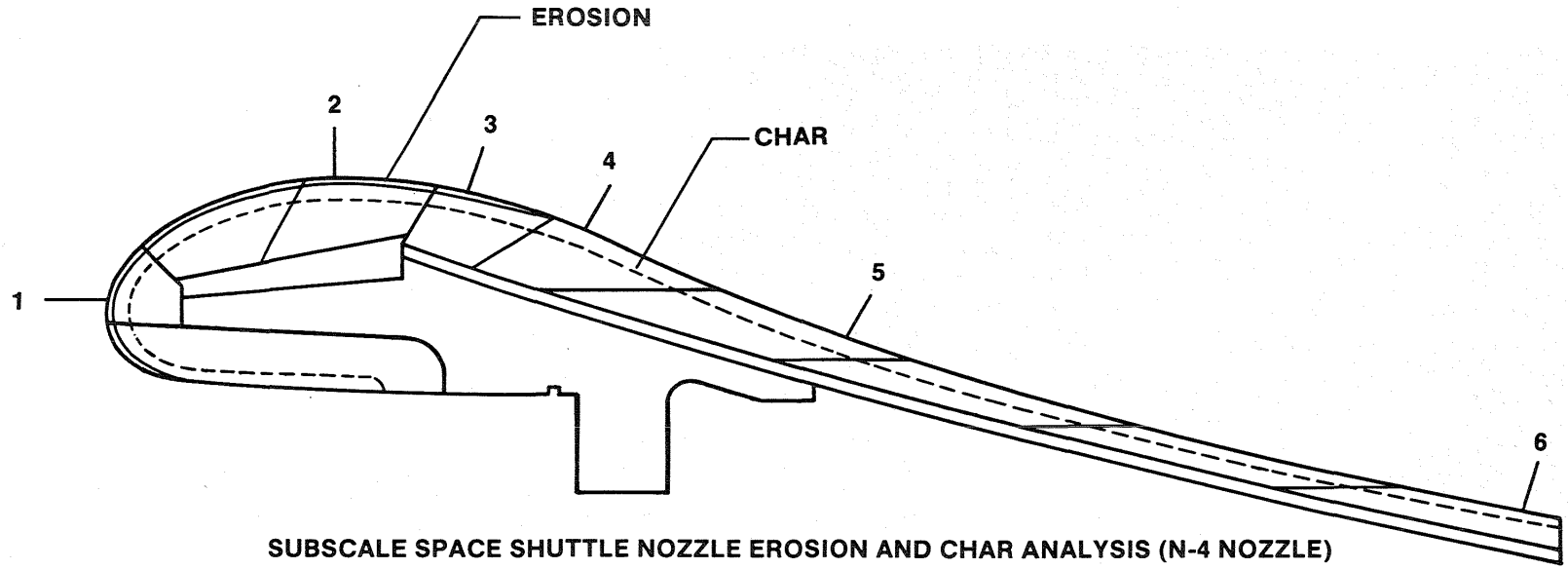

SUBSCALE SPACE SHUTTLE NOZZLE EROSION AND CHAR ANALYSIS (N-4 NOZZLE)

STATION	EXPANSION RATIO (A/A*)	THICKNESS (IN.)	EROSION DEPTH (IN.)	EROSION RATE (MILS/SEC)	MATERIAL (1) AFFECTED DEPTH (IN.)	MATERIAL AFFECTED RATE (MIL/SEC)	LINER BACK FACE TEMPERATURE (°F)
1	-2.84	1.75	0.20	6.5	0.51	16.5	76
2	1.00	1.75	0.27	8.7	0.53	17.1	70
3	1.14	1.62	0.18	5.9	0.54	17.4	70
4	1.48	1.62	0.05	1.5	0.59	19.0	70
5	3.11	1.06	0	0	0.27	8.7	70
6	7.05	0.70	0.03	1.0	0.25	8.1	200

(1) CHAR AND EROSION BASED ON:

(a) N-2 NOZZLE (STATIONS 1 AND 2)
(b) N-2 AND N-3 NOZZLES (STATIONS 3 AND 4)
(c) N-3 NOZZLE (STATIONS 5 AND 6)

Figure 6. Thermal Analysis

84440-6C

Figure 7. N-4 Nozzle Pretest

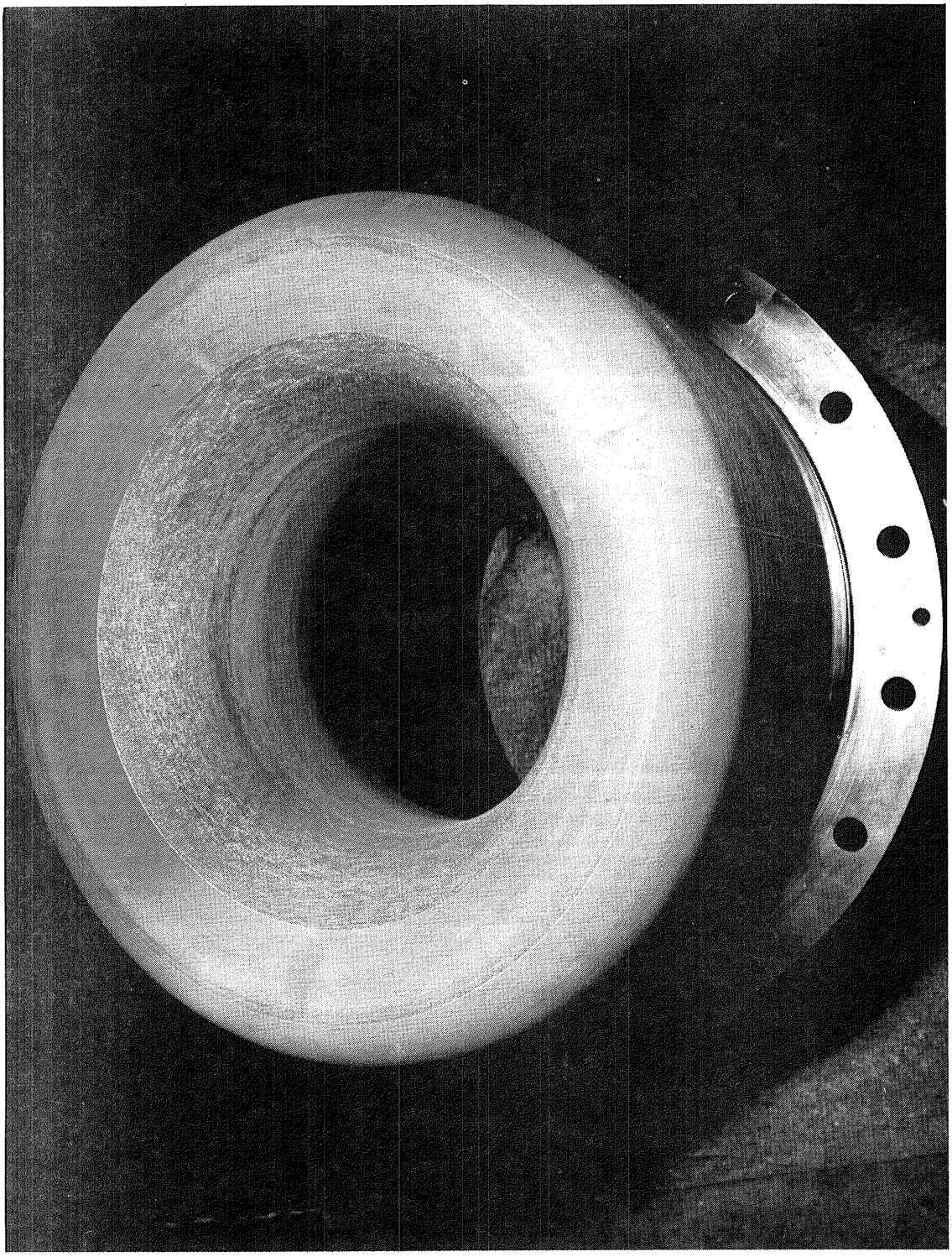

Figure 8. N-4 Nozzle Nose Pretest

4.0 POST-TEST DATA SUMMARY AND PERFORMANCE EVALUATION

4.1 NOZZLE POST-TEST CONDITION

The nozzle was in good post-test condition. No major anomalies were observed. The nose, throat, and forward exit cone showed excellent integrity with very even erosion and char profiles.

The shell insulator had one delamination at the forward tip and several areas of swelling of charred plies around the outside diameter.

The nose and throat sections showed no signs of anomalies. Overall erosion was less than, and overall char was slightly higher than, the N-1 nozzle.

The glass mat throat insulator was completely intact and unaffected.

The forward exit cone sections showed lower overall erosion and higher overall char than the N-1 nozzle.

Aft exit cone sections performed similar to past tests. Erosion was very smooth and uniform. The last aft section of test material showed some lifting of plies.

The graphite epoxy overwrap on the exit cone liner was totally intact and unaffected by the internal or external environments.

The metal housing showed no indication of damage. The post-test condition of the plastics is shown in Figures 9 through 21.

Figure 22 shows the JPL test motor and Figure 23 presents the pressure-time trace for the N-4 motor. The average web burn pressure was 654.4 psi and the web time was 32.42 sec.

4.2 POST-TEST EROSION AND CHAR MEASUREMENTS

Erosion rates were calculated using average web burn time. Measured throat erosion rates were calculated using one-half of the average difference of six prefire and postfire diametrical throat measurements. Erosion at other locations was recorded using measurements taken from the cross sectioned nozzle. Char thickness was obtained by direct measurement taken on the sectioned nozzle components.

Figure 9. N-4 Nozzle Post-Test

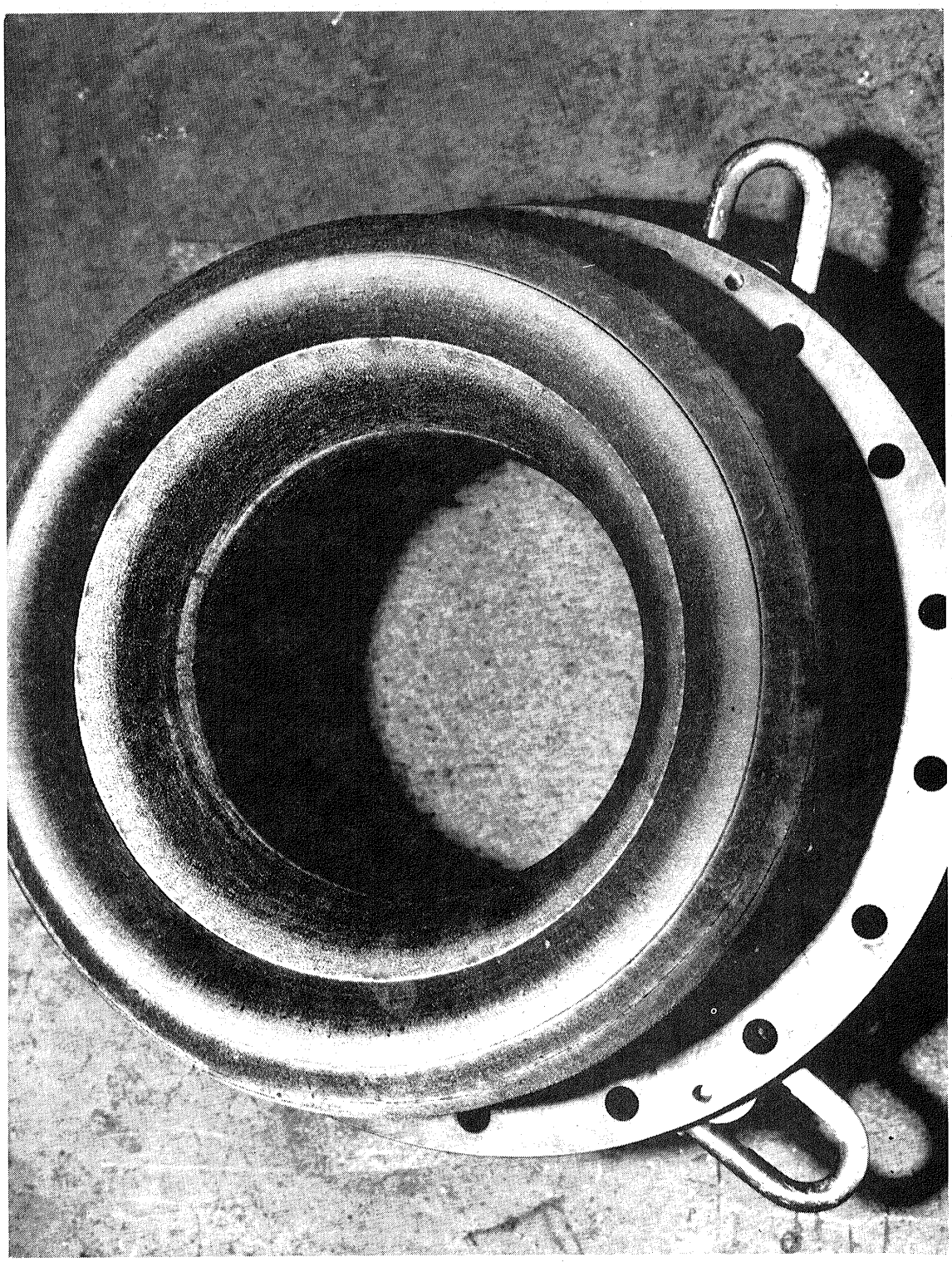

Figure 10. N-4 Nozzle Throat Post-Test

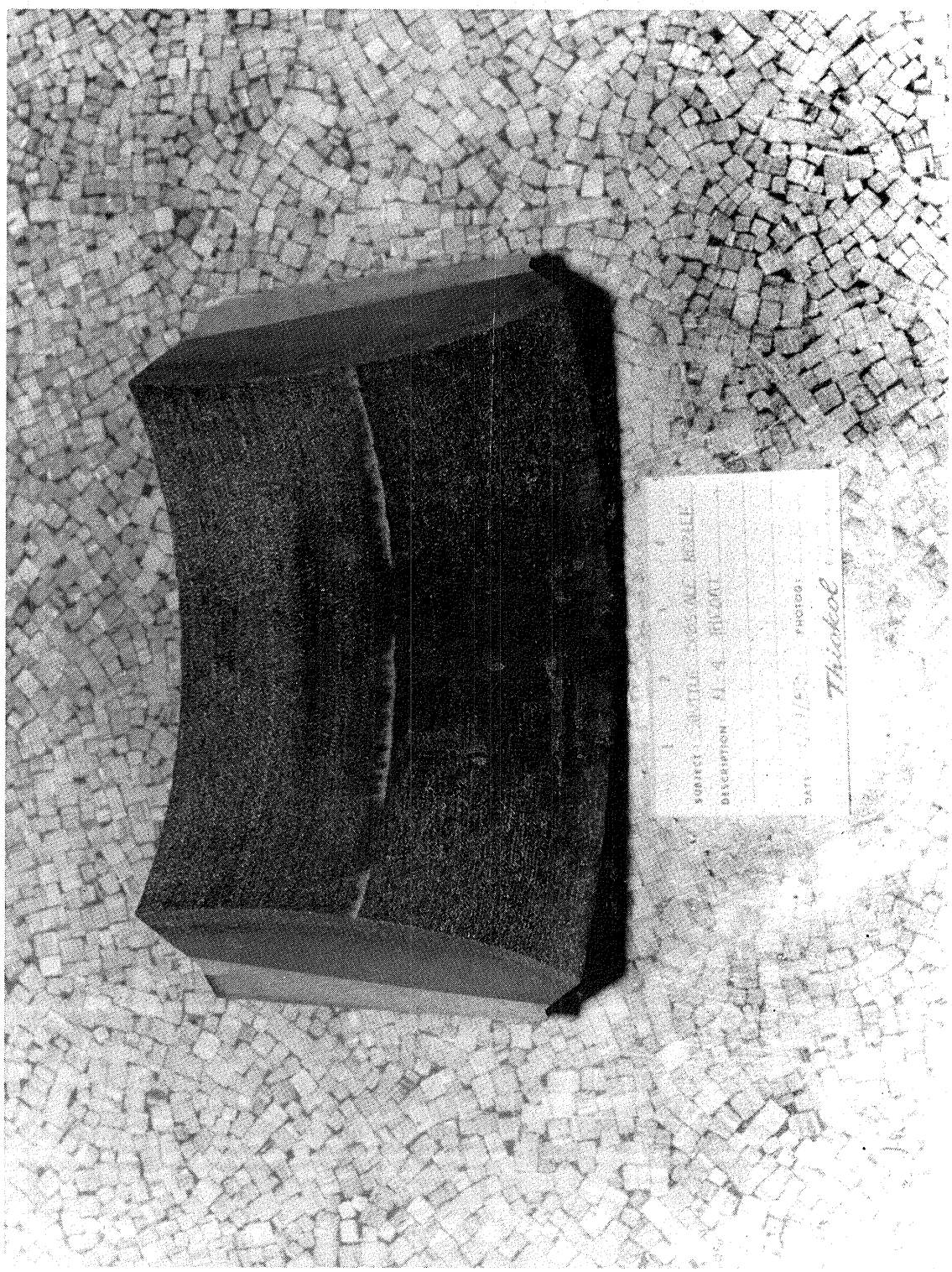

Figure 11. N-4 Nozzle Throat Post-Test

Figure 12. N-4 Nozzle Throat Post-Test

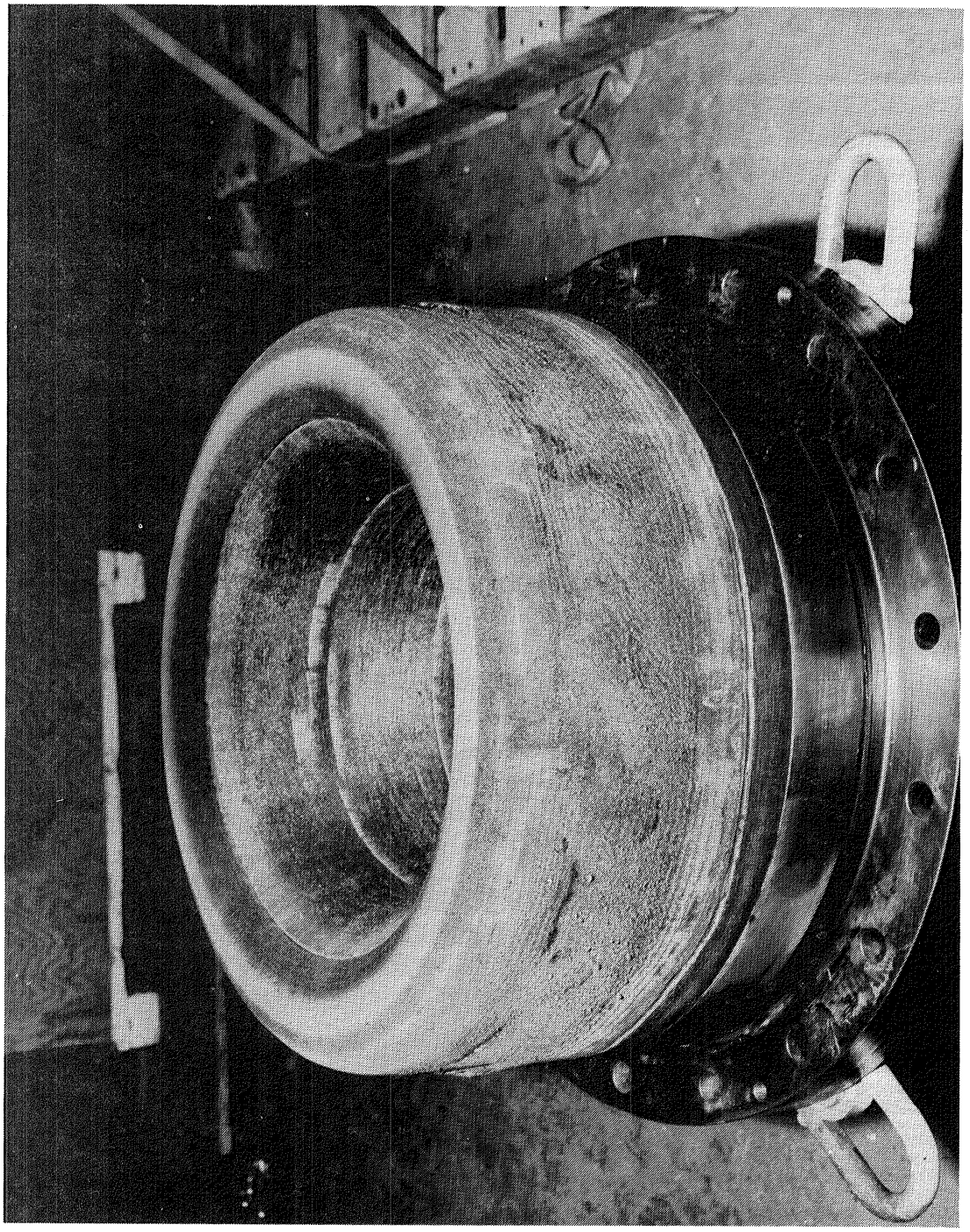

Figure 13. N-4 Nozzle Nose Post-Test

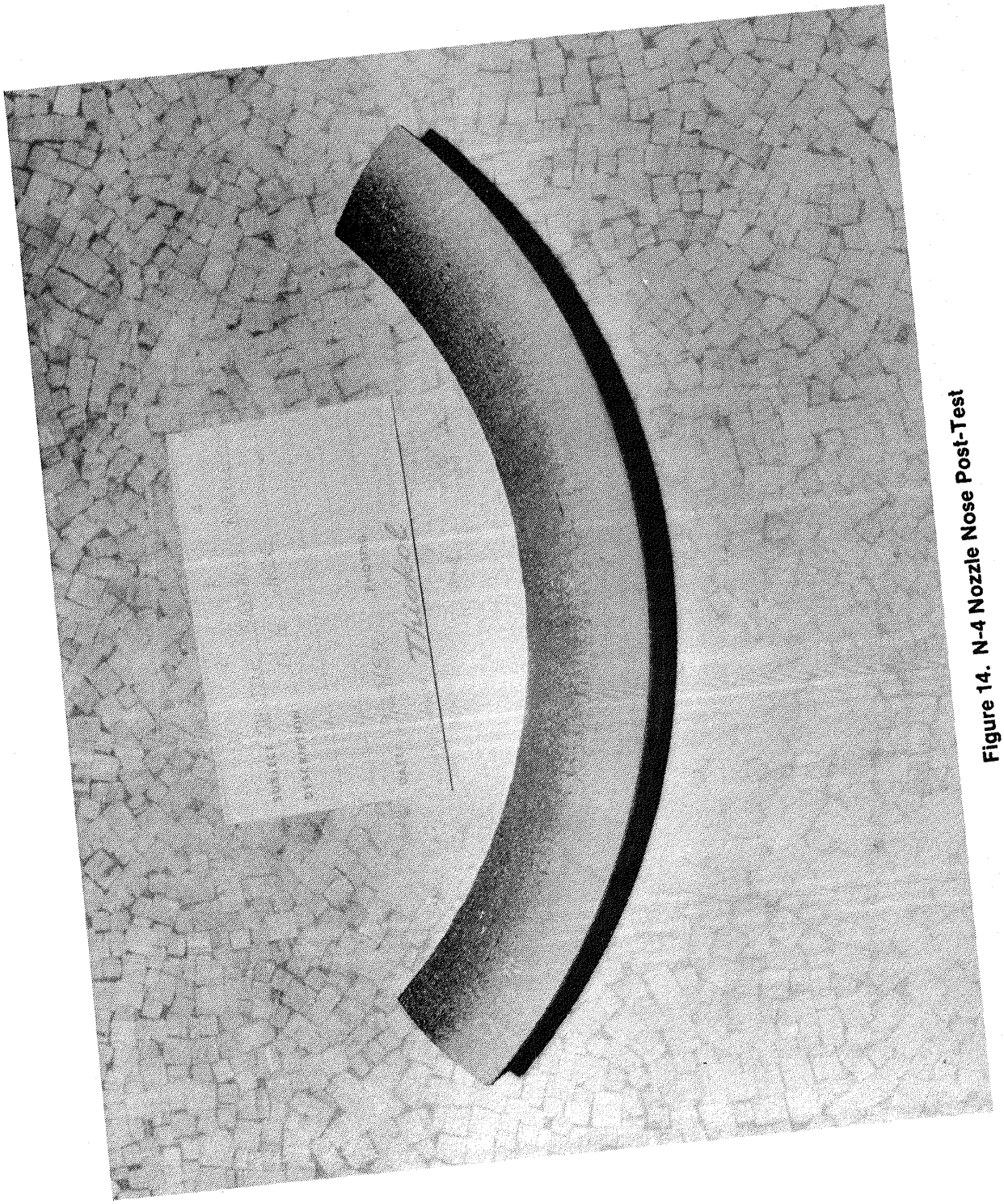

Figure 14. N-4 Nozzle Nose Post-Test

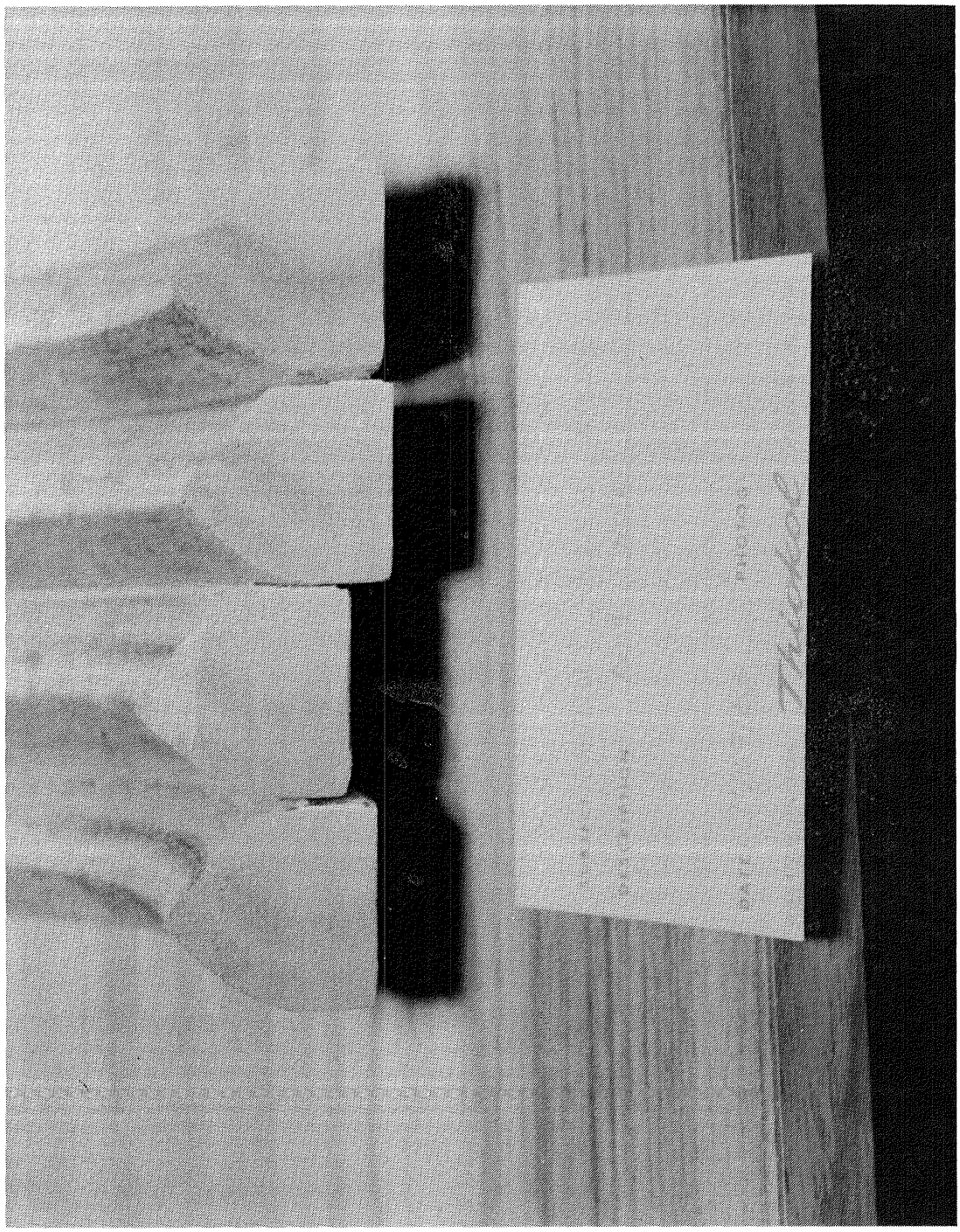

Figure 15. N-4 Nozzle Nose Post-Test

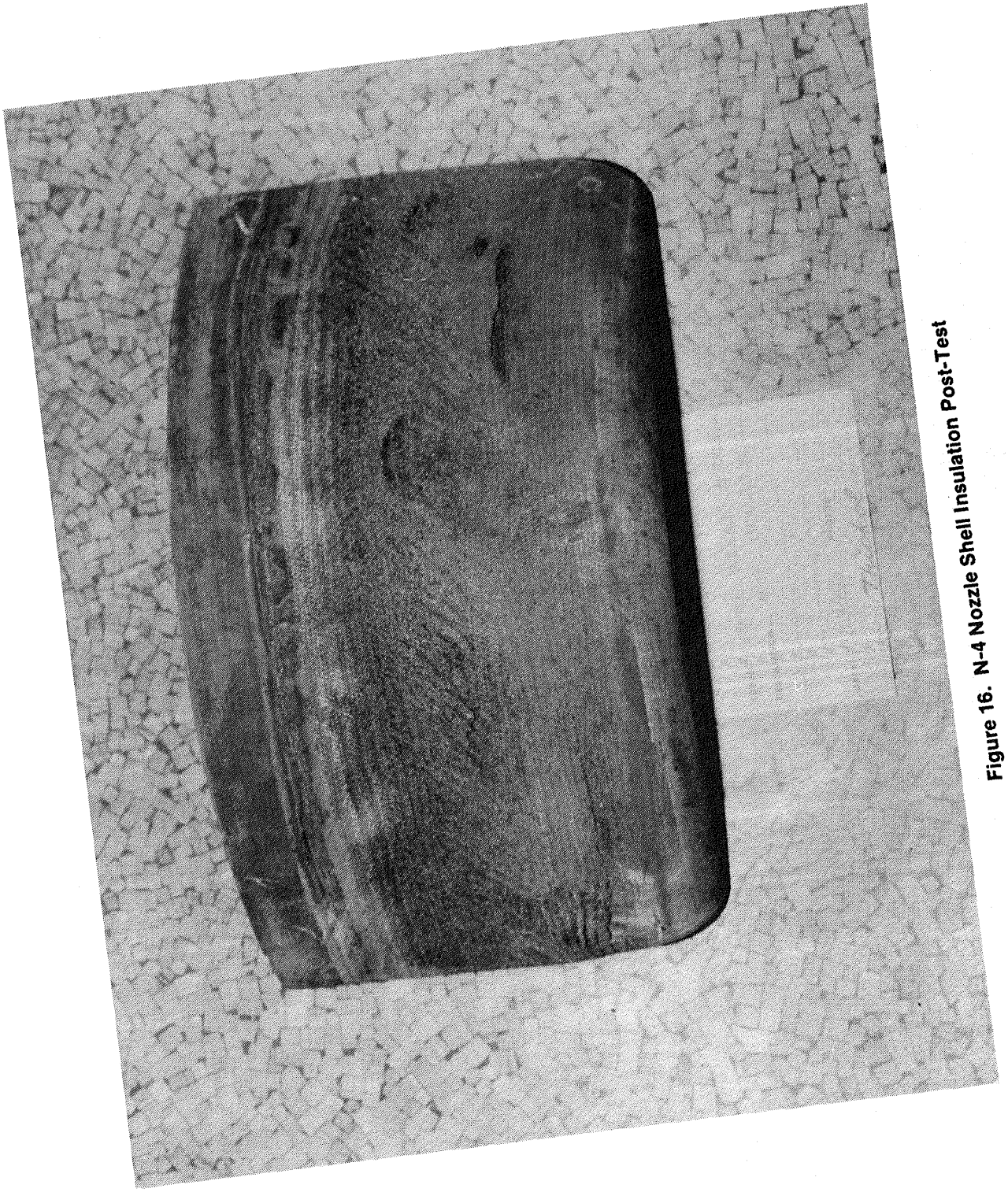

Figure 16. N-4 Nozzle Shell Insulation Post-Test

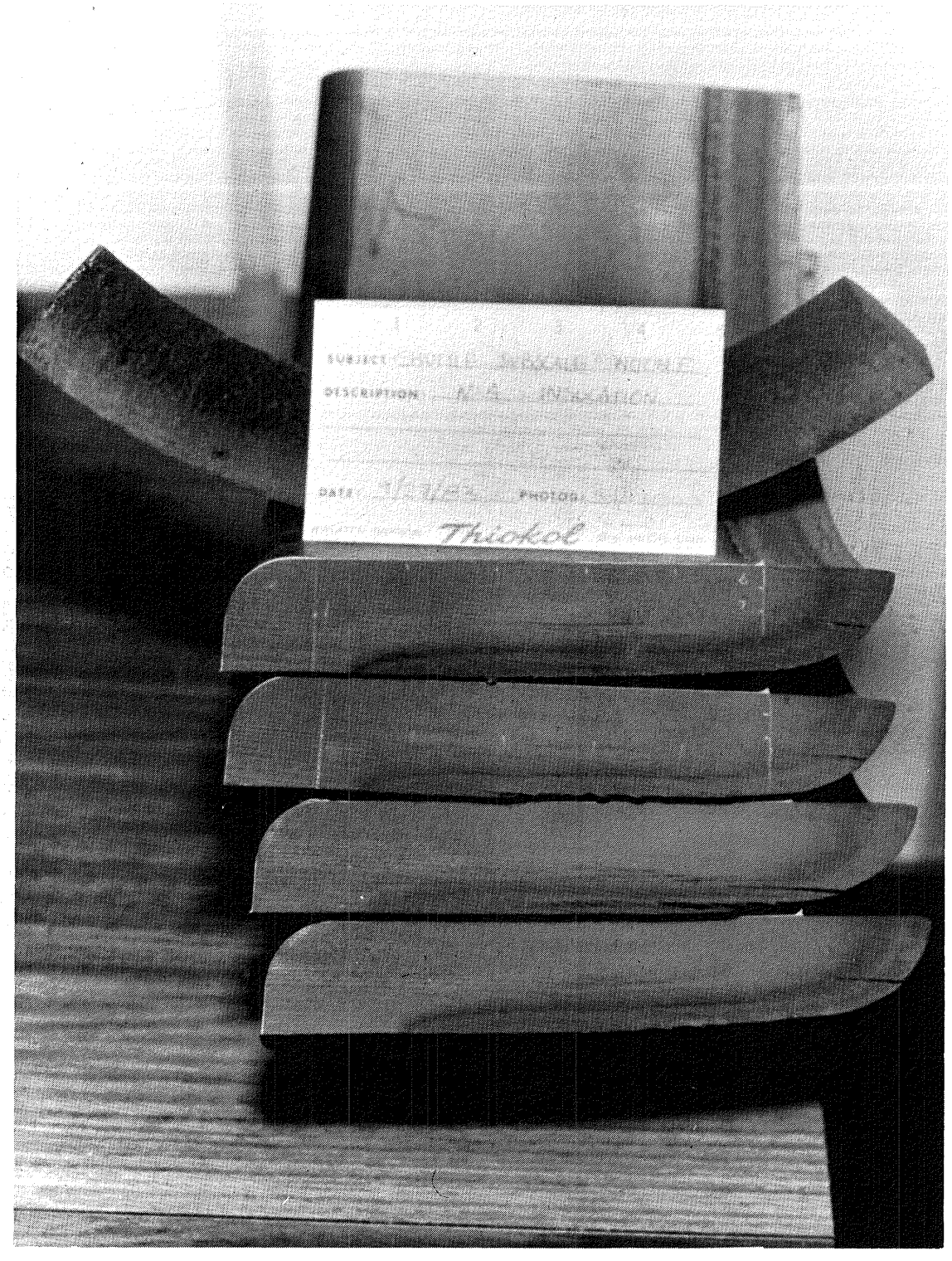

Figure 17. N-4 Nozzle Shell Insulation Post-Test

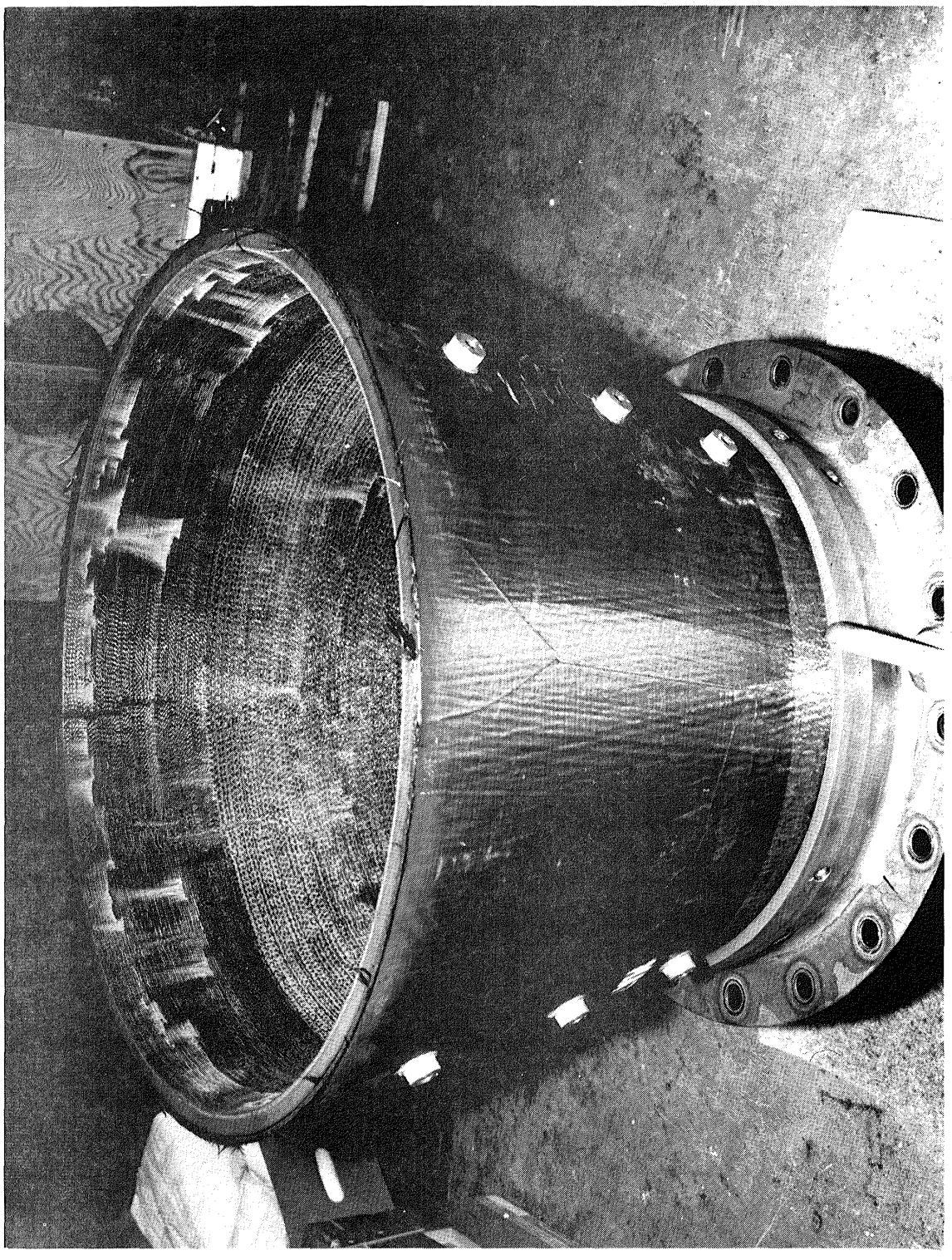

Figure 18. N-4 Nozzle Exit Cone Post-Test

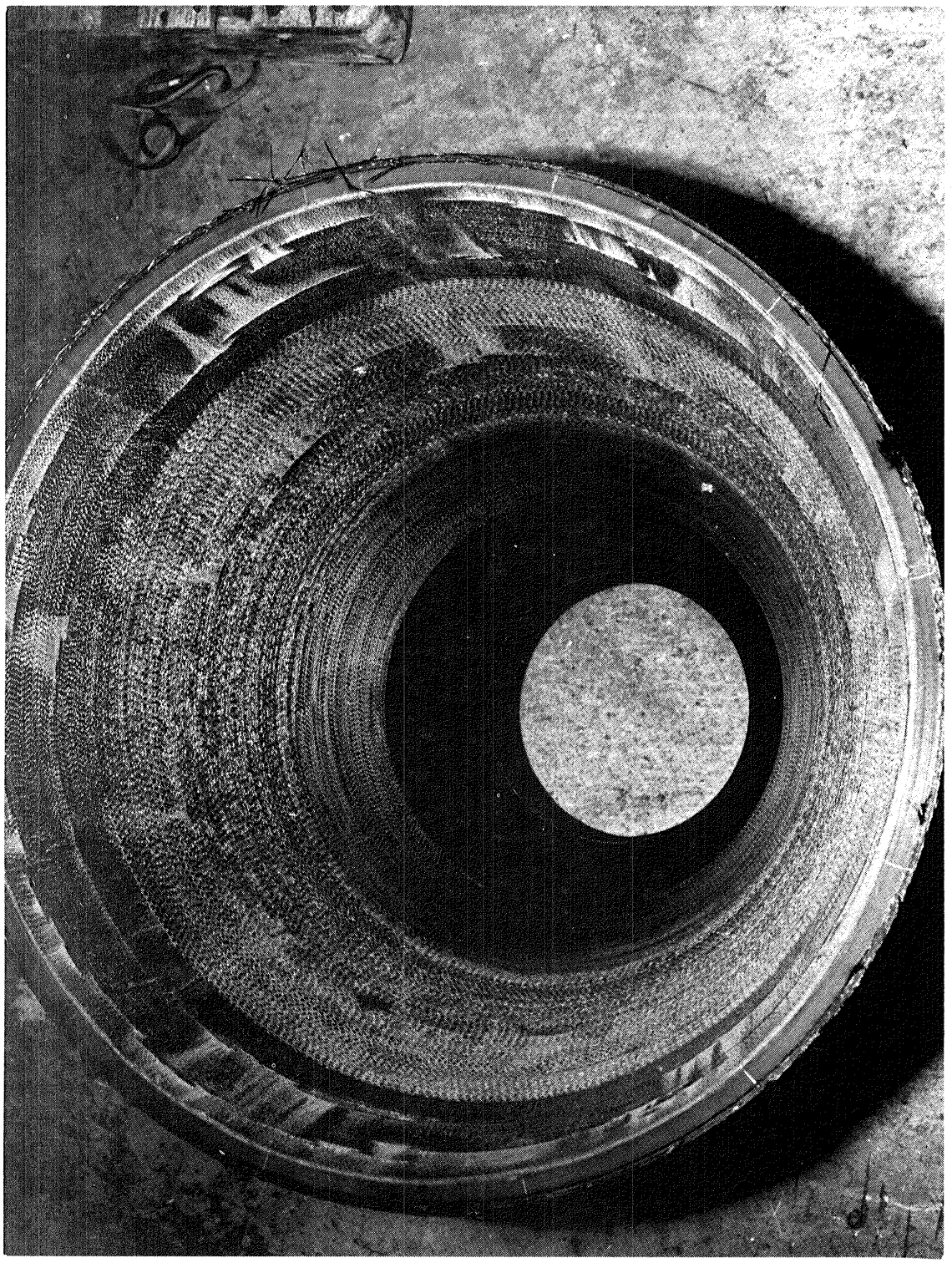

Figure 19. N-4 Nozzle Exit Cone Post-Test

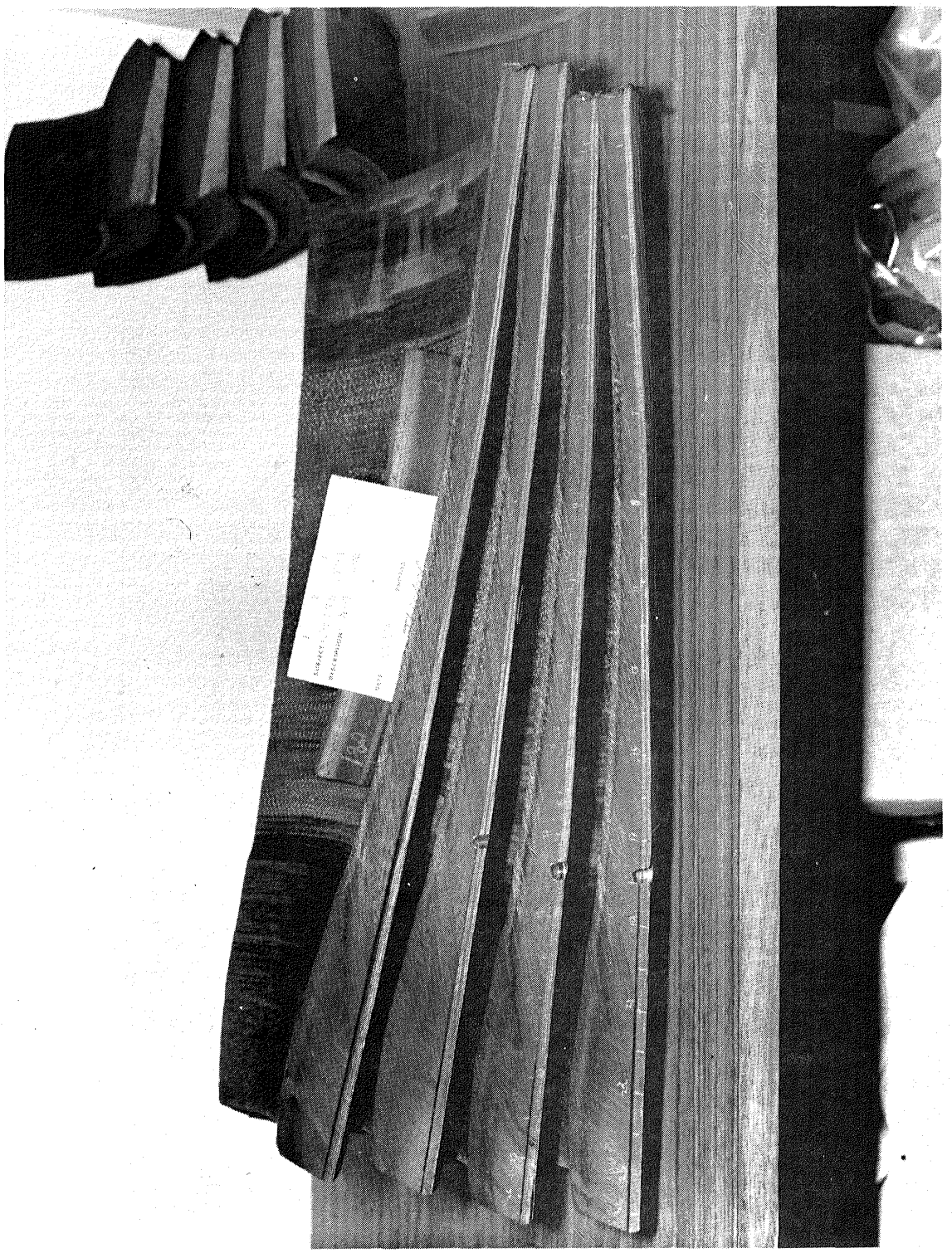

Figure 20. N-4 Nozzle Exit Cone Post-Test

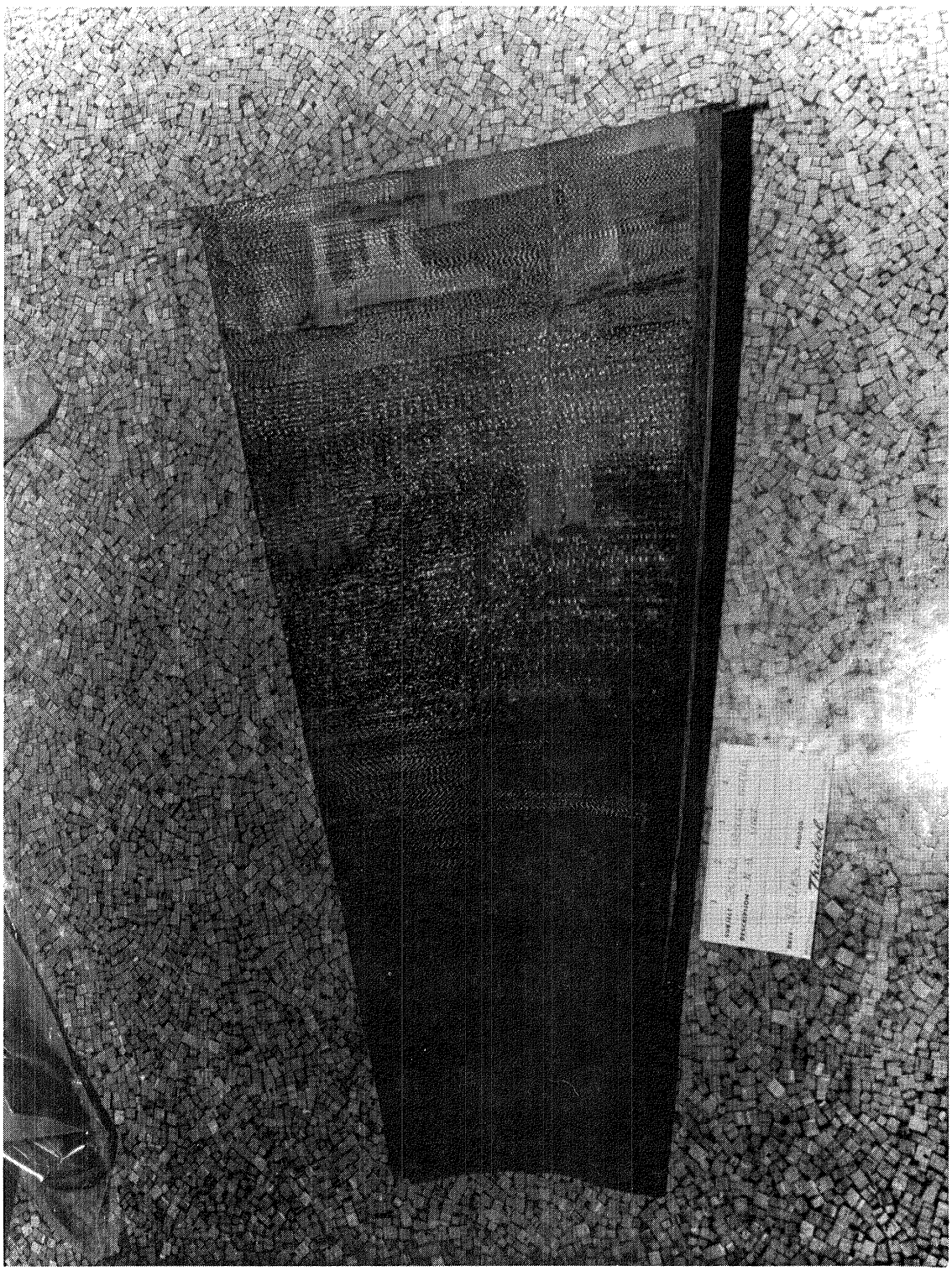

Figure 21. N-4 Nozzle Exit Cone Post-Test

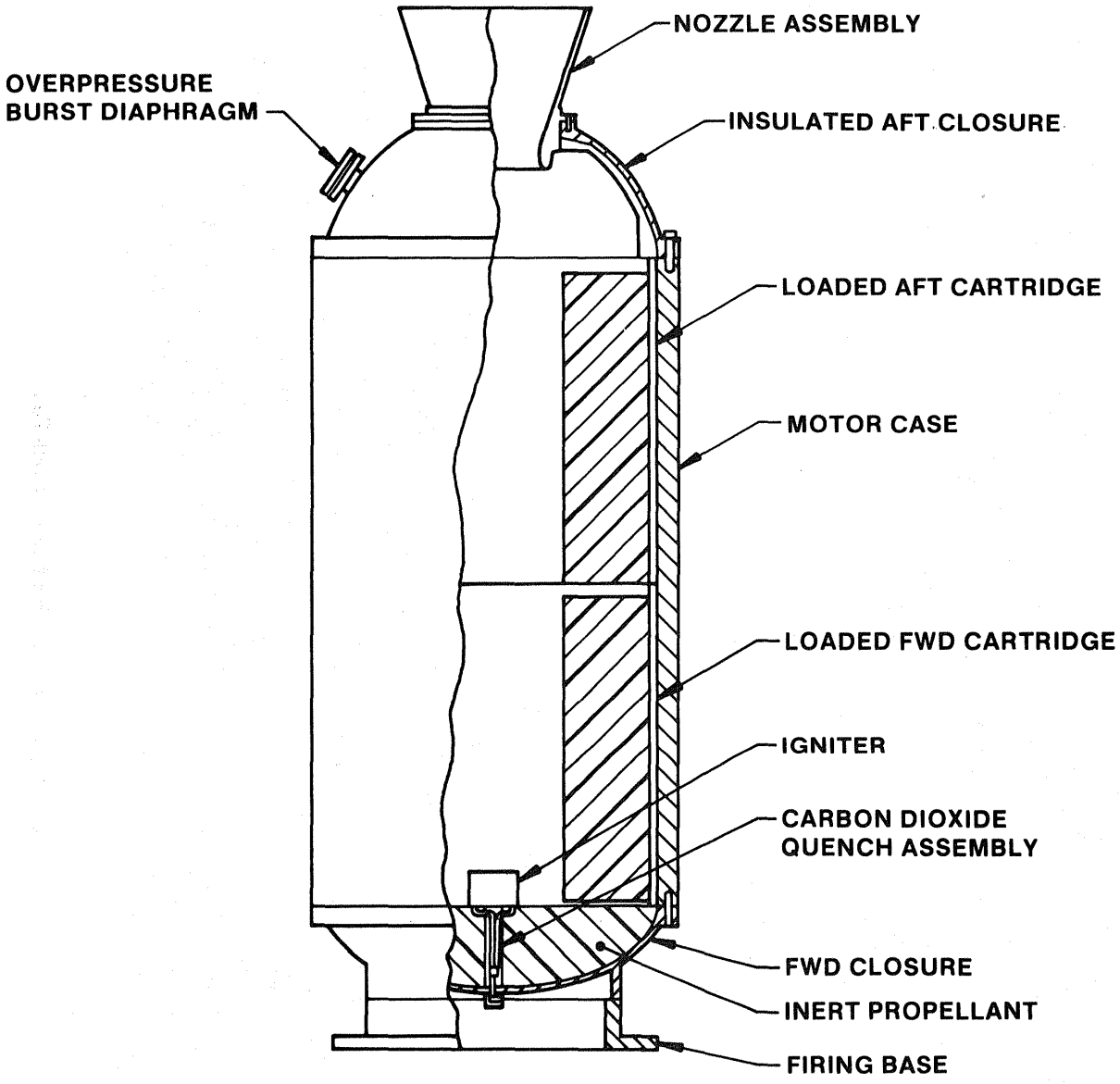

Figure 22. Test Motor Assembly

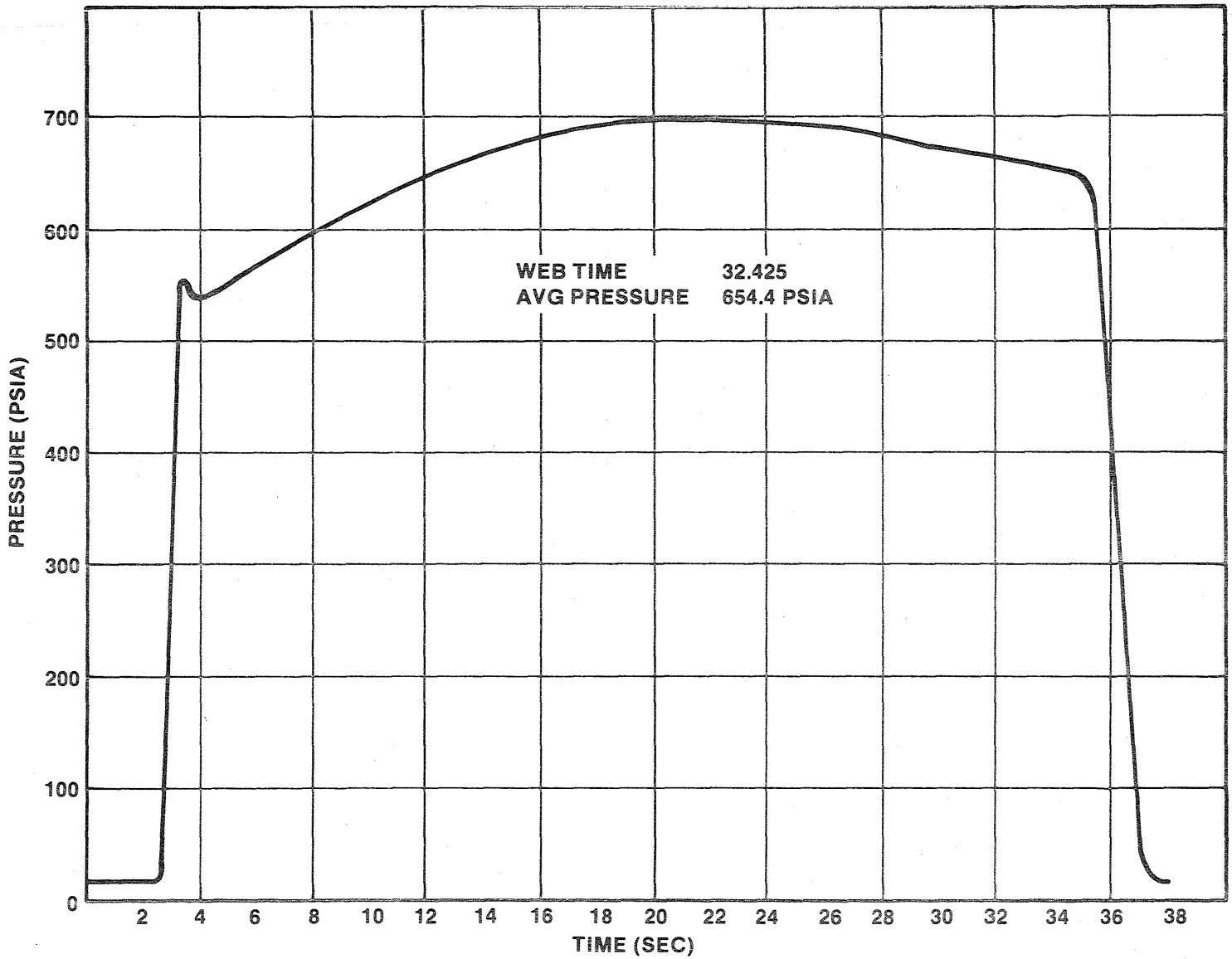

Figure 23. Test N-4 Motor Pressure-Time Curve

84440-4A

The average prefire nozzle throat diameter was 9.503 in.; the average postfire nozzle throat diameter was 10.020 inches. The average throat erosion rate was based on an average web time of 32.42 and the postfire diametrical measurement is 7.97 mil/sec. A typical erosion and char profile is shown in Figure 24. Figure 25 presents the average measured eroded depths, material affected depths, and calculated erosion rates as a function of initial area ratio. These data are based on average measurements taken from four nozzle cross sections (0, 90, 180, and 270 deg). Material affected depth is the perpendicular distance from the initial uneroded surface to the char line. Sections 0, 1, and 2 on the shell insulation were covered by the case insulation.

4.3 THERMOCOUPLE DATA

Sixteen thermocouples (Figures 3 and 4) were installed in the exit cone to measure material thermal response. The six W5 percent RE/W26 percent RE thermocouples were grounded with a tantalum sheath, beryllia insulation and welded tips. The ten Chromel/Alumel thermocouples were grounded with an Inconel sheath, magnesia insulation and welded tips. These thermocouples were chosen over the ungrounded, twisted wire tip type used in the previous N-3 test due to erratic behavior. All of the thermocouples performed satisfactorily. Forward thermocouples recorded temperatures lower than N-2 and N-3, but higher than N-1. Figures 26 through 29 present the thermocouple data.

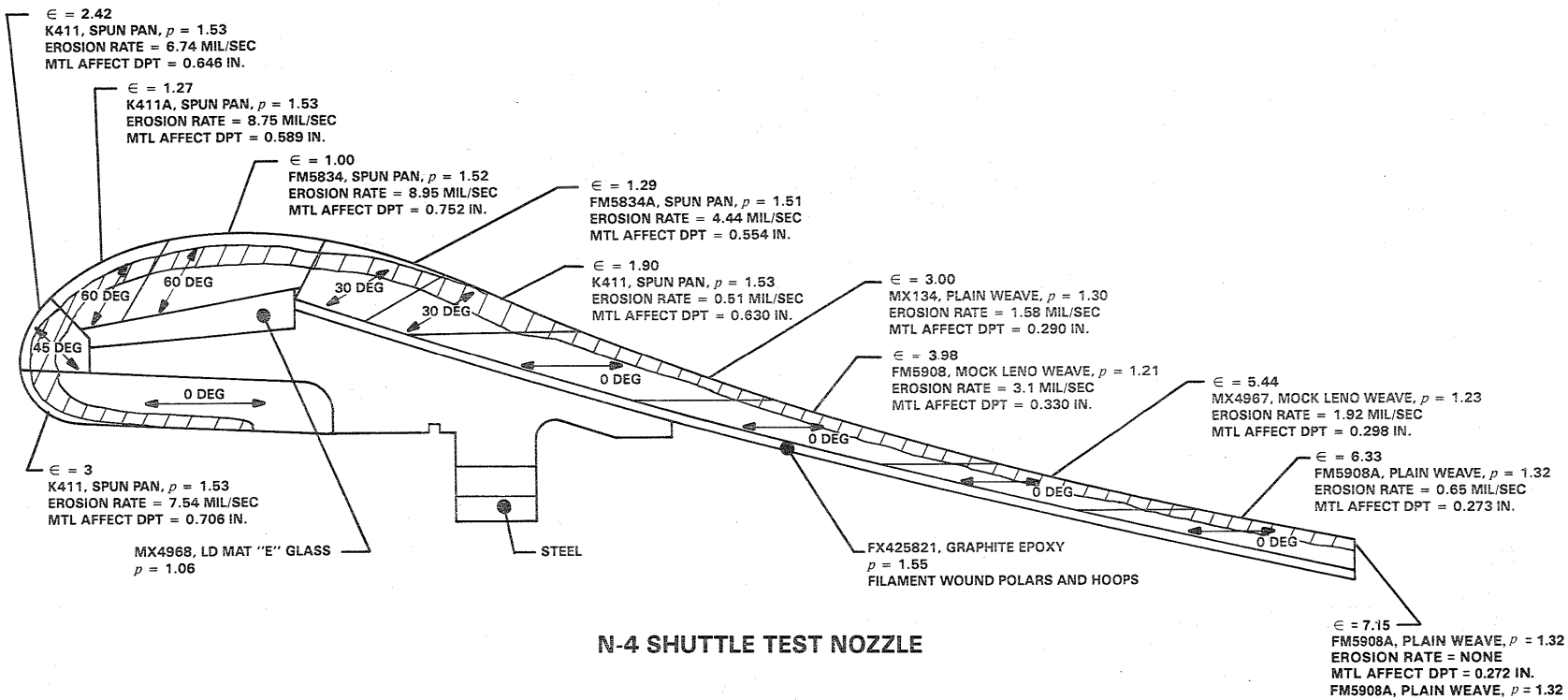

N-4 SHUTTLE TEST NOZZLE

Figure 24. N-4 Nozzle Erosion and Char Profile

85297-7A

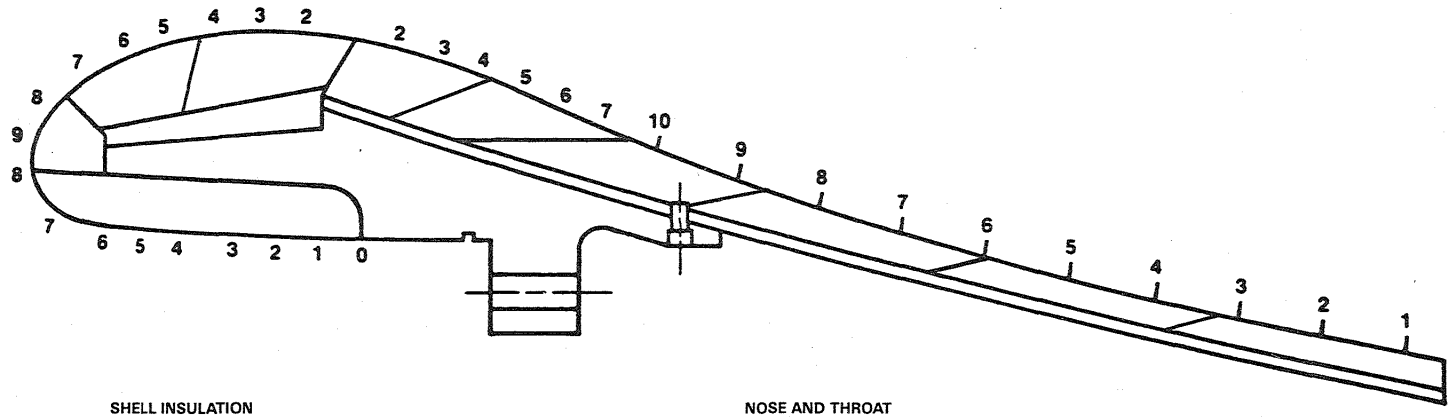

SHELL INSULATION

STATION	A/A*	ERODED DEPTH (IN.)	MATERIAL AFFECTED DEPTH (IN.)	EROSION RATE (MIL/SEC)
1	4.08	0.00	0.00	0.0
2	4.08	0.00	0.00	0.0
3	4.08	0.00	0.32	0.0
4	4.03	0.00	0.32	0.0
5	4.00	0.00	0.29	0.0
6	3.96	0.07	0.41	2.2
7	3.75	0.24	0.71	7.4
8	3.09	0.24	0.95	7.4

NOSE AND THROAT

STATION	A/A*	ERODED DEPTH (IN.)	MATERIAL AFFECTED DEPTH (IN.)	EROSION RATE (MIL/SEC)
9	2.42	0.22	0.65	6.8
8	1.68	0.20	0.71	9.1
7	1.52	0.28	0.57	8.7
6	1.27	0.28	0.59	8.7
5	1.10	0.28	0.70	8.7
4	1.02	0.22	0.75	9.9
3	1.01	0.26	0.75	8.0
2	1.02	0.24	0.72	7.4

FORWARD EXIT CONE

STATION	A/A*	ERODED DEPTH (IN.)	MATERIAL AFFECTED DEPTH (IN.)	EROSION RATE (MIL/SEC)
2	1.10	0.22	0.61	6.8
3	1.29	0.15	0.56	4.6
4	1.44	0.09	0.56	2.3
5	1.67	0.02	0.58	0.6
6	1.90	0.02	0.63	0.6
7	2.14	0.00	0.53	0.0

CENTER AND AFT EXIT CONE

STATION	A/A*	ERODED DEPTH (IN.)	MATERIAL AFFECTED DEPTH (IN.)	EROSION RATE (MIL/SEC)
10	2.63	0.05	0.32	1.5
9	3.00	0.05	0.29	1.5
8	3.47	0.08	0.31	2.5
7	3.98	0.10	0.33	3.1
6	4.33	0.11	0.33	3.4
5	4.96	0.08	0.30	2.5
4	5.44	0.06	0.30	1.9
3	5.88	0.07	0.27	2.2
2	6.33	0.02	0.27	0.6
1	6.76	0.00	0.27	0.0

Figure 25. N-4 Nozzle Average Erosion and Char Data

85297-7C

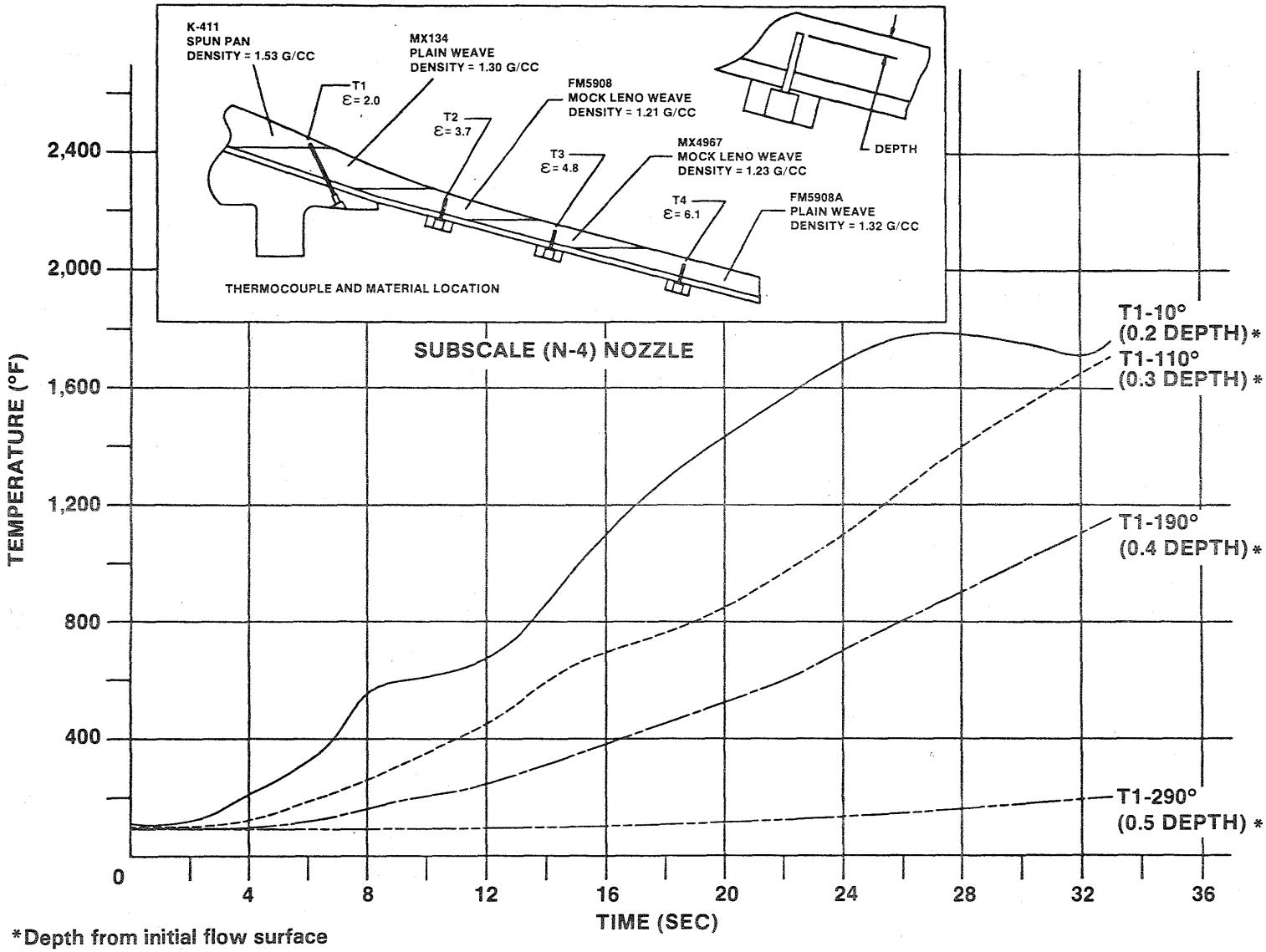

*Depth from initial flow surface

Figure 26. N-4 Nozzle T1 Thermocouple Data

85297-2B

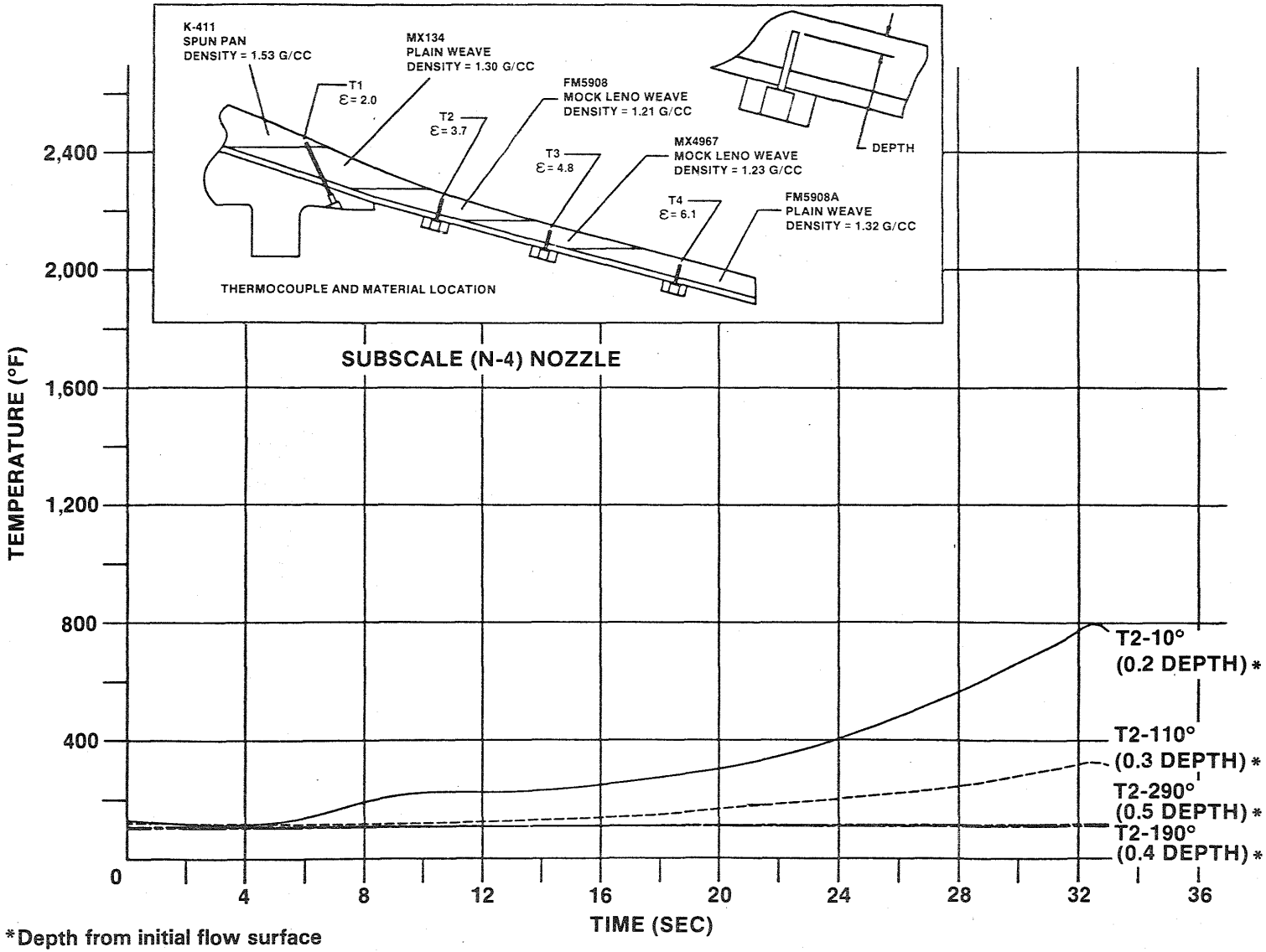

*Depth from initial flow surface

Figure 27. N-4 Nozzle T2 Thermocouple Data

85297-2A

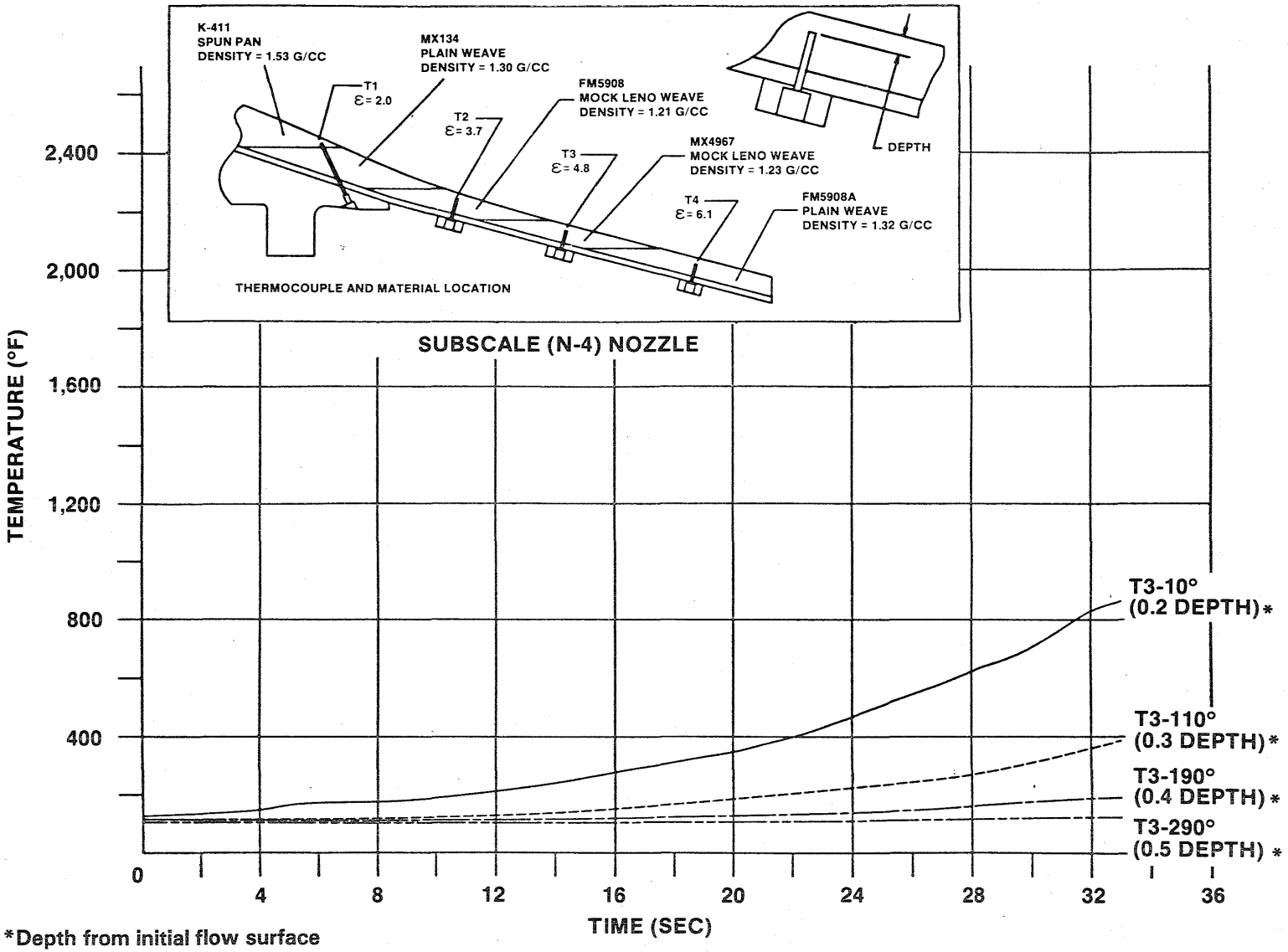

*Depth from initial flow surface

Figure 28. N-4 Nozzle T3 Thermocouple Data

85297-2C

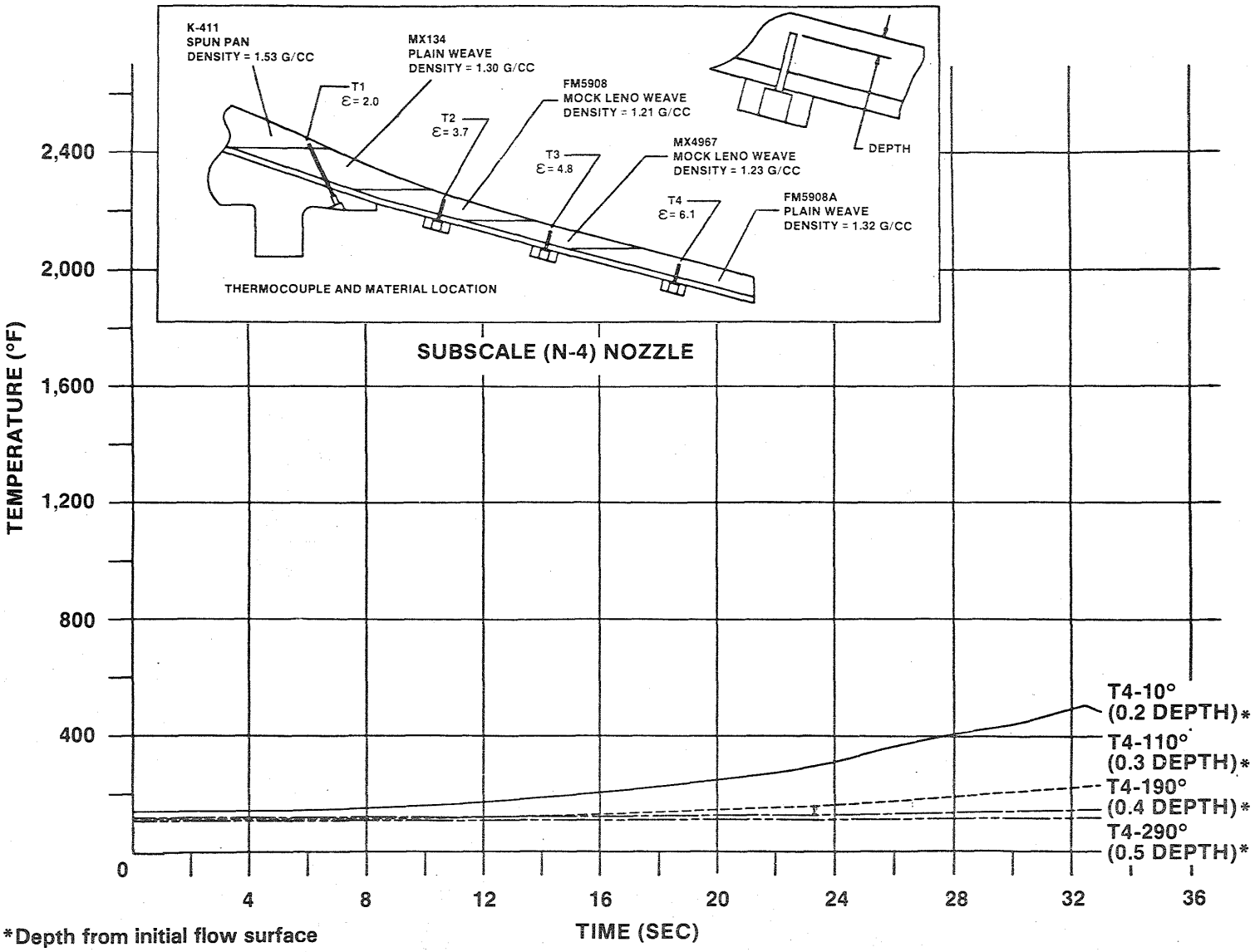

*Depth from initial flow surface

Figure 29. N-4 Nozzle T4 Thermocouple Data

85297-2D

5.0 DATA SUMMARY AND ANALYSES

A comparison of the N-1, N-2, N-3, and N-4 nozzle erosion rates based on average cross sectional measurements is presented in Figure 30. The continuous PAN materials exhibited the best erosion resistance in the nose, inlet, and forward exit cone regions. Spun PAN, pitch, and the baseline FM5055 carbon cloth were all tested in the throat. The spun PAN exhibited the lowest overall erosion rate. Based on pre/post-test diametrical measurements, the spun PAN eroded 13 and 22 percent less than the baseline (8.88 and 7.97 mil/sec vs 10.18 mil/sec); with the pitch material eroding 15 percent less than the baseline carbon cloth (8.65 vs 10.18 mil/sec). A summary of the diametrical throat erosion rates is presented in Figure 31.

Erosion in the exit cones varied between 0 and 4.5 mil/sec and was variable down the cone. It appears that the continuous PAN, baseline material, and low density materials eroded approximately the same in this environment.

Figure 32 shows the material affected depths for the N-1, N-2, N-3, and N-4 nozzles. The baseline material shows to be the best performer in the nose, inlet, throat, and forward exit cone regions. All materials looked equivalent in the aft cone. The pitch material used in the inlet and throat regions of the N-3 nozzle showed much greater char depths than the other materials.

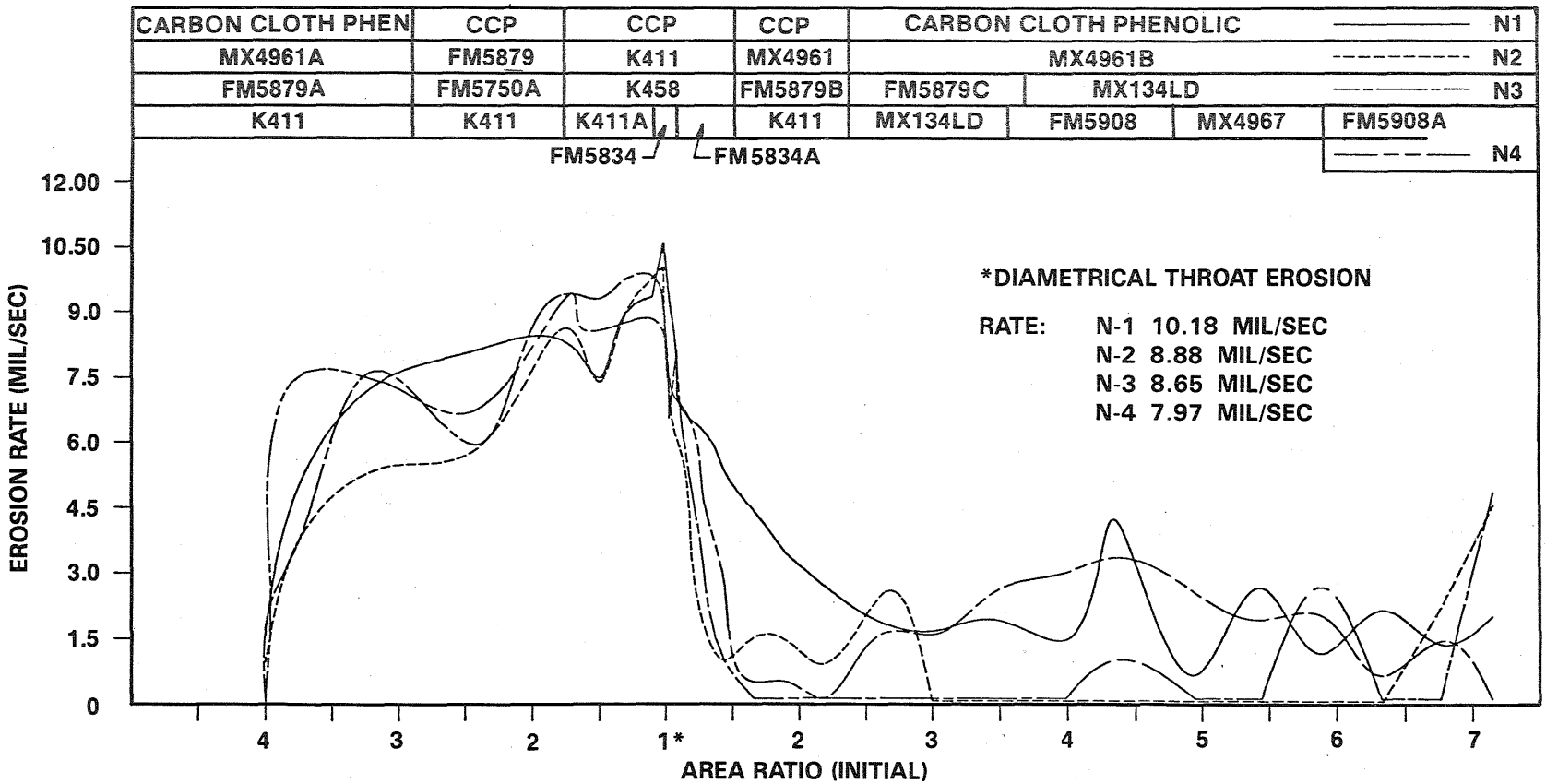

Figure 30. Erosion Rate vs Area Ratio Based on Nozzle Cross Sections

85297-1A

NOZZLE	THROAT MATERIAL	EROSION RATE BASED ON DIAMETRICAL MEASUREMENTS(1) (MIL/SEC)	WEB BURN TIME (SEC)	AVG PRESSURE (PSIA)	% REDUCTION IN THROAT EROSION
N1	U.S. POLYMERIC FM-5055 CARBON CLOTH PHENOLIC	10.18	31.98	637.8	BASELINE
N2	FIBERITE K411 SPUN PAN STACKPOLE FIBER SWB-8 FILLED RESIN	8.88	31.53	649.0	-13%
N3	FIBERITE K458 G-PITCH UNION CARBIDE P55-4K FIBER FILLED RESIN	8.65	31.56	658.8	-15%
N4	U.S. POLYMERIC FM-5834 SPUN PAN STACKPOLE FIBER SWB-8 FILLED RESIN	7.97	32.42	654.4	-22%

(1) $\left(\frac{D_{t_i} - D_{t_f}}{2}\right) / T_{wb}$

Figure 31. Average Diametrical Throat Erosion Rate Comparison

85297-1D

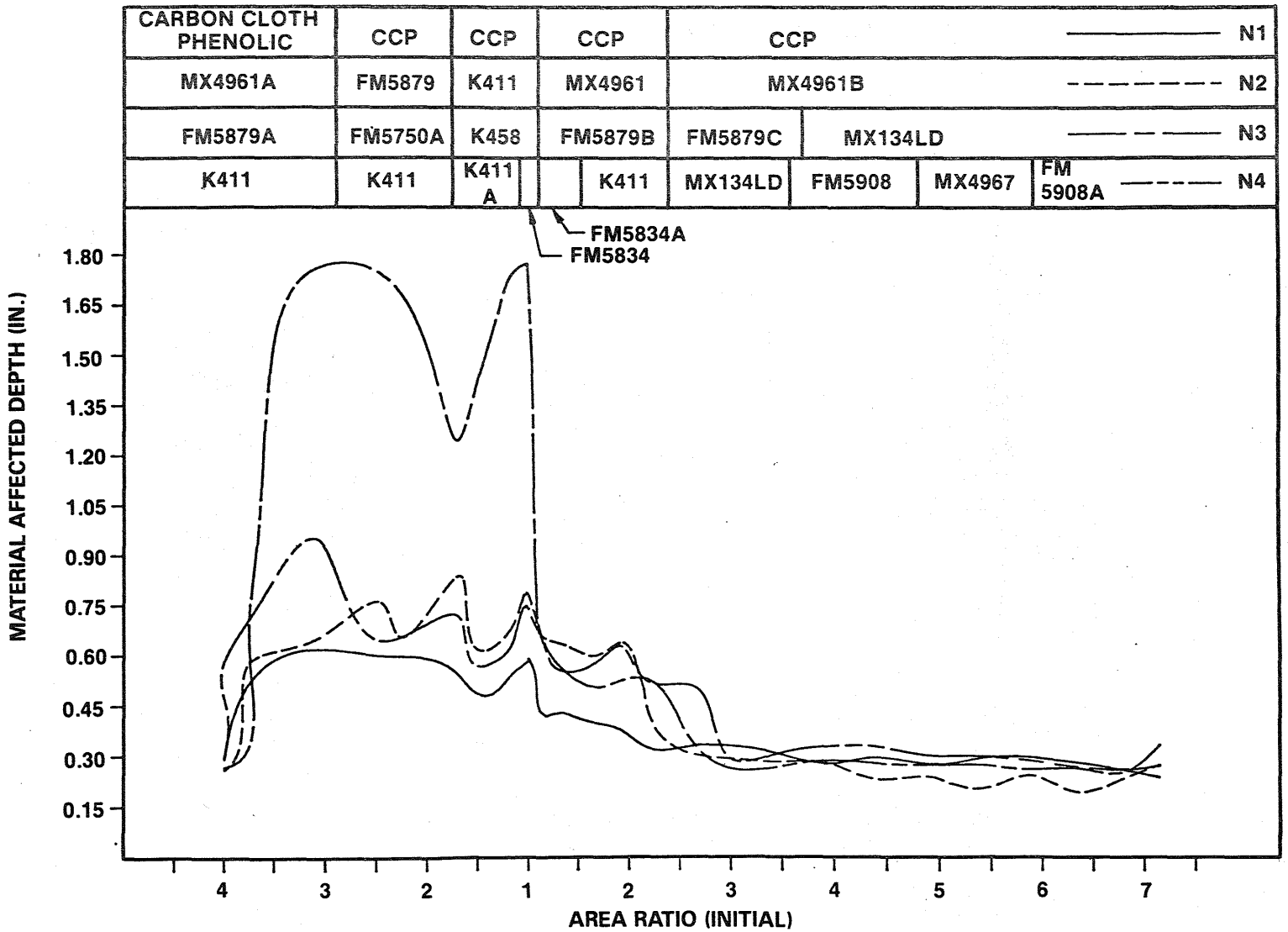

Figure 32. Material Affected Depth-Area Ratio Comparison

85297-1B

6.0 CONCLUSIONS AND RECOMMENDATION

The PAN and pitch materials tested presented no manufacturing difficulties. The pitch materials charred much too deeply and would not be considered suitable for use in the SRM nozzles. The filled PAN materials demonstrated lower thermal conductivity than the unfilled PAN materials. The low density PAN materials demonstrated good performance in the exit cone region. These materials appear to be well suited for use in the SRM nozzles. The mock leno and plain weave low density PAN materials performed equally in these tests.

The spun PAN materials exhibited superior char integrity, Stackpole and Polycarbon both performed equally.

The use of PAN materials in the throat decreased erosion 13 to 22 percent. It is recommended that a high fired continuous PAN be tested in the throat in future nozzles. The graphite epoxy exit cone overwrap performed well.

From the results of these tests, it has been concluded that a full-scale SRM nozzle can be designed using selected materials tested in this program. The alternate full-scale SRM nozzle design, shown in Figure 33, would (1) weigh less (approximately 1,430 lb per nozzle) than the currently qualified SRM nozzle assembly; (2) include PAN-based carbon cloth phenolic material in the throat region to provide a 13 to 22 percent decreased erosion (approximately 0.125 sec I_{sp} gain) over that experienced with the baseline rayon-based carbon cloth phenolic material; employ lightweight PAN-based carbon cloth phenolic material for the aft exit cone, fixed housing, and cowl; use lightweight glass phenolic material for all insulator components; have a PAN-based graphite epoxy filament wound exit cone structural overwrap; and (3) provide an estimated 360-lb increased payload capability for Space Shuttle launches. Included in the total payload gain (360 lb) is 100 lb due to reduction in throat erosion and 260 lb associated with reduced nozzle weight.

Due to the risks associated with introduction and qualification of new nozzle materials, with relative limited test data and the STS-8A nozzle erosion anomaly, MSFC has decided not to incorporate the alternate materials in a full-scale nozzle at this time. No additional alternate materials tests are planned.

PAYLOAD GAIN SUMMARY	
DECREASED THROAT EROSION (ΔI_{sp} = +0.125 SEC/NOZZLE)	
PAN THROAT	100 LB
REDUCED NOZZLE WEIGHT (ΔW_{NOZZLE} = -1,430 LB/NOZZLE)	
LT WT PAN AFT EXIT CONE	70 LB
GRAPHITE EPOXY AFT EXIT CONE	130 LB
LT WT GLASS	40 LB
LT WT PAN FIXED HOUSING	10 LB
LT WT PAN COWL	10 LB
TOTAL PAYLOAD GAIN PER LAUNCH	360 LB

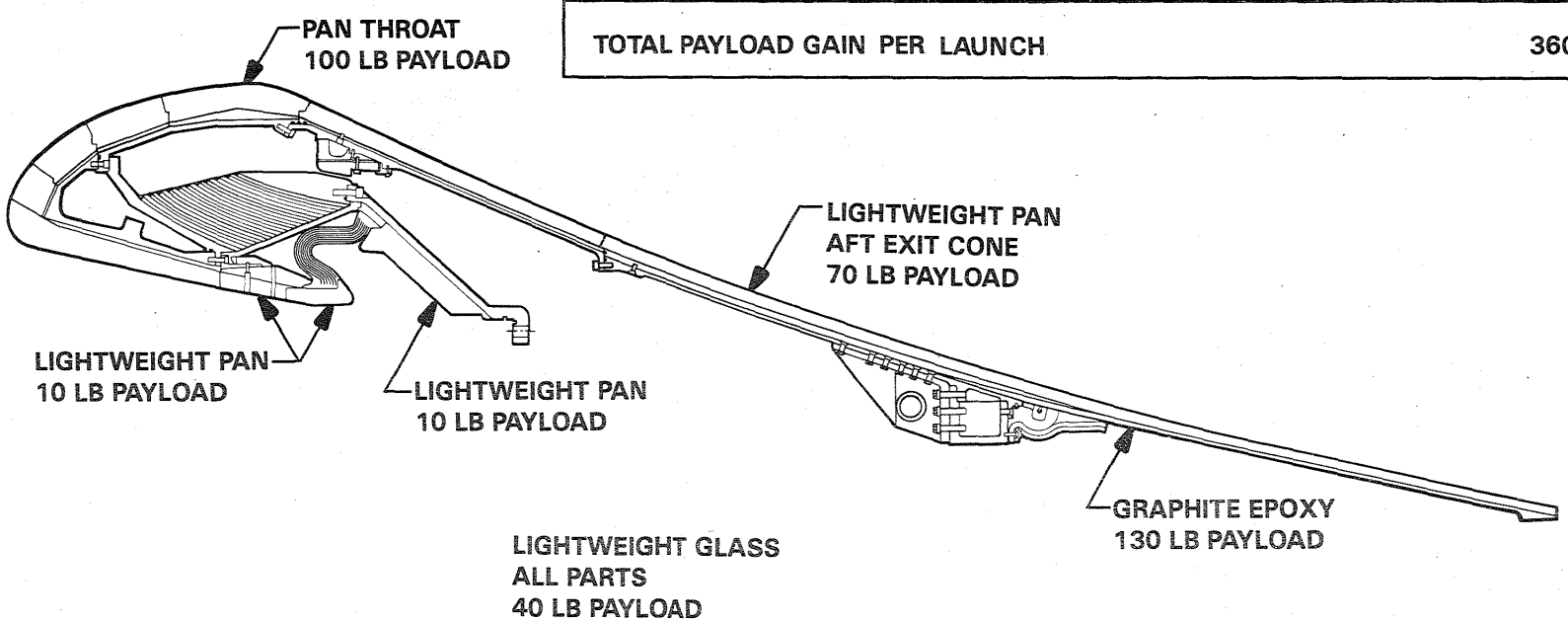

Figure 33. Full-Scale Alternate Materials SRM Nozzle

85297-1C

End of Document