NASA-CR-172204

NASA Contractor Report 172204

NASA-CR-172204
19860014188

Graphite/Epoxy Composite Stiffened Panel Fabrication Development

R. J. Palmer

McDonnell Douglas Corporation
Douglas Aircraft Company
Long Beach, California 90846

Contract NAS1-12675, March 1984

NF02511

FOR EARLY DOMESTIC DISSEMINATION

Because of its significant early commercial potential, this information, which has been developed under a U.S. Government program, is being disseminated within the United States in advance of general publication. This information may be duplicated and used by the recipient with the express limitation that it not be published. Release of this information to other domestic parties by the recipient shall be made subject to these limitations.

Foreign release may be made only with prior NASA approval and appropriate export licenses. This legend shall be marked on any reproduction of this information in whole or in part.

Review for general release (2 years from March 1984).

COPY CONTROL NO. 1

National Aeronautics and
Space Administration

Langley Research Center
Hampton, Virginia 23665

LIBRARY COPY

APR 23 1984

LANGLEY RESEARCH CENTER
LIBRARY, NASA
HAMPTON, VIRGINIA

FOREWORD

This document is the final report that describes the fabrication process development for manufacture of different types of integral stiffened panels that occurred under a series of tasks for Contract NAS1-12675. The work was conducted from 1974 through 1983. Jerry G. Williams of Langley Research Center, Hampton, Virgina, was the NASA technical monitor of the contract.

Dr. D. M. Purdy and Mr. C. Y. Kam of the Douglas Aircraft Company were the program managers, and technical fabrication activity was accomplished under the direction of Mr. R. J. Palmer, Materials & Process Engineering. Principal contributors to the Douglas activities were Mr. E. J. Slaven and Mr. R. M. Moore of Materials & Process Engineering.

X84-10218#

TABLE OF CONTENTS - Concluded

SECTION	PAGE
2.2 Tooling and Tool Fabrication	59
2.2.1 All-Rubber Mandrels	59
2.2.2 Rubber Mandrels With Metal Inserts	61
2.2.3 Aluminum Mandrels With Rubber Pressure Mandrels	61
2.2.4 Aluminum Mandrels, Pressure Cap and Rubber Pressure Mandrels	63
2.3 Typical "J" Stiffened Panel Assembly Methods	63
2.3.1 Lightly-Loaded "J" Assembly	63
2.3.2 Best Method for Fabrication of Medium-Loaded Separate "J" Panel Assembly	65
TASK 3. SINE WAVE "I" STIFFENERS	71
3.1 Sine Wave "I" Stiffened Design Concept	71
3.2 Sine Wave "I" Tooling and Tool Fabrication	71
3.3 Sine Wave Panel Fabrication	71
TASK 4. SOLID BLADE STIFFENER	75
4.1 Flat Aluminum Plate and Aluminum Angle Tooling	75
4.2 Flat Panel Plate With Channel and Angle Tooling	82
4.3 Flat Aluminum Plate and Solid Silicone Rubber Mandrels With Support Frame	83
4.4 Flat Aluminum Plate and Solid Aluminum With Cast Constant Thickness Silicone Rubber Mandrels and a Support Frame	86
4.5 Flat Aluminum Plate and Solid Aluminum Mandrels With Side Silicone Rubber Pressure Appliers and a Support Frame	91
4.6 Flat Blade Stiffened Panel With Molded-in-Place Ribs	96
TASK 5. HONEYCOMB BLADE STIFFENER	103
5.1 Aluminum Block Tooling	103
5.2 Aluminum With Cast Silicone Rubber Surface Tooling	104
5.3 Solid Aluminum With Trapped Rubber and Retainer Frame	108
TASK 6. ORTHOTROPIC ISOGRID STIFFENED PANEL	113
DISCUSSION OF RESULTS	123
REFERENCES	125

LIST OF ILLUSTRATIONS

FIGURE		PAGE
1	Tooling Concept for Lightly Loaded Hat Stiffened Panels.....	4
2	Cap Deformation From Flexible Vacuum Bag.....	6
3	Vacuum Bag Material for Lightly Loaded Panels.....	7
4	Two Skin Hat Stiffened Panel - Panel "A".....	8
5	Panel "A" Bridging Problem.....	8
6	Overlap Two Skin Hat Stiffened Panel - Panel "B".....	10
7	Individual Hat Stiffened Panel - Panel "C".....	10
8	Wrapped Mandrel Hat Stiffened Panel - Panel "D".....	10
9	Lightly Loaded Hat Stiffened Compression Specimen.....	11
10	Machined Aluminum Cavity Mold.....	13
11	Solid Silicone Internal Mandrels.....	16
12	Hollow Silicone Internal Mandrels.....	17
13	Tooling Ready to Cast Inflatable Mandrels.....	18
14	Typical Medium Loaded Hat Design.....	20
15	Typical Layup Methods for Medium Load Panels.....	21
16	Typical Heavy Load Hat Stiffened Panel Concepts.....	23
17	Heavy Load Wrap Around Web.....	24
18	Wrap-Around Hat Layup Procedure.....	26
19	Nylon Film Bagging Procedure With Solid Mandrels.....	28
20	One Side Bag and Envelope Bag.....	28
21	Bag Procedure for Inflated Mandrel Concept.....	29
22	View of Inflatable Mandrel Bag Seal Method.....	30
23	Typical Medium Loaded Hat Stiffened Panel "A".....	32
24	Panel A Hat Stiffened Panel Cured Under Formed Silicone Pressure Bag.....	33
25	Panel B Hat Stiffened Panel Cured With Metal Tool Cap Under Pressure Bag.....	35
26	Panel C Hat Stiffened Panel Cured Under a Solid Silicone Mold..	36
27	Panel D Hat Stiffened Panel Cured in an Aluminum Female Tool with Solid Silicone Mandrels.....	38
28	Waves in Skin Above the Silicone Mandrels from Excess Silicone Rubber Expansion.....	38
29	Panel E Hat Stiffened Panel Cured in an Aluminum Female Mold and Hollow Rubber Mandrels.....	40

LIST OF ILLUSTRATIONS (Continued)

FIGURE		PAGE
30	Good Quality Thick Cap Hat Stiffened Panel Made With Hollow Cast Mandrels	41
31	Poor Quality Thick Cap Hat Stiffened Panel Made With Hollow Cast Mandrels	42
32	Panel F Hat Stiffened Panel Cured in an Aluminum Female Tool and Extruded Hollow Rubber Mandrels	44
33	Typical Medium Load Hat Stiffened Drawing Detail	44
34	Typical Heavily Loaded Hat Stiffened Drawing Detail	45
35	Alternate Heavily Loaded Hat Stiffened Drawing Detail	46
36	Second Alternate Heavily Loaded Hat Stiffened Drawing Detail	47
37	Lay Up Detail for Second Alternate Heavily Loaded Hat Stiffened Panel	48
38	Start of Hat Layup at one Edge of Tool	49
39	Layup with Inflatable Mandrels Ready for Vacuum Bag	51
40	Inflatable Mandrels With Vacuum Bag in Place	53
41	Potted end of a 5 Hat Heavy Load Specimen	54
42	Closeup of End of One Hat	55
43	Potted 2 Hat Stiffened Panels Ready for Compression Test	56
44	"J" Stiffened Panel Design Concepts	58
45	Basic "J" Stiffened Tool Concept	60
46	All Silicone Rubber Mandrels	60
47	Nonuniform Thickness Cap	60
48	Metal Inserts in Rubber Mandrels	62
49	Aluminum and Rubber Mandrels	62
50	Aluminum Mandrel and Cap With Rubber Pressure Mandrels	64
51	Light "J" Panel Assembly	64
52	Medium Load - Separate "J" Panel Assembly	66
53	Details of Tool for "J" Stiffened Panel	67
54	"J" Mandrel Tools Ready for Placement in Support Frame	68
55	"J" Stiffened Panel With Potted Ends	69
56	End View - "J" Stiffened Panel	70
57	Sine Wave "I" Stiffened Panel	72
58	Sine Wave "I" Stiffener Tooling	73

LIST OF ILLUSTRATIONS (Continued)

FIGURE		PAGE
59	Sine Wave "I" Stiffened Panel Assembly	74
60	One Solid Blade Stiffened Panel Concept	76
61	Detail of an Alternate Blade Stiffener Design	77
62	Aluminum Angle Tooling	78
63	Basic Blade Layup Steps	79
64	Solid Blade Stiffened Panel Made With Aluminum Angle Tooling	81
65	Solid Blade Stiffened Panel Made With Angles and Channel Tooling	82
66	Solid Blade Stiffened Panel Made With Solid Rubber Mandrels	85
67	Solid Blade Stiffened Panel Made With Silicone Rubber Covered Aluminum Blocks	87
68	Filler Tool	89
69	Skin to Blade Joint	90
70	Solid Blade Stiffened Panel With Solid Aluminum Mandrel and Rubber Side Pressure Bars	92
71	Placement of Densified Skin on Tool Plate	93
72	Partially Completed Blade Stiffened Panel	94
73	Completed Blade Stiffened Panel Ready for Compression Test	95
74	Start of Blade Fabrication for a Rib Stiffened Panel	97
75	Forming a Blade Stiffener Onto the Tool	98
76	Blade and Rib in Position	99
77	Flanges of a Cross Rib	100
78	Solid Blade/Cross Rib Stiffened Panel With Tooling Pressure Mandrels all in Position	101
79	Completed Blade/Rib Stiffened Panel	102
80	Honeycomb Blade Design Concept	105
81	Honeycomb Blade Stiffened Panel Made With Aluminum Block Tools	106
82	Honeycomb Blade Stiffened Panel Made With Rubber Covered Aluminum Blocks	107
83	Honeycomb Blade Stiffened Panel Made With Aluminum Mandrels and Trapped Rubber for Side Pressure	109
84	Honeycomb Blade Stiffened Panel	111
85	End View of Honeycomb Blade Stiffened Panel	112
86	Isogrid Panel Design	114

LIST OF ILLUSTRATIONS (Concluded)

FIGURE		PAGE
87	Cross Section Detail of Isogrid Rib	115
88	Wooden Isogrid Tool	116
89	Isogrid Strips in Rubber Tool	117
90	Complete Isogrid Layup in Rubber Tool	118
91	Isogrid Skin in Place in Tool Frame	120
92	Completed Isogrid Panel	121
93	Angle Reinforcement for Isogrid Attachment to Skin	122

I

INTRODUCTION

Analytical studies of structural efficiency have indicated large weight savings are available using graphite-epoxy materials instead of metals in structural design. To evaluate the merit of various configurational concepts, a variety of minimum weight composite compression panels were designed by NASA, constructed under contract by the Douglas Aircraft Company and subsequently tested by NASA. Stiffened panels of the following configurations were fabricated: hat-stiffened, J-stiffened, I-stiffened, blade-stiffened, and honeycomb-blade-stiffened. In addition, processes were developed to manufacture sine-wave-web I-stiffened panels and orthotropic isogrid panels. Most of the panels were designed to meet typical commercial aircraft wing or fuselage compression panel structural requirements including strength and axial and shear stiffness, and to not buckle at loads less than the design ultimate. Panels are categorized according to ultimate design load requirements as lightly-, medium-, and heavily-loaded. These categories correspond to axial compression stress resultant loads of up to 3,000 lb./in., 15,000 lb./in., and 25,000 lb./in., respectively. The most successful manufacturing process is presented for each type of construction. Sufficient detail is presented so that the use of unsuccessful manufacturing approaches might be avoided.

Identification of commercial products in this report is used to adequately describe the test materials. Neither the identification of these commercial products nor the results of the investigation published therein constitute official endorsement, expressed or implied, of any such product by either the Douglas Aircraft Company or NASA.

Materials and Curing Cycles

The majority of the test panels were fabricated with Rigidite 5208/T-300 prepreg tape (.005 inch/ply) or woven graphite as supplied by Narmco, Costa Mesa. All prepreg materials were tested to see that they met minimum specifications by incoming quality control tests. The aluminum mold surfaces were all coated with FreKote 33 and baked to 350°F prior to layup of parts. The following standard autoclave curing cycle, developed at the Douglas Aircraft Company, was used for curing most of the specimens.

1. Apply full vacuum pressure.

2. Heat to 250°F with full vacuum.

3. Dwell at 250°F with full vacuum.

   a. Heat Up Rate = 1/2°F/minute No Dwell.
   b. Heat Up Rate = 1°F/minute 30-Minute Dwell.
   c. Heat Up Rate = 7°F/minute 1-Hour Dwell.

4. Apply 100 psi at completion of dwell and vent vacuum to atmosphere.

5. Raise temperature to 350°F.

6. Hold at 350°F for two hours.

7. Cool under pressure to below 200°F.

Panels usually had lower quality, such as excess void content when this curing cycle was not followed. Full 100 psi autoclave pressure from the start of the curing cycle, tried on several of the difficult to seal panels with inflatable mandrels, always resulted in poor panel quality, with higher than usual void content.

Several other fiber resin systems were used for a small number of panels during the course of the program. In these cases, the processing cycles of time/temperature/pressure were those recommended by the manufacturer's instructions.

TECHNICAL APPROACH

This section covers the details of the step-by-step development of the fabrication procedures used to manufacture flat graphite/epoxy panels with different types of integrally molded stiffeners.

The program is reported as a series of six manufacturing sequence development tasks and sub-tasks representing the six basic stiffener design concepts. The developments occurred over a period of seven years and proceeded from one stiffening concept to the next, based on the need and requests from NASA to gain structural/analysis performance data. Panel size started as six-inch-wide by 18-inch-long single-stiffener elements and progressed through two, three, and six stiffener panels with overall dimensions of 30-inch-wide by 60-inch-long elements.

Task 1. Hat Stiffeners

Task 2, "J" Stiffeners

Task 3. "I" Stiffeners

Task 4, Solid Blade Stiffeners

Task 5. Honeycomb Blade Stiffeners

Task 6 Isogrid Blade Stiffeners

TASK 1. HAT STIFFENERS

The hat stiffened panels were designed for a wide variety of load carrying conditions. The constructions started with light fairing type structure and advanced to heavy wing-like structure. This section is presented as a series of experiments to fabricate the different types of integral molded hat stiffened panels. The report gives the details of manufacture, identifies and discusses the problems of poor quality panels, and suggests the most successful methods of fabrication.

1.1 Lightly Loaded Hat Stiffened Structure

A series of different concepts were created for lightly-loaded hat stiffened panels and that were later fabricated into test panels. The tooling for all of these panels consisted of a flat surface tool plate, solid male mandrels for the hats, and a suitable vacuum bag. (See Figure 1.) Several materials were used to make the solid mandrels.

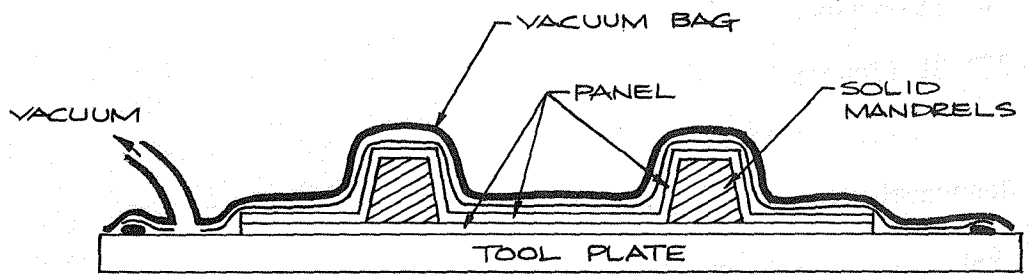

Solid Mandrels

- Cast Silicone
- Aluminum
- Teflon
- Wash Out Plaster
- Foam

FIGURE 1. TOOLING CONCEPT FOR LIGHTLY LOADED HAT STIFFENED PANELS

1.1.1 Solid Mandrel Materials

Aluminum	Aluminum mandrels required a very high polish surface, along with a fluorocarbon mold release to allow the mandrels to be removed from the part. Aluminum mandrels could not be used with contoured parts or parts that had edge panel skin doubler build up where the hat lapped over the doubler. Any bump or dent in an aluminum tool caused the part to adhere to the tool and made part removal difficult.

1.1.1 (Cont'd)

Teflon*	Solid Teflon mandrels with a good surface finish behaved similar to aluminum mandrels, except that mold release was not required. Teflon mandrels had the same joggle restriction and damaged problem as aluminum mandrels. Teflon mandrels, for thin walled sections, could be removed from panels with mild, constant contour.
Wash Out Plaster	Wash out plaster mandrels did not require as smooth a surface as did aluminum mandrels. It also had no restriction on contour or joggle of hats over doubler details on the skin. However, plaster mandrels were brittle, time consuming to make and seal, and difficult to wash out after a part was made.
Foam	Several types of foam materials (polyurethane, epoxy, and modified vinyl) were considered for mandrel materials but never used for this program. If foam were used, it would have remained with the panel and added weight and material costs to each part. The foam mandrel would not limit the contour or joggle design of a panel.
Silicone Rubber	Solid silicone rubber mandrels were made by both an extrusion and a casting technique. The mandrels required a reasonably smooth surface. Silicone was more forgiving, in that it would not adhere to the tool as easily as for aluminum or Teflon. When the silicone rubber was removed from a panel, it tended to stretch and reduce in cross section. This reaction made mandrel removal comparatively easy. Although silicone rubber acted naturally as a mold release, some of the epoxy resins, after several curing cycles, would bond to the rubber surface. Therefore, a fluorocarbon mold release was used on the silicone rubber. The solid silicone mandrels were soft and could be formed to contour or joggled over doublers in the center or edge of a skin panel. The flexibility of the silicone rubber presented a problem of how to retain proper location and alignment of mandrels during a curing cycle.

*E. I. duPont de Nemours & Co.

1.1.2 Design Concepts for Lightly-Loaded Panels

The methods used to lay up lightly-loaded hat stiffened panels are presented in detail in this section. Lightly-loaded structure, for this report, is defined as structure with a maximum skin or hat doubler cap thickness of 0.12 inch. This was the maximum thickness that could be cured, using a flexible vacuum bag and autoclave processing cycle, without causing the typical cap deformation shown in Figure 2. The low resin viscosity during the early part of the curing cycle allowed the flexible vacuum bag to distort the sides of the cap reinforcement during the pressure curing cycle before the resin could reach a stable cured condition.

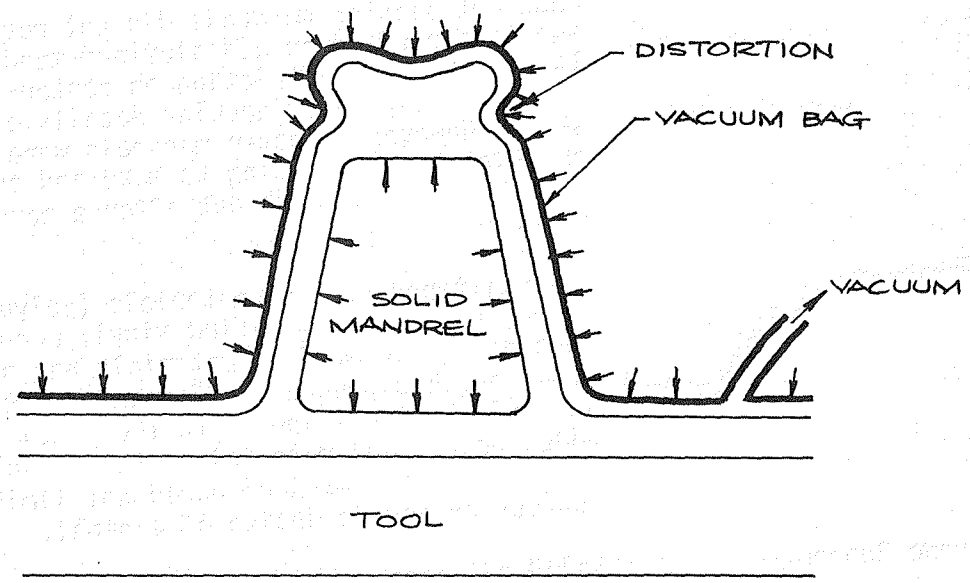

FIGURE 2. CAP DEFORMATION FROM FLEXIBLE VACUUM BAG

1.1.3 Pressure Bag Material

Three types of vacuum bag materials were used for processing these panels in an autoclave cure.

First, a nylon film was used and carefully placed in position over the part. Great care was taken to insure that the bag did not bridge in the concave corners between the hat walls and inner skin surface. The nylon bag was sealed to the tooling plate with a chromate type sealing putty. (See Figure 3A.) This system, of lowest material cost, was used for most of the thin panel fabrication.

Second, a high (1000%) elongation silicone rubber sheet was stretched over the panel, sealed at the edges, and then, as a vacuum was applied under the bag, the silicone rubber stretched and formed perfectly into the hat shape of the part. (See Figure 3B.) This bagging method offered an effective quick bag system capable of making good quality panels. It did demand high quality, tight corner layup, as stretching of the bag would reduce the available autoclave pressure in the corners. A pressure forming tool used during layup into the corners helped minimize this concern. (See Figure 3B.)

Third, a thick formed silicone rubber bag was made from uncured calendered silicone rubber stock. (See Figure 3C.) The uncured rubber, approximately 1/8 inch in thickness, was formed over a mockup hat panel, placed under a nylon vacuum bag and cured in an oven. This method was the most expensive bagging method attempted for making only one part, but it did give good quality parts, particularly in the hat-to-web-to-skin joint area. The formed bag was quick to install and did help hold the hat details in the desired location. The formed silicone bag compared to a nylon bag, did not improve the deformation of the upper cap reinforcement when the thickness of the cap was greater than 0.12 inch as shown in Figure 2.

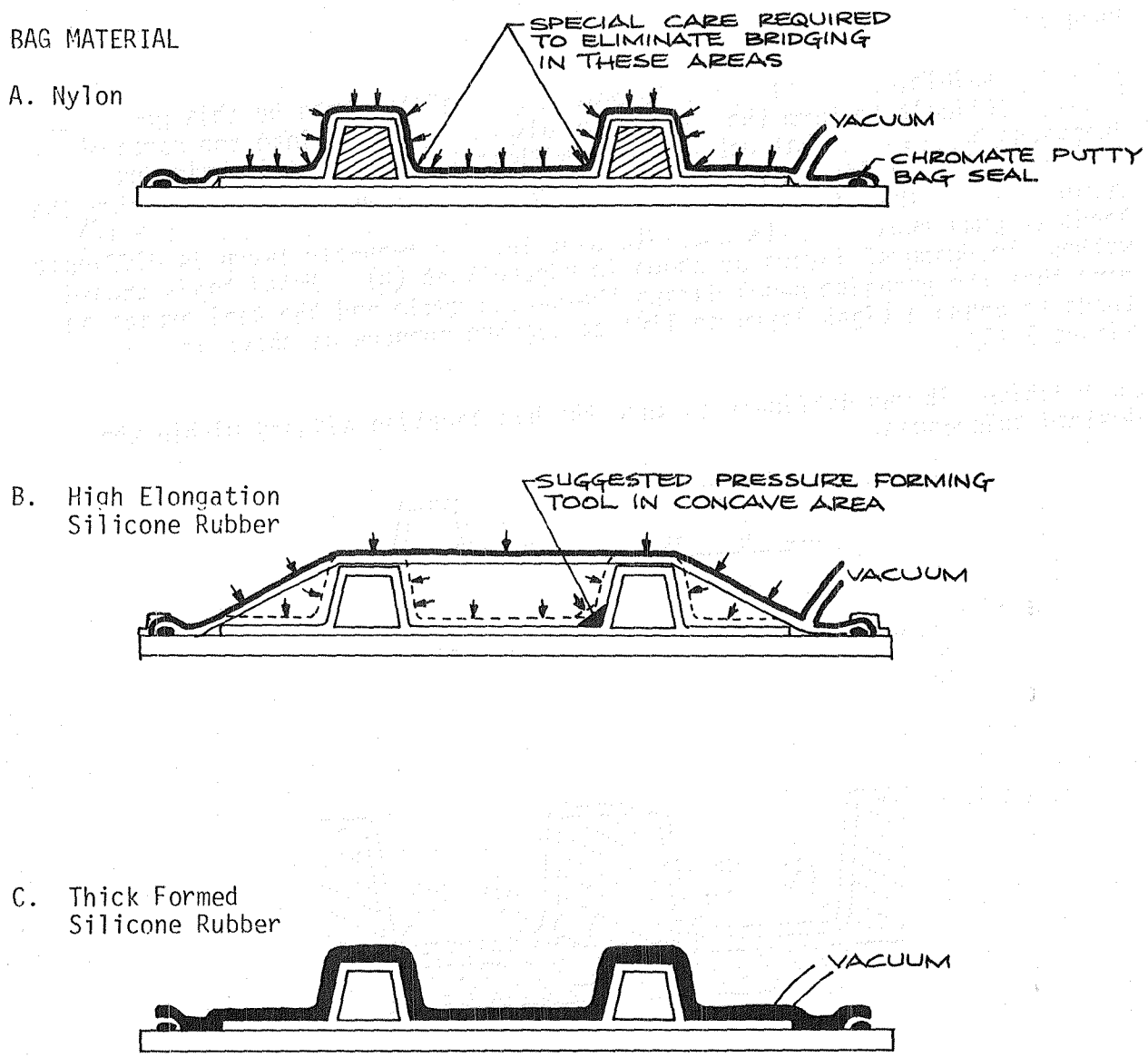

FIGURE 3. VACUUM BAG MATERIAL FOR LIGHTLY LOADED PANELS

1.1.4 Fabrication of Lightly-Loaded Hat Stiffened Panel A

Figure 4 shows the design concept for a simple hat stiffened panel. It consisted of an outer contour skin and a continuous hat shaped inner skin with no extra doublers.

The lower, or outer skin, was laid up, ply-by-ply, on a flat tool plate. The mandrels, coated with fluorocarbon mold release, were located on the surface of the skin. The inner skin was layed up ply-by-ply from one edge of the panel to the opposite edge. The panel was sealed under a nylon vacuum bag and cured in the autoclave.

Results

It was possible, but difficult, to make high quality parts by this process. It was difficult to form the inner skin ply-by-ply layup into the concave junctions between the hat web and skin without bridging. This bridging problem was multiplied, ply-by-ply, during layup and was magnified during the curing cycle. Material forced into concave joint as shown in Figure 5 (A) tends to pull away from the opposite side (B). Ply-on-ply layup is difficult without bridging of layers as shown in Figure 5 at (B). Metal tools expand more than the graphite panel during the curing cycle and the tool expansion tends to cause a tight layup to lift at concave corners as shown in Figure 5 (C).

In addition, it was difficult to keep the hat location aligned within the desired tolerances.

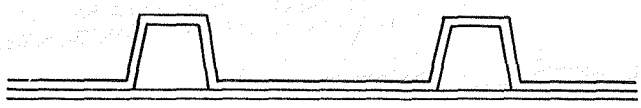

FIGURE 4. TWO SKIN HAT STIFFENED PANEL - PANEL A

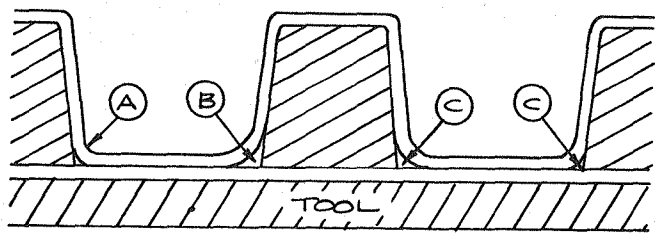

FIGURE 5. PANEL "A" BRIDGING PROBLEM

1.1.5 Fabrication of Lightly-Loaded Hat Stiffened Panel B

Figure 6 shows the design concept for a modified, inner separate overlapped section skin hat stiffened panel that was directed towards reducing the bridging problem at the hat-to-skin joint. The lower outer skin was layed up as in Section 1.1.4. The inner hat skin was layed up in sections from the center of one skin area, over the hat mandrel, and overlapped at the center of the adjacent skin area with the next inner skin detail. The panel was sealed under a nylon vacuum bag and cured in the autoclave.

Results

The layup of this panel was much easier, and the quality of the panel was more uniform than the panel in Section 1.1.4.

1.1.6 Fabrication of Lightly-Loaded Hat Stiffened Panel C

Figure 7 shows the design concept for separate hats co-cured and bonded to a continuous outer skin. The outer skin was layed up as in Section 1.1.4. The hat stiffeners were layed up as separate details on the individual mandrels. Figure 7 shows one of the hats with extra doubler reinforcement in the upper cap area. The hat details and mandrels were placed on the outer skin. The panel was sealed under a nylon or silicone rubber vacuum bag and cured in the autoclave.

Results

This design was the easiest panel construction to fabricate. The individual hats had the least tendency to bridge in the junction between the hat web and the skin. Care was still required to obtain a tight layup and to avoid bridging of the nylon bag. The accurate location of the hat doublers was still a problem with this construction and fabrication method.

1.1.7 Wrapped Hat Stiffened Panel D

Figure 8 shows a design concept for a hat stiffened panel capable of carrying heavier load. This concept featured a "T" joint between the stiffener web and outer skin. Most panels made with the "T" joint also included extra build up in the upper cap section as shown in one of the hat stiffeners in Figure 8. The outer skin was layed up as in Section 1.1.4. The mandrels were wrapped with the fiber orientation and the number of layers of material specified on the Engineering drawing. There was 100 percent overlap across the base of the mandrel that contacted the outer skin. The wrapped mandrels were located on the outer skin. Additional material was layed up over the hat and onto the surface of the outer skin to form the attach flanges. This panel was then sealed under a nylon vacuum bag and cured in the autoclave.

Results

Good quality panels were made for this design and process as long as the cap build up remained below approximately 0.12 inch in thickness. Figure 9 shows a two hat stiffened specimen that has ends potted in epoxy casting material, Hysol TE4351. The ends have been machined flat and parallel in preparation for a compression test.

FIGURE 6. OVERLAP TWO SKIN HAT STIFFENED PANEL - PANEL B

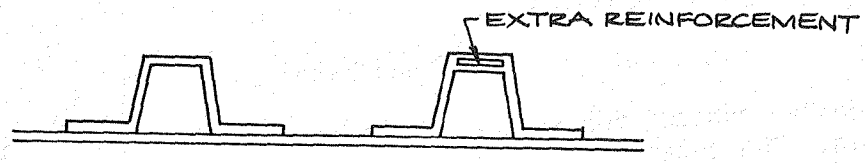

FIGURE 7. INDIVIDUAL HAT STIFFENED PANEL - PANEL C

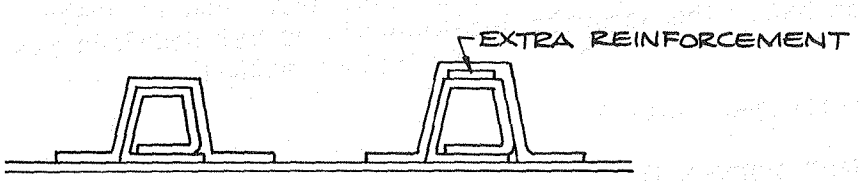

FIGURE 8. WRAPPED MANDREL HAT STIFFENED PANEL - PANEL D

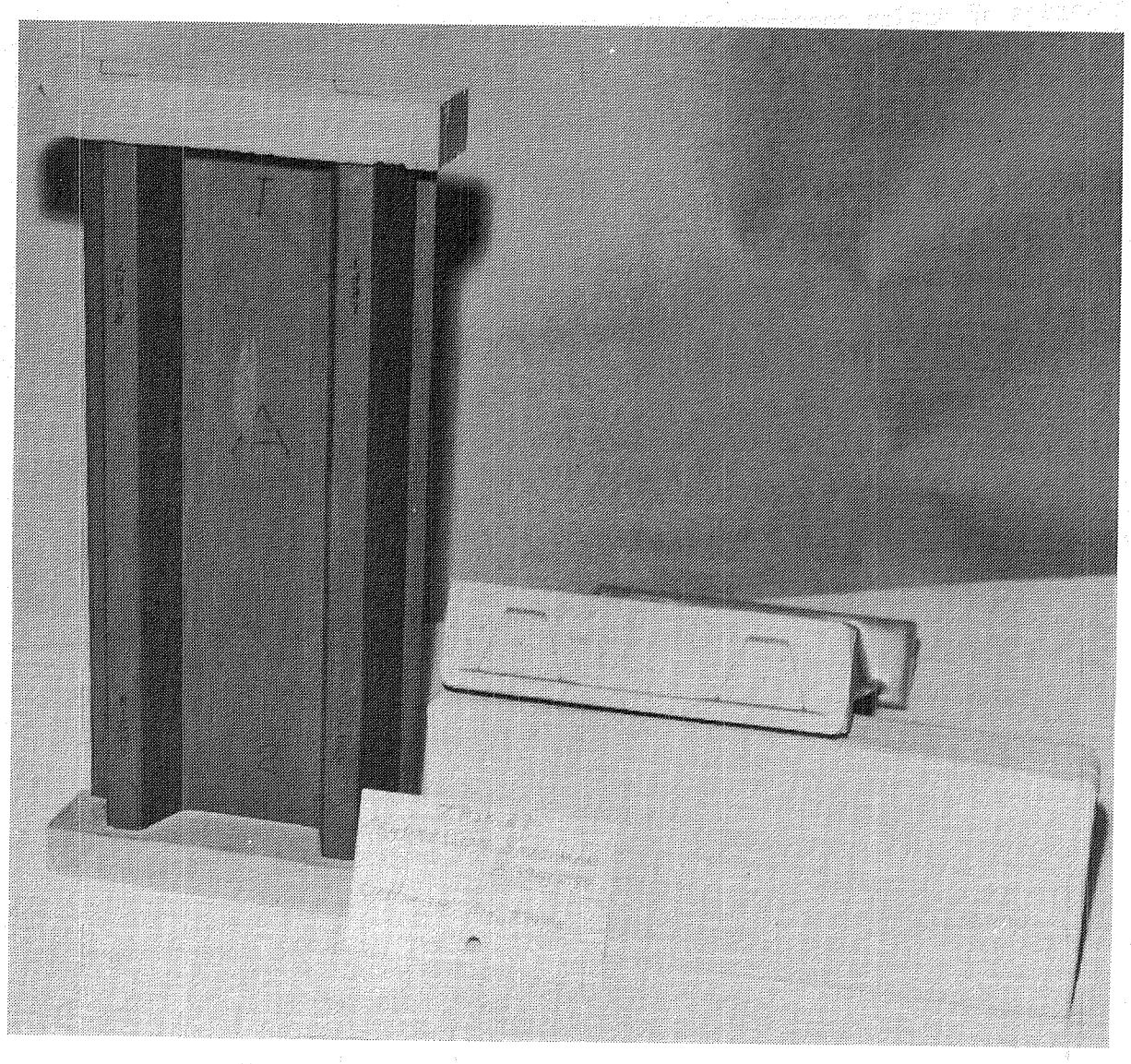

FIGURE 9. LIGHTLY LOADED HAT STIFFENED COMPRESSION SPECIMEN

1.2 HEAVILY LOADED HAT STIFFENERS

A series of design concepts for heavily-loaded hat stiffened wing panels were fabricated. The tooling for all of these panels consisted of a flat aluminum surface plate and a machined female aluminum mold on the hat side. Solid or inflatable removable mandrels were used for the internal surface of the hat members.

1.2.1 Tooling and Tool Fabrication

This section describes the tooling development and methods of making the tools for the thick hat stiffened panels.

1.2.1.1 External Tools

Almost all hat stiffened panels with cap doubler thickness over 0.12 inch were fabricated with a solid female mold on the hat surface and a flat metal top plate for the outer skin. (See Figure 10.) The most satisfactory female hat tools were machined from solid blocks of aluminum to the external dimensions required of the hats. Tooling materials considered, or tried and rejected were as follows:

Aluminum	Solid aluminum blocks with machined hat recessed shapes made the most satisfactory mold material. Good dimensional tolerance and surface finish were obtained using routine metal machining practice.
Steel	Steel as compared to aluminum, was very heavy, was more difficult to machine, and slower to heat up to curing temperature in the autoclave.
Graphite	Solid graphite was used for several parts in an effort to obtain exact dimensional stability during the curing cycle. The graphite blocks were limited in size, and the surface proved soft and was easy to damage. In addition, the mold release problem of part removal, without taking some graphite tooling surface with the part, was never completely solved.
Solid Laminate - Graphite or Fiberglass	Solid Laminate female hat recessed shaped, graphite/epoxy or fiberglass/epoxy materials, were considered. All panels required for this program were flat, and it was estimated that the solid aluminum machined tool would be lower in cost.

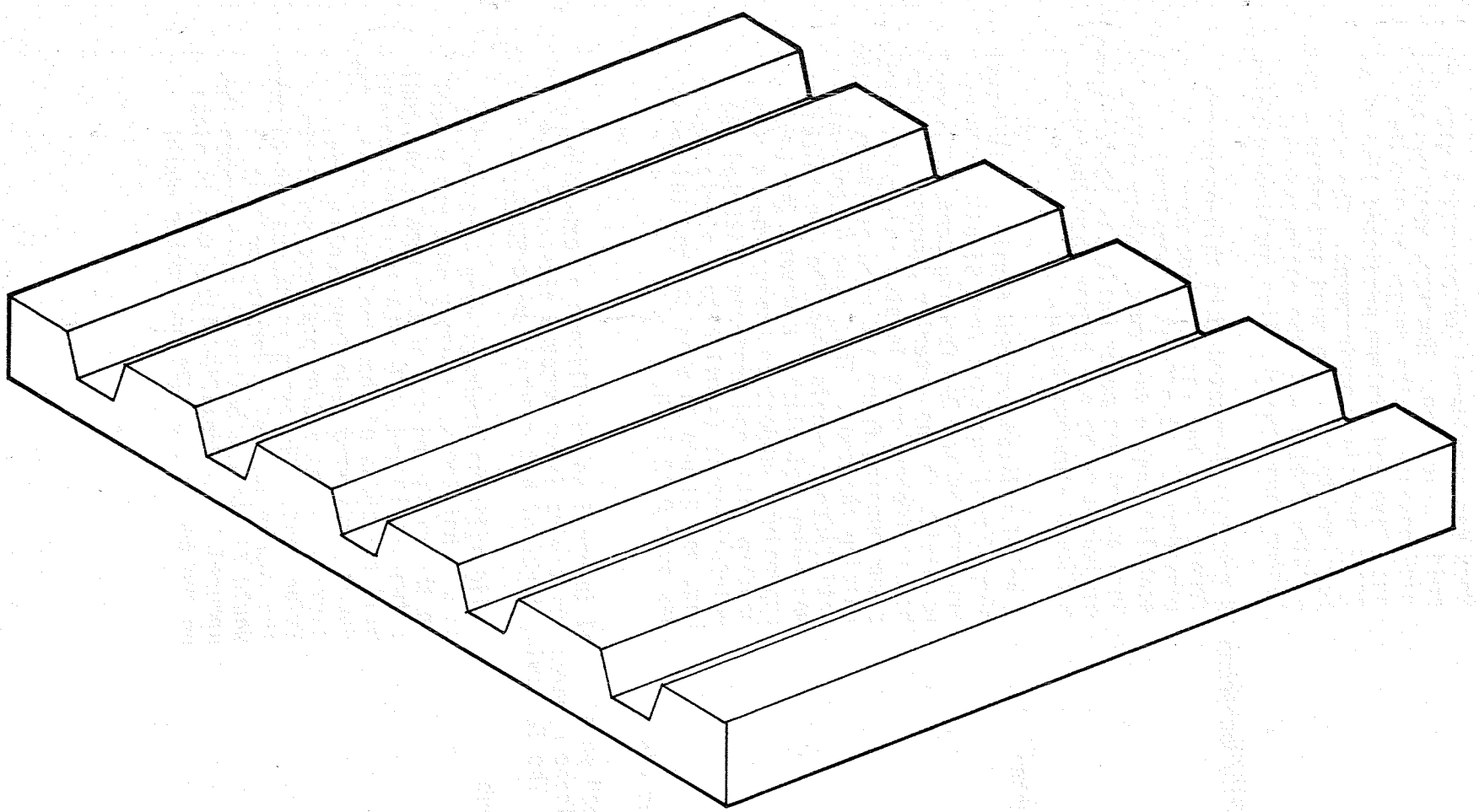

FIGURE 10. MACHINED ALUMINUM CAVITY MOLD

Wood

Wood was considered for potential ease of mold fabrication. However, wood was never used because of the danger of fire in an autoclave and minimum predicted life at a 350°F autoclave environment. The time required to seal the wood and obtain a good surface finish made the estimated cost higher than straight line machined aluminum.

Graphite Skin/Honeycomb

A graphite laminated-skin thin-honeycomb female tool for the hat side was considered. It offered dimensional stability and a fast cure heat-up ratio. Such a tool was never built, as the cost was estimated to be far higher than the direct machined aluminum tools.

Silicone Rubber

A solid silicone rubber female hat recessed shaped tool was cast from Silastic "J" as supplied by the Dow Corning Corp. Two wood mandrels, to the exterior dimension of the hat stiffener, were located on a plate with a surrounding frame and used as the mold for casting the tool. This type of tool made satisfactory panels when the cap thickness was below 0.12 inch. However, the tool was expensive, subject to damage, had a slow heat-up rate, and produced distorted cap reinforcements (similar to a simple vacuum bag, see Figure 2) when the cap thickness was over 0.12 inch.

1.2.1.2 Internal Mandrels

All thick hat stiffened panels used internal solid silicone or expanding or inflatable inner silicone mandrels that were later removed after the cure cycle was completed. The following types of hat mandrels were used.

Solid Silicone

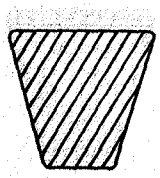

Solid silicone mandrels were cast in the female hat tools. A dummy part was placed on the walls and cap of the female hat tool between .010 and .020 inch thicker than the wall thickness of the final cured part. The dummy parts were made from tooling wax, aluminum sheet and/or pressure sensitive Mylar tape. The extra thickness was to make the rubber mandrel undersize so that it would fit to the bottom of the hat when the uncured and undensified layup was in place on the tool. The silicone rubber would

Solid Silicone - (Cont'd)

expand with heat to create the desired curing pressure. Silastic "J" from Dow Corning and Dapco Cast #1 yellow from "D" Aircraft Products are examples of acceptable silicone tooling materials. The steps of silicone tool and part fabrication are shown in Figure 11.

Hollow Silicone

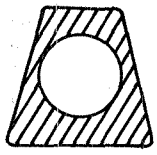

Hollow silicone mandrels were cast in the aluminum female hat tools in much the same manner as the solid silicone. The only difference was that an aluminum tube was located in the cavity prior to pouring the silicone rubber mandrel. The metal tube was removed after the mandrel was cured and before it was used to make the composite panels. See Figure 12 for detail of the fabrication steps of making this type of inflatable mandrel. Figure 13 shows the aluminum tubes and wood end blocks in place and ready to pour and cast the hollow silicone rubber mandrel.

Round Extruded Silicone Tube Mandrel

A round extruded silicone rubber tube was used as an inflatable mandrel. It was not successful for two reasons. First, the wall thickness and strength of the silicone rubber did not allow it to expand completely into the corners of the hat. Second, this mandrel did not offer any support to allow the "wrap around" mandrel lay up specified for several of the thicker panels.

Bonded From Flat Sheet Silicone Inflatable Mandrel

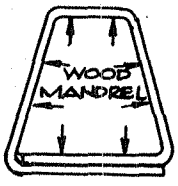

This inflatable mandrel concept was attempted in an effort to minimize the expansion required to obtain pressure in the internal corners of the hat. A wooden internal support mandrel was made, and the silicone rubber sheet was wrapped around the mandrel with 100% overlap and bonded on the outer skin side. The wooden block was removed after the graphite part layup was assembled on the panel tool and just prior to starting the cure cycle. The wooden blocks were easily removed when vacuum pressure was applied to the part. The vacuum caused the tubes to expand away from the blocks and to inflate against the walls of the panel in the female curing tool. The problems with this concept were the rough joint at the edge of the overlap bond, and the difficulty to bond uniform size mandrels and to make a tight wrap around layup.

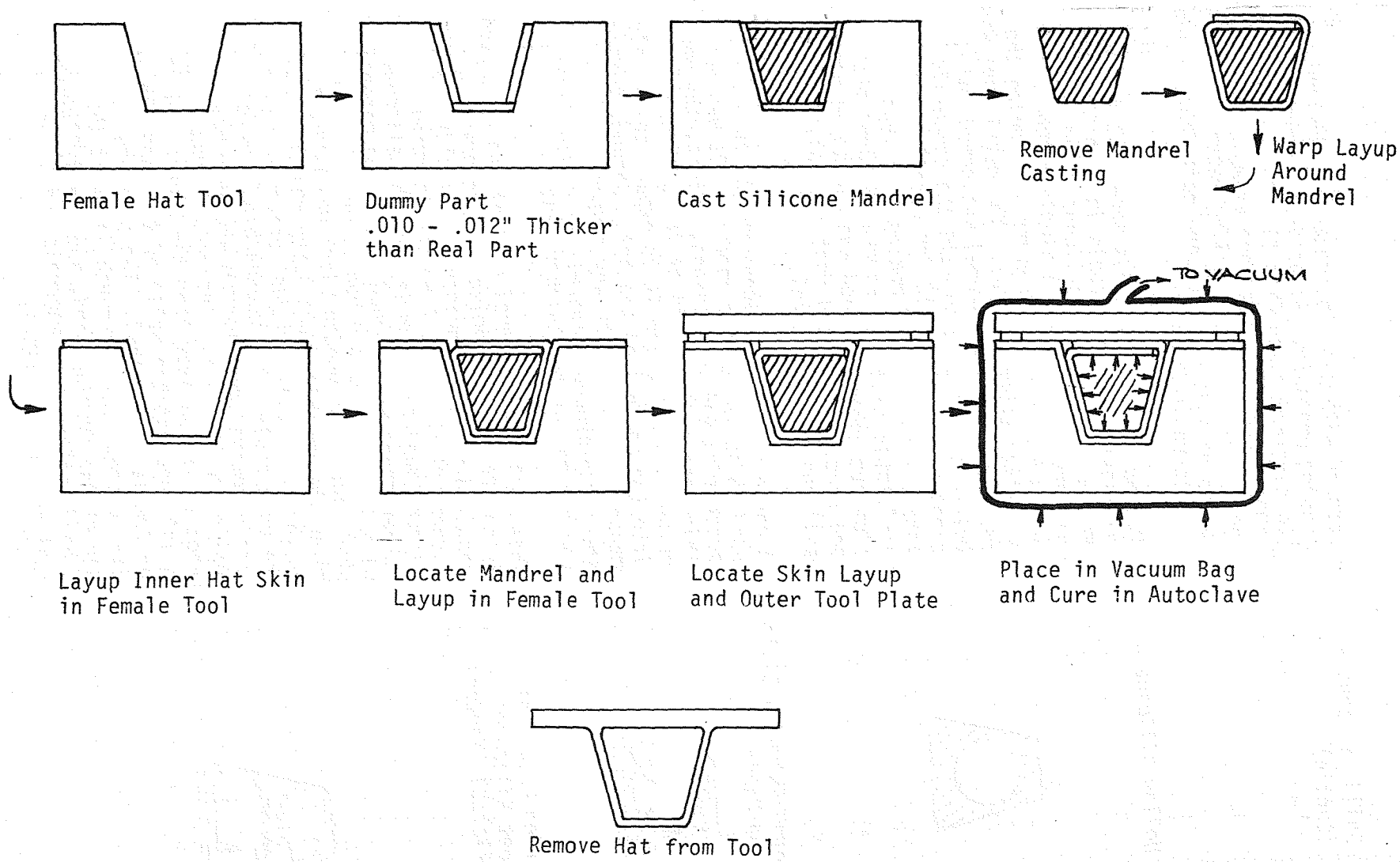

FIGURE 11. SOLID SILICONE INTERNAL MANDRELS

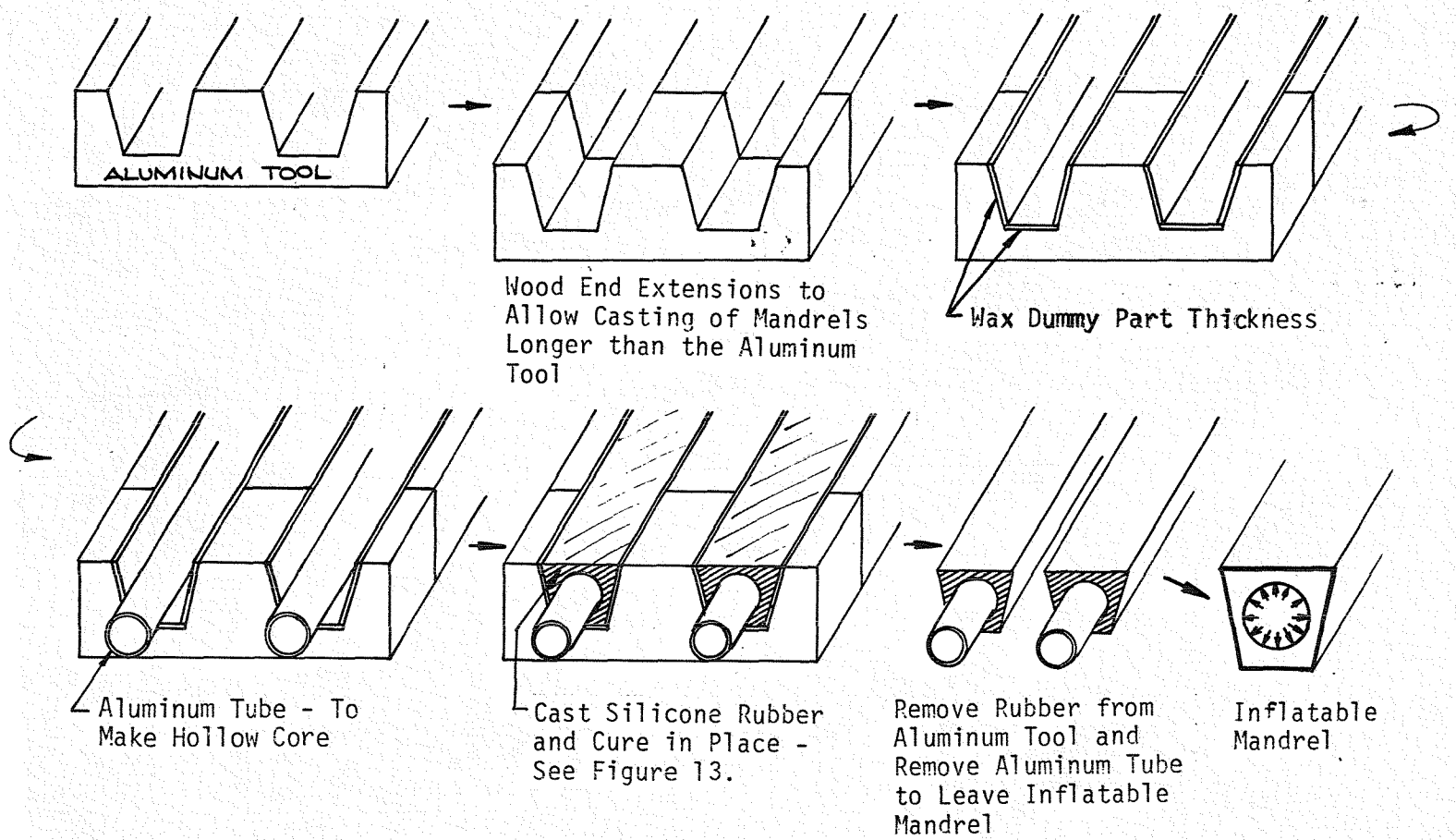

FIGURE 12. HOLLOW SILICONE INTERNAL MANDRELS

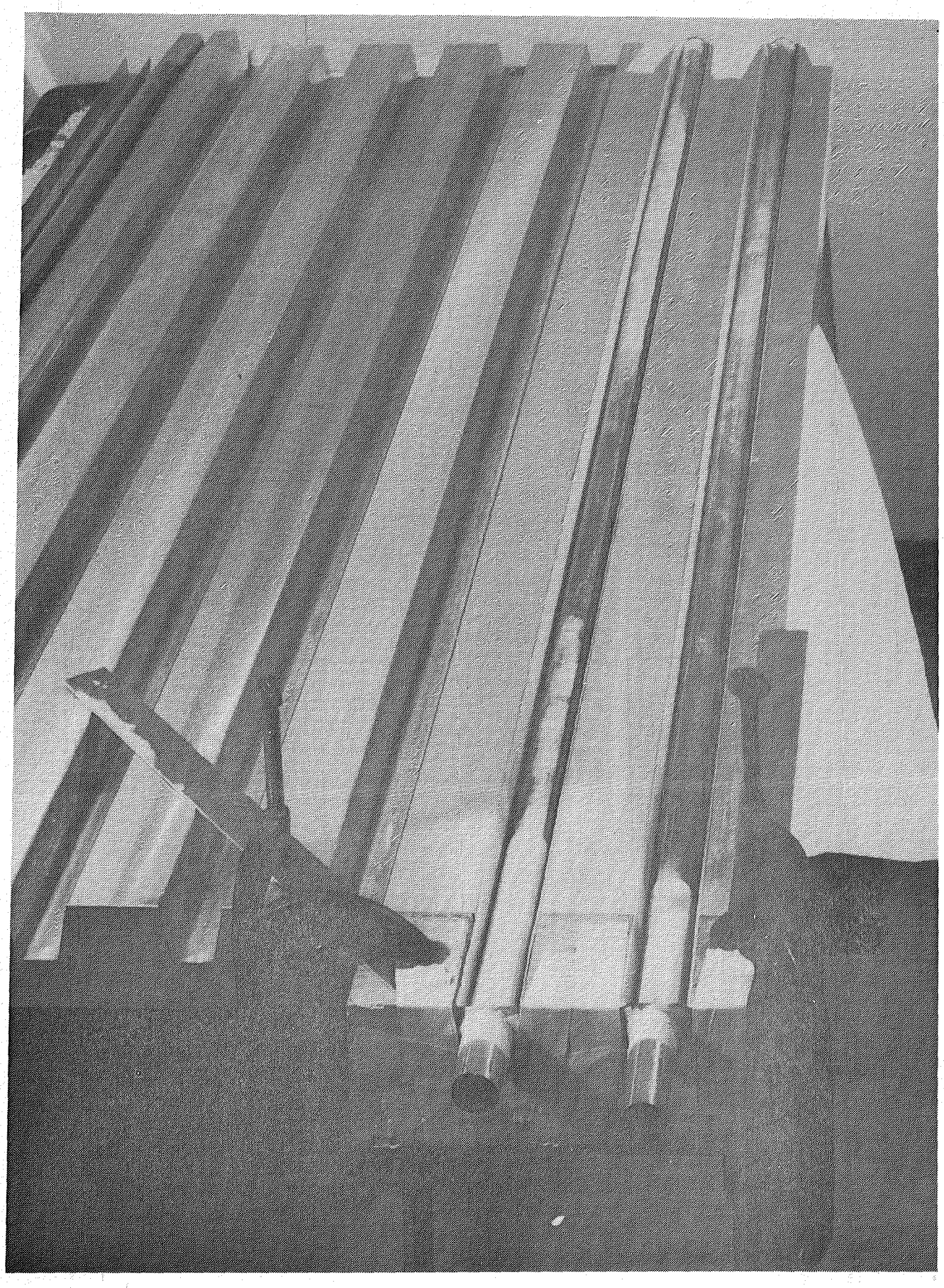

FIGURE 13. TOOLING READY TO CAST INFLATABLE MANDREL

Extruded to Shape Silicone

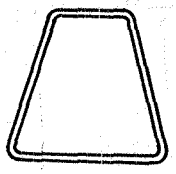

Standard rubber extrusion dies were made to extrude silicone rubber shaped tubes to the desired dimension and .060-inch-wall thickness. Dapco #250 yellow silicone rubber was used to manufacture the tubes. This mandrel was the most successful inflatable mandrel developed to date. There were no rough surfaces and no bonds to fail. The tubes were of uniform size and wall thickness. The extrusion die costs to extrude these mandrels were moderate, and the tooling fabrication time was short. The silicone extrusions were supported on wooden mandrels during the lay-up procedure, and all other fabrication steps were similar to the bonded mandrel process.

1.2.2 Thick Hat Stiffened Design Concepts

Many configurations of thick hat stiffened panels were designed and fabricated. The variations included extra materials in the upper and/or lower doubler caps, location of overlaps of individual plies, number of plies, and orientation of plies, spacing and depth of hats. Figure 14 shows the cross-section detail of a typical panel fabricated for this program.

1.2.3 Typical Hat Lay-Up Patterns - Medium-Loaded

Medium-loaded hat stiffened panel dimensions, number of plies and ply orientations varied greatly, but most of the hat stiffeners were layed up by one of the following methods shown in Figure 15. The differences in lay-up procedure are identified, and comments on the difficulties encountered and the resultant quality of the panels are noted.

1.2.3.1 Continuous Material Layup

In all cases aluminum tools were machined with female recess for the hat stiffeners. The inner portion of the skin, the webs, and caps of the hats were layed, ply-by-ply, left to right, on and into the aluminum tool as continuous single sheets of "B" stage material. Solid silicone mandrels were located in each mold cavity.

Many hat stiffened panel designs that did not require a mandrel wrap around layer for the hat web, still required a "T" joint between the web of the hat and the outer skin. Typical of this design were lower strength panels without extra cap doublers but with fiberglass angle reinforcement between web and skin. (See Figure 15A.) A 1/2 inch wide strip of 181 style "B" stage fiberglass cloth was folded to an angle with 1/4 inch legs and inserted at all web-to-skin intersections. The fiberglass strip angles were inserted after the hat layers were in the tool and the tooling mandrels were in location. The fiberglass installation was the last lay-up operation prior to location of the outer skins.

This concept was difficult to lay up without bridging in the concave corners of the joints between the webs and the cap. The bridging caused voids or porosity in these areas.

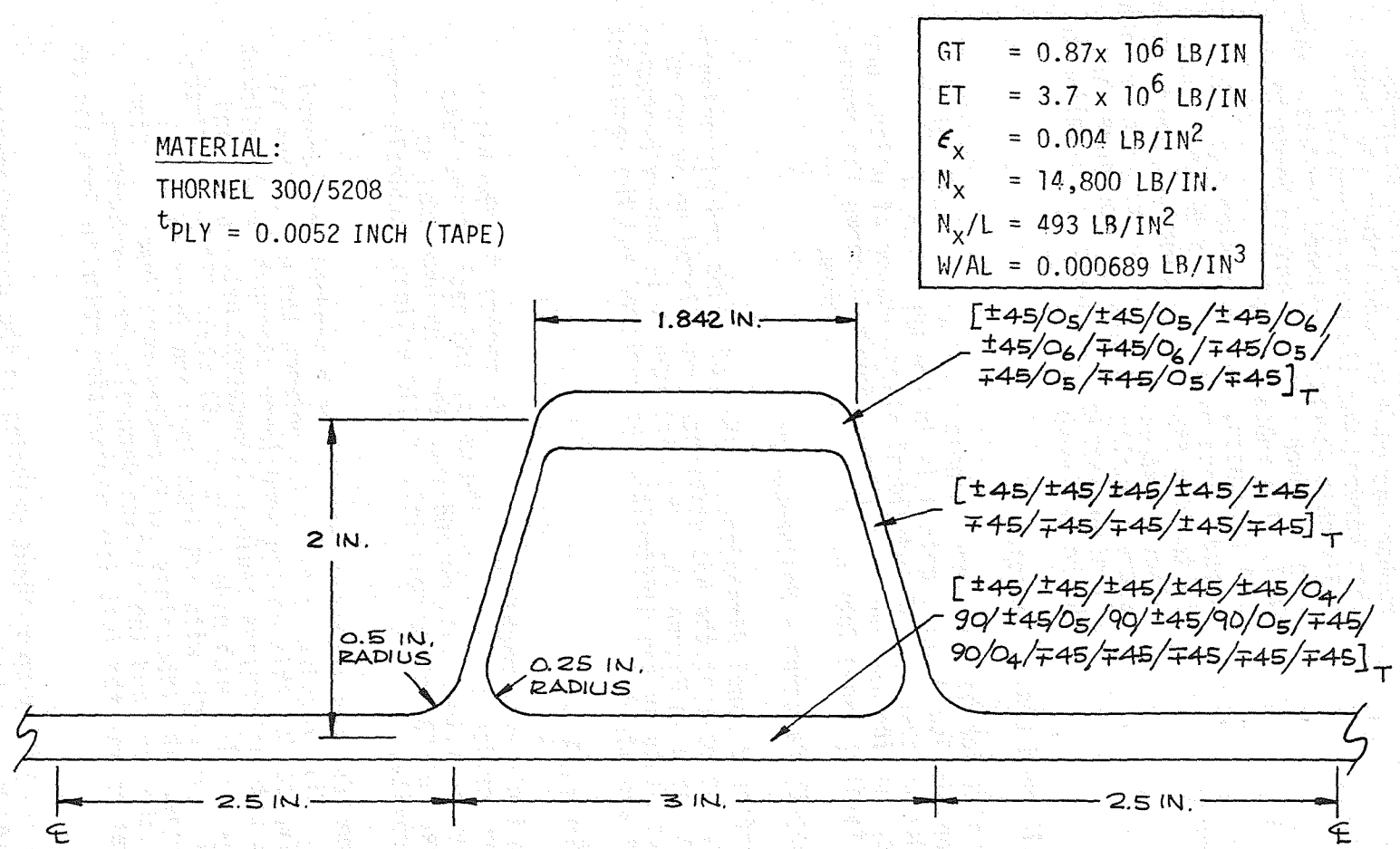

FIGURE 14. TYPICAL MEDIUM LOADED HAT DESIGN

A.

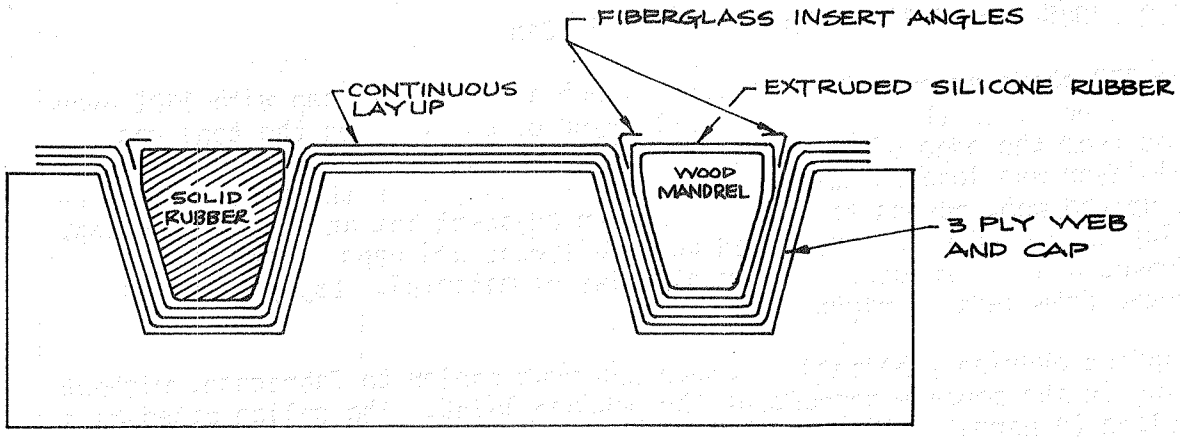

Difficult to Layup in Concave Corners

B.

100% Overlap at Splice in Each Cap

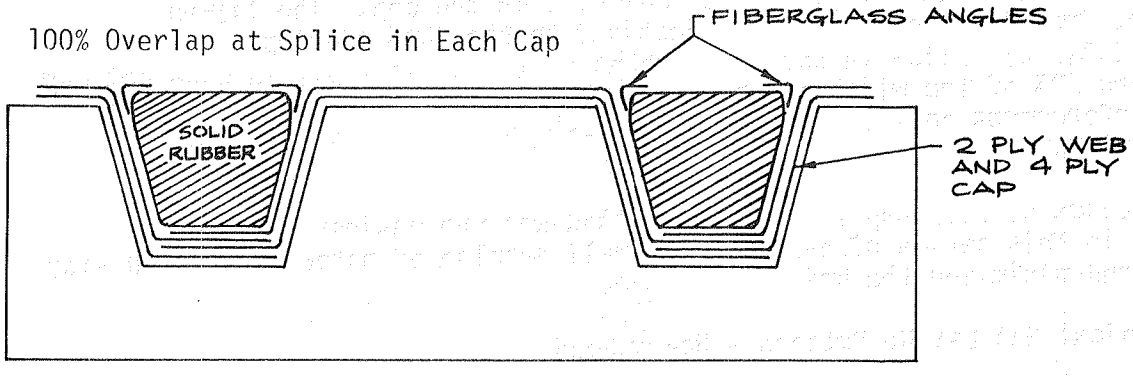

Better Layup in Concave Corners
Layup of Sections from Left to Right

C.

50% Overlap at Splice in Each Cap

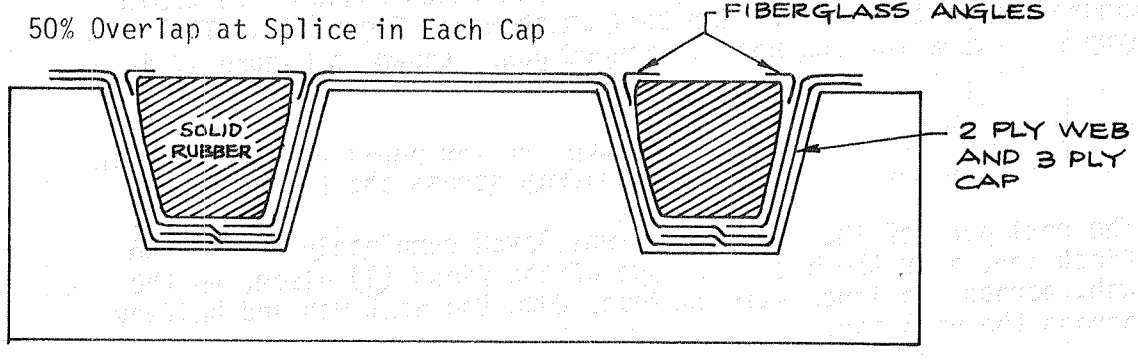

Best Layup in Concave Corners
Layup of Sections from Left To Right

FIGURE 15. TYPICAL LAYUP METHODS FOR MEDIUM LOAD

1.2.3.2 100% Material Overlap at Splice in Cap

Figure 15B shows an example of a two-ply web and four-ply cap with 100% overlap of material in the cap. The first layer of material on the tool was located from the edge of the panel down the web and across the hat cap. The second layer was located across the cap of the hat, over the first ply in this area, up the web, across the skin, down the adjacent hat and across the cap. This lay-up procedure was repeated until all webs and caps of the hat stiffeners had the required number of plies of material. Layup always proceeded from left to right.

This splice overlap fabrication method was much easier to fabricate, without bridging in the concave corners of the web/cap joint. The splice acted as a slip plane to permit a tight nonbridged layup.

1.2.3.3 50% Material Overlap at Splice in Cap

Figure 15C shows an example of a lighter weight structure with a two-ply web and three-ply cap with 50% overlap of material in the cap. The lay-up procedure, from left to right, was identical to the 100% overlap (Section 1.2.3.2) splice in the cap, except that the first ply in each hat cap only covers 50% of the width of the cap. These panels also had one-ply fiberglass reinforcement angles at each skin-to-web joint, as described in Section 1.2.3.2.

The 50% splice overlap cap fabrication method was the easiest design to fabricate in this series of panels. The small overlap of material allowed easy slippage and minimized the bridging problem.

1.2.4 Typical Hat Lay-Up Pattern - Heavy Load

Heavily-loaded hat stiffened panels also varied in the details of dimensions, number and orientation of plies, spacing and depth of hats. Typical heavily-loaded hat stiffener type panel details are shown in Figure 16. Along with the use of an aluminum female tool, the same detail of panel layup was required for both a solid rubber mandrel and an extruded hollow inflatable silicone mandrel supported on a wooden tool as shown in Figure 17. The step by step layup procedure for the heavily-loaded panel shown in Figure 17 is as follows:

1. The first ply was layed from the edge of the panel across the skin, down the web and, in this case, halfway across the first cap.

2. The next part of the first layer was layed completely across the first cap, over the half coverage of the first 1 piece, up the web, across the inner skin surface, down the next web and halfway across the next cap.

3. A 0° fiber orientation reinforcement ply was layed the width and length of the first cap over that portion of the 2 ply.

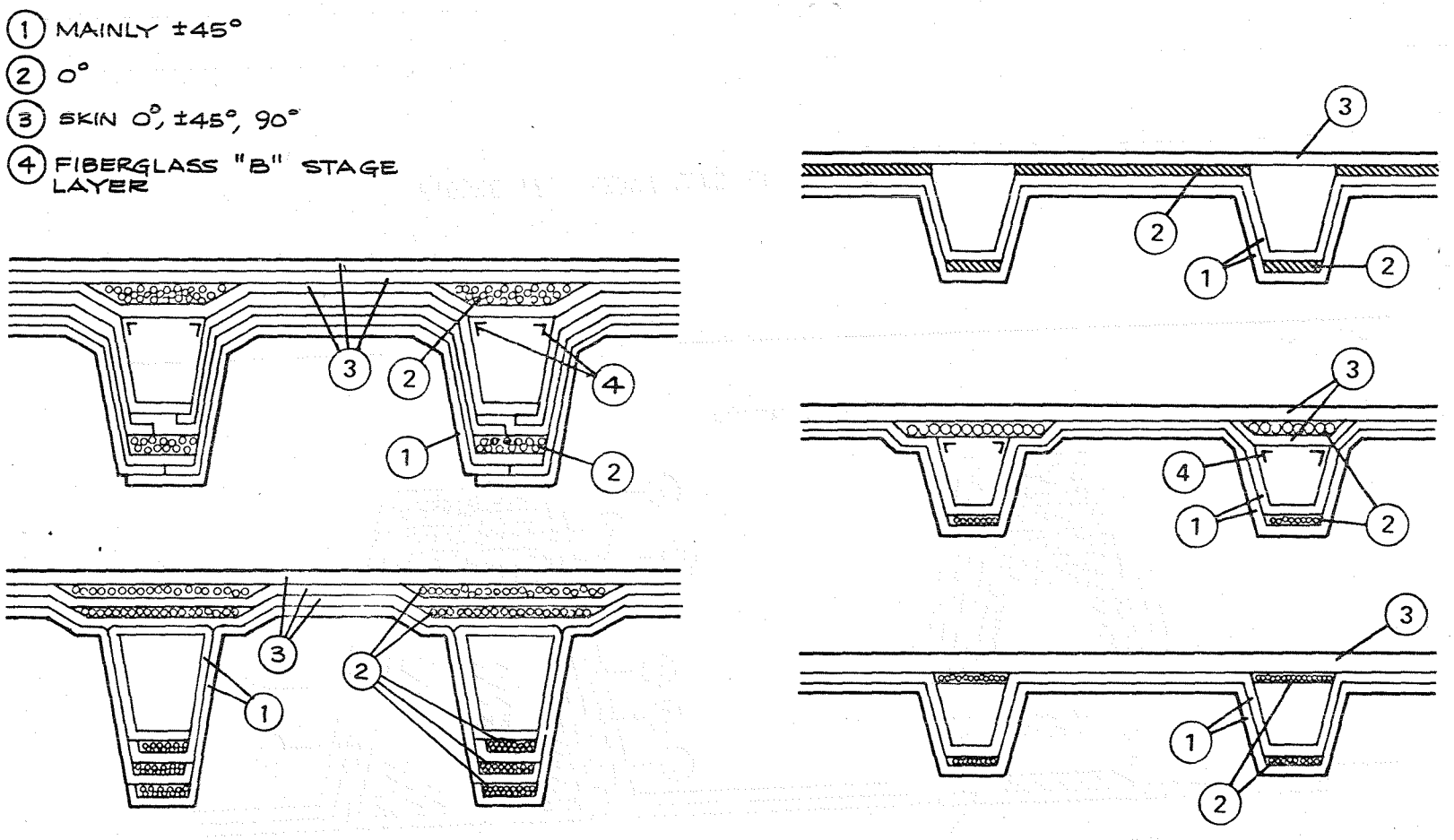

FIGURE 16. TYPICAL HEAVY LOAD HAT STIFFENED PANEL CONCEPTS

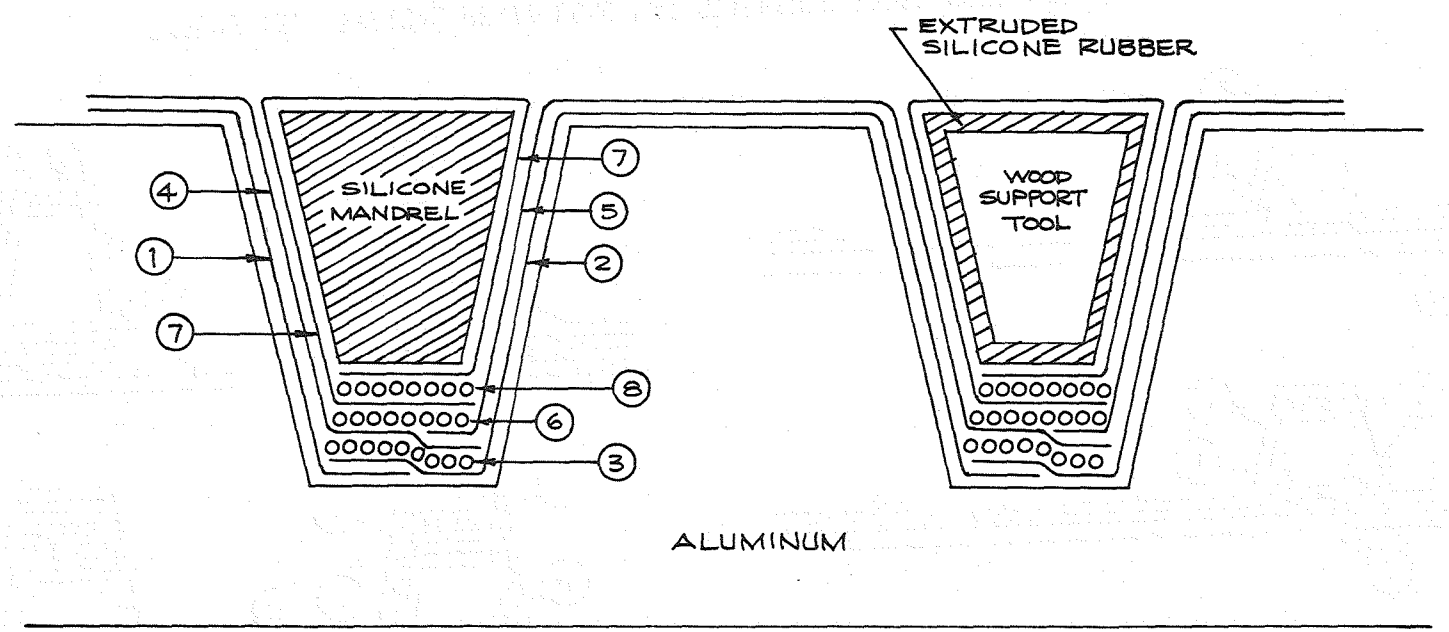

FIGURE 17. HEAVY LOAD WRAP AROUND WEB

④ The second layer was started from the edge of the panel and layed over the ① ply across the skin, down the web, and completely across the first cap.

⑤ The next part of the second layer was started halfway across the cap, up the web, across the inner skin surface [over ②], down the next web, and completely across the next cap.

⑥ A 0° fiber orientation reinforcement ply was layed the width and length of the first cap and over this portion of the ④ and ⑤ details.

⑦ One layer of material was wrapped around the mandrel, starting across the cap, up the web, across the base of the hat mandrel, back down the web and over, in this case, a 0° fiber orientation reinforcement ply ⑧ that had been placed on the first portion of the wrap around ply across the cap. The wrapped mandrel was then placed into the female cavity ready for the next processing step.

The general step-by-step assembly sequence used for this type of wrap-around hat stiffened panel is shown in Figure 18. This entire lay-up assembly was then placed in a vacuum bag and processed through an autoclave heat and pressure curing cycle.

A

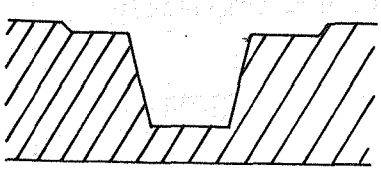

Aluminum Female Tool.

B

Silicone Mandrel. Wrap Layers Around Mandrel With 100% Overlap In Cap And Extra 0° Reinforcement In Cap.

C

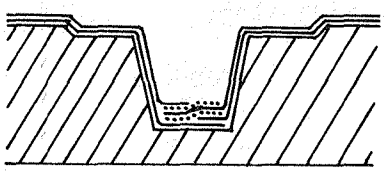

Layup Two Plies Of Skin, Web And Cap With Two Extra Plies Of 0° Reinforcement In The Cap, on The Aluminum Tool. 50% overlap of skin in cap is shown in "C".

D

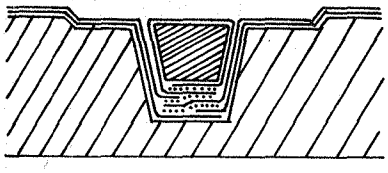

Locate The Wrapped Silicone Mandrel Detail, From B, Into The Female Cavity In The Aluminum Tool.

E

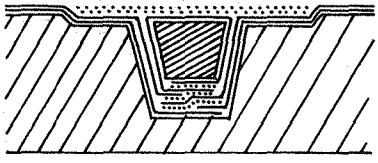

Layup The Skin Doubler To The Prescribed Fiber Pattern Over The Inner Skin And Mandrel Details Already On The Aluminum Tool.

F

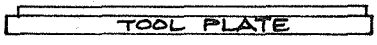

Layup Outer Skin On Flat Tool Plate

G

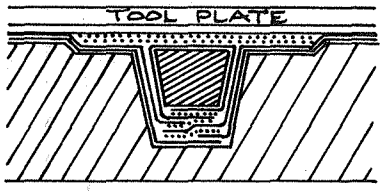

Invert Outer Skin Layup And Tool Plate Over Inner Skin, Doubler And Stiffener Tool

The Panel Is Now Ready To Bag And Cure In The Autoclave

FIGURE 18. WRAP AROUND HAT LAYUP PROCEDURE

1.2.5 Typical Bagging Procedure for Solid Hat Mandrels

The skins for the lightly-loaded solid hat mandrel panels were layed up on flat tool plates. The mandrels were placed over the skins, and the hat stiffened portion of the layups were completed. A layer of Armalon separator film was cut and placed over the layup with approximate 1/4 inch overlaps at the concave intersection between the panel skin and web of each hat. Fiberglass Style 181 or Mochburg bleeder material was placed over the Armalon at a ratio of one ply per four plies of graphite tape or one ply per two plies of woven graphite cloth. The bleeder material was also cut and overlapped 1/4 inch at the concave hat web-to-skin intersection. A standard nylon bagging film was then placed over the entire assembly and sealed around the periphery of the tool using Schnee Morehead #9241 bag sealant. "Ears" or loops were placed in the bag material at each concave hat web-to-skin intersection. See Figure 19. Great care was taken to always minimize or eliminate bridging in these concave areas during part layup, location of Armalon, bleeder material, and nylon bag. This assembly and procedure was mandatory to insure a good quality panel.

The heavily-loaded panels were also fabricated using the standard nylon film as a bagging material. The heavily-loaded panels were made with the use of female hat molds, flat tool plates for the outer skin, and solid silicone rubber mandrels to support the hats. All details of layup were predensified as flat panels and later formed to shape. Therefore, no bleeder material was used during the final cure. The layup and mold sections were all assembled. Pressure sensitive tape was located around the edges to cover the gap between the aluminum hat tool and the skin tool plate to control resin flow. Breather fiberglass cloth was placed completely around the tool, and then the nylon bag was placed over the part. The bags were either placed over the outer skin tool plate and sealed to the female hat side tool or the complete set of tools and part were envelope wrapped as shown in Figure 20.

1.2.6 Typical Bagging Procedure for Inflatable Hat Mandrels

Panel layup and assembly for solid mandrel and for inflatable mandrel tooling were similar. The hat/web details were layed into the female hat mold, the wrap around details of the hat were layed on the inflatable mandrel (with wood internal support) and then inserted into the female hat mold, and finally, the outer skin was layed in position and the outer skin tool plate located into position. Fiberglass breather cloth was laid over the upper tool plate and down to contact the inflatable mandrels. The upper and lower nylon vacuum bag components were then located on the part as shown in Figures 21 and 22. Note that the inflatable silicone rubber mandrels extended three to four inches past the end of the aluminum tooling and the wooden support tools extended another three to four inches past the silicone inflatable mandrels. This extension was to allow the wood to be pulled easily from the rubber mandrels after vacuum was applied, but before start of the curing cycle. The extra length also allowed the silicone rubber mandrels to be grasped and pulled from the panel after completion of the curing cycle.

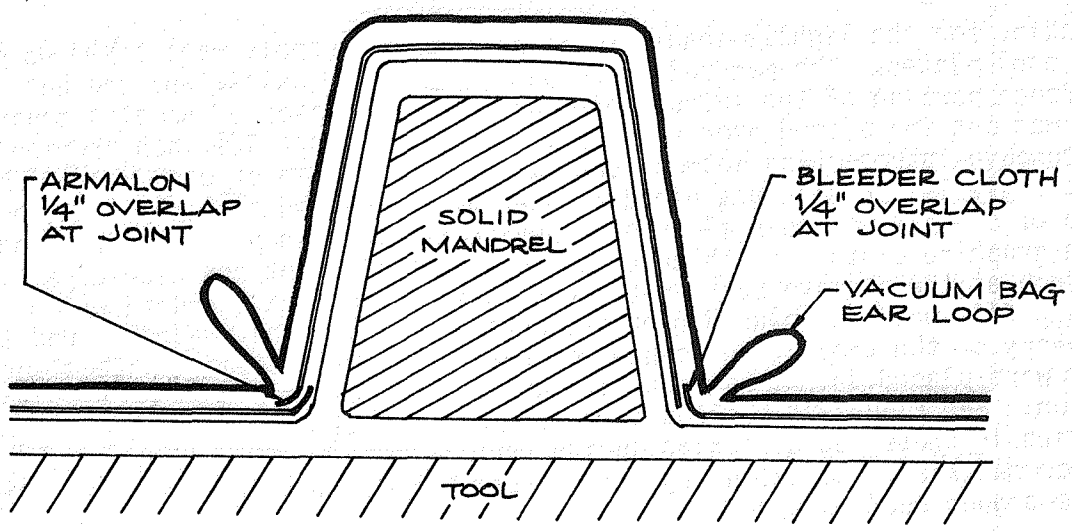

FIGURE 19. NYLON FILM BAGGING PROCEDURE WITH SOLID MANDRELS

One Side Bag Sealed
To Female Hat Tool

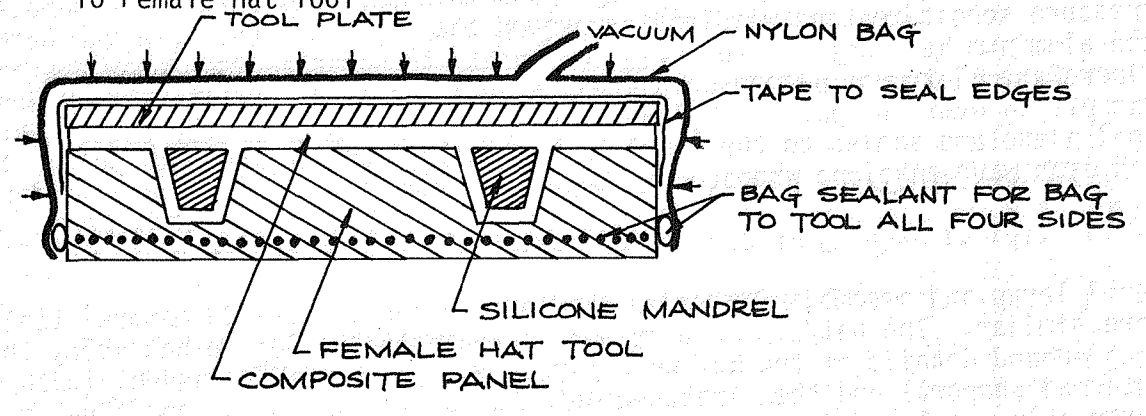

Envelope Bag

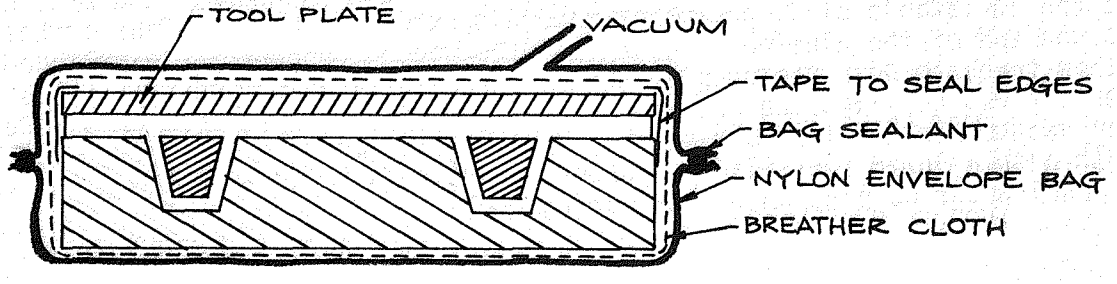

FIGURE 20. ONE SIDE BAG AND ENVELOPE BAG

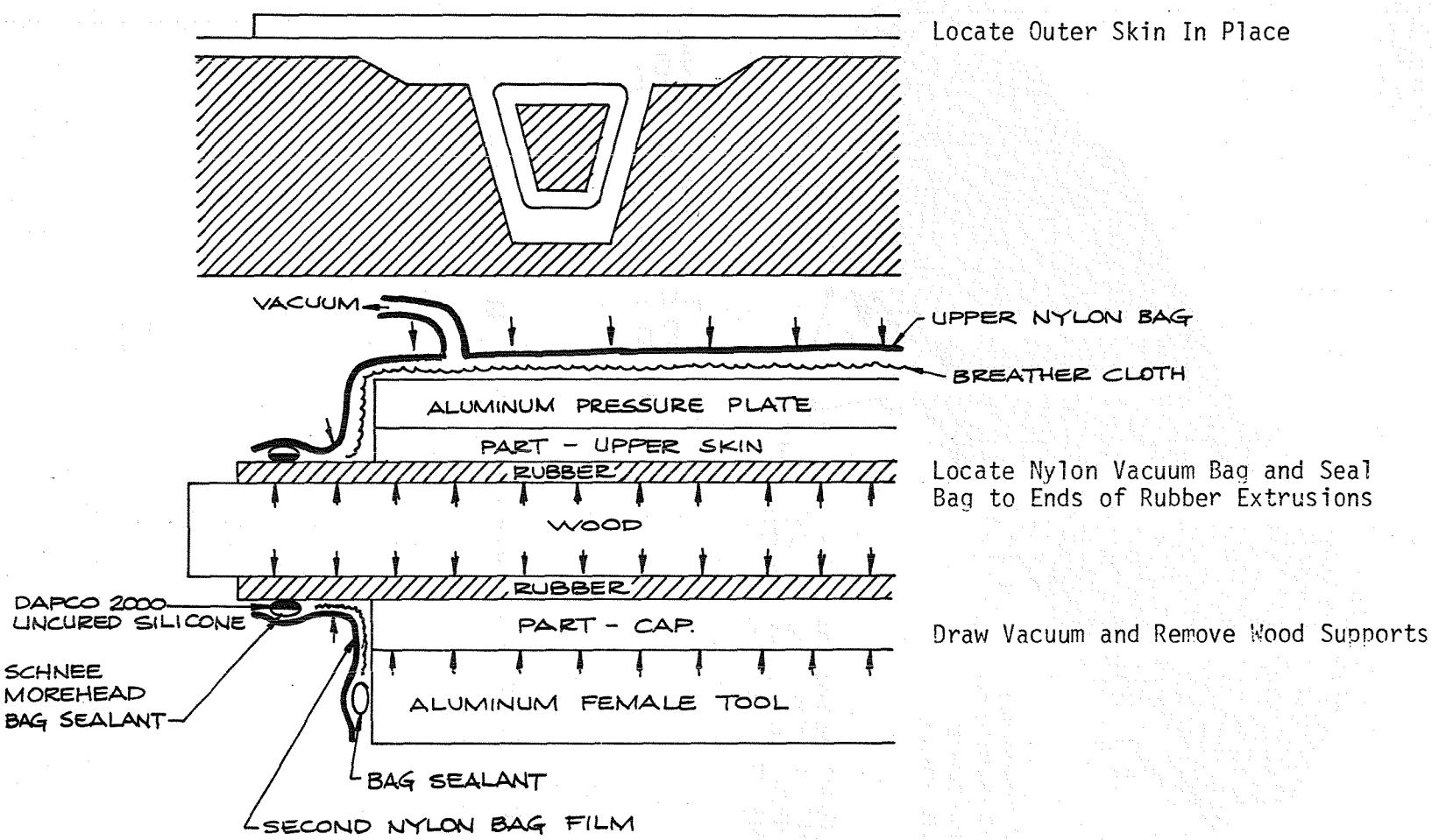

FIGURE 21. BAG PROCEDURE FOR INFLATED MANDREL CONCEPT

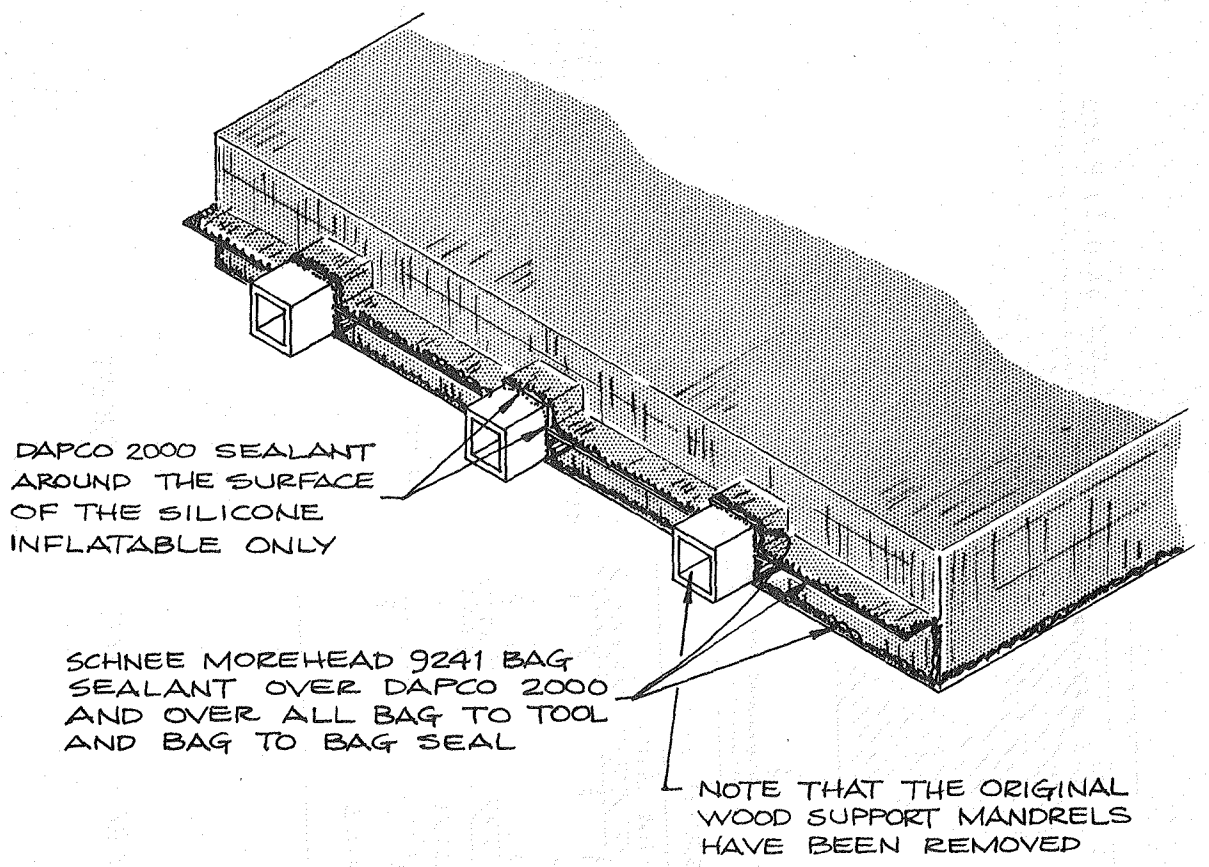

FIGURE 22. VIEW OF INFLATABLE MANDREL BAG SEAL METHOD

The upper sheet of nylon bag film was layed over the breather cloth on the outer skin aluminum pressure plate and was sealed to the silicone rubber inflatable mandrels and to a lower sheet of nylon bag film. The lower sheet of nylon bag film was sealed to the lower aluminum female hat tool to the upper nylon bag film and the remaining sides of the inflatable mandrels. The silicone inflatables were scuff sanded and cleaned with MEK prior to application of a bead of "D" Aircraft Company's Dapco seal #2000 in the contact area for the vacuum bag seal. Schnee Morehead #9241 bag seal was then located over the Dapco seal #2000 on the inflatable mandrels and on the mating surfaces of the first and second nylon bag film. The nylon bags were then sealed to themselves and to the inflatable mandrels. Very careful testing was required to be sure there were no bag leaks when vacuum was drawn. The wood mandrels were easily removed before the start of the curing cycle.

This vacuum bag process was tedious, costly, and prone to developing bag leaks as the materials became hot during the curing cycles. The nylon bag material tended to shrink and pull, and the bag sealants did not have much strength. Excess nylon bag was required with frequent ears to allow for this shrinkage and not have the bag pull from the seal. The most critical time for loss of the vacuum bag was after the 250°F temperature dwell and when 100 psi autoclave pressure was applied. The joint would tend to stretch and break the seal.

Although the process worked, it did present potential bag loss problems, and more reliable bagging material and techniques should be developed for this method of fabrication.

1.2.7 Fabrication of Hat Panel With Formed Silicone Bag, Panel A

A typical hat panel design for medium load carrying ability is shown in Figure 23. It consisted of an outer skin, a continuous contour inner skin hat web/cap shaped detail, and added upper and lower hat cap reinforcement. The step-by-step layup procedure for this panel, (see Figure 23), is as follows: (1) The lower or outer portion of the skin was layed up, ply-by-ply, on a flat tool plate. (2) The lower cap build-up doublers were layed up on the lower skin. (3) The solid silicone rubber mandrels were coated with mold release and located onto the doubler reinforcements. (4) The first half of the inner portion of the skin was layed up, ply-by-ply, over the lower skin and over the solid rubber hat mandrels. (5) The upper cap build-up doublers were layed up in the prescribed orientation and location. (6) The second half of the inner skin was layed up, ply-by-ply, over the (4) skin and (5) upper cap to complete the assembly.

Bagging Procedure

The first panel of this type was placed under a conventional nylon vacuum bag with the bag sealed to the skin tool plate.

The second panel of this type was placed under a 1/4-inch thick formed to shape silicone rubber vacuum blanket. The blanket was made on a wooden duplicate part from calendered silicone rubber stock DAPCO #250, and cured under a conventional nylon vacuum bag in an oven. The formed silicone blanket was located over the part and was sealed around the edge of the blanket to the tool plate. A round silicone rubber closed cell foam extrusion was forced under the rigid Z channel to create a vacuum tight seal of the bag to the tool. (See Figure 24.)

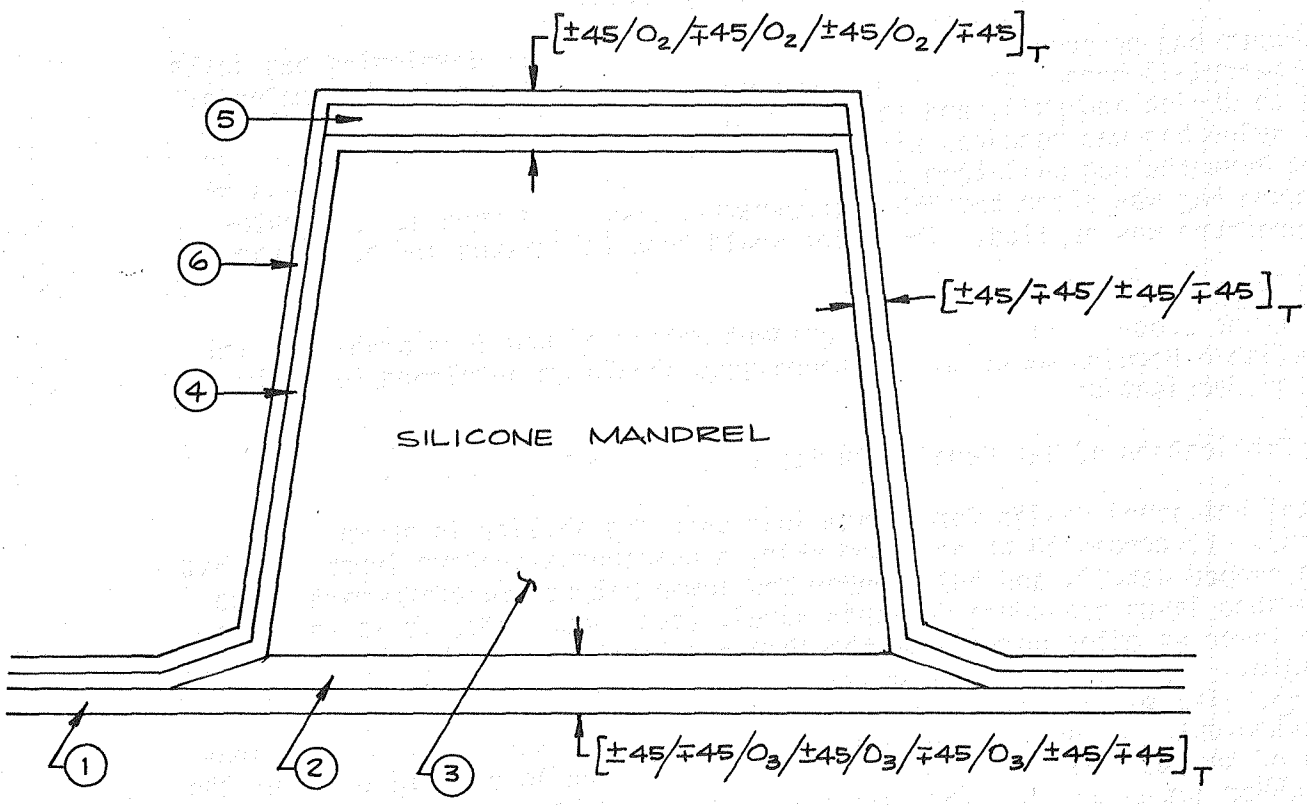

FIGURE 23. TYPICAL MEDIUM LOADED HAT STIFFENED PANEL "A"

A. FORMED SILICONE BAG

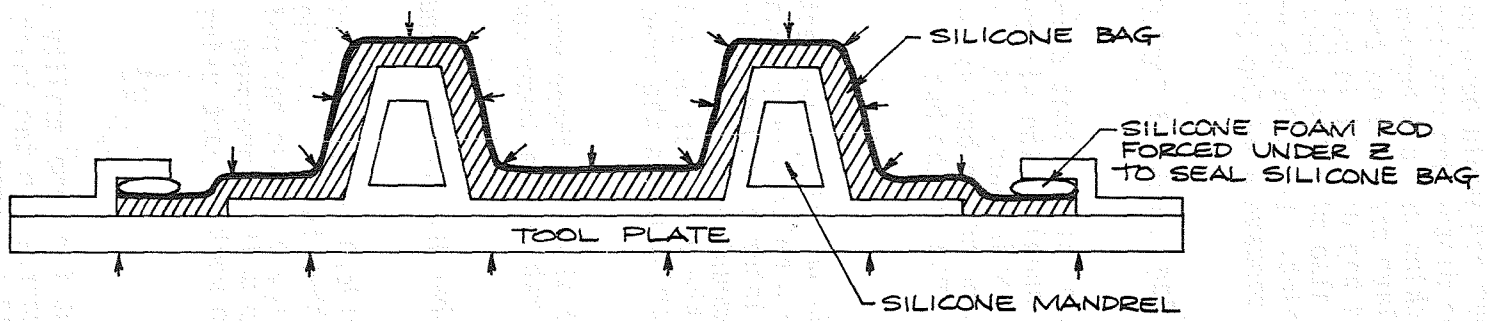

RESULTS

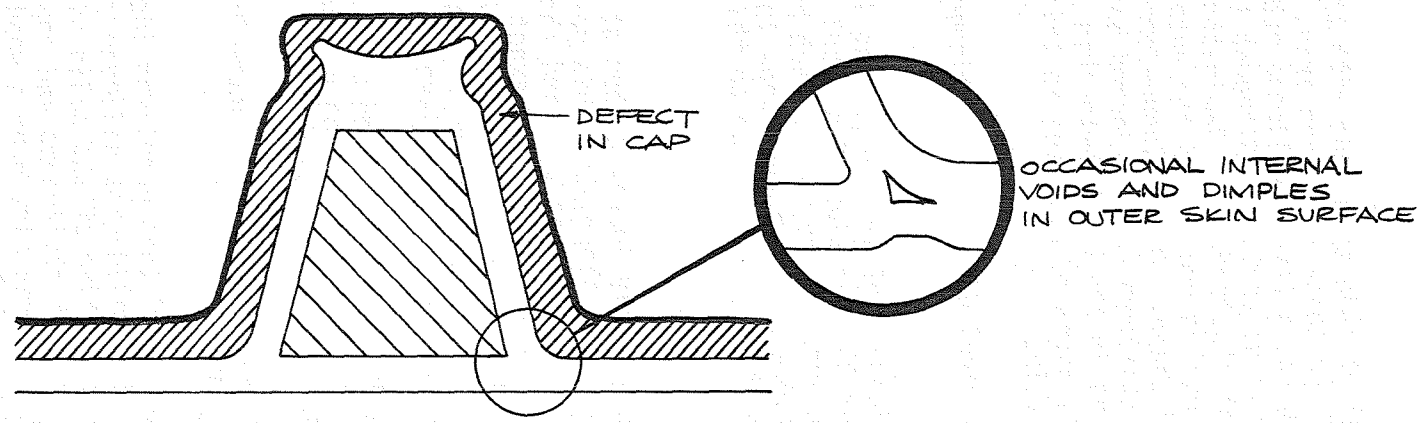

Soft Thick Cap Buildup Deformed Under Pressure
Before Resin Cured

FIGURE 24. PANEL A HAT STIFFENED PANEL CURED UNDER FORMED SILICONE PRESSURE BAG

Results

The first stiffened panel of this type made with the nylon bag demonstrated the severe distortion of the thick upper cap area. (See Figure 24.) It was planned that the 1/4-inch thick formed silicone rubber bag would have enough integrity to eliminate this distortion. Although the distortion was less, it was still completely unsatisfactory. The laminated skins and cap became very soft at the start of the curing cycle, and the autoclave pressure on the soft bags forced the distorted shape. The silicone-formed bag did aid in holding good location of the hat stiffeners. The formed bag also minimized, but did not eliminate, void defects in the hat web-to-skin joint. It would be very difficult to eliminate all signs of bridging in this concave area for this type of continuous inner skin.

1.2.8 Fabrication of Hat Panel With Formed Silicone Bag and Metal Tool Cap Panel B

The construction and fabrication of this panel was identical to that described in Section 1.2.7 except for the addition of a metal channel in the silicone rubber pressure bag in the area of the cap of each hat stiffener. (See Figure 25.) The object of the metal channel caps in the rubber bag was to stiffen the bag to give and hold proper shape to this area of the hat.

Results

The quality of the caps was greatly improved, but still not always perfect. The metal channel caps held their shape, but this gave a matched mold area and thickness effect between the channel cap tool and the interior solid silicone mandrel. It was almost impossible to trim the exact amount of prepreg material in this area to just fill, and not over fill the area. In addition, the tolerance variable of thickness/ply of prepreg material makes the exact volume requirement even more difficult to achieve.

Aside from the frequent joggles of the unfilled area of the cap, there were also occasional joggles or wrinkles in the area of the web at the lower edge of the tooling cap channels. (See Figure 25.)

1.2.9 Fabrication of Hat Panel With Solid Silicone Rubber Hat Mandrels and Female Hat Side Tool Panel C

The construction and fabrication of this panel was identical to that described in Section 1.2.7, except for the solid cast silicone rubber female hat side tool. (See Figure 26.) The objective of the solid silicone female hat mold was to hold the location of the hat stiffeners and apply uniform pressure during cure. The female hat mold was cast over a wooden mock up part using Dow Corning Silastic "J" RTV material.

Results

The quality of the panel skins and hat caps were of about the same quality as panels made as in Section 1.2.7. The same distortion occurred in the thick cap sections (above 0.12 inch). The trapped Silastic "J" silicone rubber from the female mold expanded and distorted the soft cap areas at the early part of the curing cycle before the resin could gel and produce a rigid surface. The addition of the metal channel as a tooling aid in the cap area behaved in an identical manner as in Section 1.2.8 (improved but not high panel quality).

B. FORMED SILICONE BAG WITH
METAL PRESSURE CAP

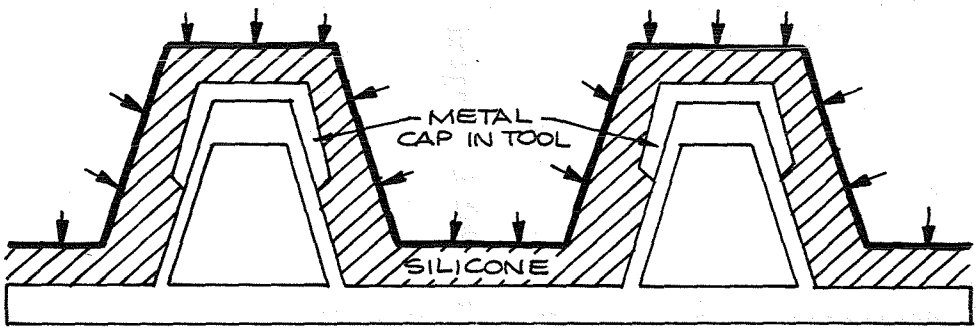

RESULTS

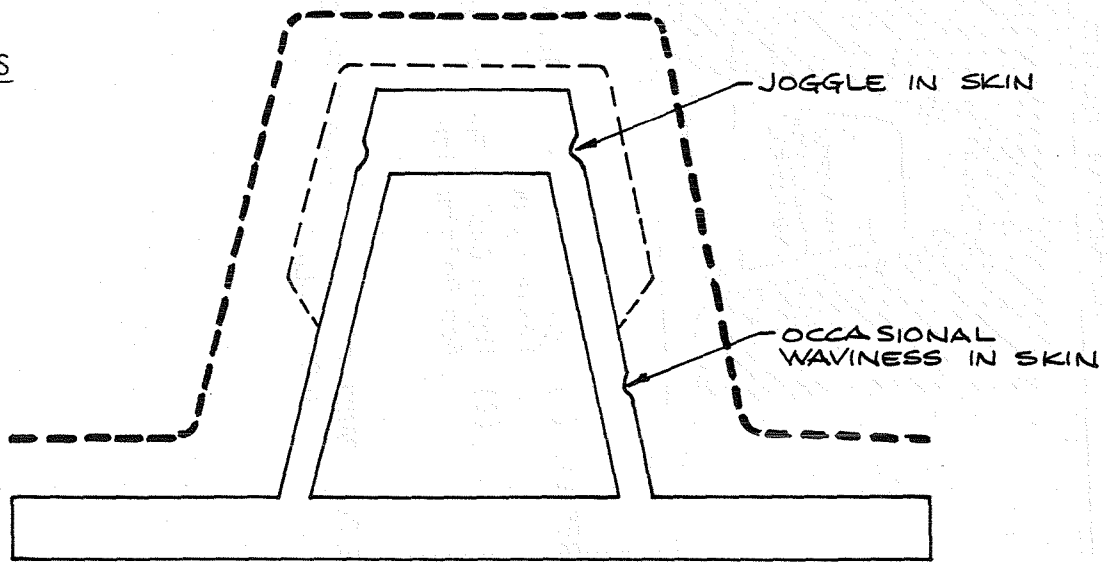

FIGURE 25. PANEL B HAT STIFFENED PANEL CURED WITH METAL TOOL CAP UNDER PRESSURE BAG

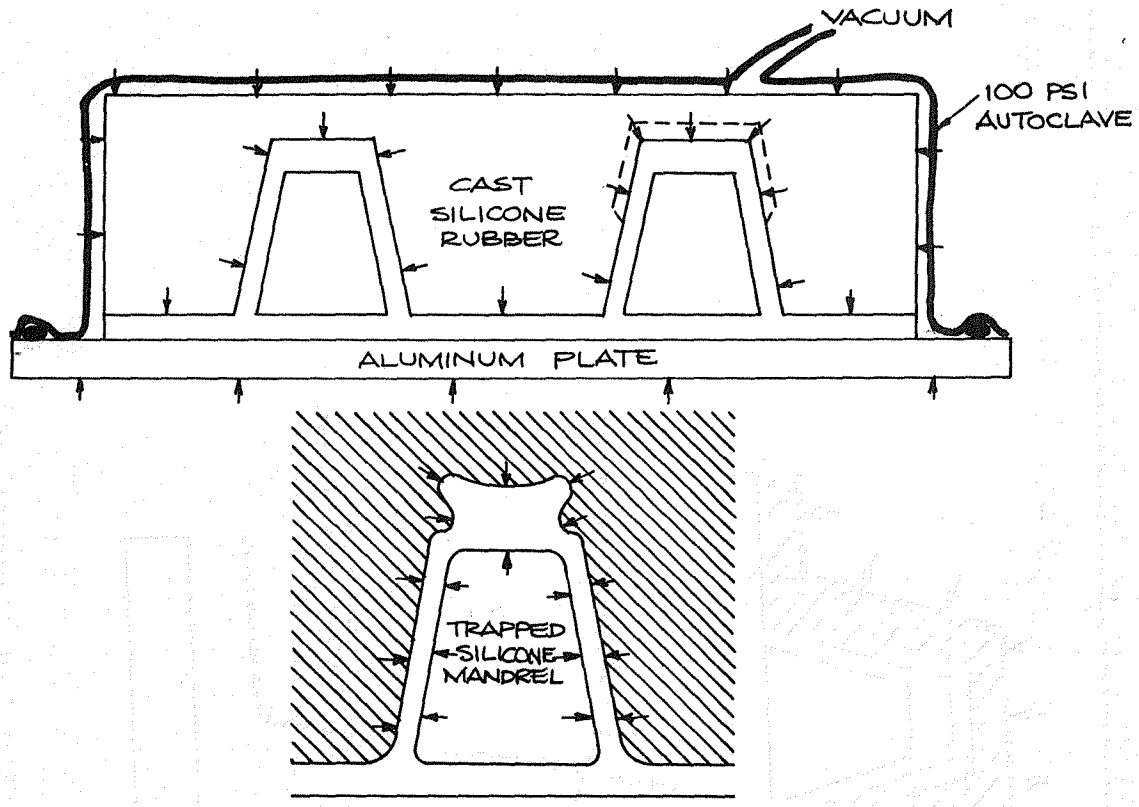

RESULTS (1) Soft Thick Cap Buildup Deformed Before Resin Cured

(2) Metal Cap in Tool Reduced But Not Eliminated Cap Deformation

FIGURE 26. PANEL C HAT STIFFENED PANEL CURED UNDER A SOLID SILICONE MOLD

1.2.10 Fabrication of Hat Panel With Aluminum Female Mold and Solid Rubber Mandrels, Panel D

The construction and fabrication of this panel was identical to that described in Section 1.2.9, except for the solid aluminum female hat side tool. (See Figure 27.) The objective of the solid aluminum female mold was to hold the location of the hat stiffeners and to eliminate the distortion in the cap of the hat caused by previous tooling/bagging processes. The female aluminum molds were machined from solid blocks of aluminum. A mock-up part was built in the hat recesses, .010 inch thicker than the designed web and cap area, using a combination of sheet aluminum and tooling sheet wax. Silastic "J" or Dapcocast 38-3 RTV silicone rubber was cast in the resultant cavity to make the hat mandrels. See Section 1.2.1.2, "Internal Mandrels." The rubber was cast undersize to first, allow the undensified layup on the mandrel to be inserted into the aluminum hat mold and; second, to allow rubber expansion when heated in the autoclave for part cure to create the necessary side compaction for high quality webs and caps.

Results

The quality of the panel web walls and upper cap reinforcement were in good void free condition. The quality of the outer skin in the hat reinforcement area was always high, but the skin areas between hats were frequently of high void content. (See Figure 27.) It has been determined that trapped silicone rubber was capable of creating up to 2000 psi when completely restrained in a metal box. When the parts were heated for cure and the silicone mandrels were oversize, the excess pressure created by expansion of the silicone rubber would actually lift the entire skin tool plate away from the aluminum hat tool. This was proven by an experimental panel that was cured with a thin skin tooling plate. The autoclave pressure forced the thin tool plate against the aluminum mold, and the silicone rubber forced a wave, or high area, in the skin at each hat. (See Figure 28.) The skin was of low void and high quality except for the waves.

It is technically possible, for a given assumed thickness/ply of composite, to calculate the exact volume of silicone rubber to cast to create 100 psi in all volume directions and to balance the 100 psi autoclave pressure. However, the practical tolerance of $\pm$ .0003 inch thickness/ply available in the prepreg material make this tooling fabrication concept impractical where multiple layers of material are in the cap.

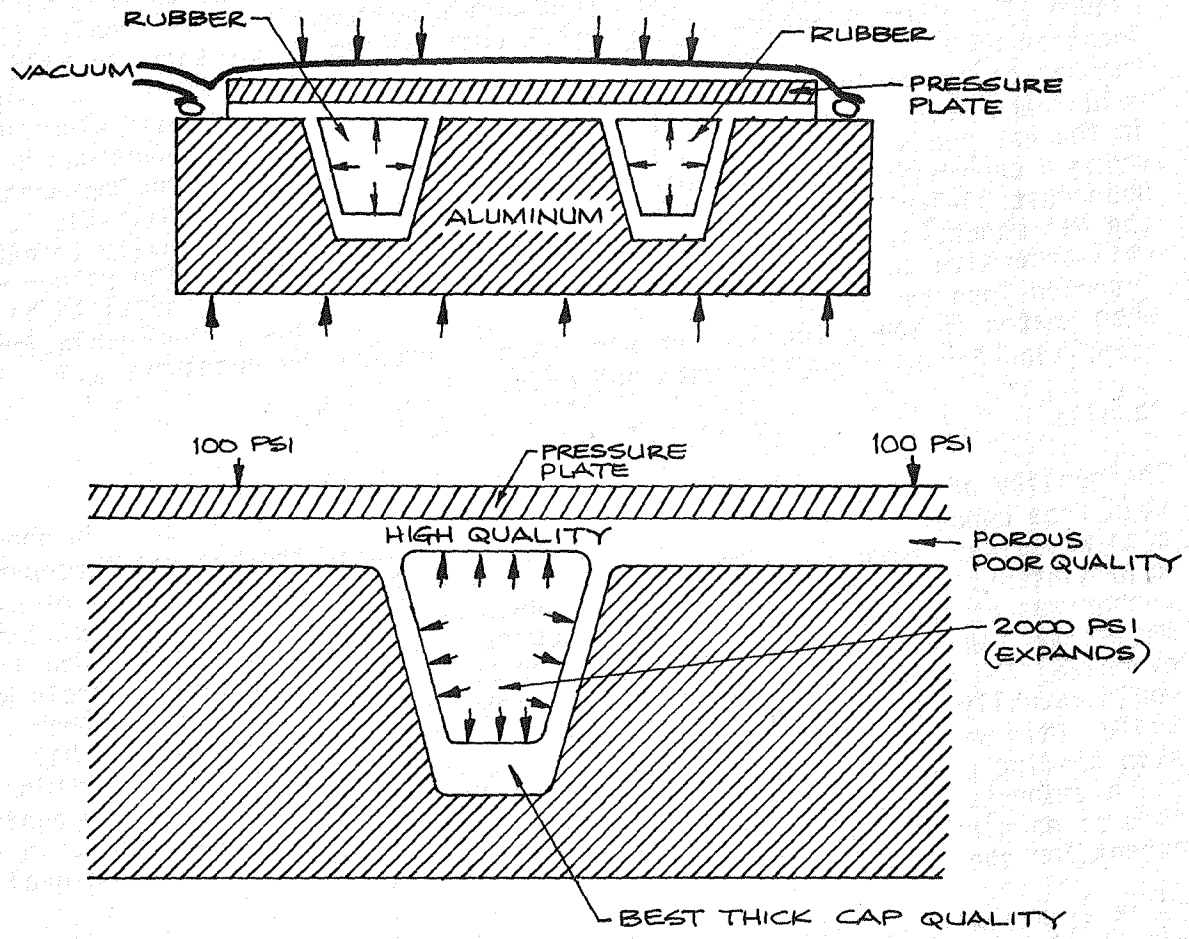

Rubber Expands More Than Metal and Lifts Upper Pressure Plate Between Hats

FIGURE 27. PANEL D HAT STIFFENED PANEL CURED IN AN ALUMINUM FEMALE TOOL WITH SOLID SILICONE MANDRELS

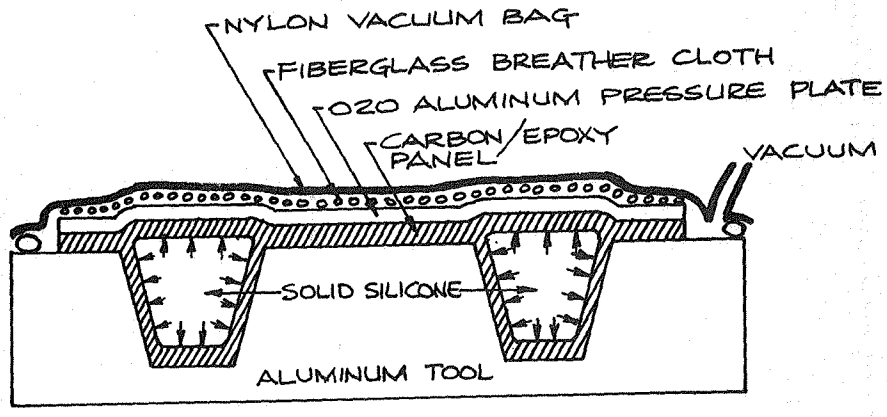

FIGURE 28. WAVES IN SKIN ABOVE THE SILICONE MANDRELS FROM EXCESS SILICONE RUBBER EXPANSION

1.2.11 Fabrication of Hat Panel With Aluminum Female Mold and Hollow Cast Rubber Mandrels, Panel E

The construction and fabrication methods used for this panel were identical to that described in Section 1.2.10, except for the silicone mandrels with a round hollow core. (See Figure 29.) The objective of the hollow mandrels was to reduce the excess upward pressure in the skin area of the solid mandrels described in Section 1.2.10, and to obtain a flat uniform overall quality skin. The hollow mandrels were cast in a similar manner to the solid mandrels of Section 1.2.10, except that an aluminum tube was supported in each hat cavity, and then the RTV silicone was poured to cast the mandrel. (See Figure 12.) The target was to have a 1/16 inch minimum cast wall thickness, opposite the center round cavity, in the web area of the mandrel. It was very difficult to secure these tube tooling aids accurately and retain this position during the rubber pouring step. In general, the minimum wall thickness varied from 1/32 to 3/32 inch. These hollow mandrels were rigid enough that the aluminum tubes could be removed from the mandrels and still allow the composite to be layed up without distortion (same as solid mandrels). The final bagging procedure for this type of panel used a nylon bag film sealed to the metal tool and hollow silicone rubber mandrels identical to the procedure shown in Figures 21 and 22. The application of autoclave pressure during the curing process caused the mandrels to expand and produce the desired molding pressure. (See Figure 29.)

Results

The quality of panels made by this process were variable from near perfect (free of voids and defects) to unacceptable for test. See Figures 30 and 31. The quality of the outer skin was always good but the hat cap area suffered. There were frequent voids and excess resin, in particular in the outer edges of the hat. The cause of this problem was credited to the somewhat soft nature of the silicone rubber mandrels. It was often difficult to force the mandrel to the bottom of the hat cavity. Then, when pressure of the autoclave was applied, the mandrel would lock in the wrong position and friction would keep the mandrel from moving to the bottom correct location. The nonuniform thickness of the rubber tooling walls also must have given uneven pressure to the part being fabricated. The hollow silicone rubber mandrels were difficult and expensive to fabricate, and a contoured mandrel could not have been made.

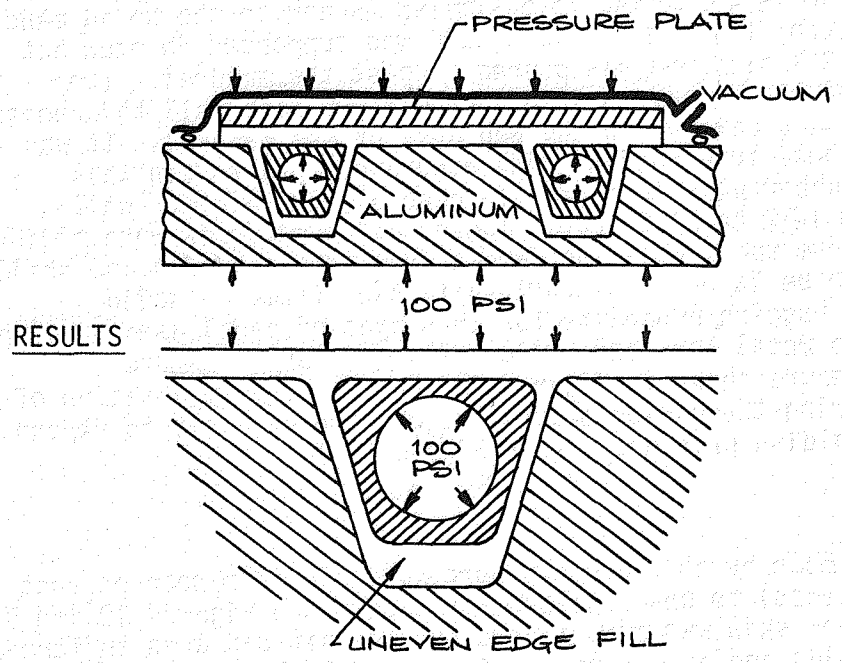

- CAST HOLE IN RUBBER REDUCES EXCESS UPWARD PRESSURE
- THIN SIDE WALL DOES NOT ALLOW RUBBER TO BOTTOM
- RUBBER LOCKS IN POSITION
- REDUCED PRESSURE IN CAP CORNERS
- RUBBER CASTING TIME CONSUMING AND DIFFICULT FOR CONTOUR SKINS

FIGURE 29. PANEL E HAT STIFFENED PANEL CURED IN AN ALUMINUM FEMALE MOLD AND HOLLOW RUBBER MANDRELS

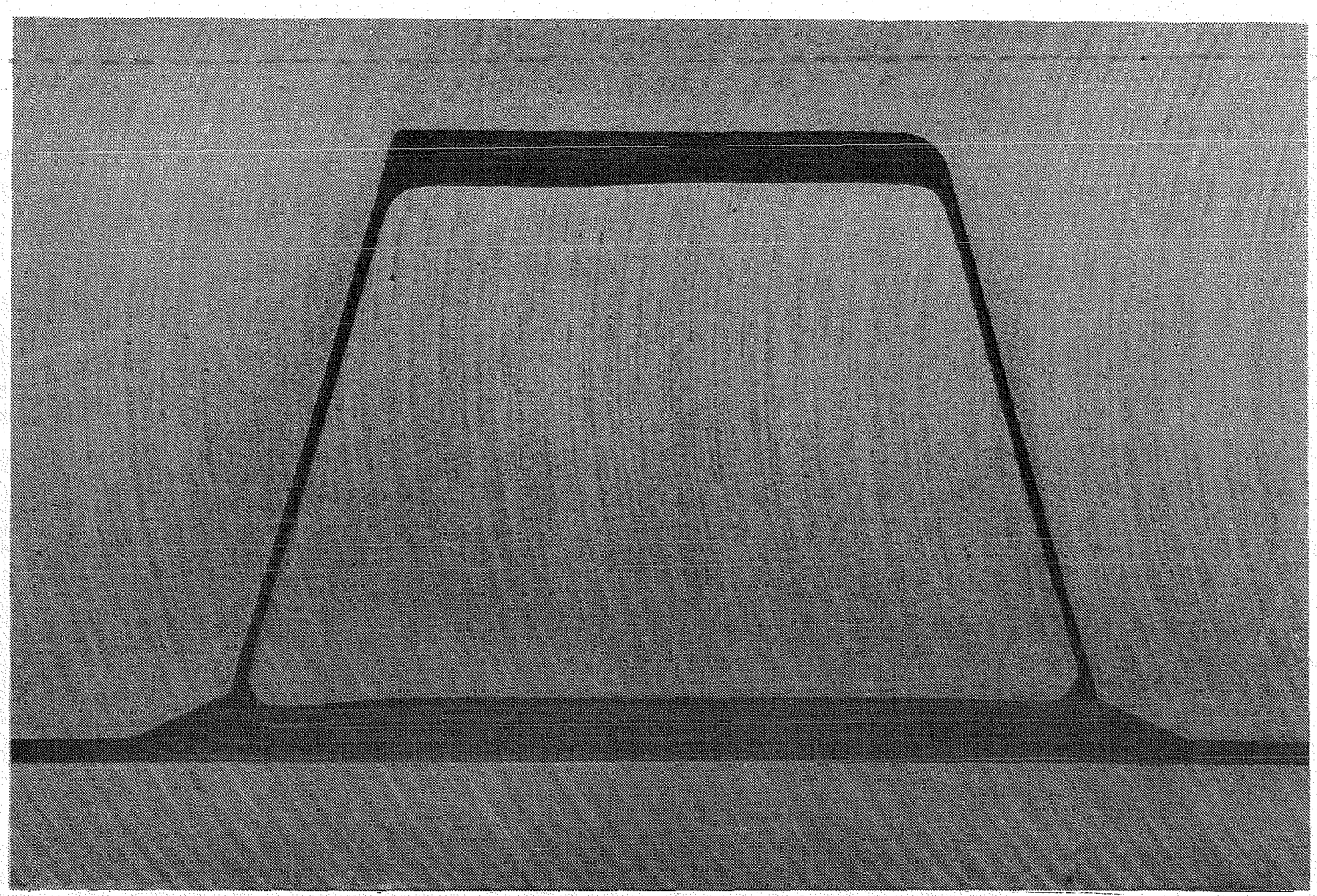

FIGURE 30. GOOD QUALITY THICK CAP HAT STIFFENER PANEL MADE WITH HOLLOW CAST MANDRELS

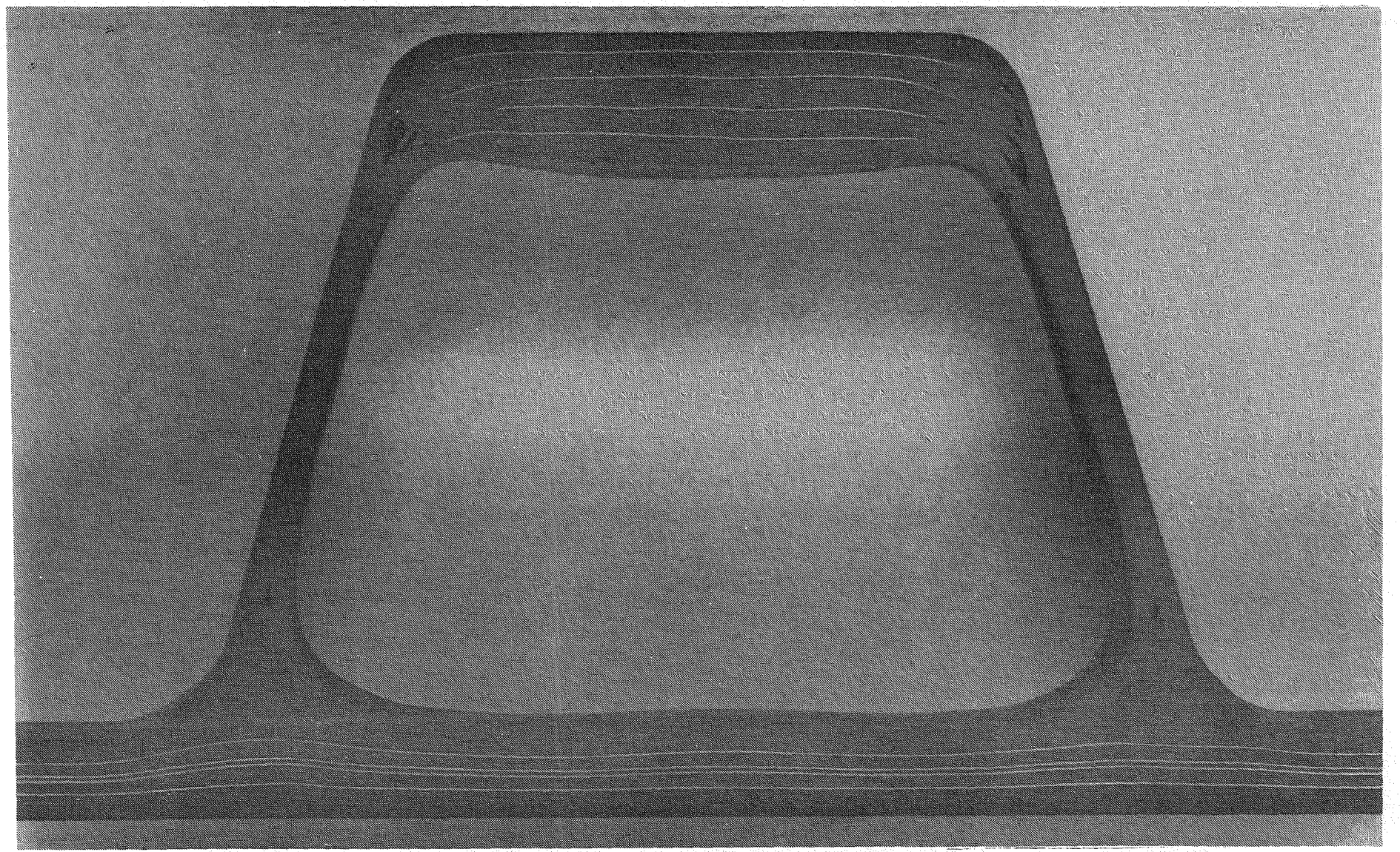

FIGURE 31. POOR QUALITY THICK CAP HAT STIFFENED PANEL MADE WITH HOLLOW CAST MANDRELS

1.2.12 Fabrication of Hat Panel With Aluminum Female Mold and Uniform Wall Thickness Hollow Rubber Mandrels, Panel F

The construction and fabrication of these panels were identical to that described in Section 1.2.11, except that the silicone mandrels were extruded, with uniform wall thickness, to the desired shape. The extrusions were made by the "D" Aircraft Products Co. using Dapco Cast SMC250 silicone rubber. (See Figure 32.) The external size of the mandrel matched the internal size of the finished hat. The target mandrel wall thickness was 0.08 inch. Wooden internal tooling aids were required to support the extruded mandrels during the wrap around lay up procedure (same as Section 1.2.6). The final bagging procedure for this type of panel used a nylon bag film sealed to the metal tool and hollow silicone rubber mandrels as shown in Figures 21 and 22. The application of autoclave pressure during the curing process caused the mandrels to expand, uniformly, to produce the desired molding pressure. (See Figure 32).

Results

The uniform high quality of panels made by this process made it a good manufacturing procedure to fabricate thick cap heavy load carrying hat stiffened panels. The only concern was the high cost of the female aluminum tool. The extruded-to-shape mandrels performed as desired, were not expensive, could be extruded to close enough tolerance and shape (for later inflation) and had no length limitation. Parts with mild contour could be easily fabricated.

1.2.13 Best Method to Fabricate Quality Heavily-Loaded Hat Stiffened Panels With Upper and Lower Cap Reinforcement

Engineering drawings were prepared for each load condition hat stiffened panel to describe the precise detail for fiber stacking and the direction and location of each layer of graphite material. Figures 33, 34 and 35 are typical examples of portions of these drawings. A step-by-step description of the most satisfactory manufacturing operations, with available photographs, follows for the heavily-loaded hat stiffened panel design shown in Figure 36.

This panel construction required the layup and densification of two ply ± 45° and three-ply, 12-ply and 13-ply 0° sheet material to make the prescribed patterns. These densified sheets (200°F for 10 minutes under vacuum bag pressure and then cooled under pressure when using Narmco 5208/T-300 tape) were trimmed to the currect sizes prior to location on the tool. See Figure 37 for the following steps of lay-up detail.

1. One ± 45° section was laid on the tool from the edge of the panel, down the first hat web, across the cap and about 1/4 inch up the opposite web. (See Figure 38 for start of layup, prior to trim of sheet to size.) Note use of tooling aid to force material tight in concave area of tool.

2. A 13-ply 0° section was laid in cap area.

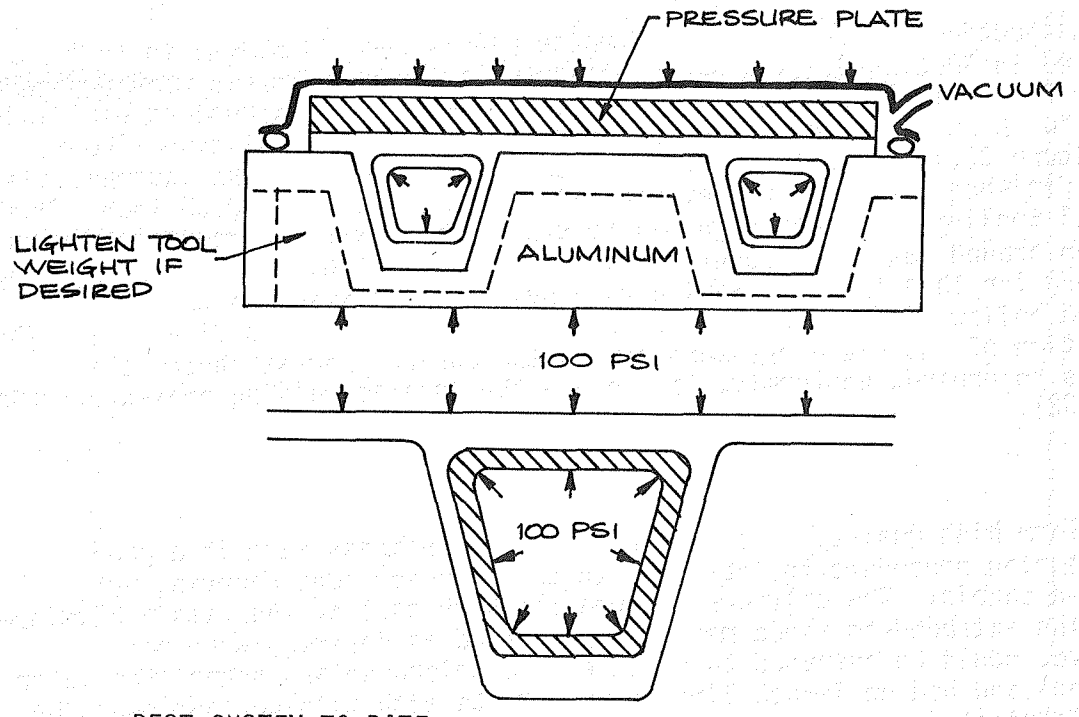

BEST SYSTEM TO DATE

- No Limit On Rubber Length
- No Problem With Mild Contour
- Does Require Machined Female Aluminum Tool

FIGURE 32. PANEL F HAT STIFFENED PANEL CURED IN AN ALUMINUM FEMALE TOOL AND EXTRUDED HOLLOW RUBBER MANDRELS

MATERIAL:

THORNEL 300/5208

t_{PLY} = 0.0052 (TAPE)

N_X = 14,800 LB/IN.	ϵ_X = 0.004 LB/IN^2
N_X/L = 493 LB/IN^2	$E\hat{T}$ = 3.7 x 10^6 LB/IN
W/AL = 0.000689 LB/IN^3	GT = 0.87 x 10^6 LB/IN

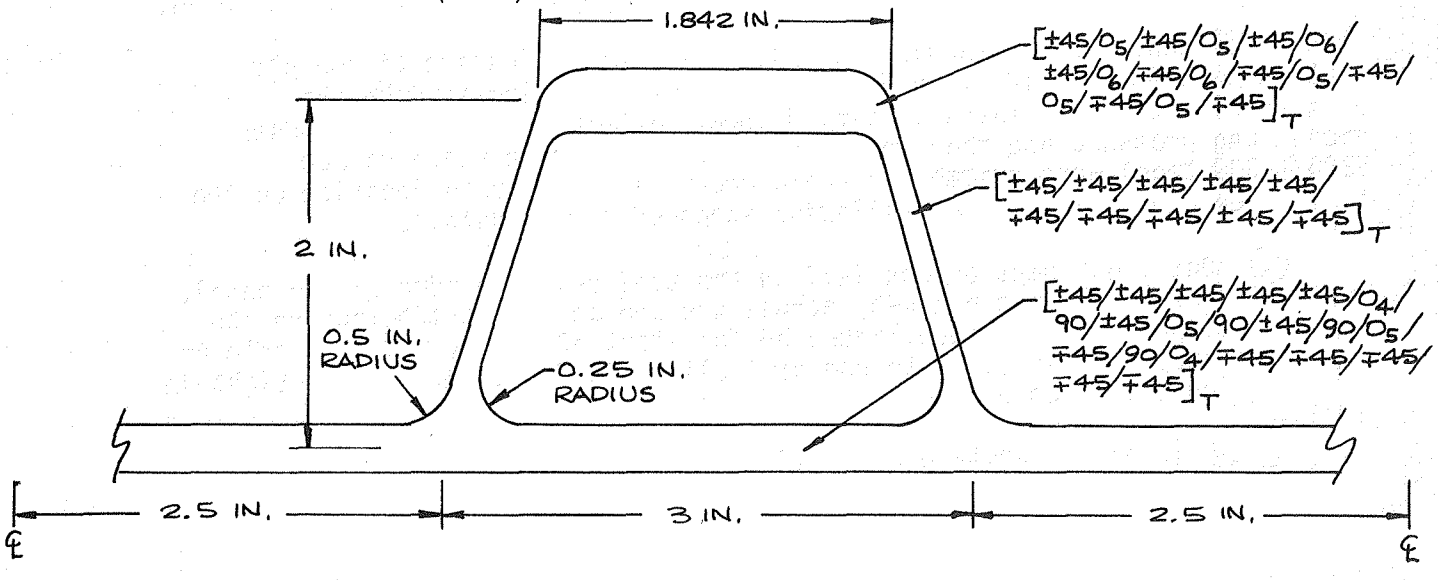

FIGURE 33. TYPICAL MEDIUM LOADED HAT STIFFENED DRAWING DETAIL

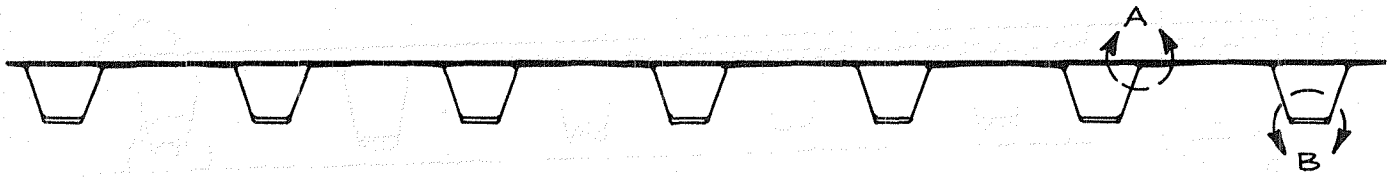

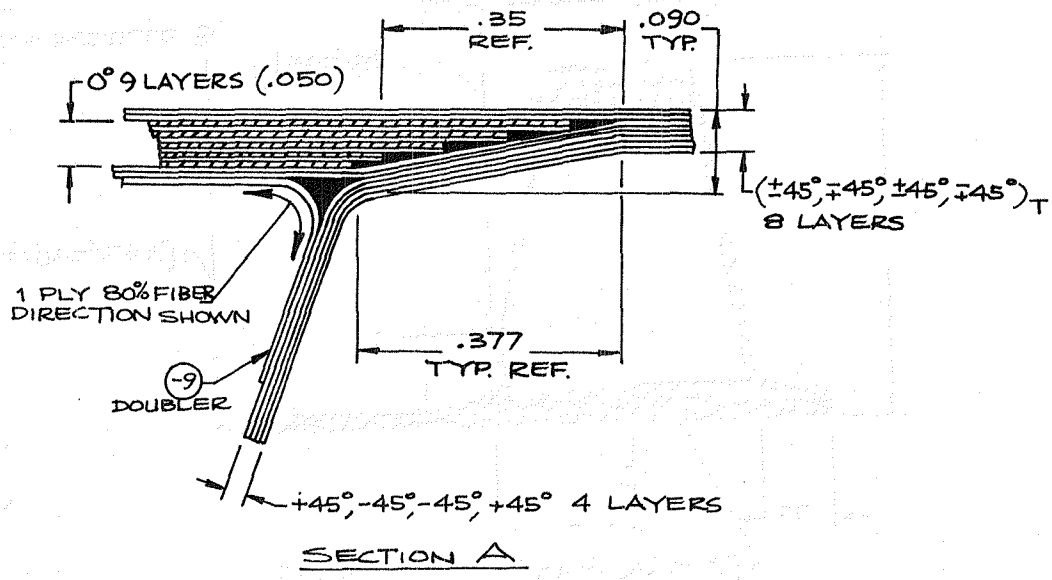

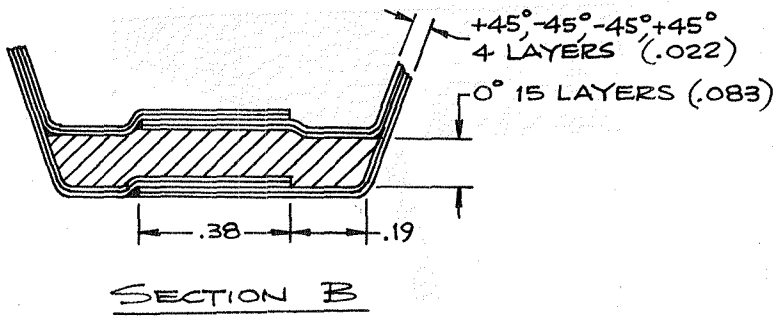

FIGURE 34. TYPICAL HEAVILY LOADED HAT STIFFENED DRAWING DETAIL

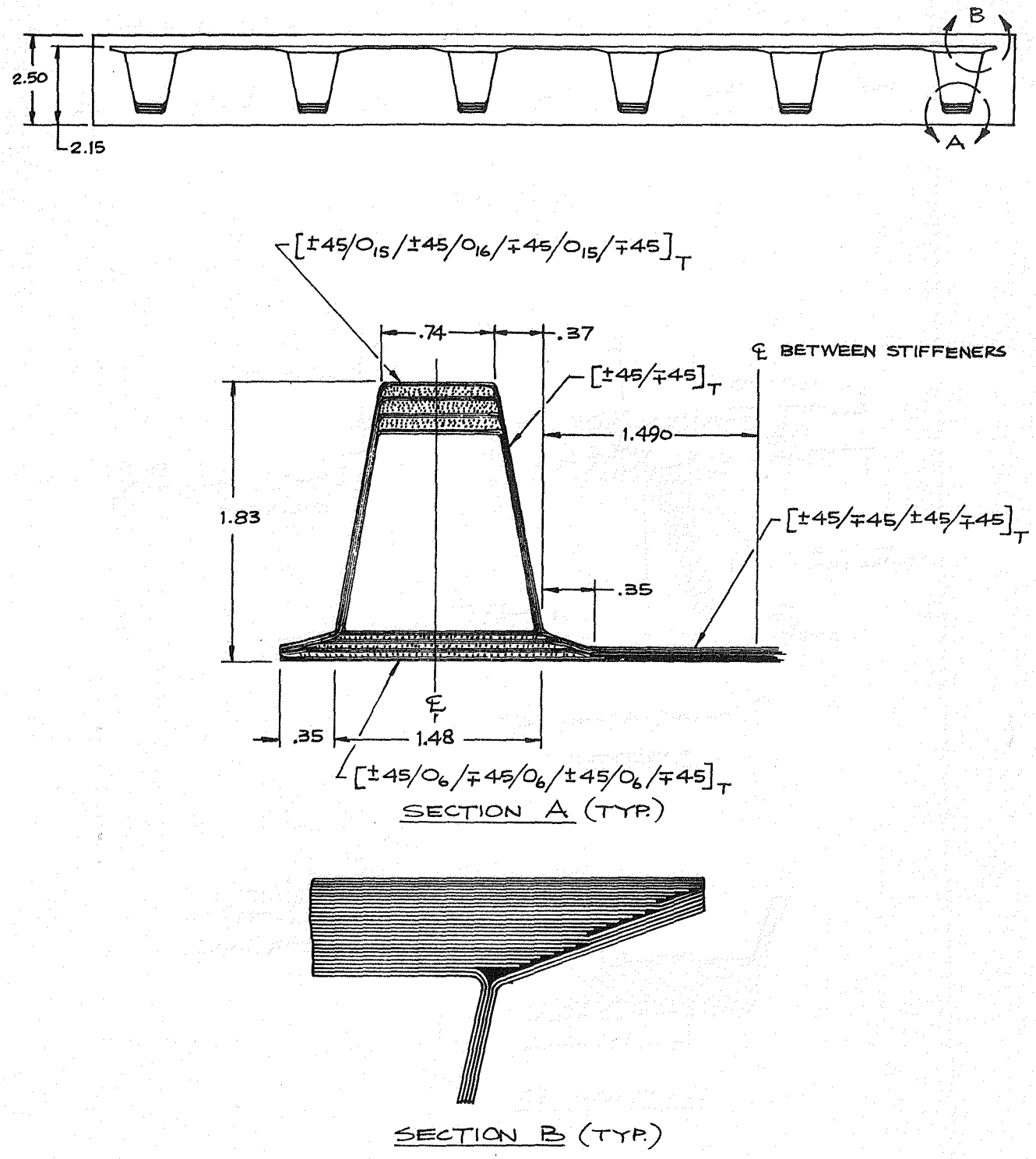

FIGURE 35. ALTERNATE HEAVILY LOADED HAT STIFFENED DRAWING DETAIL

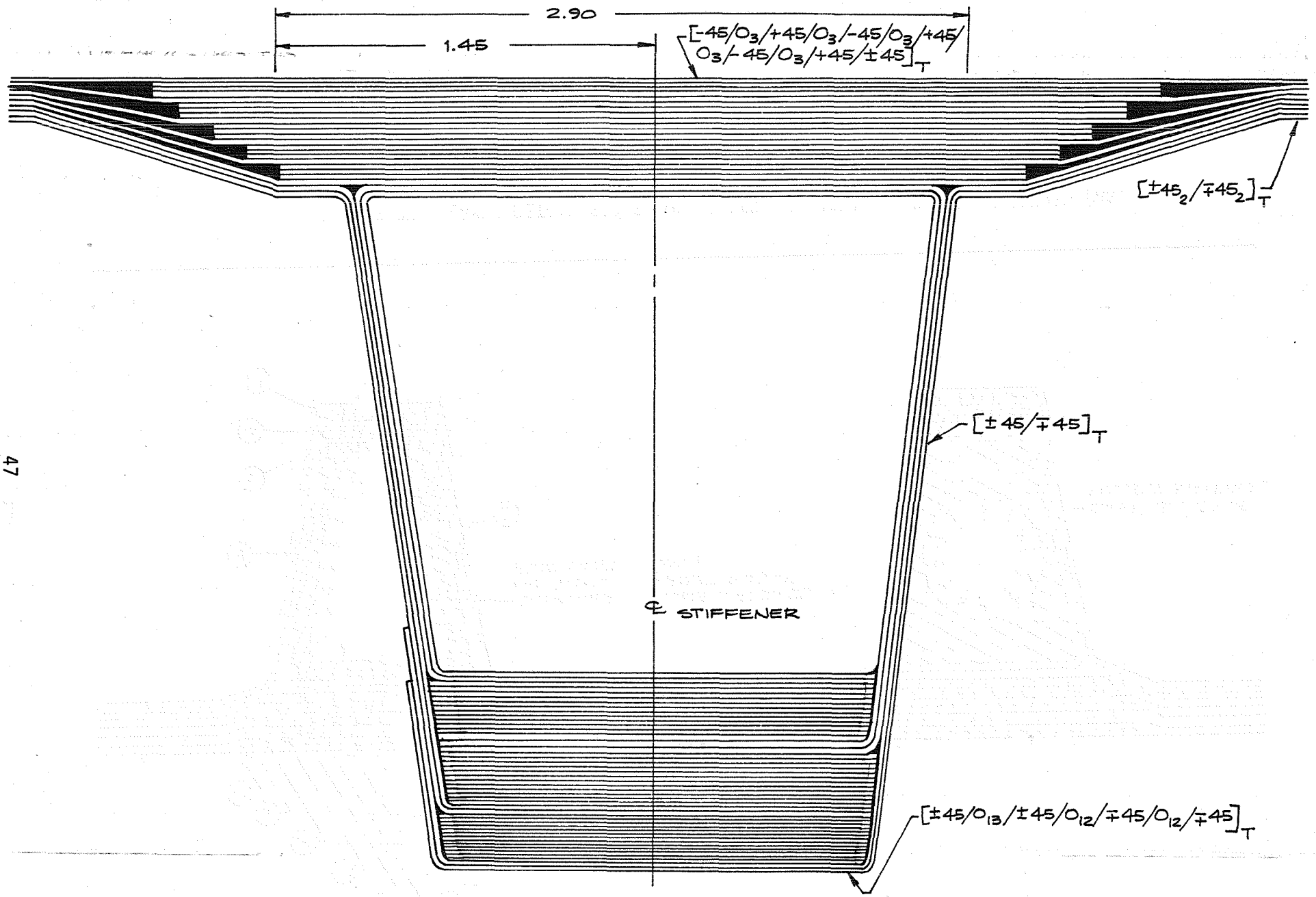

FIGURE 36. SECOND ALTERNATE HEAVILY LOADED HAT STIFFENED PANEL DRAWING DETAIL

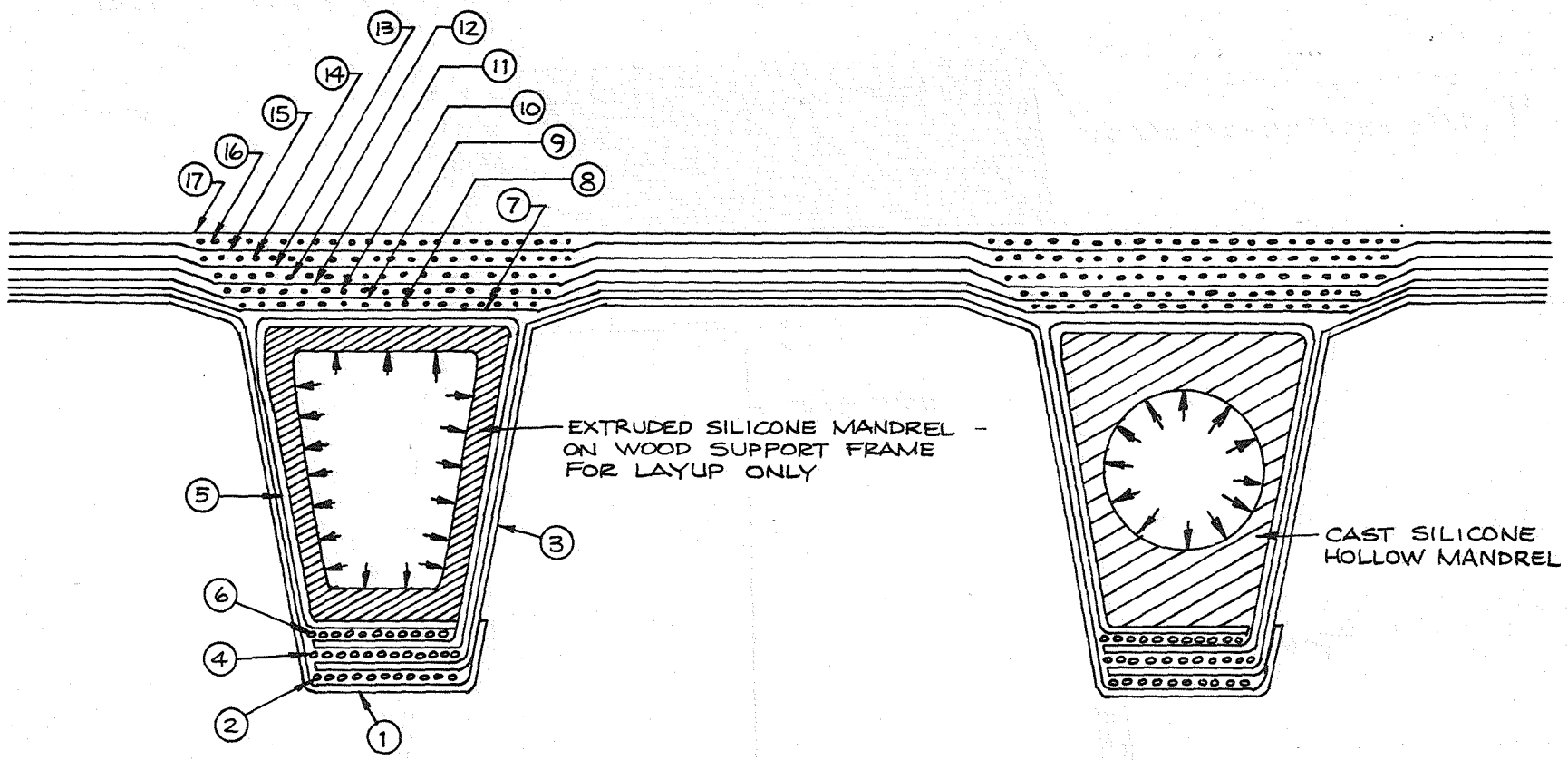

FIGURE 37. LAYUP DETAIL FOR SECOND ALTERNATE HEAVILY LOADED STIFFENED PANEL

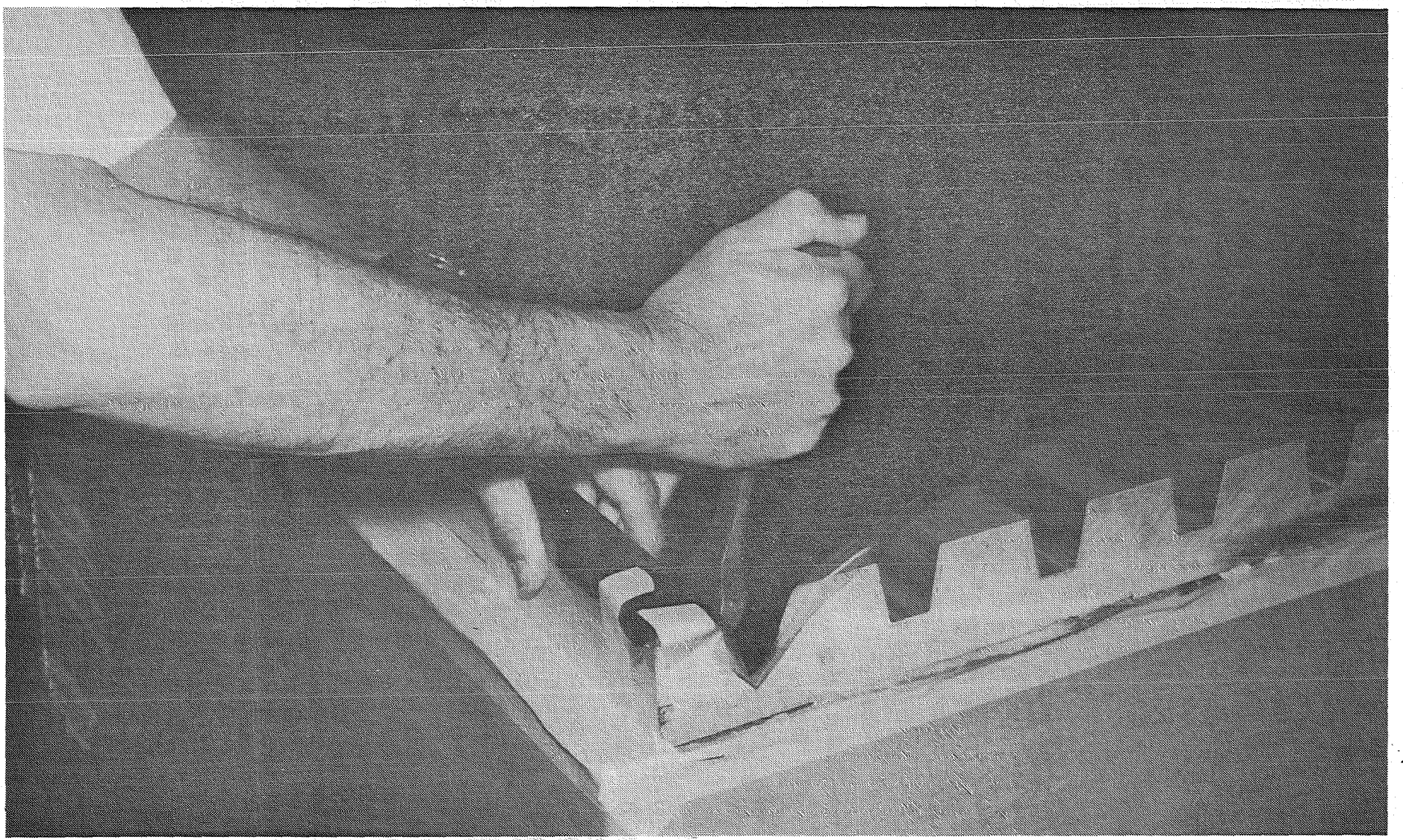

FIGURE 38. START OF HAT LAYUP AT ONE EDGE OF TOOL

③ One ± 45° section was laid across the full cap width over the 2 layer, up the opposite hat web side from 1 , across the skin area, down the next hat web, across the cap and 1/4 inch up the opposite web.

④ A 12-ply 0° section was laid in the cap area.

⑤ & ⑥ One ± 45° section was wrapped around the constant thickness extruded mandrel, mounted on a wooden mandrel for support. A 12-ply 0° reinforcement section was placed across the hat cap and the remainder of the ⑤ ply wrapped over the ⑥ reinforcement. This detail was then placed in the cavity of the tool over the ①, ③, and ④ plies.

This procedure was completed from left to right across the tool for each hat stiffener.

⑦ One layer of ± 45° tape was placed across the total skin.

⑧ Three-ply 0° sections were layed in each hat base.

⑨ One layer of -45° tape was placed across the total skin.

⑩ Three-ply 0° sections were layed in each hat base.

⑪ One layer of +45° tape was placed across the total skin.

⑫ Three-ply 0° sections were laid in each hat base.

⑬ One layer of -45° tape was placed across the total skin.

⑭ Three-ply 0° sections were laid in each hat base.

⑮ One layer of +45° tape was placed across the total skin.

⑯ Three-ply 0° sections were laid in each hat base.

⑰ One layer of -45° tape was placed across the total skin.

One layer of Armalon parting material was placed over the entire skin area. The upper 1/4 inch thick aluminum skin tool plate was placed over the Armalon. The edges of the upper tool plate were sealed with masking tape on all four sides to the lower tool to trap resin in the panel and minimize resin bleed during the pressure curing cycle. A layer of fiberglass breather cloth was placed over the upper tool plate and down over the upper part of the lower tool. This was to protect the vacuum bag from any sharp edges. Figure 39 shows a typical part made with the hollow cast silicone mandrels ready for the vacuum bag. Note the breather cloth over the mold surface and the cast hollow inflatable mandrels. A layer of Dapco seal #2000 and a layer of Schnee Morehead #9241 bag sealant are visible at the end of each mandrel. The wooden mandrels were removed from inside the silicone inflatable mandrels. Short lengths of rigid tubing were inserted in each end of the silicone inflatable to support the inflatables during the bagging operation. These ends remained open to the autoclave to obtain the desired mandrel expansion when the autoclave was under pressure. The tubes extending from the ends of the inflatable mandrels to support the inflatables during the bagging operation are clearly visible in Figure 39.

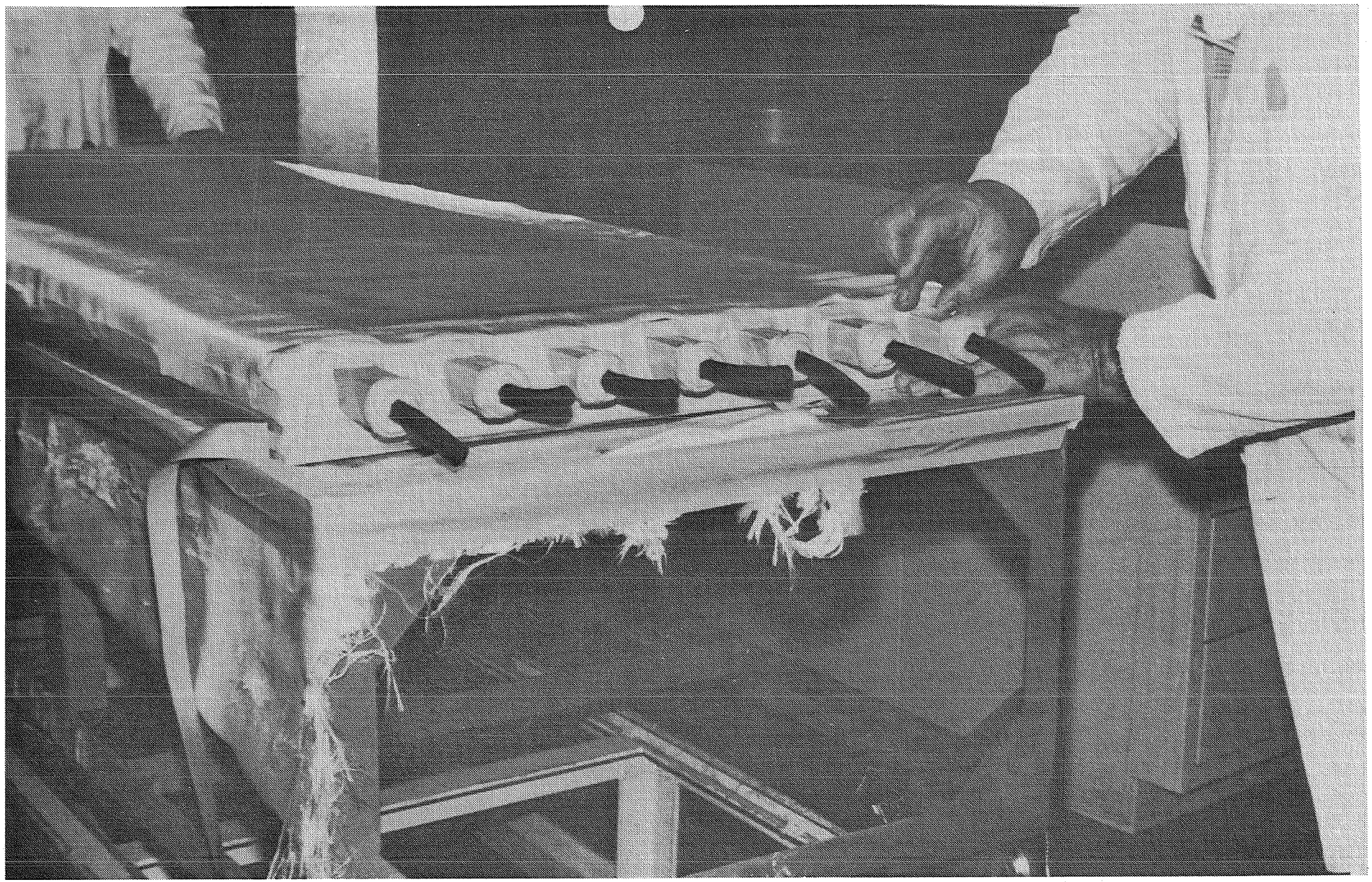

FIGURE 39. LAYUP WITH INFLATABLE MANDRELS READY FOR VACUUM BAG

A nylon vacuum bag was placed over the tool as shown in Figures 21 and 22. A figure of the vacuum bag, sealed in place with the vacuum outlet in place, is shown in Figure 40. The panel was cured by the standard autoclave 100 psi 350°F pressure and temperature curing cycle.

Most of the panels were cut to a specified size and potted to a one-inch depth on each end with a room-temperature curing epoxy casting material. The ends were then machined flat and parallel. Figures 41 and 42 show the end views of the panel described in this section.

Figure 43 shows the detail of the potted ends of a different two hat stiffened panel ready for a compression test.

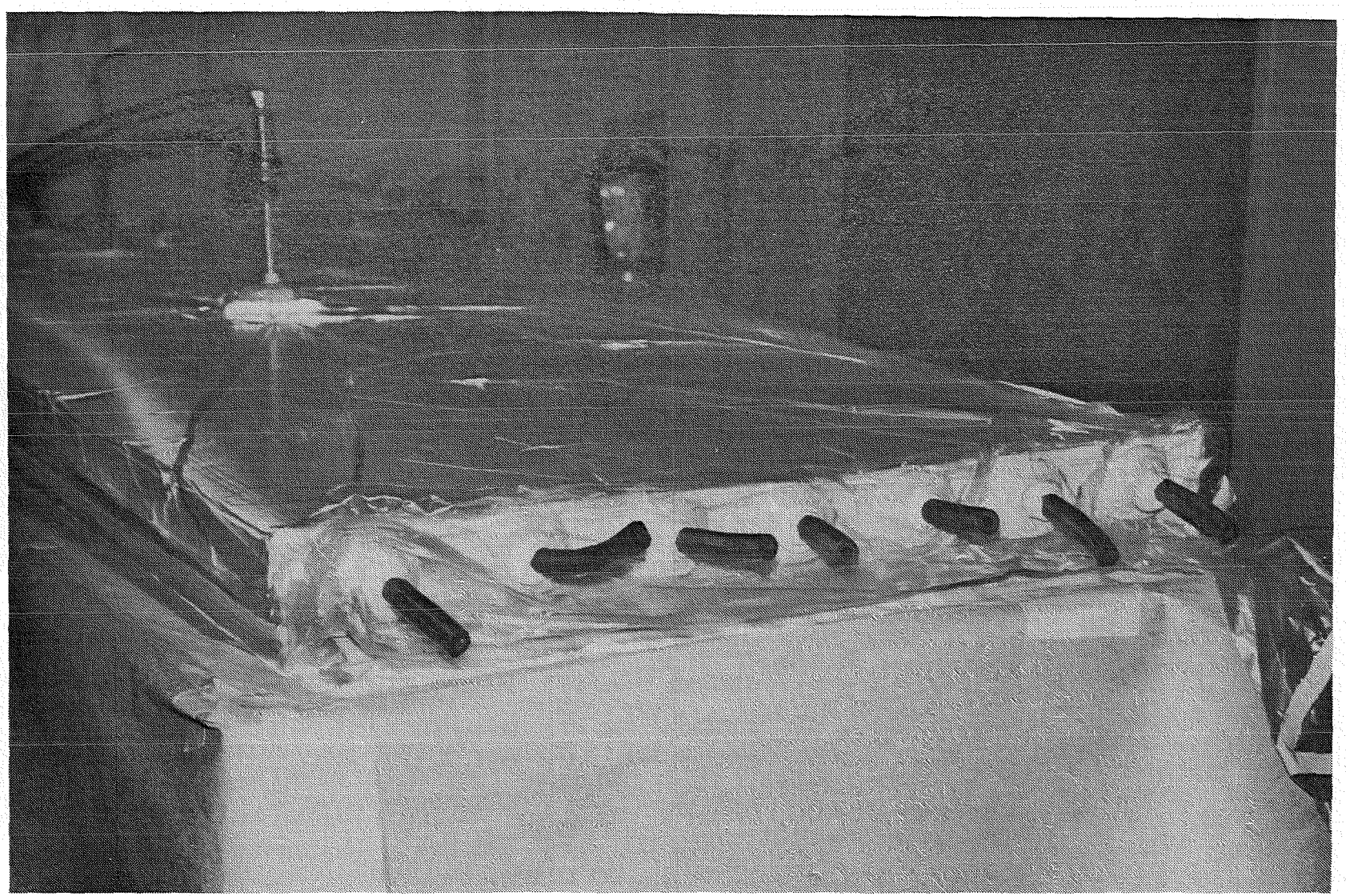

FIGURE 40. INFLATABLE MANDRELS WITH VACUUM BAG IN PLACE

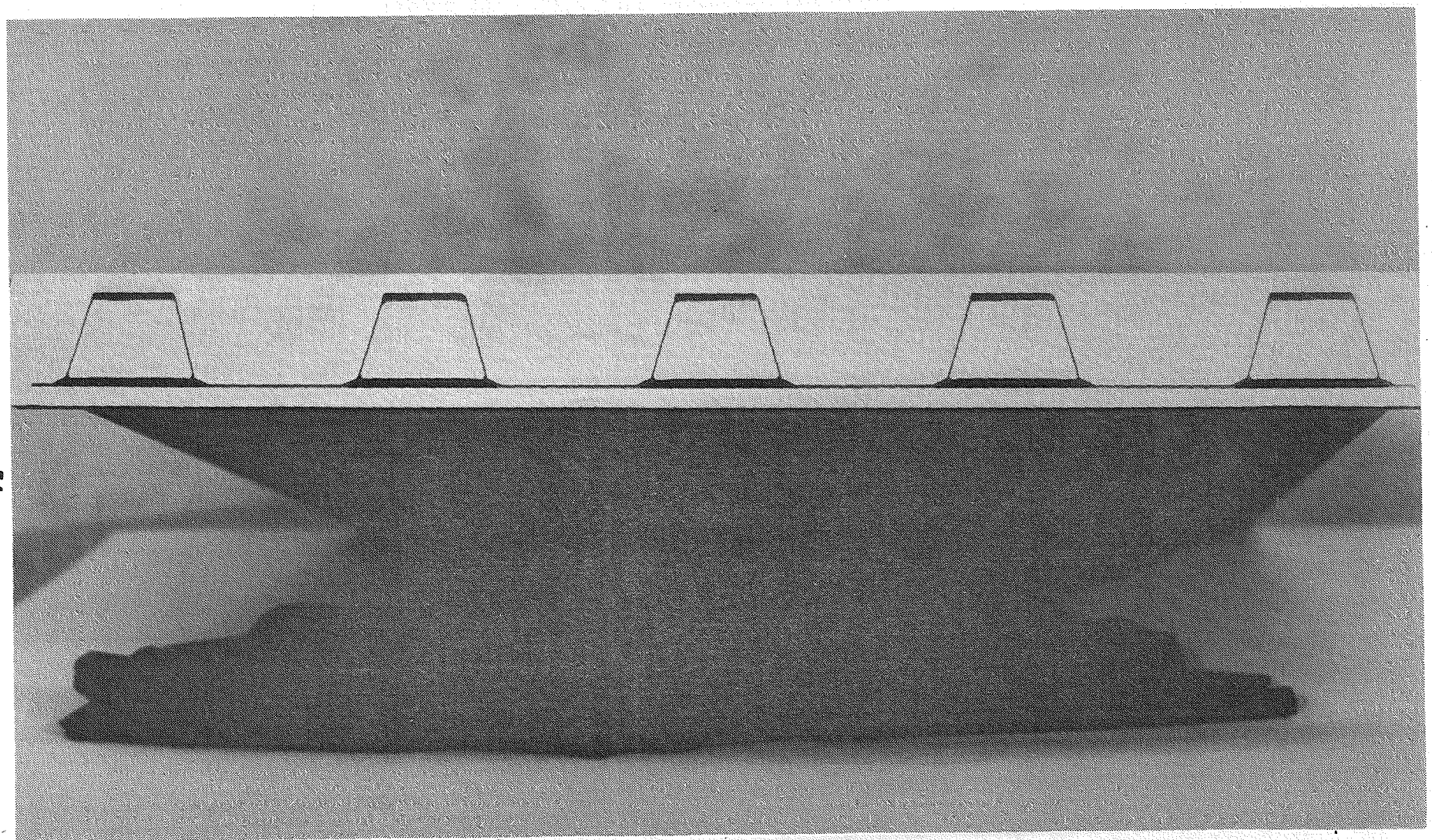

FIGURE 41. POTTED END OF A 5 HAT HEAVY LOAD SPECIMEN

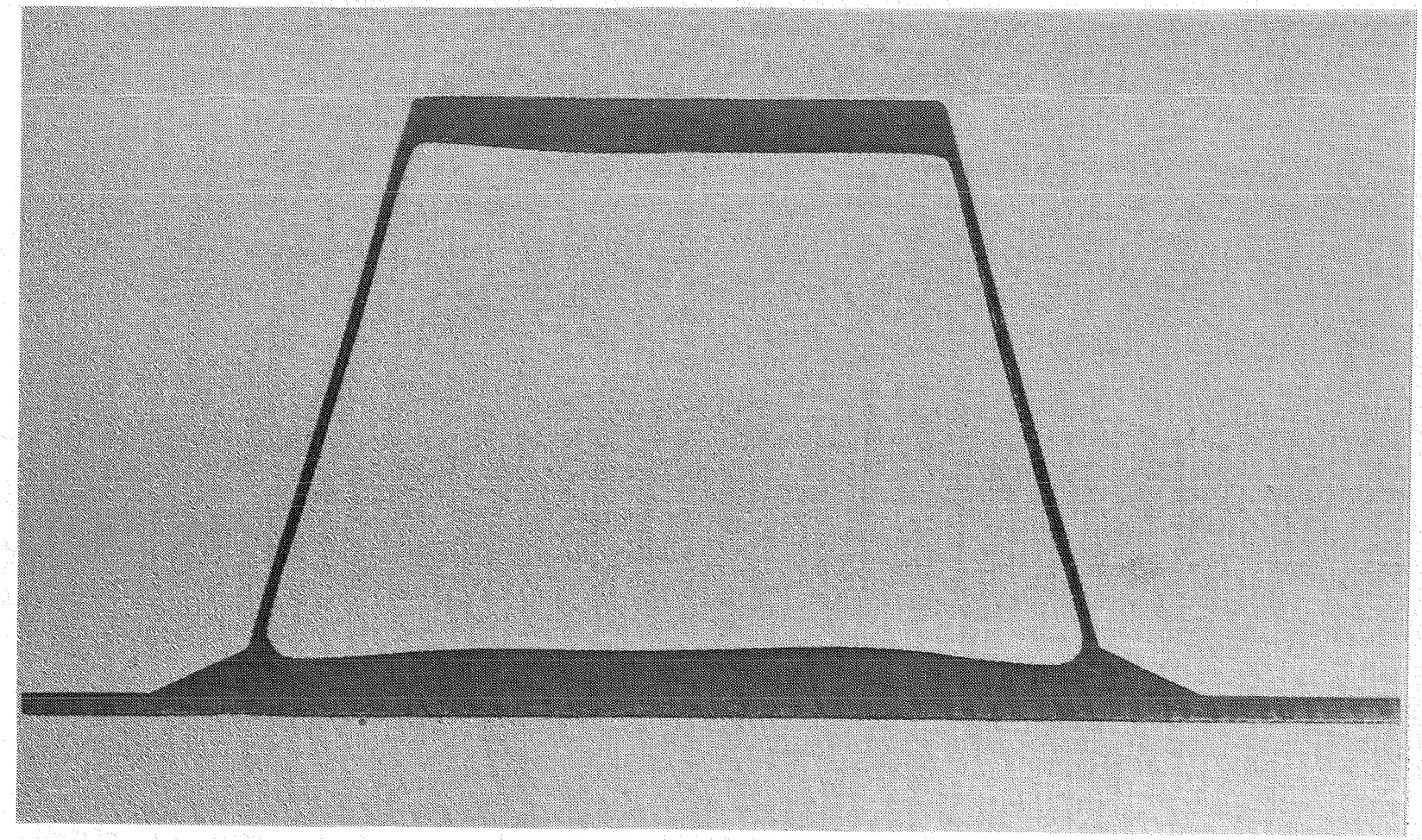

FIGURE 42. CLOSEUP OF END OF ONE HAT

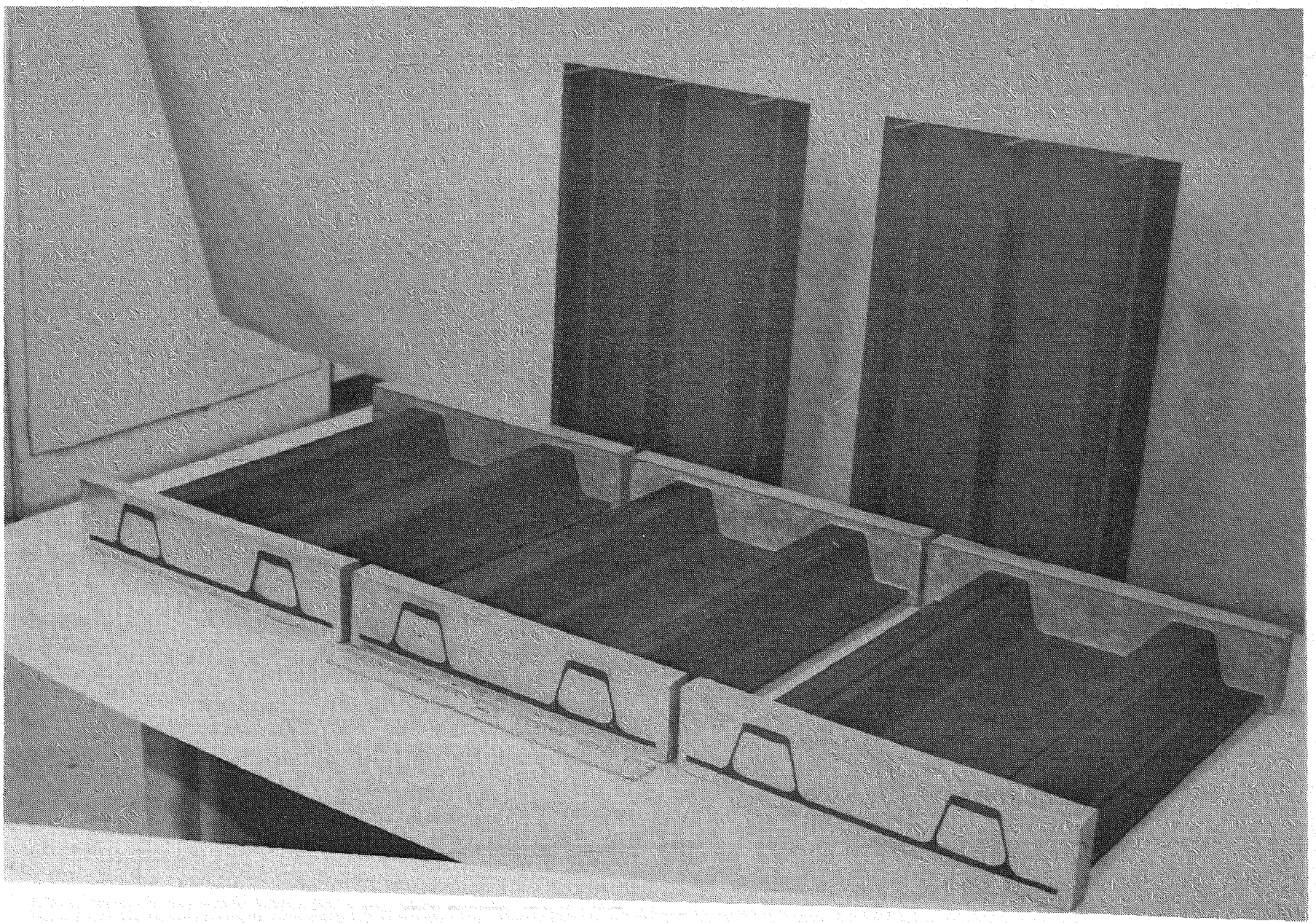

FIGURE 43. POTTED 2 HAT STIFFENED PANELS READY FOR COMPRESSION TEST (BLADE STIFFENED PANELS IN BACKGROUND)

TASK 2 J STIFFENERS

"J" stiffened panels were designed for low and medium load carrying conditions. This section presents the methods of tooling and methods of layup and assembly for integral molded "J" stiffened panels. The section also identifies the problems of manufacture, including panels of poor quality, and suggests the most successful method of fabrication.

2.1 "J" Stiffened Design Concepts

Three basic configurations of "J" stiffened panels were fabricated during the course of this program. Variations of these concepts included number of plies, orientation of plies, location of overlaps of individual plies, and spacing and depth of the "J" web and caps. Figure 44 shows the typical detail of the three design concepts.

2.1.1 Lightly-Loaded Panel With Inner Plies Continuous From Cap to Cap

The lightly-loaded "J" stiffened panels featured a design with a continuous ply of ±45° fiber orientation material from cap to cap. (See Figure 44A.) The outer skin (5) was continuous the width of the panel and was a mixture of 0°, ±45°, 90° fiber pattern. The inner skin and web sections (1) and (2) were mainly ±45° fiber pattern and were continuous from the top side of one "J" cap, down the web, across the inner skin, up the adjacent web and across the under side of the second "J" cap. 0° reinforcement (3) was applied for each "J" cap. Additional 0° reinforcement was added at the radius to fill the potential gap at the intersection of the web to the outer skin (6).

2.1.2 Medium-Loaded Panel - Continuous Inner Material for "J" Stiffener

The medium-loaded "J" stiffened panels featured a design with the same continuous ply of ±45° fiber orientation as that described in Section 2.1.1 and as shown in Figure 44B. However, in this case, the upper cap reinforcement (3) was thicker, and a heavy flange (4) was designed into the skin at the base of each hat web.

A. Light Load "J"

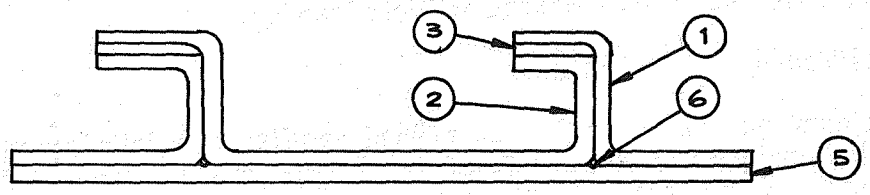

B. Medium Loaded "J"
Reinforced Cap and Base

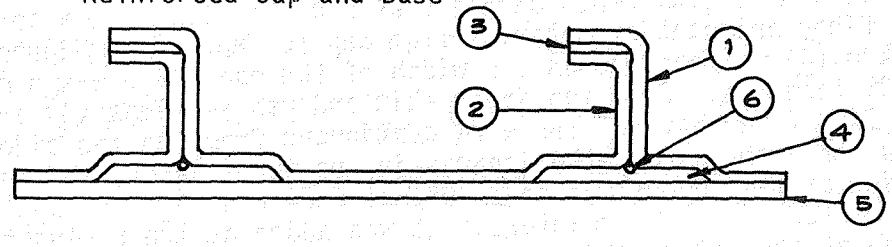

C. Separate "J"

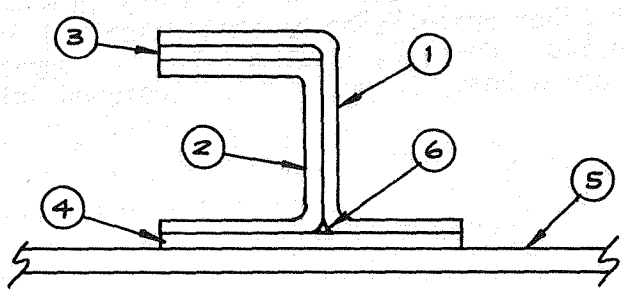

(1) MAINLY ±45°
(2) MAINLY ±45°
(3) ALL 0°
(4) ALL 0°
(5) OUTER SKIN 0°, ±45°, 90°
(6) ALL 0° ROLL

FIGURE 44. "J" STIFFENED PANEL DESIGN CONCEPTS

2.1.3 Medium-Loaded - Individual "J" Stiffener

The medium-loaded individual stiffener design differs from the other "J" stiffener concepts in that there was no continuous material between "J" stiffeners other than the outer skin as shown in Figure 44C. Additional reinforcement was added to the cap (3), and base (4) of each stiffener as necessary for the prescribed load.

2.2 Tooling and Tool Fabrication

This section describes the tooling development and methods of making the tools for the "J" stiffened panels. In addition, problems associated with the use of the tools and the quality of panels made on the tools are discussed.

Information obtained from prior fabrication of tooling for hat stiffened panels assisted in the tooling design concepts for the "J" panels. All tooling for these panels was based on the concept of a flat, heavy tool base plate and a set of expandable internal mandrels held in place by a strong supporting frame around the periphery, as shown in Figure 45.

Some portion of the mandrels were always made of cast silicone rubber and, as the rubber expanded during the heat of the curing cycle, the holding frame supported the mandrels and forced the expansion pressure to compact the webs of the panels.

2.2.1 All-Rubber Mandrels

The first tool design for the "J" panels used all-cast-silicone-rubber mandrels, as shown in Figure 46. A dummy part 1 was made of a combination of aluminum and tooling wax that was between .010 inch and .020 inch thicker than the desired final composite panel. The extra thickness was required to make the rubber mandrels undersize in order to allow the uncured layup to fit in place in the tool. The dummy part was located on an aluminum tool plate (3), and an aluminum frame (2) with welded corners was located on the tool plate. Location and support pins (5) were installed after failure of the first part to hold the frame in the correct position on the tool during the processing cycle. Steel support pins, 1/4-inch diameter, were on approximate four inch spacing around the complete frame. Silicone rubber, Dow Corning Silastic "J" or "D" Aircraft Company's Dapco Cast #38-3, were mixed, degassed, and poured to the top level of the aluminum holding frame (2). The degassing step, prior to pouring the silicone rubber, was mandatory in order to obtain a casting free of voids.

Results of Part Fabrication

The tool was easy to fabricate, but the panels fabricated were of unacceptable quality. The great mass of the silicone rubber created very high side pressure and caused the angle supports and the "J" stiffeners to bow from a straight line. In addition, the thick caps of the "J" stiffeners for heavily-loaded panels were unsatisfactory. The resin flow and fiber distortion in the cap caused an unequal thickness in this area that could not be controlled. (See Figure 47.)

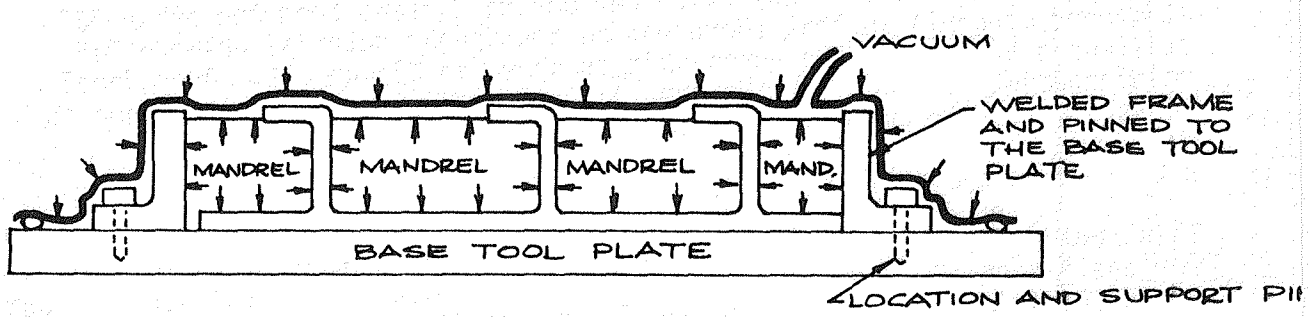

FIGURE 45. BASIC "J" STIFFENED TOOL CONCEPT

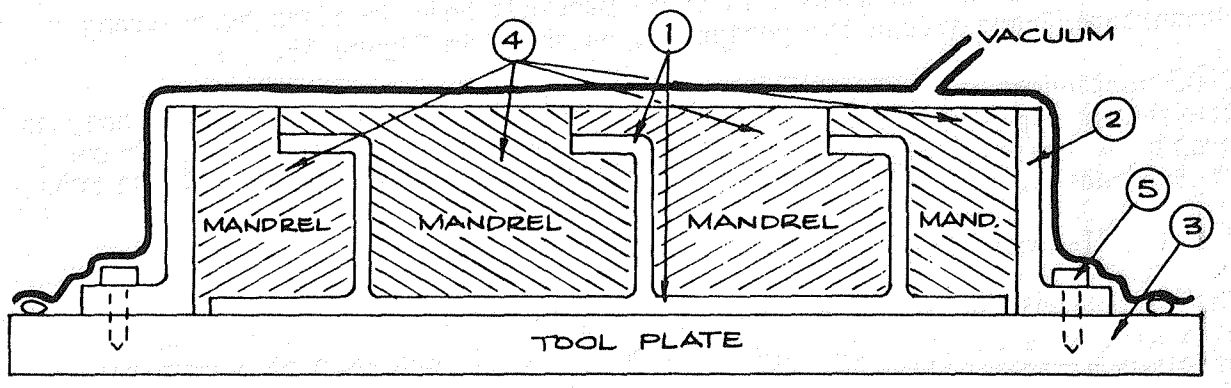

FIGURE 46. ALL SILICONE RUBBER MANDRELS

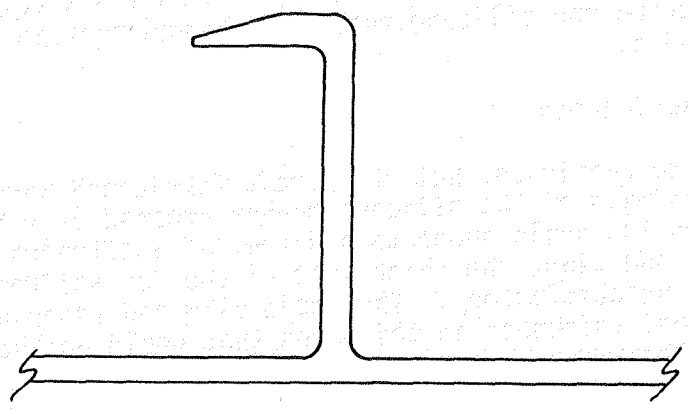

FIGURE 47. NON-UNIFORM THICKNESS CAP

2.2.2 Rubber Mandrels With Metal Inserts

The second tool design for lightly-loaded "J" panel construction, was similar to that described in Section 2.2.1, except an aluminum block insert was cast into each rubber mandrel. The block was sized to control the silicone rubber thickness to approximately 1/2 inch, except under the "J" cap. The object was to obtain a controllable uniform pressure over the complete panel. (See Figure 48.) In addition, location and support pins were located on approximate four inch center between the base tool plate and the welded holding frame.

Results of Panel Fabrication

The problem of high side pressure and bowing of the "J" stiffeners was solved and good quality lightly-loaded design with thin-cap-thickness panels were fabricated. However, unsatisfactory distortion still occurred in the thick caps of heavily-loaded design panels.

2.2.3 Aluminum Mandrels With Rubber Pressure Mandrels

Aluminum tooling members (1) as shown in Figure 49, were machined for each side of the flange of the "J" stiffener and level with the top of the cap. The aluminum mandrels were then placed on a dummy skin (2) made of aluminum, and the retainer frame (3) was located around these details and on the tool plate (4). A dummy plate was inserted between the aluminum mandrels to simulate the "J" web thickness (5). Silicone rubber was mixed, degassed, and poured to the top level of the aluminum mandrels to make the rubber mandrels (6). Aluminum cap plates were cut the width of the aluminum mandrels to enclose the cap (7). The expansion of the silicone rubber during the actual panel curing cycle applied pressure on the retainer frame and forced the aluminum mandrels together to obtain compaction pressure on the web of the "J." Normal autoclave pressure applied the compaction pressure for the panel skin and caps of the "J" stiffeners.

An advantage of this tooling concept was that it did not require a complete dummy part to cast the silicone pressure mandrels. Mandrels were easily removed, and the dimensional critical areas were controlled by solid metal.

Results of Part Fabrication

The panels made by this tooling concept were of variable quality. The troublesome area was the upper cap, where a matched mold to stops condition existed. The cap pressure plates would sometimes bottom against the aluminum mandrels and cause voids in the caps.

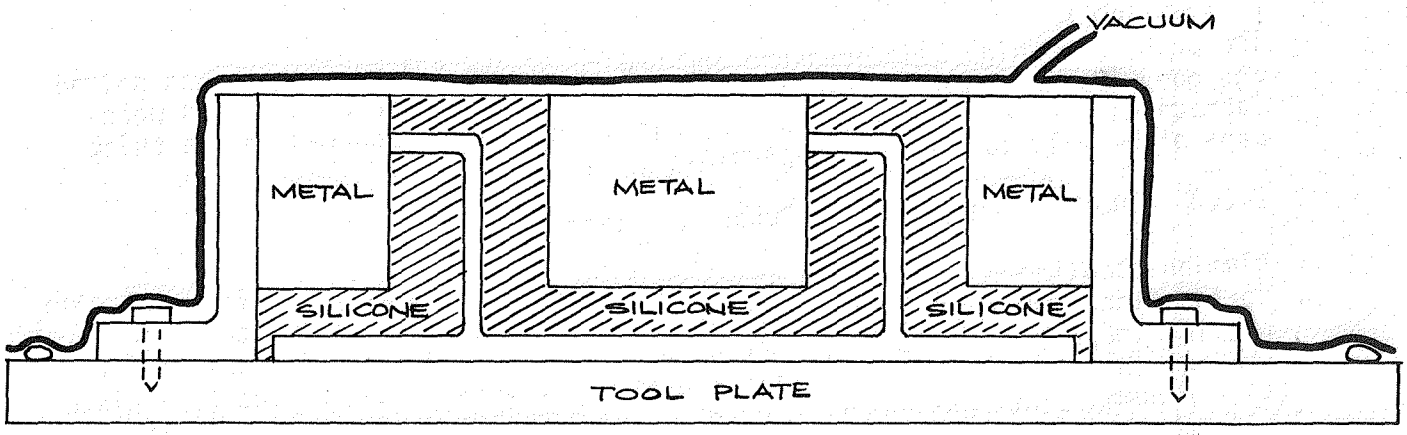

FIGURE 48. METAL INSERTS IN RUBBER MANDRELS

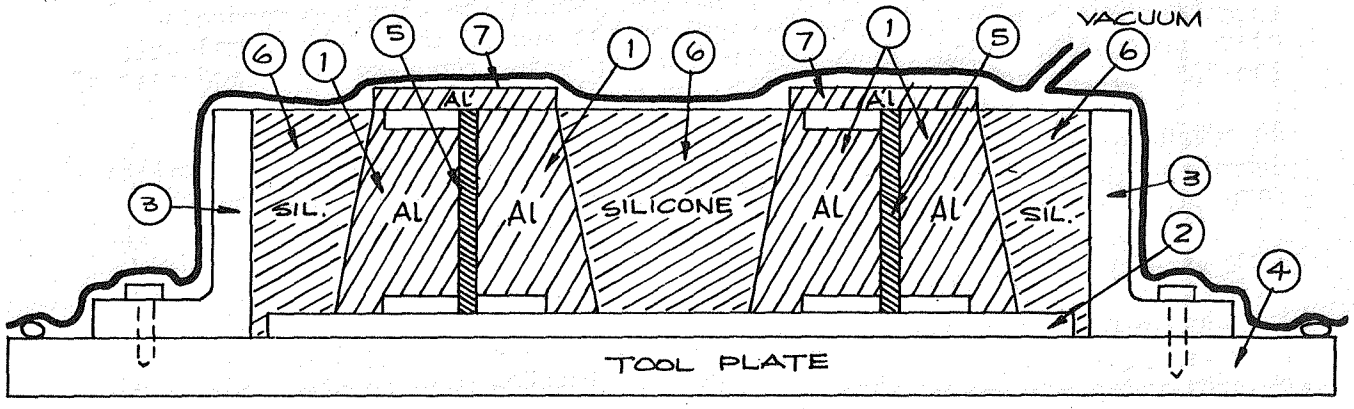

FIGURE 49. ALUMINUM AND RUBBER MANDRELS

2.2.4 Aluminum Mandrels, Pressure Cap, and Rubber Pressure Mandrels

This tooling concept was identical to that described in Section 2.2.3, with the exception of the aluminum mandrels in the area of the cap of the "J" sections. In this case, the mandrels were machined with extra depth in the area of the cap (1). (See Figure 50.) A smaller cap pressure plate (2) was made to fit between the two aluminum mandrel details that floated during the panel processing cycle to obtain autoclave pressure in this area.

Results of Panel Fabrication

This tooling concept made good quality "J" stiffened panels with a minimum of problems. It was restricted to the heavier load carrying panel designs that had separate "J" stiffeners. It would not be feasible to produce panels with the lightly-loaded continuous inner skin design concept first used in Section 2.2.1.

2.3 Typical "J" Stiffened Panel Assembly Methods

All "J" stiffened panels were layed up and assembled in one of two techniques, depending on the light load continuous ply or medium load separate "J" panel and tool design.

2.3.1 Lightly-Loaded "J" Assembly

The outer skin was layed up on the tool plate and densified under vacuum pressure for 10 minutes at 200°F. The aluminum retaining frame was then placed on the tool and around the skin. (See Figure 51A.)

The inner skin, web, and cap details were cut from layed up and densified sheets of prepreg material of the desired fiber pattern. Starting from the left side of the panel, the first skin/web detail was formed on the silicone/aluminum mandrel and located on the outer skin and next to the support frame. (See Figure 51B.) The cap buildup was located in position.

The center detail, including the first "J," the center inner skin, and second "J" web and cap was formed on the center silicone/aluminum mandrel and located on the outer skin and against the first "J" web. (See Figure 51C.)

The right side detail of cap/web/inner skin was formed on the silicone/aluminum mandrel and located on the inner skin to fill the space between the second "J" web and the right side of the support frame. (See Figure 51D.) The panel was placed in a conventional nylon vacuum bag and cured in the autoclave. (See Figure 51E.)

Results of Panel Fabrication

The panels with light load and thin "J" caps were of good quality.

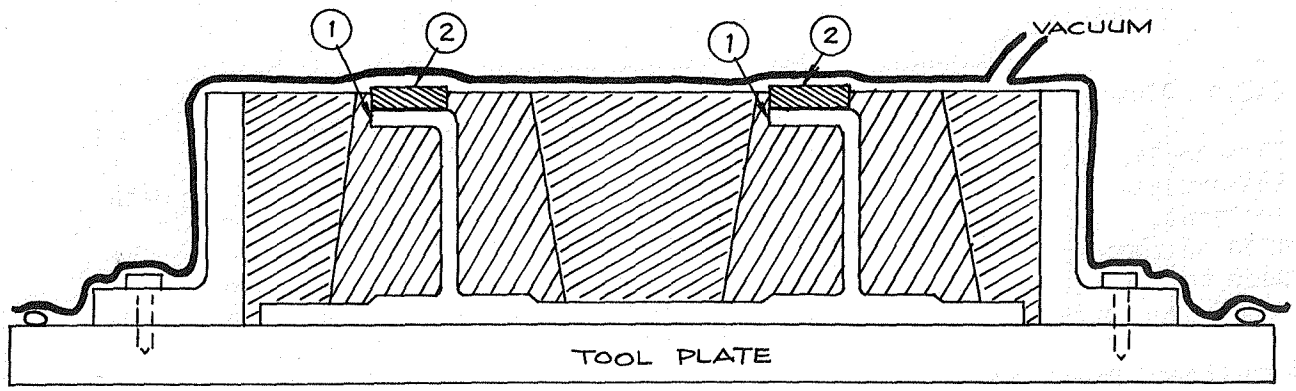

FIGURE 50. ALUMINUM MANDREL AND CAP WITH RUBBER PRESSURE MANDRELS

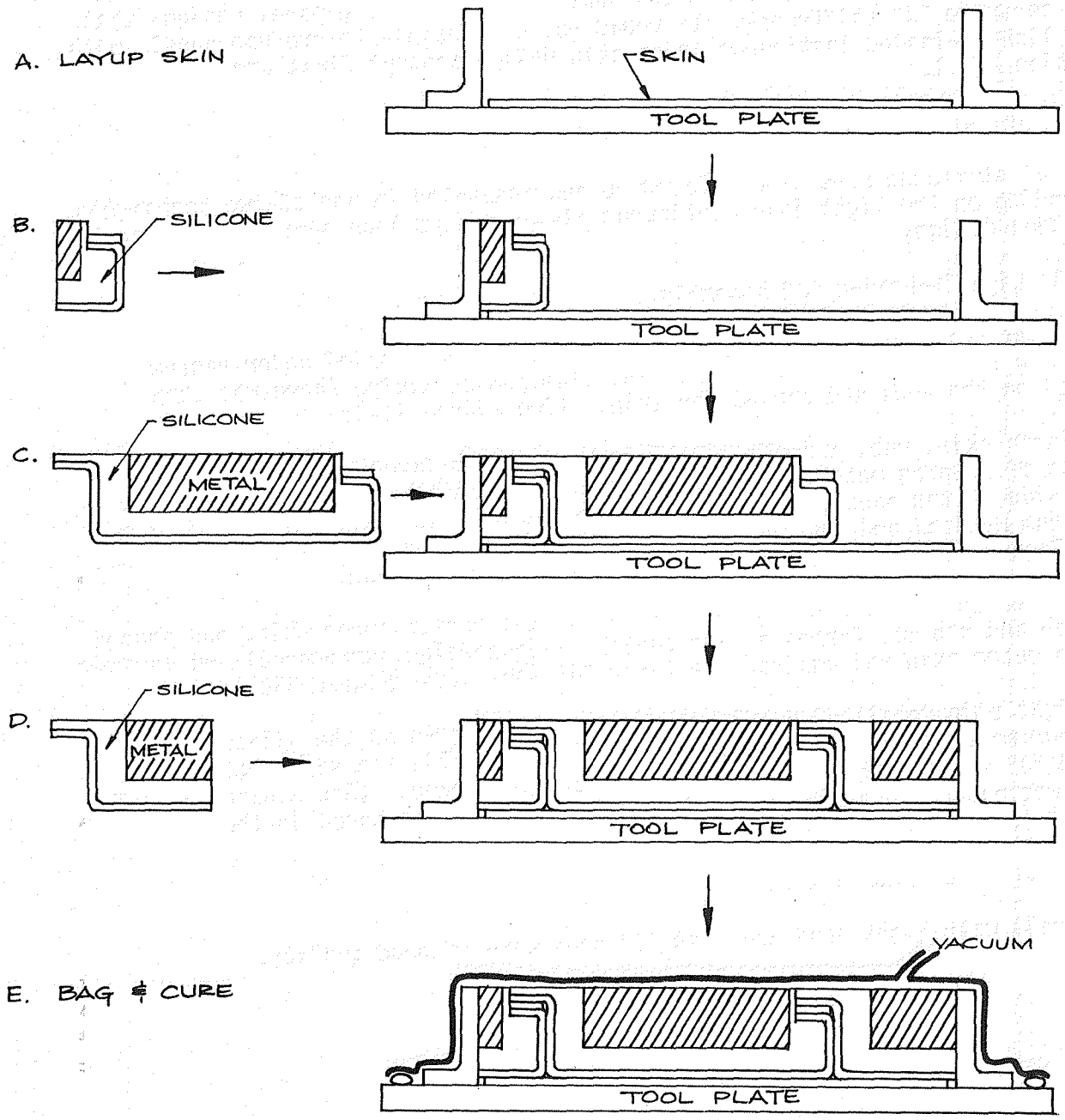

FIGURE 51. LIGHT "J" PANEL ASSEMBLY

2.3.2 Best Method for Fabrication of Medium-Loaded Separate "J" Panel Assembly

The outer skin was layed up on the tool plate, and the restraining frame was placed on the tool plate (Figure 52A). The first side pressure mandrel was located on the skin and against the restraining frame (Figure 52B). The "J" beam details were layed up, ply-by-ply, on the aluminum mandrels and placed together (Figure 52C). The first "J" detail and tool was located on the skin and next to the side pressure mandrel (Figure 52D). The center pressure mandrel, the second "J" beam assembly, and the closing side pressure mandrel were located on the skin and inside the restraining frame (Figure 52E). Finally, the pressure cap plates were located over the "J" cap details, and the panel was placed in a nylon vacuum bag and cured in the autoclave by standard procedure. (See Figure 52F.)

Figure 53 shows the detail of the tool plate and support frame and the silicone rubber and aluminum internal mandrels. Figure 54 shows the mandrels assembled, without the graphite layup, as if it were ready to insert in the support frame on the skin tool.

Results of Panel Fabrication

This method was the best method for fabrication of "J" stiffened panels with thick caps. All such panels were of good uniform dimensional tolerances and of void free laminate quality. Figure 55 shows a two stiffener medium load "J" stiffener panel with each end potted in epoxy resin. The ends were machined flat and parallel in preparation for a compression test. Figure 56 shows an end view of the same panel.

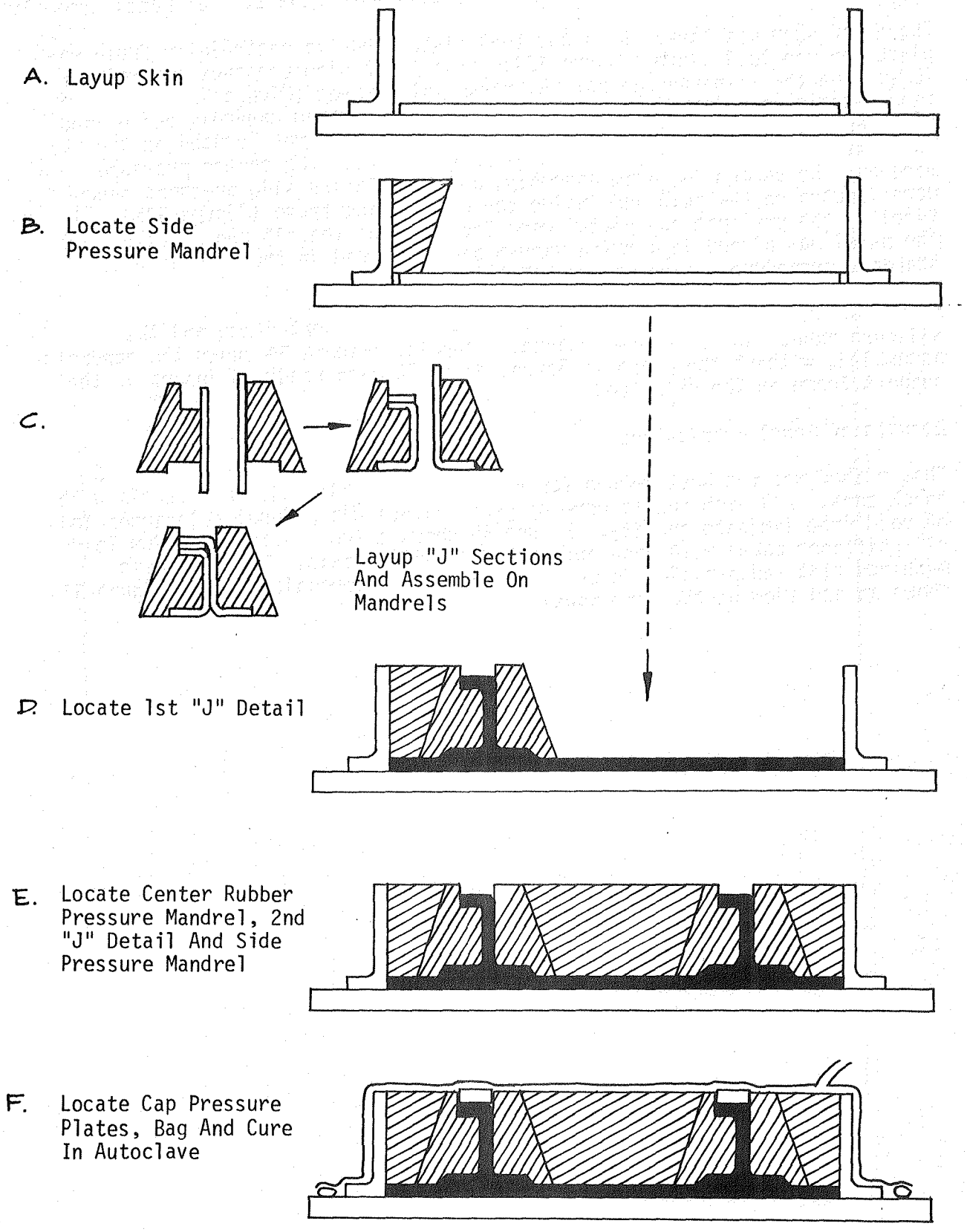

FIGURE 52. MEDIUM LOAD - SEPARATE "J" PANEL ASSEMBLY

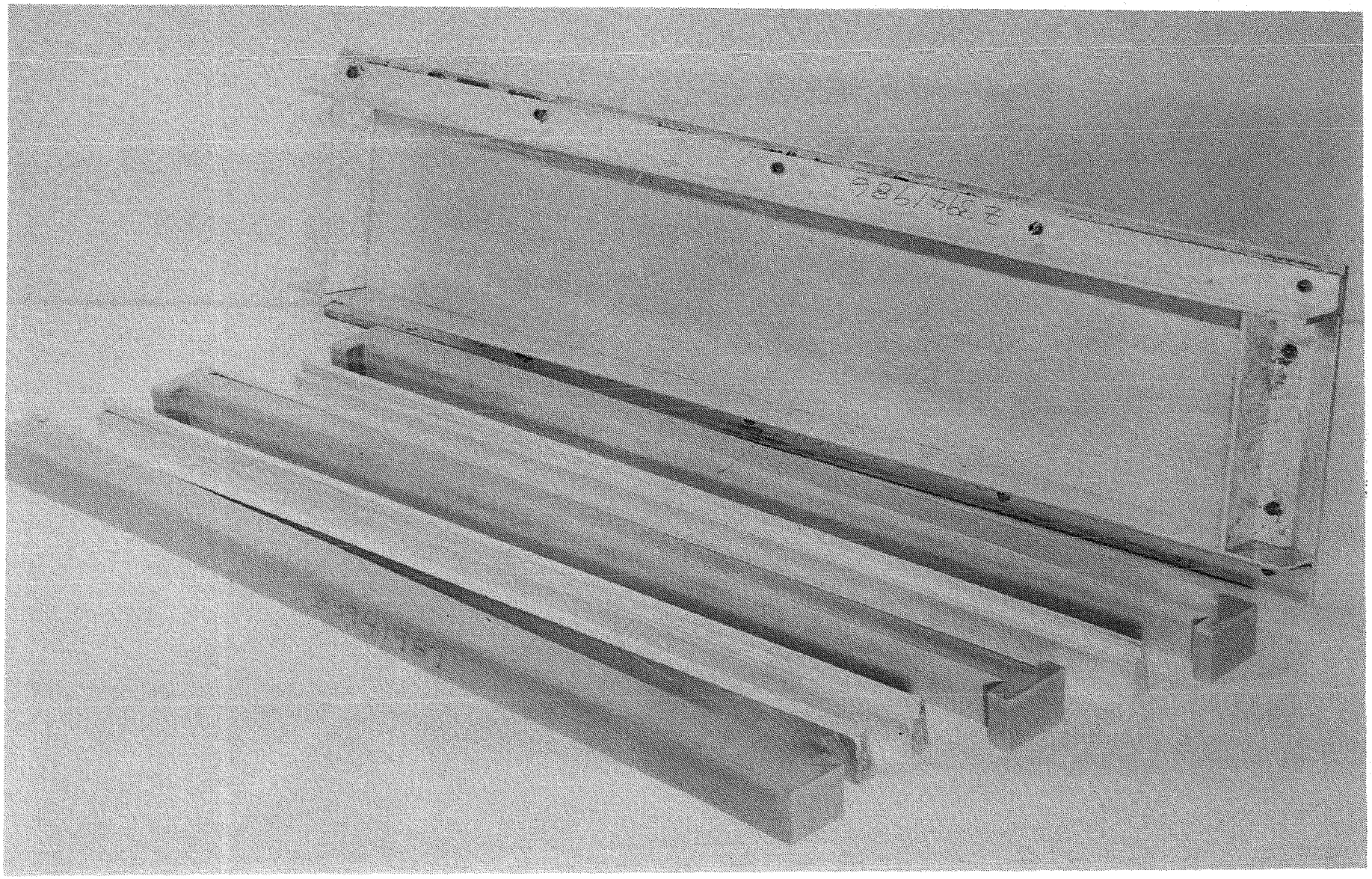

FIGURE 53. DETAILS OF TOOL FOR "J" STIFFENED PANEL

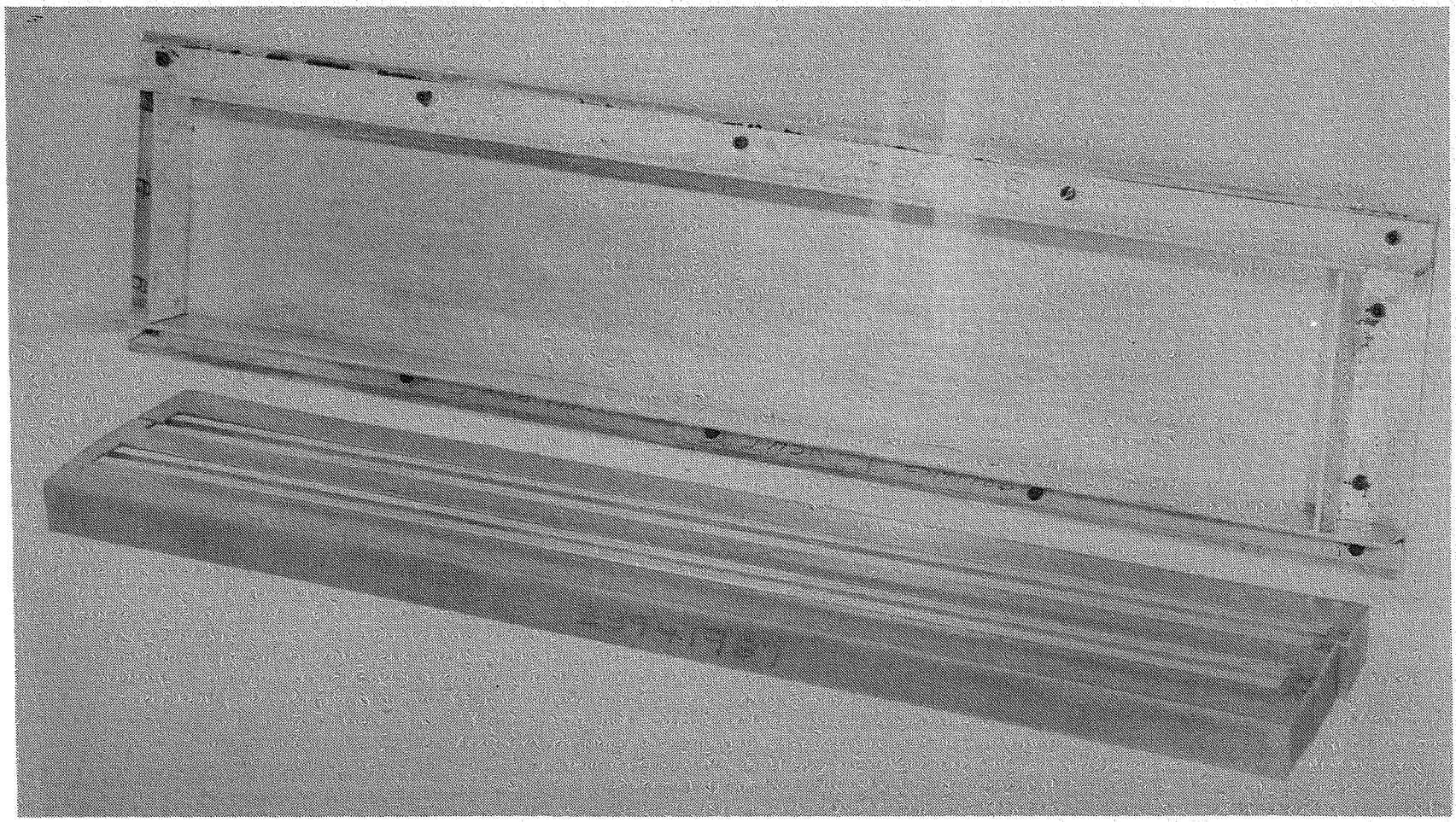

FIGURE 54. "J" MANDREL TOOLS READY FOR PLACEMENT IN SUPPORT FRAME

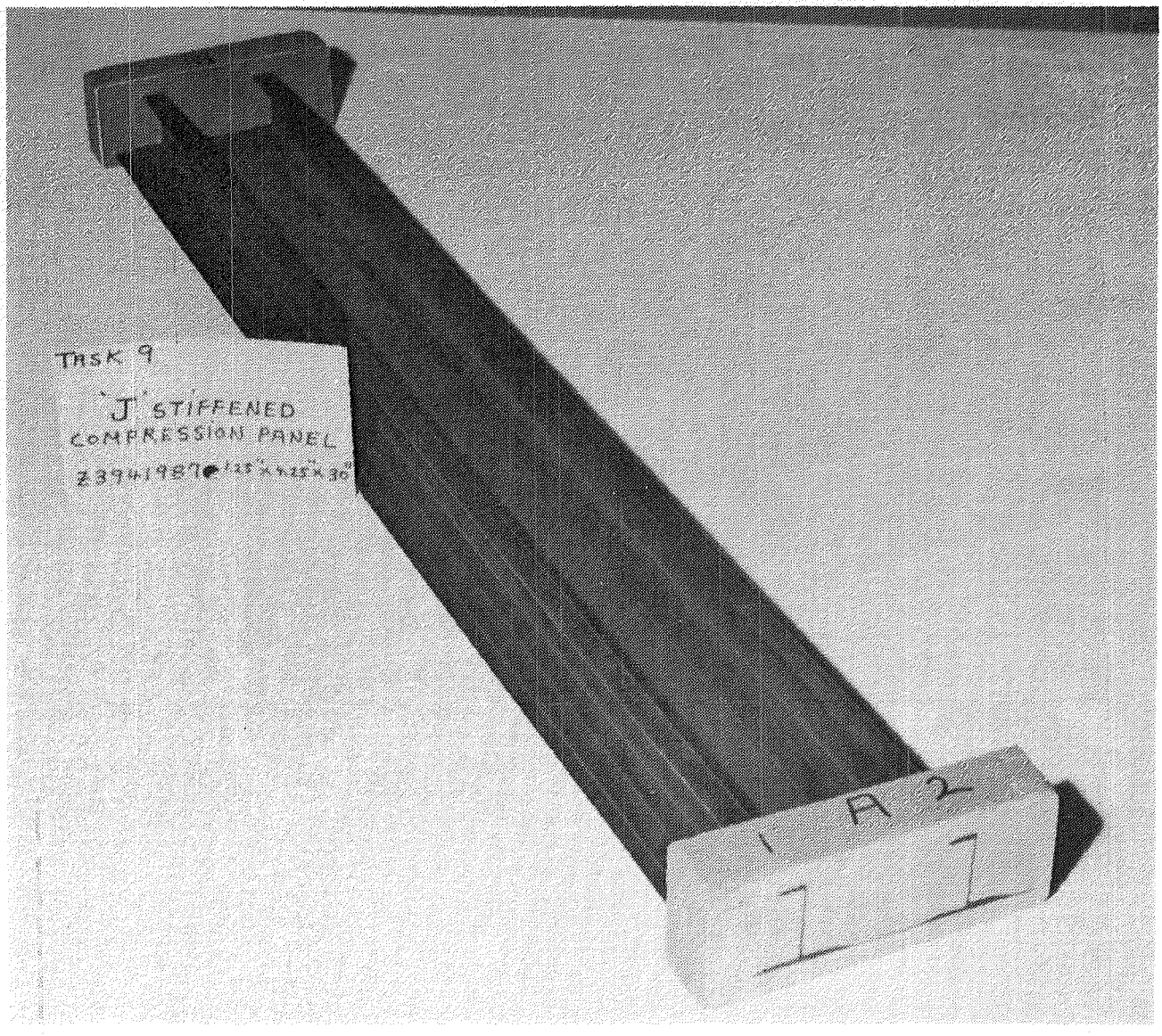

FIGURE 55. "J" STIFFENED PANEL WITH POTTED ENDS

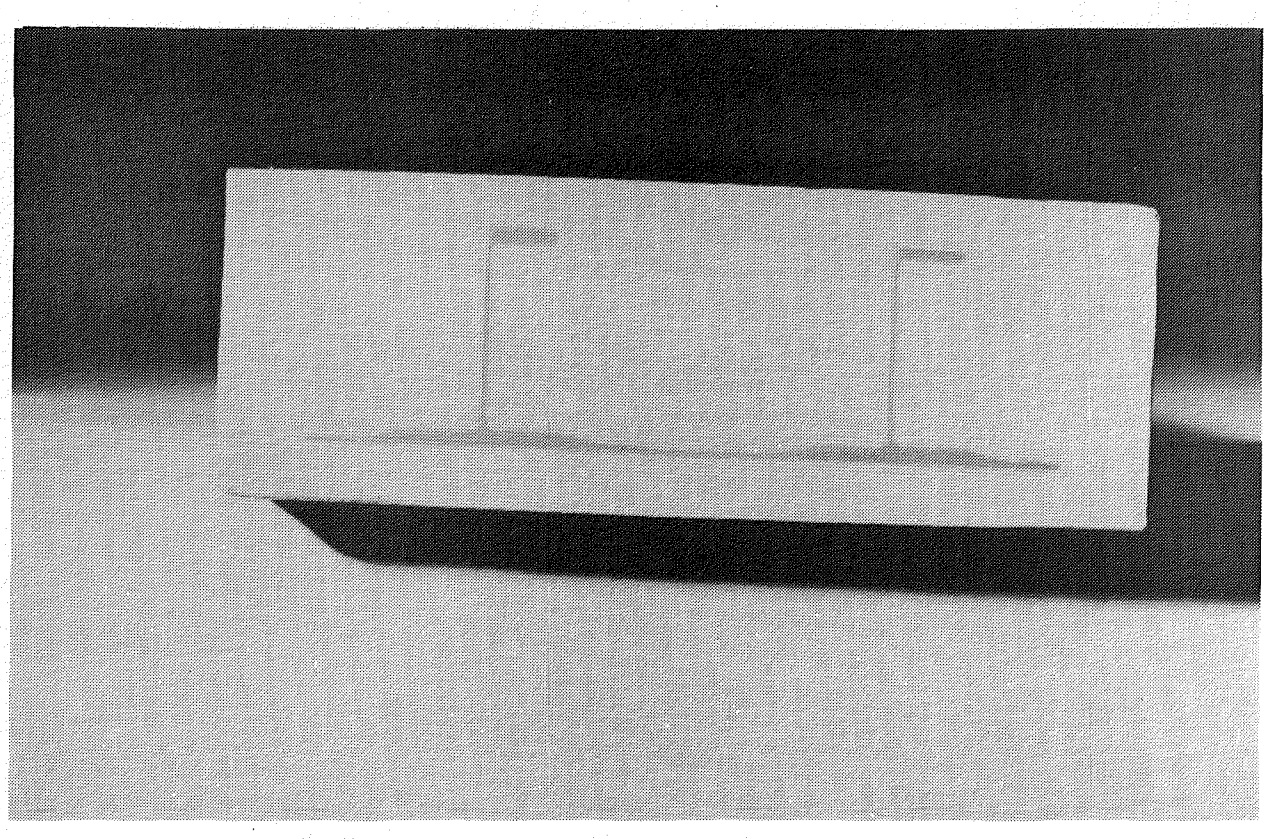

FIGURE 56. END VIEW - "J" STIFFENED PANEL

TASK 3 SINE WAVE "I" STIFFENERS

The sine wave "I" stiffened panel was designed for medium load carrying conditions. This section presents the method of tooling, layup, and assembly for this panel.

3.1 Sine Wave "I" Stiffened Design Concept

Information obtained from prior experience with "J" stiffened panels was used in the design and fabrication considerations for this panel. The design features an outer skin (5) and "I" beam stiffeners with the web (1) and (2) of the beam as a vertical sine wave running the length of the stiffener. (See Figure 57.) Extra 0° reinforcement is in the upper cap (3) and base (4) of each "I" stiffener.

3.2 Sine Wave "I" Tooling and Tool Fabrication

The tooling for the sine wave "I" stiffened panel consists of the following pieces (see Figure 57):

(A) A flat outer skin tool plate.

(B) A metal retainer frame around the periphery of the panel to contain the silicone pressure mandrels (identical to the "J" beam tooling).

(C) Matched left and right side metal mandrels for the sine wave webs with recess for the upper and lower flanges of the "I" stiffeners.

(D) Metal pressure plates (floating) to apply pressure on each individual upper "I" stiffener cap.

(E) Cast silicone rubber between the retainer frame and the first metal sine wave mandrel, between the center metal sine wave mandrels, and between the opposite sine wave mandrel and the retainer frame. Figure 58 shows a photograph of the tooling details of the flat tool plate, the retainer frame, the machined aluminum sine wave mandrels, and the silicone rubber pressure castings.

3.3 Sine Wave Panel Fabrication

The step-by-step fabrication of the sine wave "I" stiffened panel was very similar to the best procedure for a "J" stiffened panel as described in Section 2.3.2.

See Figure 59 for the location of the details and assembly method used for the sine wave panel. The outer skin was layed up on the tool plate and densified under vacuum pressure for 10 minutes at 200°. (See Figure 59A.) The retainer frame was placed on the tool and around the skin. (See Figure 59B.) The lower flanges of the "I" stiffeners were cut to size from a densified preplied sheet of material and located in position on the outer skin. (See Figure 59B.) The web, upper flange, and lower flange of the "I" beam and a portion of the inner skin was layed up on the first metal mandrel section and located in position on the left side lower flange doubler. (See Figure 59C.)

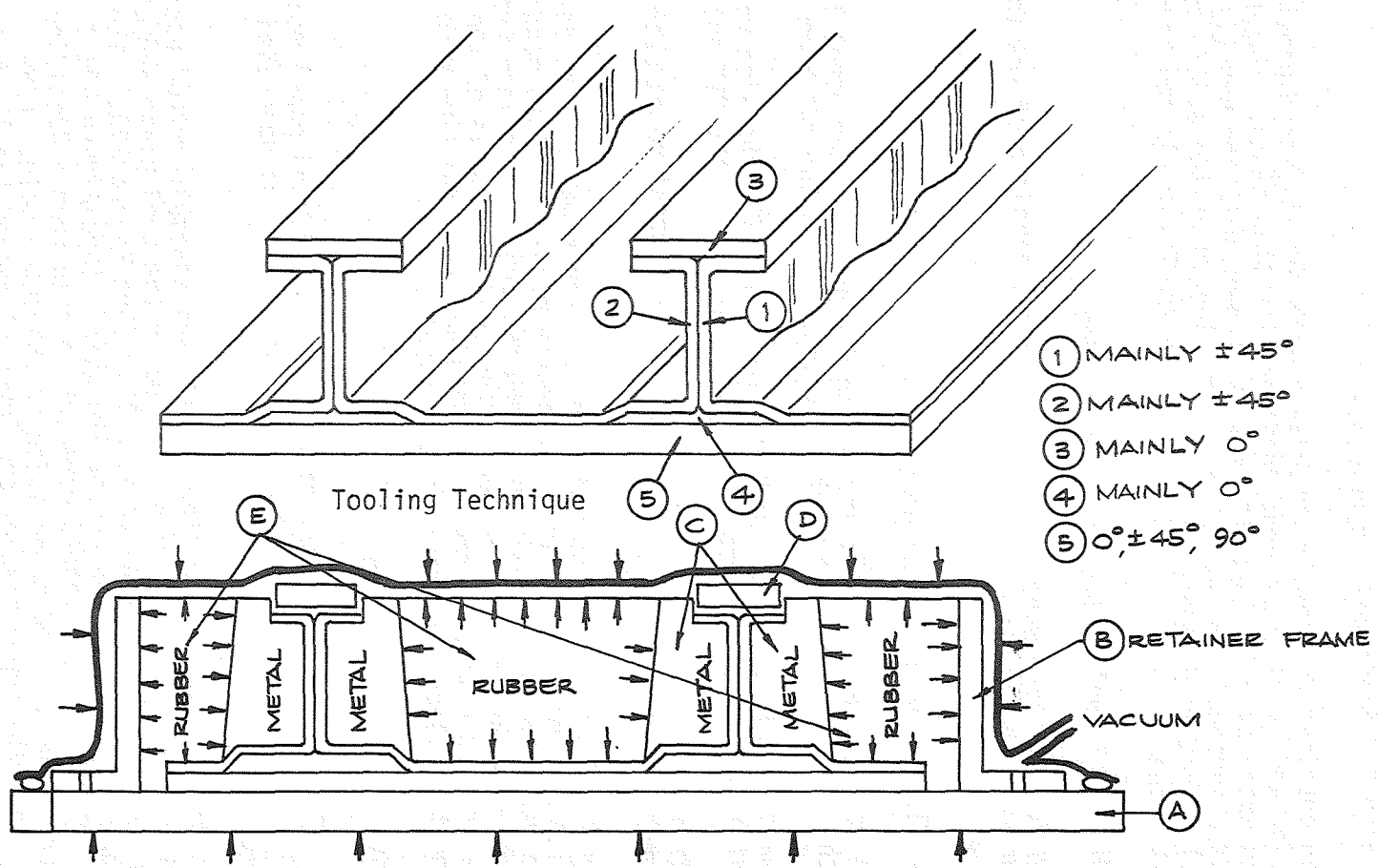

Good Quality Parts and Dimensions

FIGURE 57. SINE WAVE "I" STIFFENED PANEL

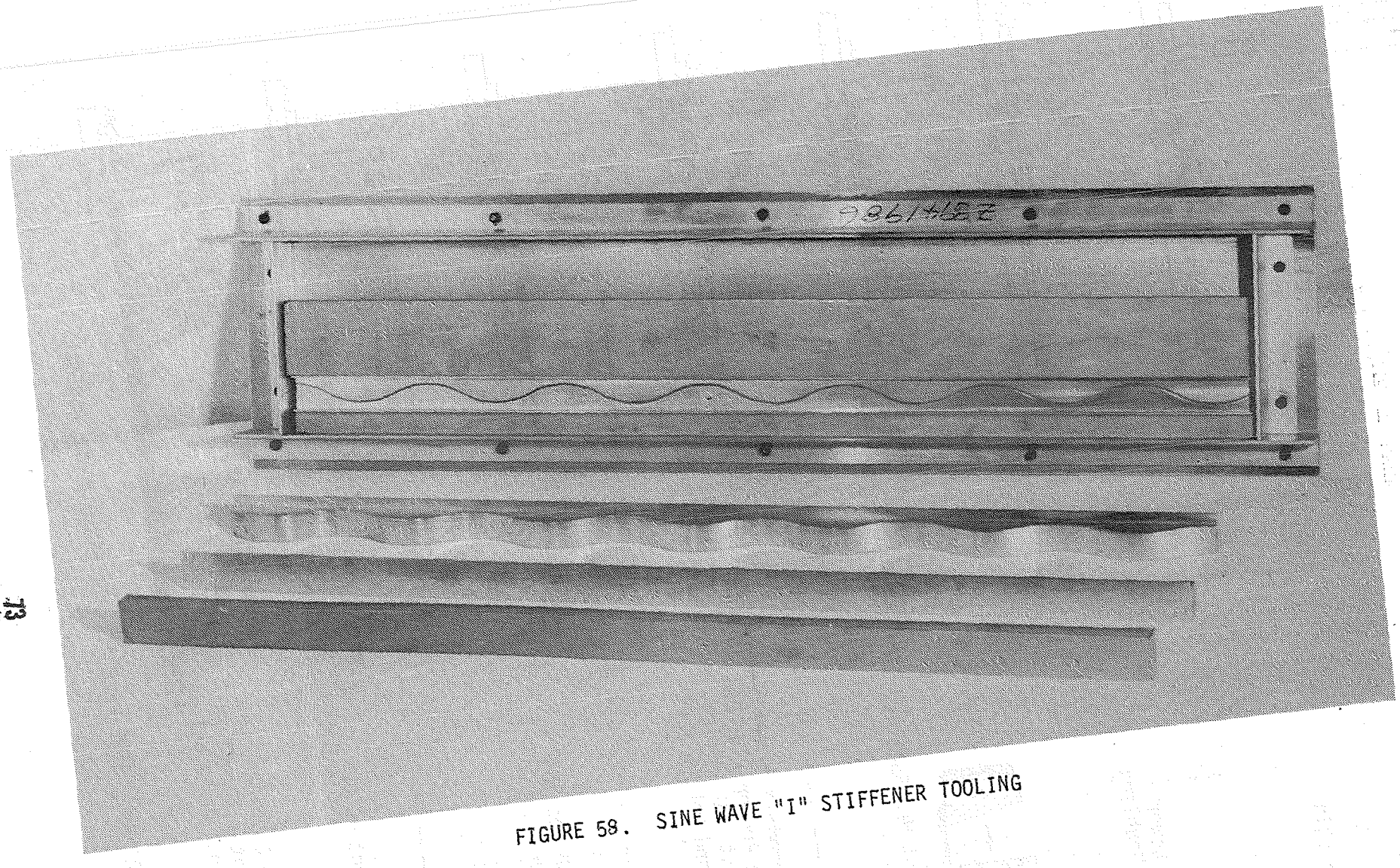

FIGURE 58. SINE WAVE "I" STIFFENER TOOLING

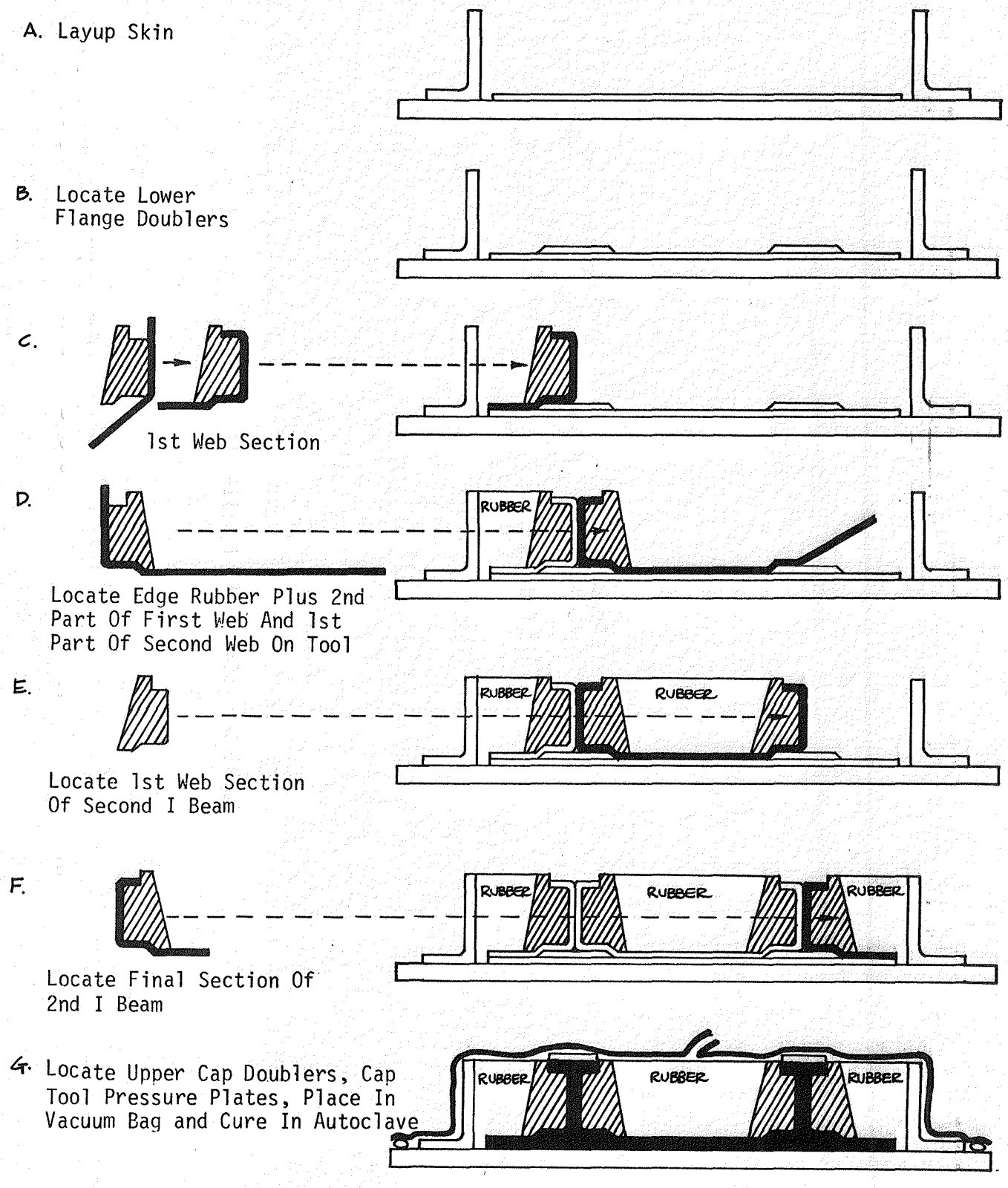

FIGURE 59. SINE WAVE "I" STIFFENED PANEL ASSEMBLY

The second half of the web, upper flange and lower flange of the first "I" was folded on the second tool section and located in place against the left side sine wave web. The rubber pressure mandrel was located between the retainer frame and the aluminum mandrel. In addition, this piece of material covered the inner skin area to the next doubler and was of size for first half thickness of the next "I" beam web. (See Figure 59D.) The center rubber pressure mandrel was located in position, and the first tool section of the second "I" beam was placed on the layup and positioned against the rubber pressure mandrel. The continuous skin from the first "I" beam was then folded against the second "I" beam tool section and over the upper cap area, (See Figure 59E.) The final half section of the second "I" beam was located on the aluminum mandrel, then placed in position against the first part of the second beam web and the lower doubler and outer skin. (See Figure 59F.) The final cast rubber pressure pad was then located at the right edge of the panel. Preplied material was cut and located in position for the upper cap doublers and, the upper cap aluminum pressure pads were located in position. (See Figure 59G.) The panel was enclosed in a nylon pressure bag and cured in the autoclave.

Results of Panel Fabrication

The panel had a high quality appearance. The dimensional control and the void content of the panel were of good quality.

TASK 4. SOLID BLADE STIFFENER

The solid blade stiffened panels were all designed to meet typical heavily-loaded commercial aircraft wing requirements. Thus, these panels had heavy thick skins and stiffeners. The general construction of two types of blade stiffened panels is shown in Figures 60 and 61. The thickness, or number or plies of graphite material required for each segment, varied depending on the design requirements.

4.1 Flat Aluminum Plate and Aluminum Angle Tooling

The tooling supplied for fabrication of the first blade stiffened panel (see Figure 62) consisted of:

(a) 3/4 inch aluminum tool plate for outer skin surface.

(b) Wooden mandrels for layup and densification of blades.

(c) Aluminum angles as tools for support of the blade walls during cure.

(d) Aluminum caps for a bridge between the aluminum angles.

The outer skin ⑤ (see Figure 63) was layed up as a 32-ply 0 $\pm$ 45°, 90° pattern per the Engineering drawing. The skin was placed under a vacuum bag and densified under full vacuum for 10 minutes at 250°F and cooled under pressure to room temperature.

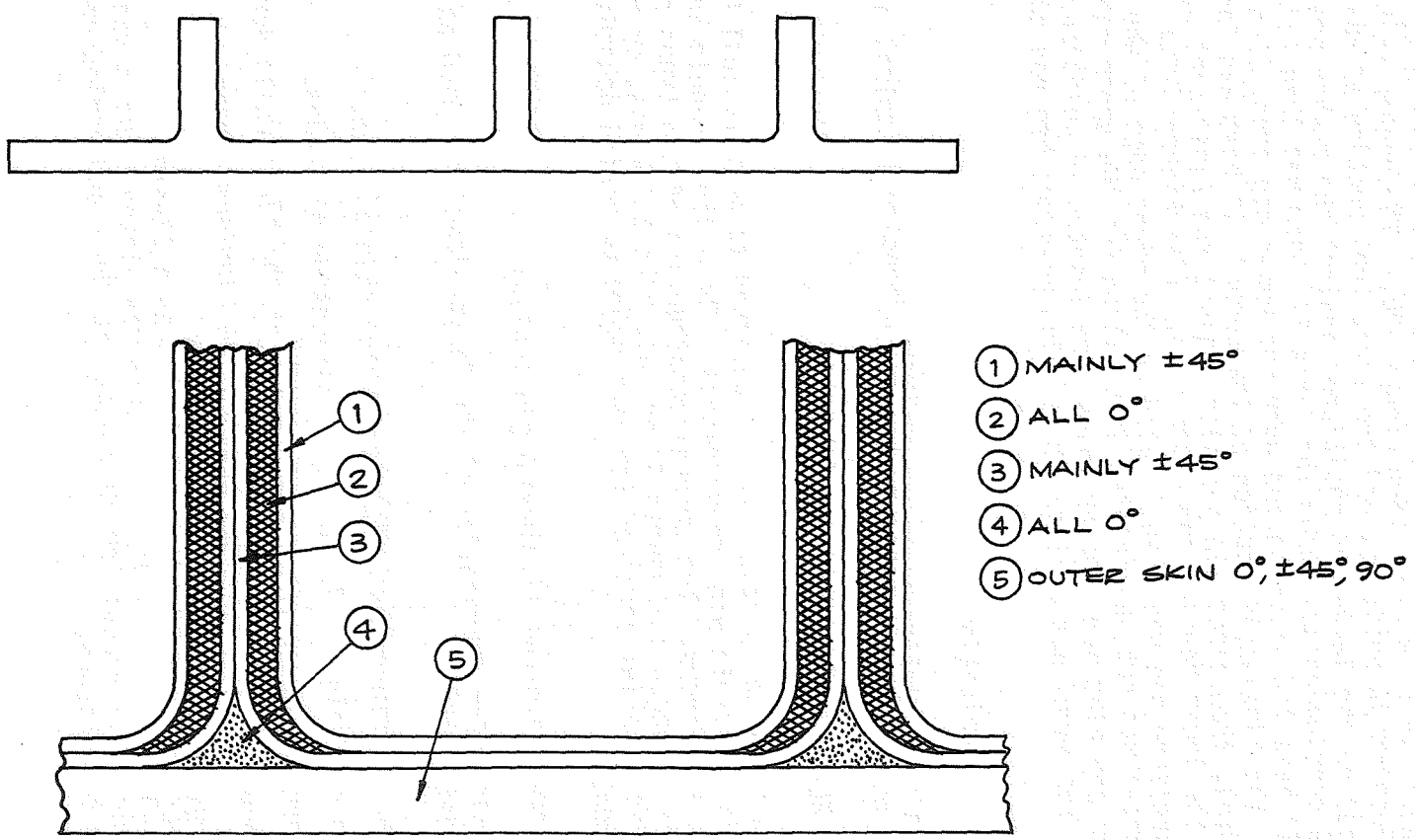

FIGURE 60. ONE SOLID BLADE STIFFENED PANEL CONCEPT

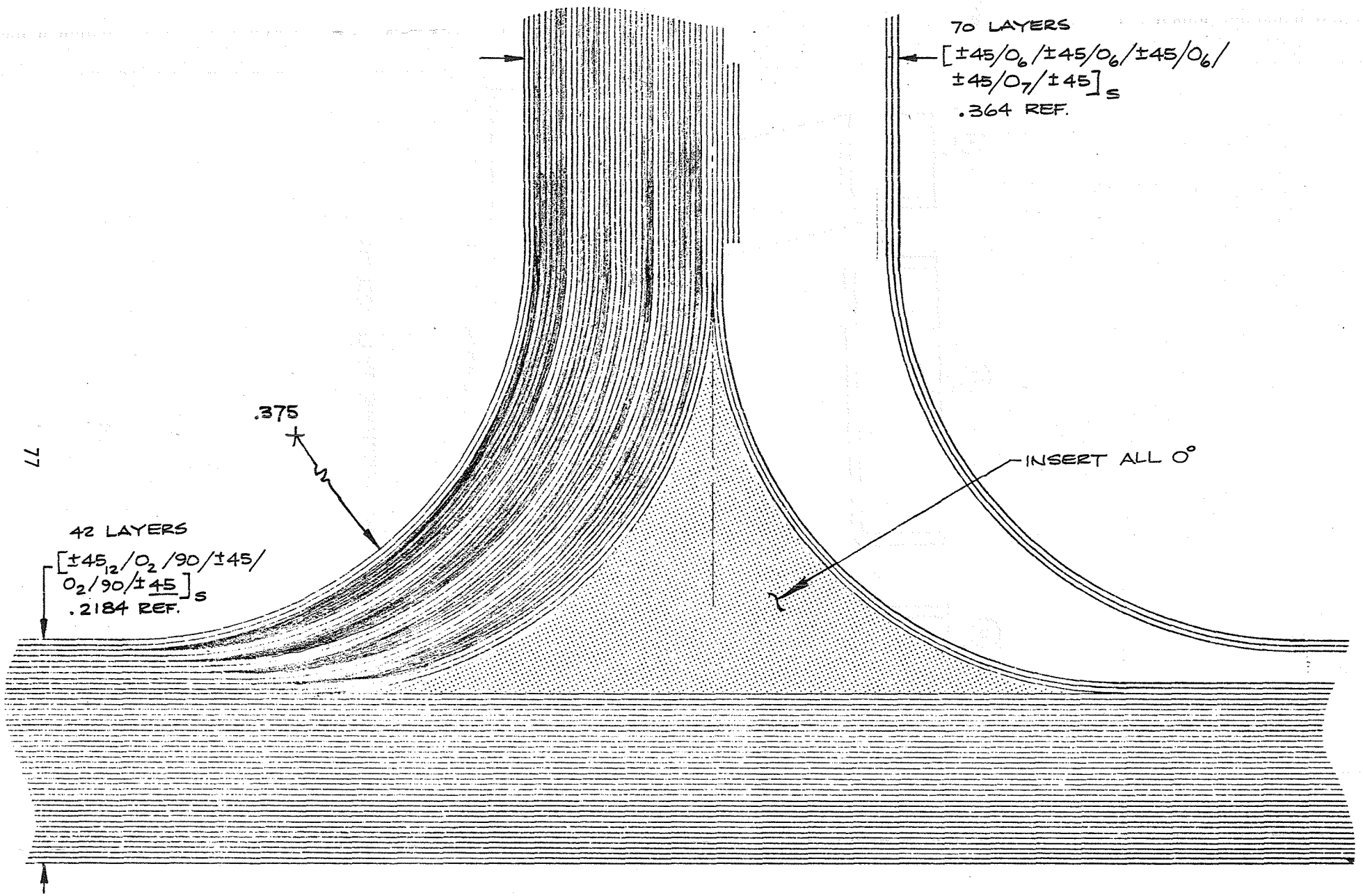

FIGURE 61. DETAIL OF AN ALTERNATE BLADE STIFFENER DESIGN

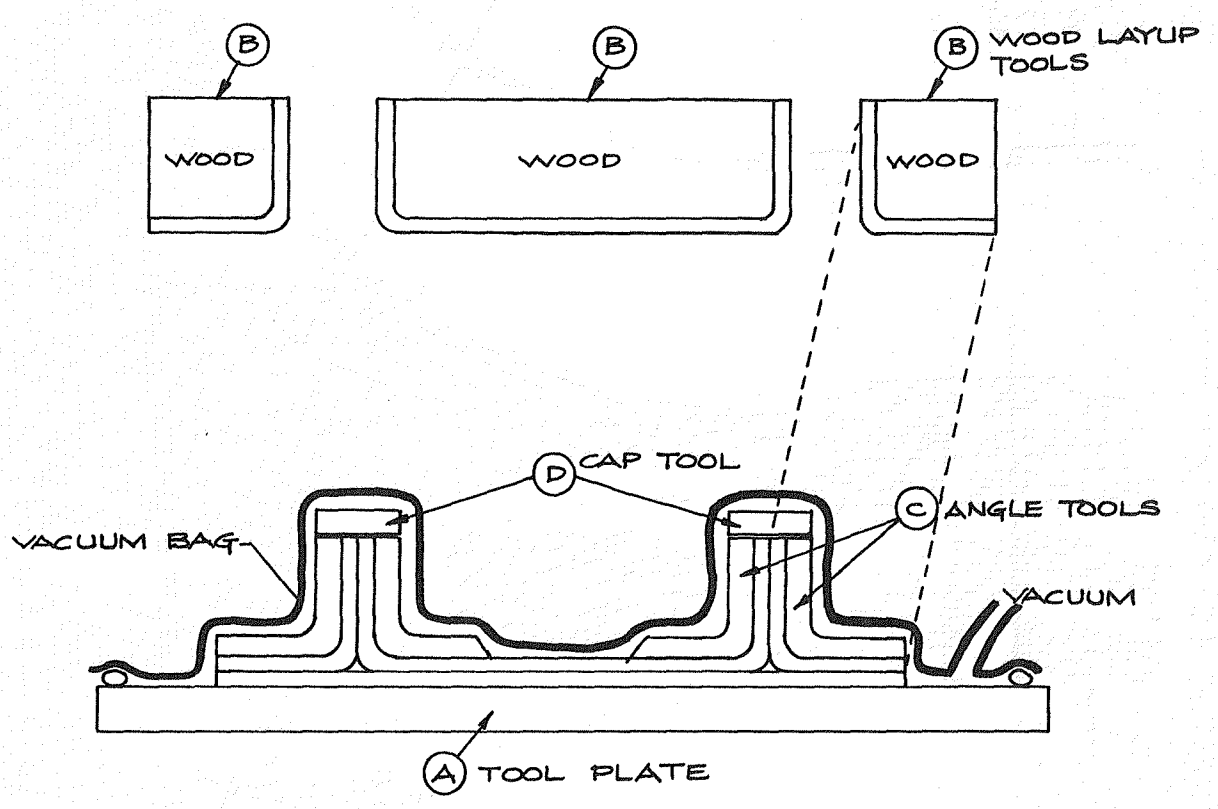

FIGURE 62. ALUMINUM ANGLE TOOLING

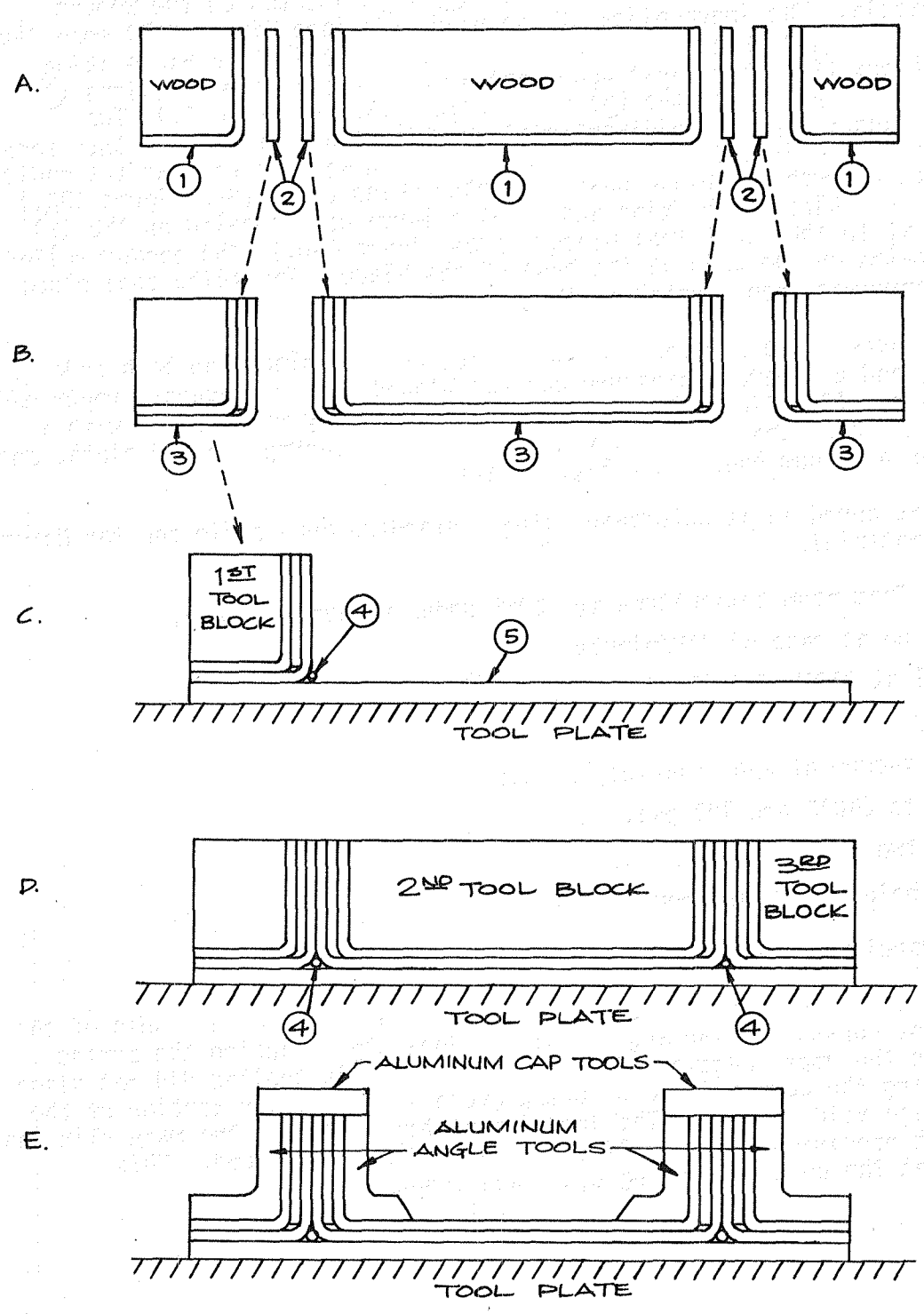

FIGURE 63. BASIC BLADE LAYUP STEPS

The outer plies of the blade ① (see Figure 63A) were layed up as four-ply ± 45° skins on the three wooden mandrels. The two 24-ply 0° blade inserts 2 for each blade were layed up as flat panels, densified under vacuum pressure and 250°F for 10 minutes and then, upon cooling, cut to size for length and width. The four blade inserts ② were located on the wooden mandrel details. The inner plies of the blade ③ (see Figure 63B) were layed up as four-ply ± 45° skins on the wooded tools over the outer blade skins ① and doublers ②. The first wood tool block and skins and doublers ①, ②, and ③ were placed on the ⑤ outer skin. (See Figure 63C.) Two 1 1/2 inch wide strips of unidirectional graphite tape were rolled into rods, approximately 3/16-inch diameter and the first rod was inserted at the radius intersection between the blade base and outer skins ④. (See Figure 63C.) The second tool block with skins and doubler layup were located on the ③ skin and next to the first tool block. (See Figure 63D.) The second rolled rod was located on the skin at the base of the blade. The third tool block and skin layup was then located on the ⑤ skin.

The wooden blocks were removed. Aluminum angles were placed on each side of each blade, and a separate pressure cap was placed over the exposed upper edge of each blade. (See Figure 63E.) This entire assembly was covered with a layer of Armalon separator cloth, eight layers of Mochburg bleeder cloth, and placed under a vacuum bag. (See Figure 64.)

The panel was cured in an autoclave using a standard cure cycle for the Narmco 5208/T-300 material.

- Heat from room temperature to 250°F under vacuum pressure.
- Heat up at rate of 2°F/minute.
- Dwell at 250°F for 60 minutes under vacuum pressure.
- Apply 100 psi autoclave pressure.
- Vent vacuum at approximately 25 psi.
- Heat to 350°F and 100 psi.
- Cure two hours at 350°F and 100 psi.
- Cool below 200°F and remove pressure.

Results of Panel Fabrication

This fabrication process produced a poor quality panel. The thickness of the blades was not constant. The angle tool sections tipped during the curing cycle to make the upper edge of blades thin. The angle tooling did not slide together during the compaction and curing cycle and the lower portion of the blades had high void content. The location of the blades on the main skin was not held with precision. The quality of the main skin was good. This indicated that the cure processing cycle was proper.

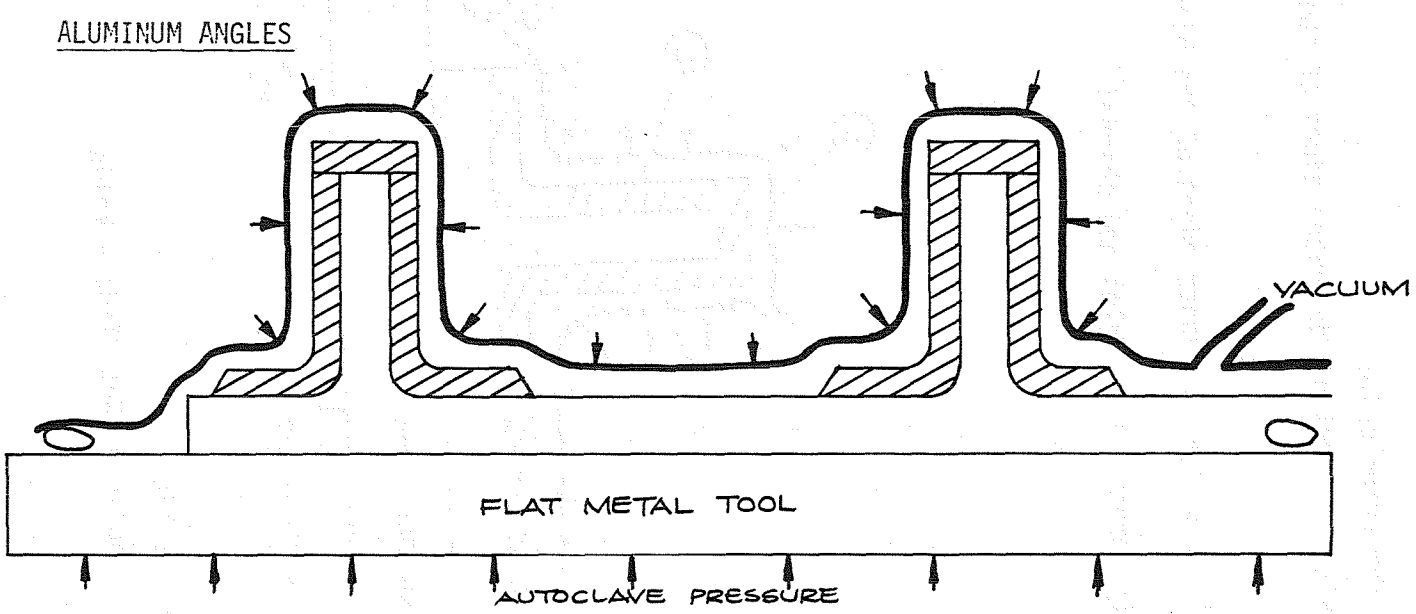

PROBLEMS

1. Poor Location
2. Poor Thickness - Angles Tip
3. Poor Blade Quality - Angles Do Not Slide - Voids

FIGURE 64. SOLID BLADE STIFFENED PANEL MADE WITH ALUMINUM ANGLE TOOLING

4.2 Flat Aluminum Plate With Channel and Angle Tooling

The tooling supplied for the second fabrication concept for the blade stiffened panel consisted of (see Figure 65):

- (A) 3/4 inch aluminum plate for outer skin.
- (B) Aluminum angles as tools for support of the outer edges of the blade walls during cure.
- (C) Aluminum channel as tool for support of inner edges of the blade walls during cure.
- (D) Aluminum caps for a bridge between the angles and channel.

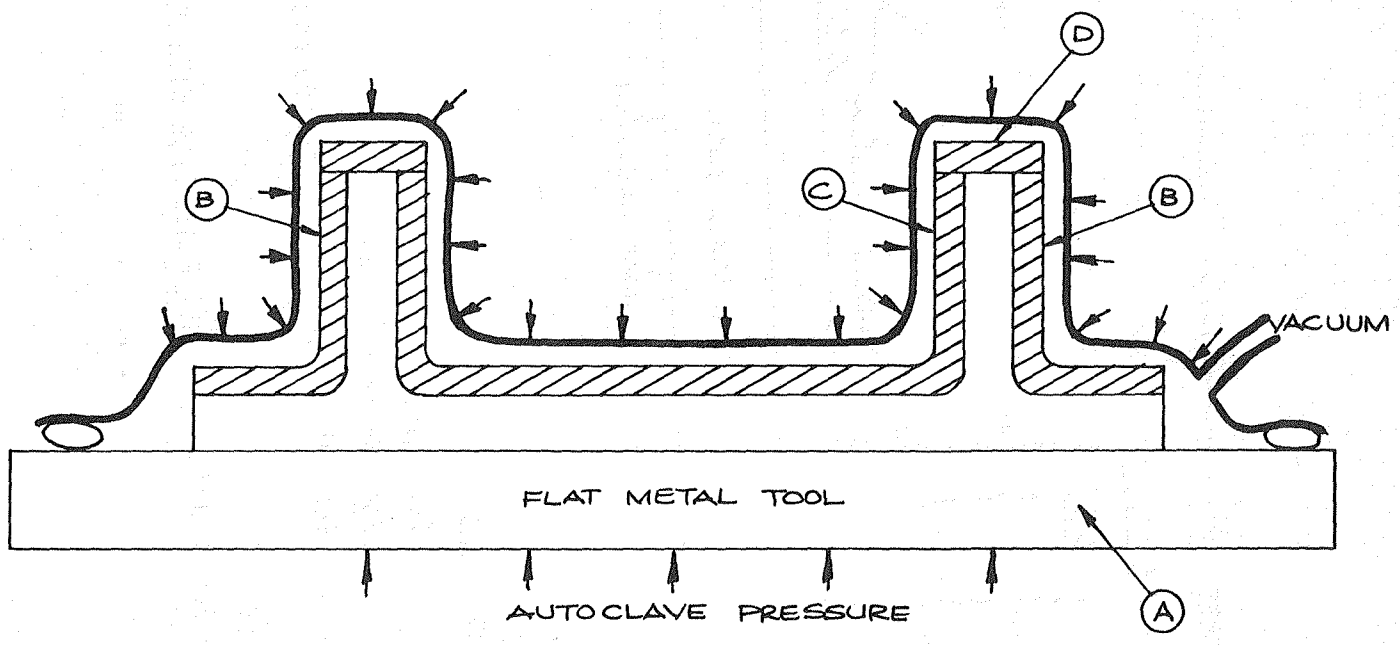

PROBLEMS

1. Poor Thickness - Angles Tip
2. Poor Blade Quality - Angles Do Not Slide - Voids

FIGURE 65. SOLID BLADE STIFFENED PANEL MADE WITH ANGLES AND CHANNEL TOOLING

The same general fabrication procedure was used as in Section 4.1. The main tooling change was the use of the aluminum channel tool section in place of all aluminum angle tools. (See Figure 65.) The objective was to keep one side of the blade at a right angle and to locate the distance between blades at a precision dimension. A significant fabrication change was elimination of the wooden lay-up mandrels. The blade lay-up and densification cycles were accomplished directly on the aluminum angle and channel tools.

a. The outer skin (5) was layed up and densified on the large flat plate. (See Figure 63.)

b. The main blade 0° reinforcement inserts (2) were layed up flat, densified, and cut to correct size.

c. The blade inner skin (1), the reinforcement (2), and the blade inner skin (3), were layed up on the angle and channel tooling sections and densified.

d. The filler (4) was rolled from a 1 1/2 inch band of unidirectional tape and inserted at the intersection of the heel of the blade between the angle and channel tool.

e. The entire panel was placed in a vacuum bag and cured by the same standard curing cycle (same as Section 4.1).

Results of Panel Fabrication

The fabrication process produced a poor quality panel. The thickness of the blades was again not constant. The outer angle tools tipped, rather than slid side ways during the compaction and cure cycle. The upper edge of the blades were thin, and the lower edge of the blades had high void content. The location of the blades, due to the use of the aluminum channel tool, was good. The quality of the outer skin was good, thus indicating that the cure processing cycle was proper.

4.3 Flat Aluminum Plate and Solid Silicone Rubber Mandrels with Support Frame

The tooling supplied for the third fabrication concept for the blade stiffened panel consisted of (see Figure 66):

A 3/4 inch aluminum plate for outer skin (same as Section 4.1).

B Solid silicone rubber mandrels for the blade walls.

C A metal outer retainer frame to locate and support the silicone rubber.

D Aluminum caps for a bridge over the edge of the blade sections and between silicone rubber mandrels.

The same general fabrication procedure was used as that described in Section 4.1. The tooling change was the use of solid silicone rubber mandrels in place of the aluminum angles. (See Figure 66.) The silicone rubber, when heated in the autoclave to obtain cure of the resin in the laminated panel, expanded faster than the surrounding metal frame. This expansion caused side pressure to develop against the walls of the blade and accomplished the necessary compaction pressure. (See Figure 66.) A wooden "dummy" part was fabricated and used as a mold to cast the solid silicone mandrels. Dapco #38-3 silicone rubber, supplied by "D" Aircraft Company, Placentia, California, was used as the casting mold material. The Dapco #38-3, parts A and B, were mixed, degassed under vacuum, and poured into the mold. The molding was allowed to cure overnight at room temperature and then heated to 120°F for four hours in an oven. The rubber sections were then removed from the mold and post-cured to 350°F for eight hours. Mold release was applied to the silicone mandrels and baked in place for one hour at 350°F.

The blade layup and densification cycles were accomplished directly on the silicone rubber sections. The layup of the outer skin (5) (see Figure 63), the blade "skins" and reinforcement (1), (2) and (3), and the filler (4) were all accomplished as described in Section 4.1.

A metal retainer frame was placed around the assembly against the outer walls of the silicone rubber mandrels. The entire assembly was placed in a vacuum bag and located in an autoclave for cure. The curing cycle was similar to the standard cycle described in Section 4.1. However, the mass of the silicone rubber caused a slow heat rise. The time/temperature/pressure curing cycle was modified as follows:

- Heat from room temperature to 235°F under vacuum pressure.
- Heat up at rate of 0.5°F/minute.
- Apply 100 psi at 235°F.
- Vent vacuum at approximately 25 psi.
- Heat to 350°F and 100 psi.
- Hold 350°F and 100 psi for two hours.
- Cool below 200°F under pressure.

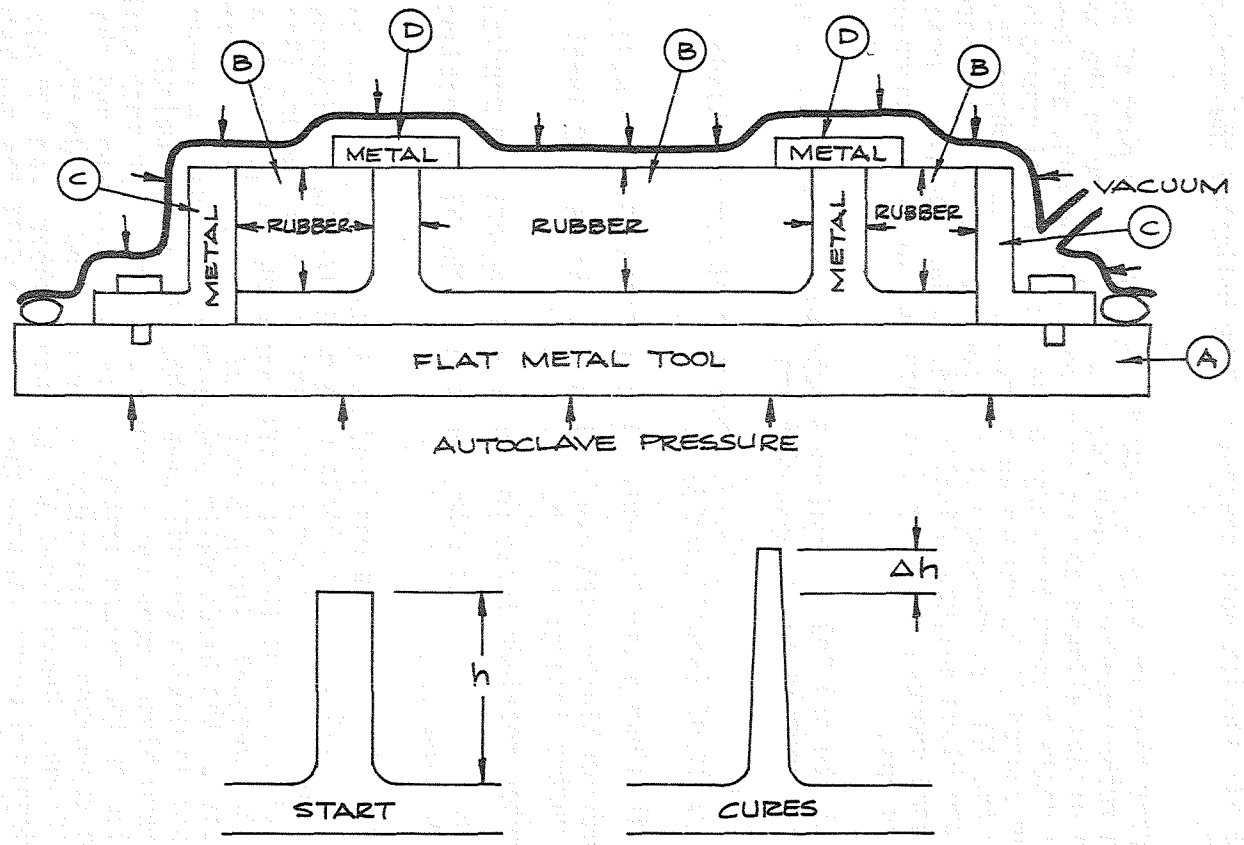

PROBLEMS

1. Blade Height Changes - Rubber Expansion
2. Blade Thickness Varies - Side Pressure and Height Makes Tapered Blades
3. Blade Spacing - Unequal Pressure From Unequal Rubber Volume

FIGURE 66. SOLID BLADE STIFFENED PANEL MADE WITH SOLID RUBBER MANDRELS

Results of Panel Fabrication

This fabrication process produced a panel free of voids but of unacceptable thickness and dimensional quality. The thickness of the blades became thinner from base to outer edge as shown in Figure 66.

The skin and blade all had low void content. This indicated the curing process was proper.

The resin became very thin and easy to flow during the early part of the curing cycle. The rubber mandrels expanded, and the pressure on the soft upper edges of the blades allowed the resin to be squeezed out, and the net result was the low resin content thin edge blade. The thermal expansion of the silicone rubber caused it to expand in thickness (height) where it was restrained only by the 100 psi pressure of the autoclave bag. This resulted in an increase in the blade height. Finally, the rubber mandrels, being of unequal volume, caused unequal pressure that resulted in out-of-tolerance blade spacing dimensions.

4.4 Flat Aluminum Plate and Solid Aluminum Blocks with Cast Constant Thickness Silicone Rubber Mandrels and a Support Frame

The tooling supplied for the fourth fabrication concept for the blade stiffened panel consists of (see Figure 67):

- (A) 3/4 inch aluminum plate for outer skin (same as Section 4.1).
- (B) Solid aluminum blocks with cast uniform thickness (1/2 inch) silicone rubber facings for the blade walls.
- (C) A metal outer retainer frame to locate and support the mandrels.
- (D) Aluminum caps for a bridge over the edge of the blade sections and between the mandrels.

The same general fabrication process was used as in Section 4.1. The tooling change was the use of solid aluminum blocks with cast 1/2 inch thickness silicone rubber facings in place of the cast solid silicone rubber. (See Figure 67.) Note that the equal thickness silicone rubber expanded in a more uniform manner than the unequal size 100% solid silicone mandrels to form the side pressure and compact the blade walls during cure. A wooden mock-up part was fabricated for use in making the silicone rubber-covered aluminum mandrels. The aluminum blocks were cut to rough size about 1/2 inch smaller than the required size of the molded sections. The wood mock-up and the aluminum blocks were supported on the metal plate tool and inside the surrounding holding frame. Dapco #38-3 A/B silicone rubber from "D" Aircraft Company was mixed, degassed under vacuum, and poured to fill the gap between the mock-up part and the aluminum blocks. (See Figure 67.) The casting was allowed to cure at room temperature overnight and then heated to 120°F for four hours. The castings and aluminum blocks were then removed from the mold and post cured to 350°F for eight hours. Mold release was applied to the silicone mandrels and baked in place for one hour at 350°F.

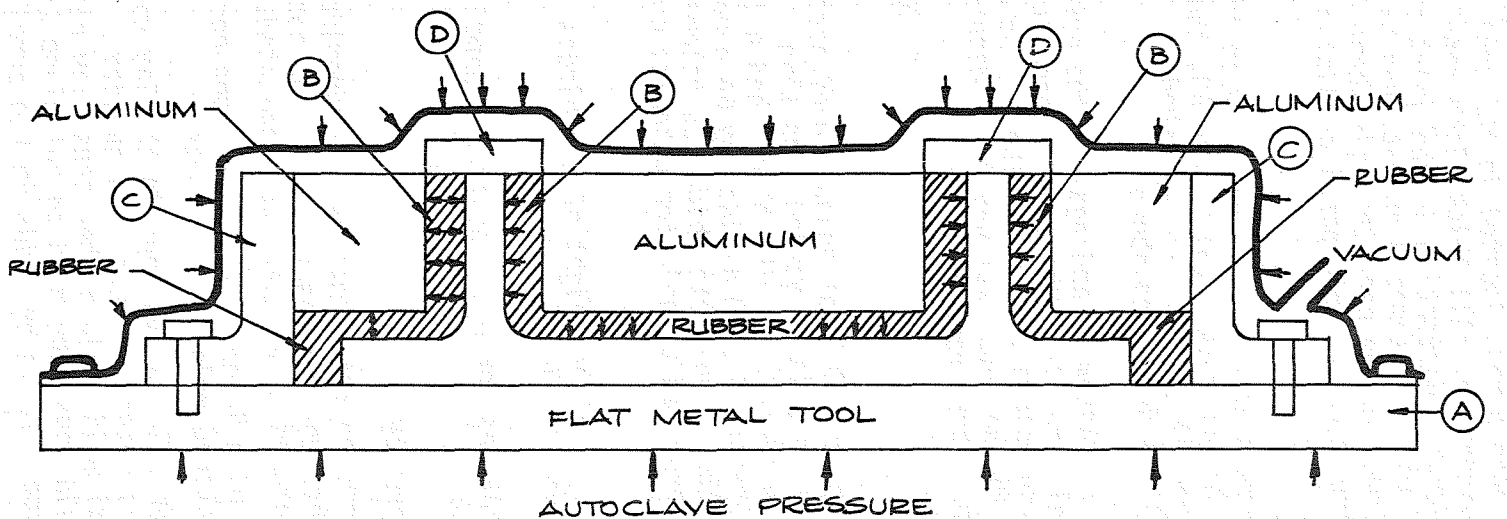

Good Quality Parts and Blade Location

Considerations

1. Height and Thickness Blade Not Precise
2. Requires Dummy Part - To Cast Rubber Tool
3. Allows Contoured Part Tooling By Cast Process
4. Rubber Tooling Accepts Overlaps In Layup
5. Rubber Tooling Cast For Steps In Part Thickness

Potential Fabrication

Low Cost Cast Tooling
For Parts With Contour
For Parts With Step Skin Or Blade Thickness

FIGURE 67. SOLID BLADE STIFFENED PANEL MADE WITH SILICONE RUBBER COVERED ALUMINUM BLOCKS

A separate filler tool was made to form the filler inserts that were at the base of the stiffener blades. (See Figure 68.) A 1 1/2 inch wide band of unidirectional graphite tape was rolled into a rod, located in the tool and pressed to the desired shape at room temperature. All thick blade panels fabricated prior to this date had considerable distortion in the joint area of the skin and blade. The filler material was an estimated amount, was hand rolled into a round rod shape and was formed to the near triangle shape during the processing cycle. Figure 69 shows the typical cured panel condition of the material at the skin to blade joint.

The blade layup and densification cycles were accomplished directly on the silicone rubber surface. The lay up of the outer skin (5) Figure 63, the blade skin and reinforcement (1), (2), and (3) were all accomplished as described in Section 4.1. The filler (4) was described above.

A metal retainer frame was placed around the assembly and against the outer walls of the silicone rubber-covered metal mandrels. The entire assembly was placed in a vacuum bag and located in an autoclave for cure. The curing cycle was the same as Section 4.3, except that the heat-up rate was 0.6°F/minute and 100 psi pressure was applied when the temperature reached 245°F.

Results of Panel Fabrication

This fabrication process produced several panels free of voids and of acceptable dimensional quality. The thickness of the blades varied less than .020 inch from top to bottom and one end to the other. The blades had a total of 64 plies of material which means a tolerance of .020 divided by 64 equals to .0003 inch per ply. This thickness is the approximate thickness tolerance that the prepreg material supplier can be expected to hold for material cured in ideal autoclave curing cycle conditions.

The thermal expansion of the rubber cover caused the height of the blades to be slightly higher than the surrounding aluminum blocks.

This fabrication concept offered some advantages for blade stiffener panel fabrication over all other methods evaluated.

a. The parts produced were of good quality.

b. Matched mold quality parts were made on tools made by an economical casting process. Even though a mock-up part was required, the costs of close tolerance machining of matched metal dies was eliminated.

c. Parts with some contour and parts with internal step build-ups could be fabricated without excessive matched mold tooling costs.

d. The softness of the silicone rubber allowed overlaps in the lay up to occur in random locations and still obtain matched mold quality parts. Overlaps in a matched metal mold would either cause low resin content in the overlap area or would cause the mold to not close and thinner areas would have either excess resin or voids in the cured panel.

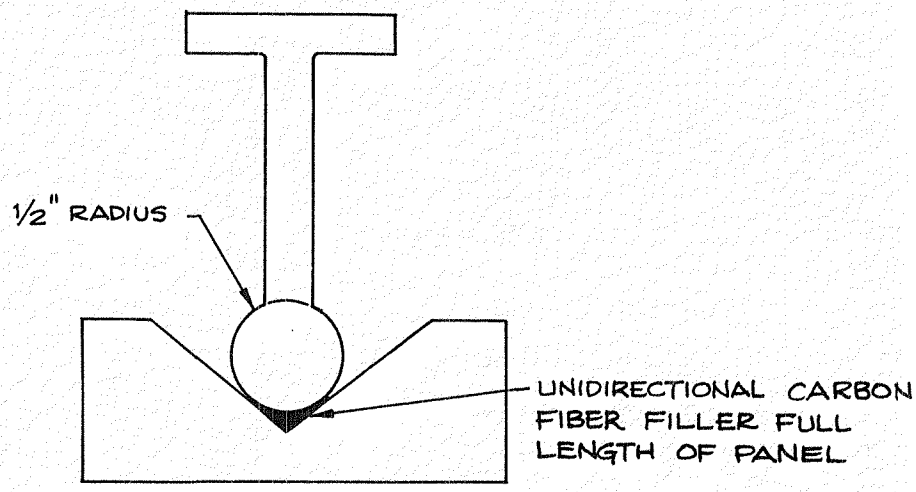

FIGURE 68. FILLER TOOL

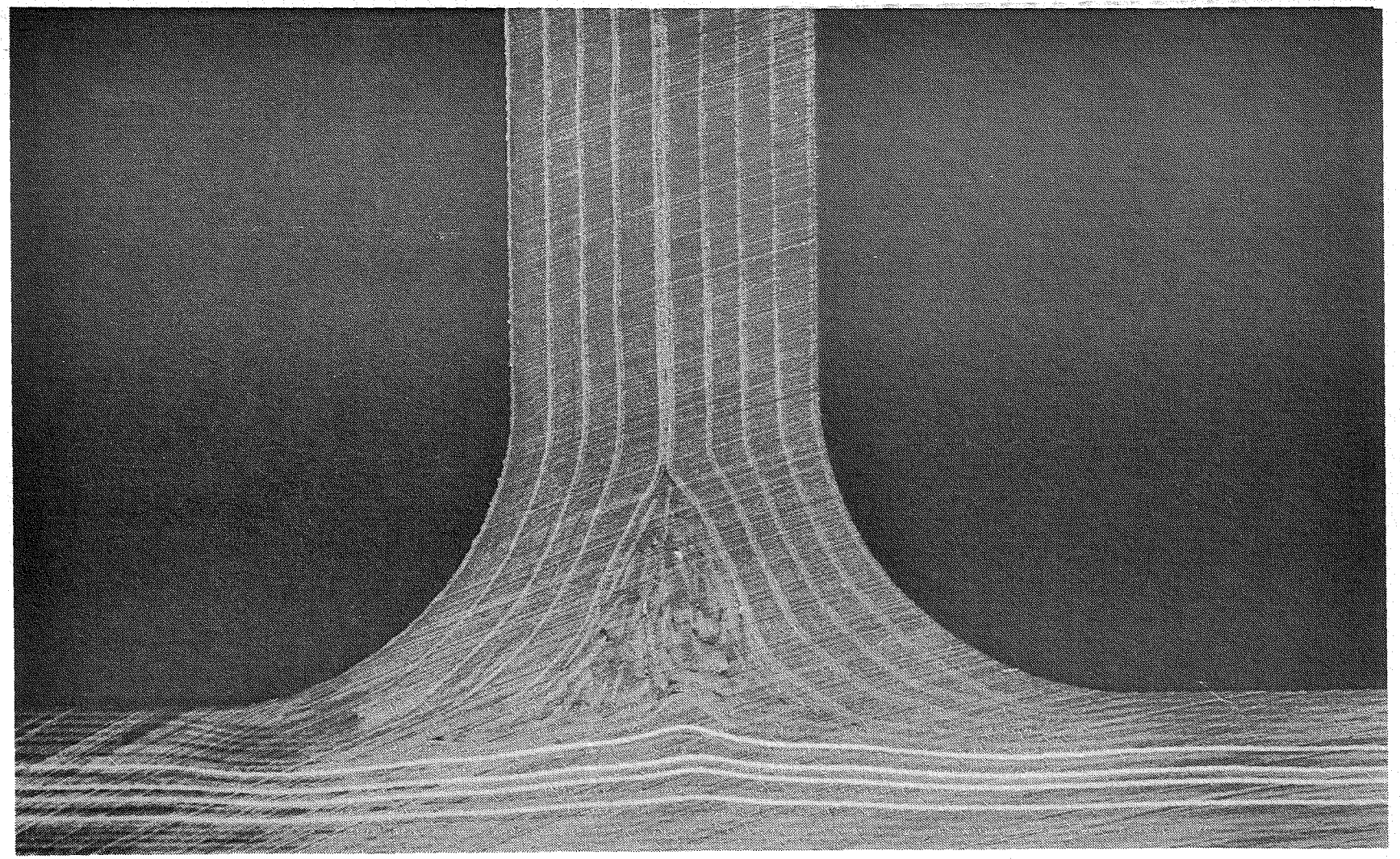

FIGURE 69. SKIN TO BLADE JOINT

4.5 Flat Aluminum Plate and Solid Aluminum Mandrels with Side Silicone Rubber Pressure Appliers and a Support Frame

The tooling supplied for the fifth fabrication concept for the blade stiffened panel consists of (see Figure 70):

- (A) 3/4-inch aluminum plate for outer skin (same as Section 4.1).
- (B) Solid aluminum blocks for the blade walls.
- (C) Cast silicone rubber side pressure bars.
- (D) A metal outer retainer frame to locate and support the mandrels.
- (E) Aluminum caps for a bridge over the edge of the blade sections between the mandrels.

Aluminum filler tool (Figure 68).

The same general fabrication process was used as in Section 4.4. The tooling change from Section 4.4 was the use of solid aluminum block mandrels in place of the aluminum blocks with cast silicone rubber facings. Note the silicone rubber side pressure bars that expand when heated during the panel curing cycle to produce the necessary side compaction pressure on the blades.

The aluminum mandrels were machined from solid thick aluminum stock. The silicone rubber side pressure bars were cast to size from Dapco #38-3 material and cured by the procedure described in Section 4.4.

The blade layup and densification cycles were accomplished directly on the solid aluminum mandrels. The layup of the outer skin (5) (see Figure 63), the blade skin and reinforcement (1), (2), and (3) and the filler details (4) were all accomplished as described in Section 4.1.

The metal retainer frame was placed around the assembly, and the silicone rubber pressure bars were placed between the edge aluminum mandrels and the retainer frame. The entire assembly was placed in a vacuum bag and located in an autoclave for cure. The cure cycle was the same as that described in Section 4.4, except that the heat-up rate was 0.7°F/minute and the 100 psi pressure was applied, without dwell, when the temperature reached 250°F.

Several steps of the fabrication process for blade stiffened panels are shown in the following figures. Figure 71 shows a densified outer skin being placed on the tool plate with the surrounding pressure restrainer frame. Figure 72 shows the skin in place, all densified blades in place, and four of the solid aluminum mandrels in place. The three remaining mandrels were removed to allow the photograph to be taken (densification of the details allowed this to happen). A silicone rubber pressure mandrel is visible on the right edge of the tool. The silicone pressure mandrel and the left pressure retainer frame still require placement on the left side of the tool. Figure 73 shows a completed panel, with ends potted in epoxy casting material and machined flat and parallel for a compression test.

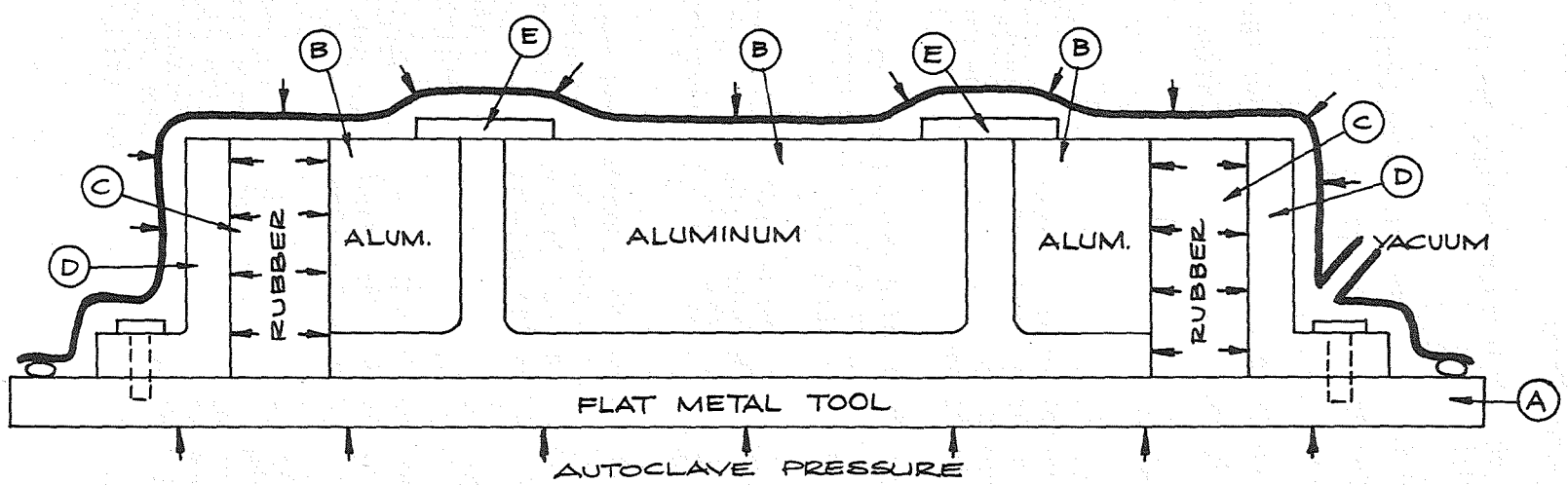

Good Quality Parts
Good Blade Location - Height - Thickness

Considerations

1. Requires Machining Accurate Tool Dimensions
2. Does Not Require Dummy Part To Cast Rubber
3. Requires Maximum Detail Densification
4. Process Works Up To 6 Blade Panel

Potential
Best For Flat Panels

FIGURE 70. SOLID BLADE STIFFENED PANEL WITH SOLID ALUMINUM MANDREL AND RUBBER SIDE PRESSURE BARS

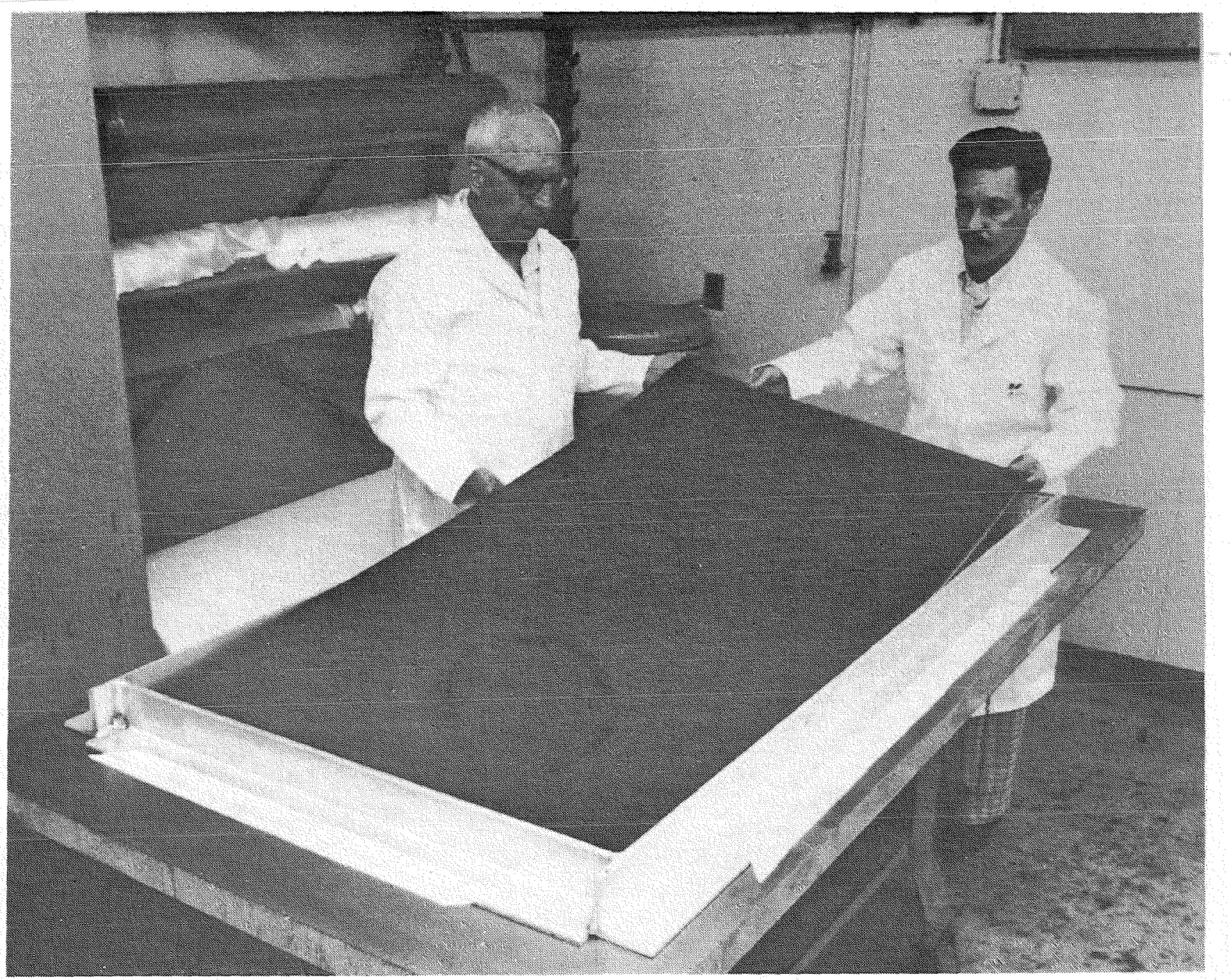

FIGURE 71. PLACEMENT OF DENSIFIED SKIN ON TOOL PLATE

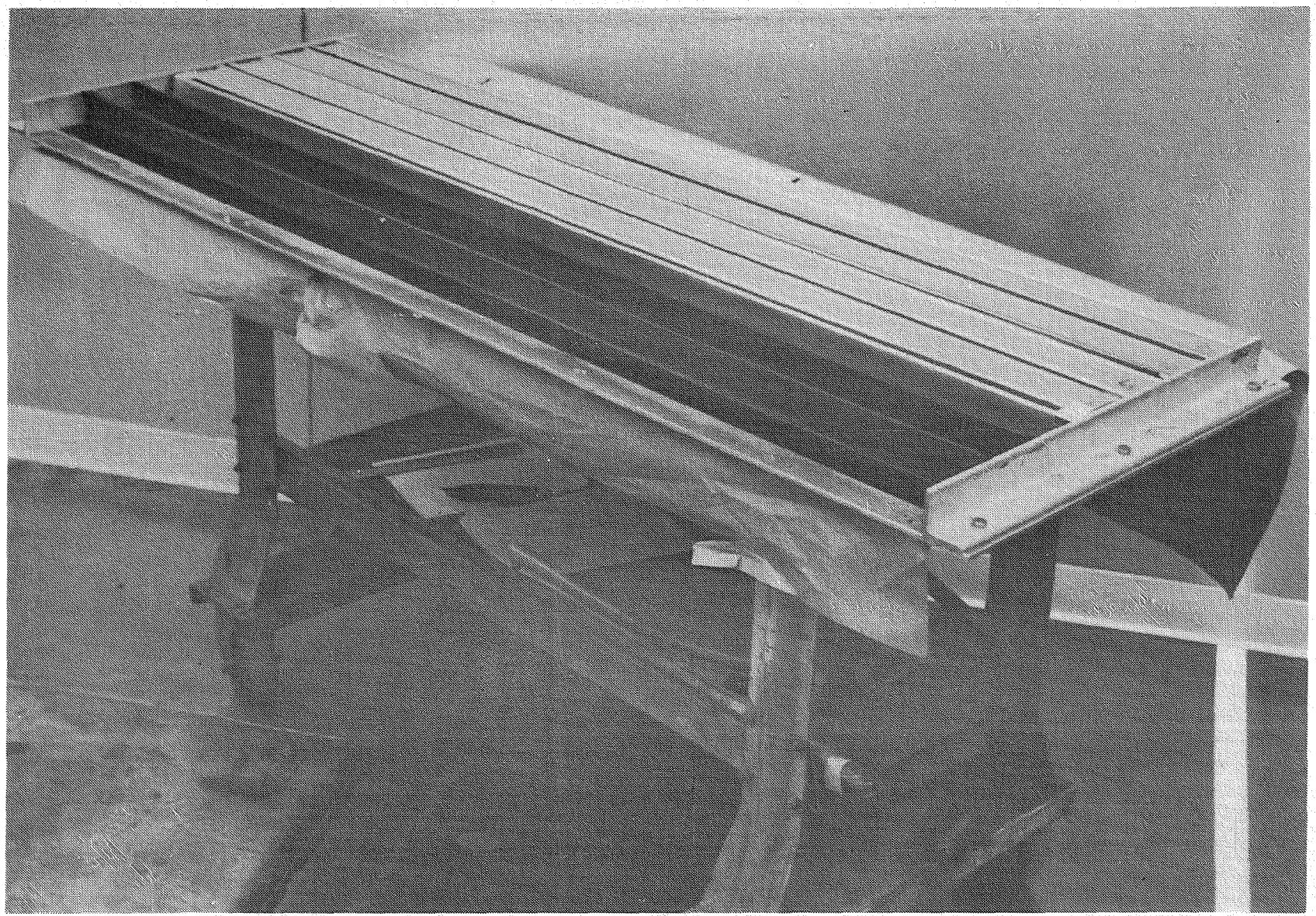

FIGURE 72. PARTIALLY COMPLETED BLADE STIFFENED PANEL

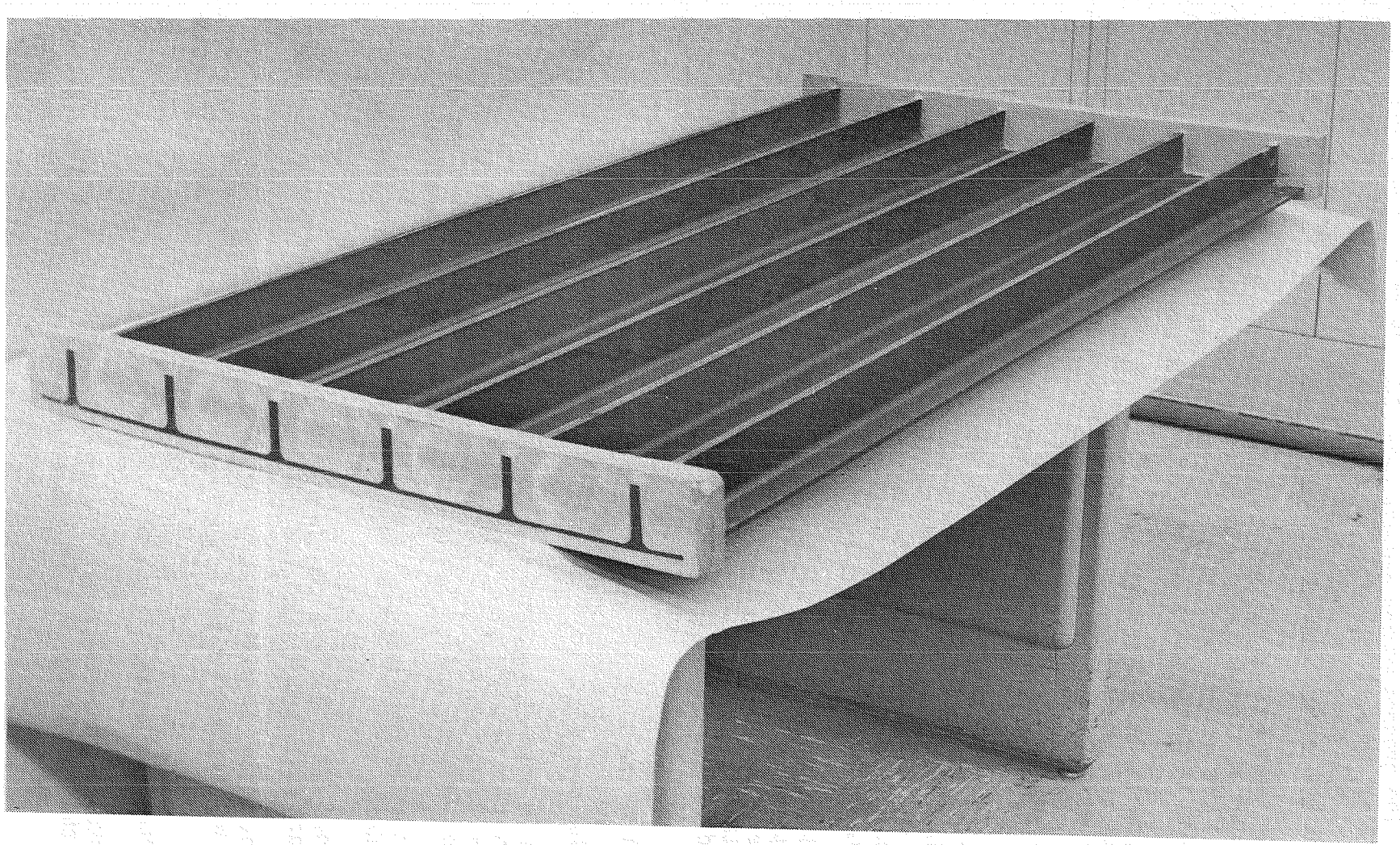

FIGURE 73. COMPLETED BLADE STIFFENED PANEL READY FOR COMPRESSION TEST

Results of Panel Fabrication

This fabrication process produced several panels that all had the best combinations of quality, free of voids, uniform blade height, thickness and location. The process worked equally well from a narrow panel with a single blade stiffener to a 30-inch wide, 60-inch long panel with six blade stiffeners. This suggests that additional width and number of blades could be produced in such a panel design and fabrication method.

This process seemed to be the optimum fabrication process developed to date for flat blade stiffened panels. It does have the requirement that edges of all lay-up plies must be butt jointed. The tool would not function properly if nonuniform thickness skins were made by random overlap of skin layers.

Contoured panels, or panels with variations in skin thickness would suggest a tooling cost analysis between Section 4.4 and 4.5 procedures to determine the better process for a particular panel or panel size.

4.6 Flat Blade Stiffened Panel With Molded-in-Place Ribs

One unique six blade stiffened panel was fabricated with two rows of cross direction ribs integrally molded in place. The tooling was similar to that described in Section 4.4 in that individual aluminum blocks were machined and 1/2-inch silicone rubber was cast on the inner skin, side blade, and end cross rib surfaces. A dummy part was made of wood, the aluminum blocks were placed in position, and all of the Dapco #38-3 silicone rubber was poured at once.

Figure 74 shows the tool with the retaining pressure frame and several of the individual pressure mandrels that fit between adjacent blades and ribs. Note the silicone rubber cast around the aluminum bars. The first two rows of blades and the first row of cross ribs are in position. The pressure mandrels were removed to take the photograph. A densified cross rib, with flanges that bond to the lower skin and both blades, is shown in the upper corner.

Figure 75 shows the long continuous blade section being hand formed to the tool. Note the use of a heat gun to soften the densified material and assist in the forming operation.

Figure 76 shows several mandrels in position. The panel skin, first blade, and a half section of a rib are clearly visible. The first half of the second blade will be folded against the exposed side of the second row of mandrels after the next mandrel section is placed in position in the foreground.

Figure 77 shows the two flanges of the cross rib folded against the two pressure mandrels.

Figure 78 shows all blades and ribs in place, and all mandrels are in place except the last full-length side pressure blade mandrel.

After this operation, an overall metal pressure plate was located in position, a vacuum bag was sealed over the assembly and the panel was cured in the autoclave.

Results of Panel Fabrication

Figure 79 shows the completed panel. It was of overall acceptable quality and demonstrated the feasibility of this concept of wing skin design and manufacturing.

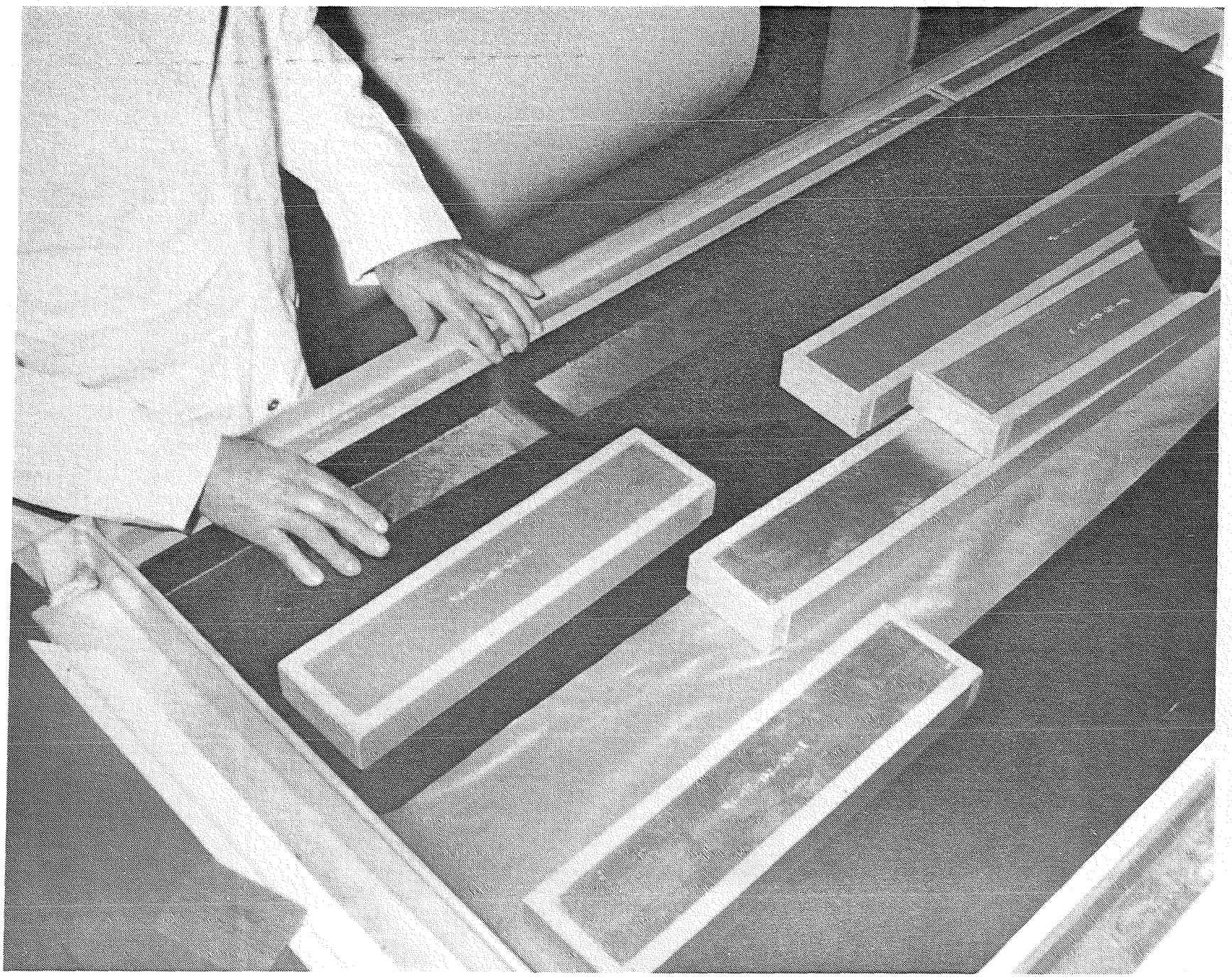

FIGURE 74. START OF BLADE FABRICATION FOR A RIB STIFFENED PANEL

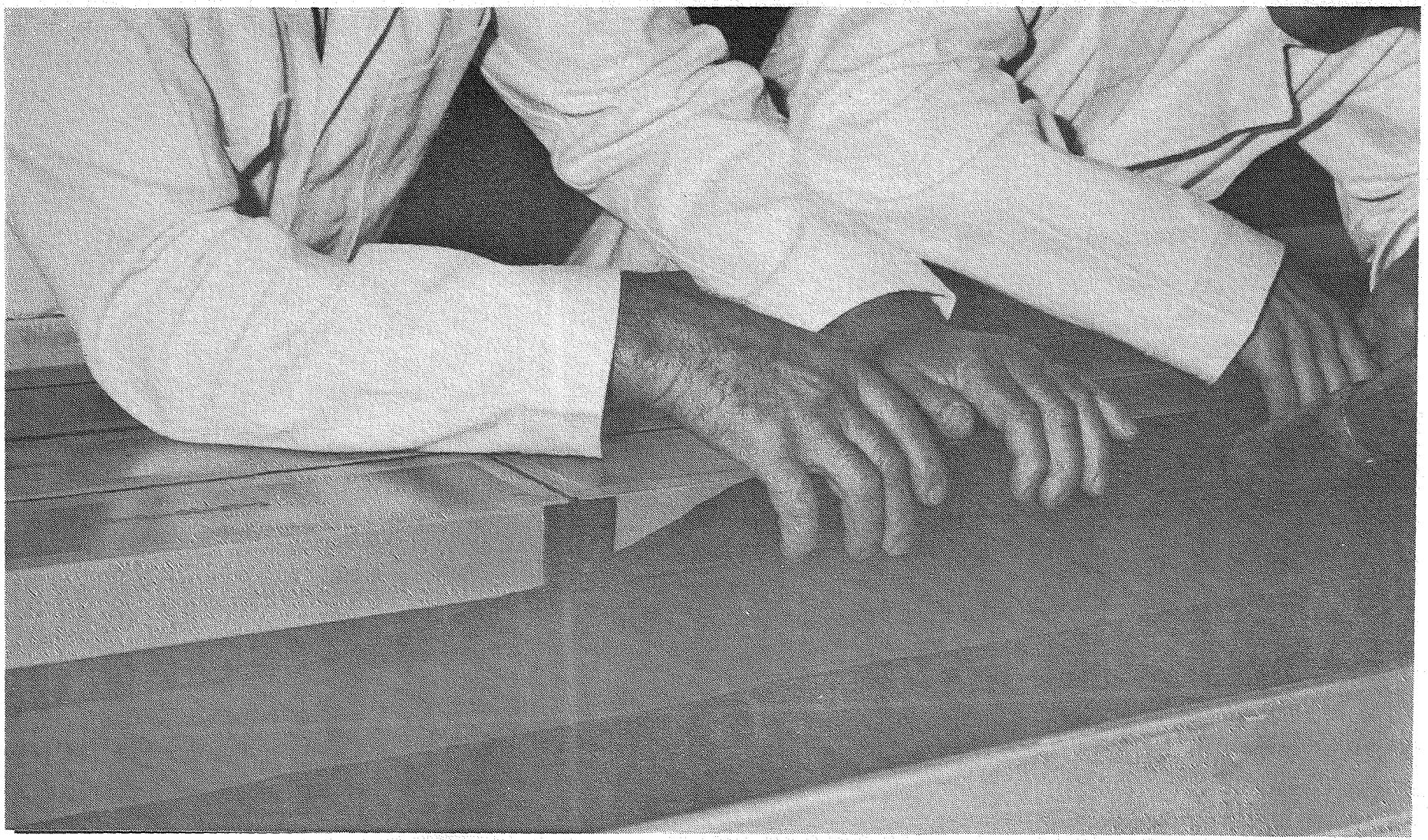

FIGURE 75. FORMING A BLADE STIFFENER ONTO THE TOOL

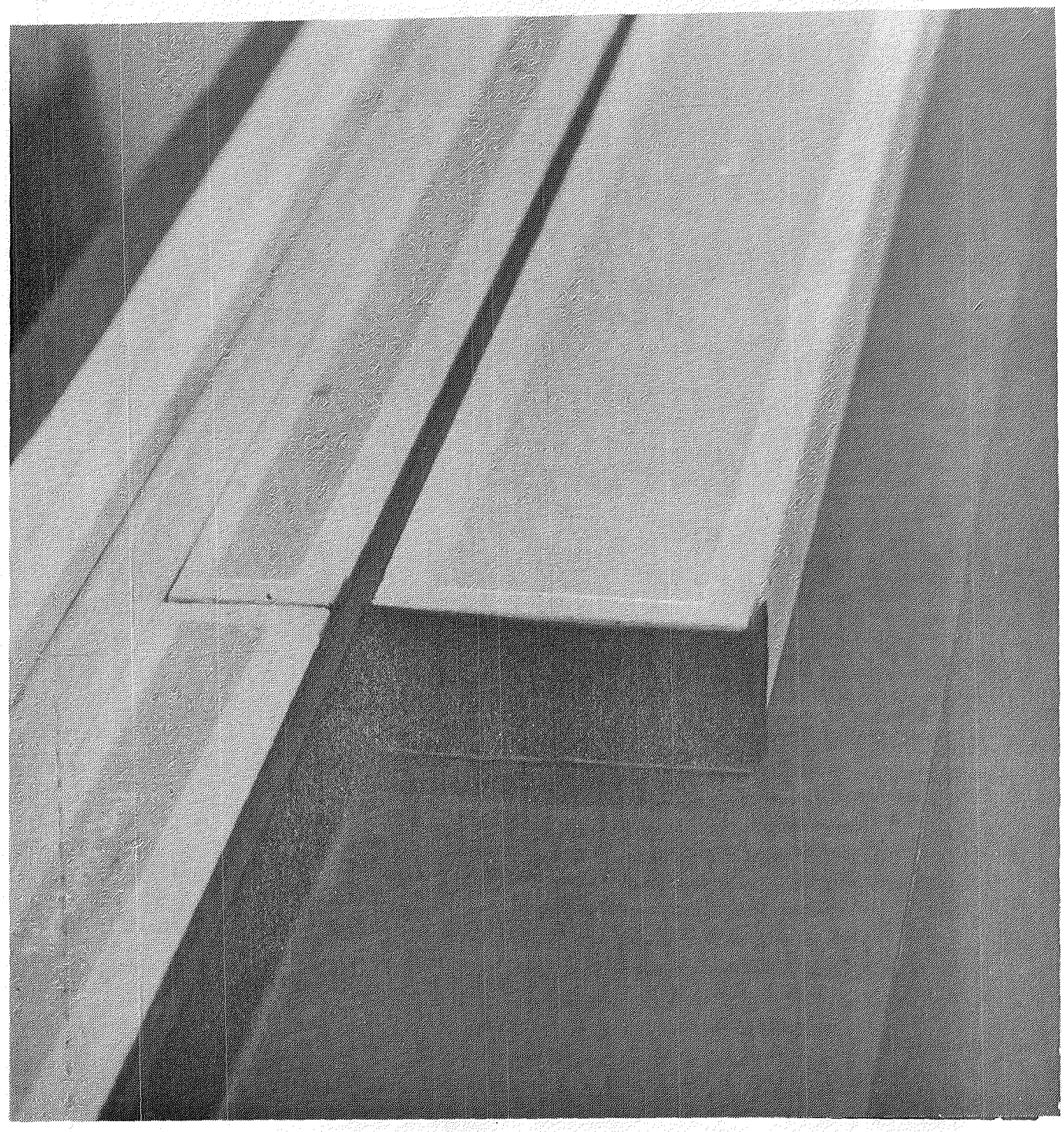

FIGURE 76. BLADE AND RIB IN POSITION

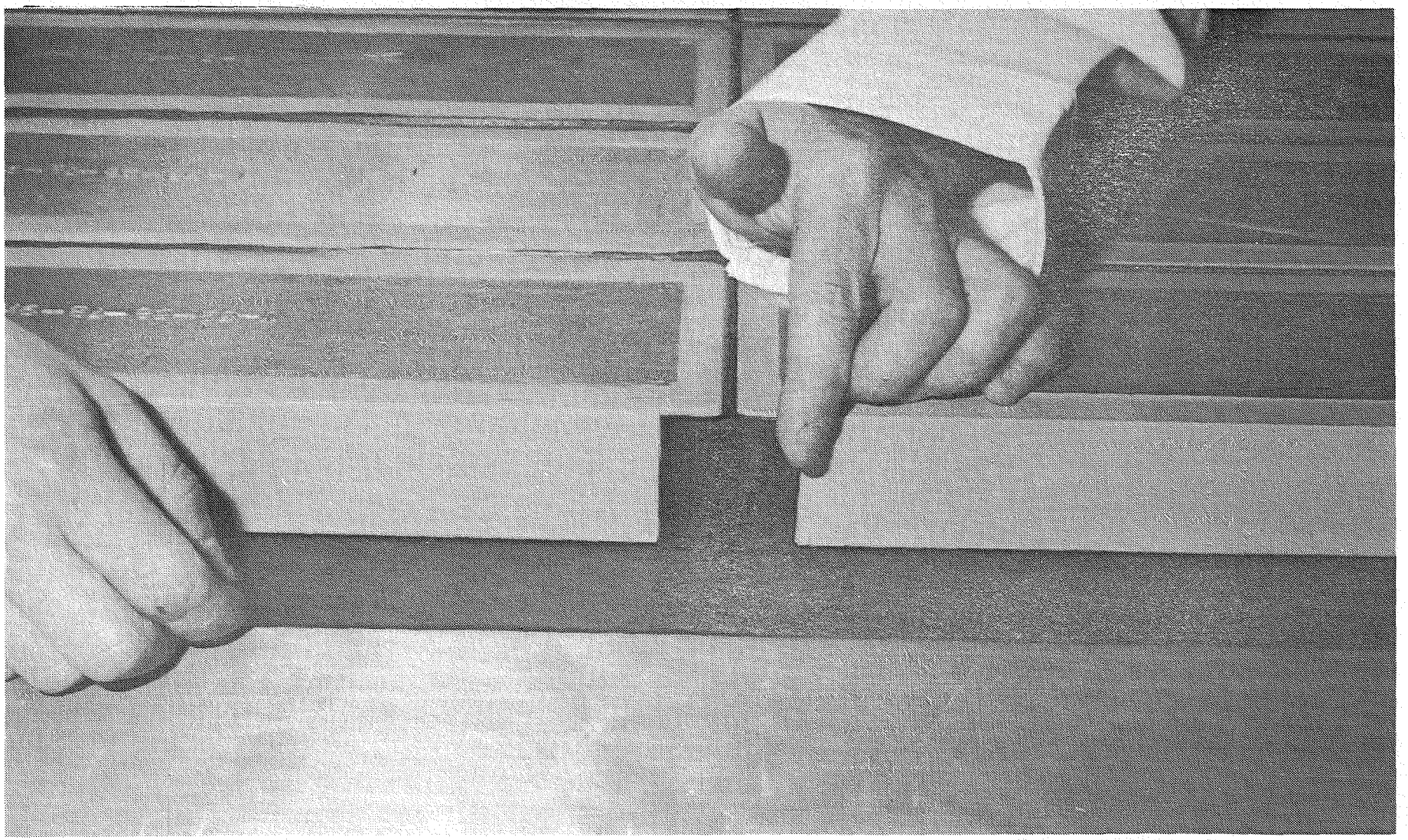

FIGURE 77. FLANGES OF A CROSS RIB

FIGURE 78. SOLID BLADE/CROSS RIB STIFFENED PANEL WITH TOOLING PRESSURE MANDRELS ALL IN POSITION

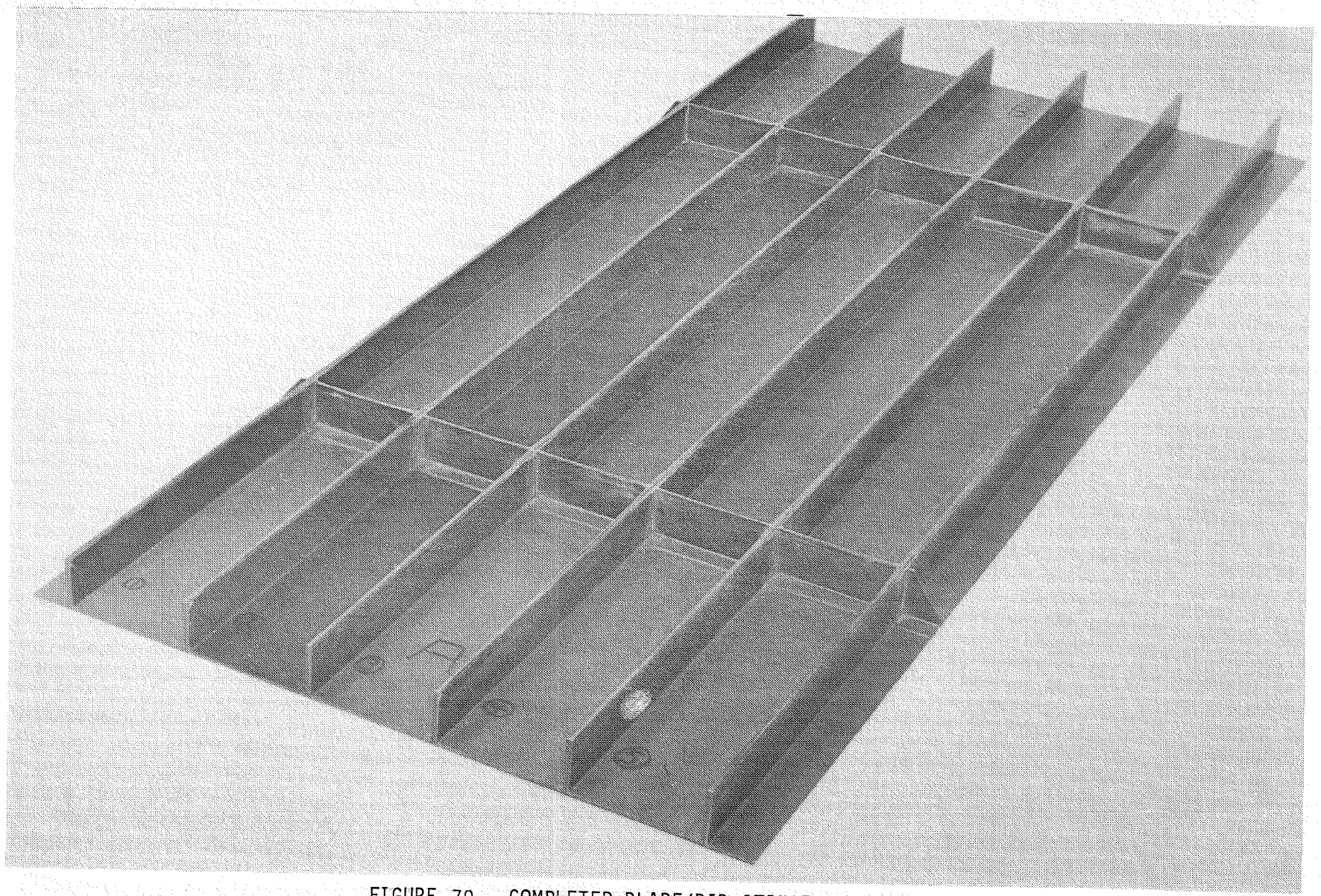

FIGURE 79. COMPLETED BLADE/RIB STIFFENED PANEL

TASK 5. HONEYCOMB BLADE STIFFENER

The honeycomb blade stiffened panels were all designed for wing skin-like heavy loads. The unique characteristic of these panels included thick doubler buildup reinforcements under the blade (on the outer skin) and upper blade caps that were made of solid graphite laminate the full thickness of the honeycomb. The general construction of the blade stiffened panels is shown in Figure 80.

5.1 Aluminum Block Tooling

The tooling supplied for fabrication of the first honeycomb blade stiffened panel consisted of (see Figure 81):

- (A) 3/4-inch aluminum plate for outer skin surface.
- (B) Aluminum 90° mandrels with tapered outer surface for support of the blade walls during cure.
- (C) Aluminum caps for a bridge between the aluminum blocks.

The aluminum blade block tooling was machined at an angle on the bag surface opposite the contact with the blade. (See Figure 81.) The objective was to have the resultant force cause the block tools to slide when the vacuum and autoclave pressure was applied and compact the blade and skin in a uniform manner.

Previous work (reference Section 4.1) on solid blade angle tool fabrication, had shown that a simple aluminum angle tool would not slide and that poor uncompacted blade quality would result. Additional previous work (reference Section 4.3), on solid silicone rubber tool blade fabrication, had shown that nonuniform side pressure from the silicone rubber would cause thin upper blade thickness dimensions. Thus, the tapered solid aluminum block tool was used for this panel.

The outer skin (1) in Figure 80, was layed up as a 32-ply 0° ± 45°, 90° pattern per the Engineering drawing. The skin was placed under a vacuum bag and densified under full vacuum for 10 minutes at 250°F and cooled under pressure to room temperature. Syntactic foam (3) was placed in aluminum honeycomb (2) and cured, and then the honeycomb was cut to size with the upper and lower edges stabilized with the foam (3). The upper caps (4) were layed up as 80-ply 0° panels and densified at 250°F under vacuum bag pressure, The caps were cut to size and cocured and bonded with the single curing cycle for the first panel. These caps were porous and of poor quality. All remaining caps were made by curing the 80-ply panel in the autoclave and then triming the cap reinforcement (4) to size. These trimmed caps were secondarily bonded to the edge of the syntactic foam reinforced honeycomb. The lower doublers (7) were layed up as all 0° fiber pattern per the Engineering drawing with tapered edges and densified at 250°F for 10 minutes under vacuum pressure. The lower

doublers (7) were located into position on the densified outer skin (1). The inner skins for the honeycomb-sandwich blades (5) and (6) were layed up as ± 45° fiber pattern flat skins and densified. The (5) inner skin was cut to size and bent to a 90° angle on a form block. The (6) inner skin was cut to size and bent to a channel with 90° flanges on another form block. The densified condition of the material allowed the details to retain their new formed shape at room temperature. The (5) formed inner skin was placed on the outer skin, and the (8) tool block was placed over the (5) skin. A layer of FM-300 adhesive film was placed on each bonding side of the reinforced honeycomb (2) and cap (4) details. This honeycomb subassembly was then placed over the lower doubler (7) and against the outer skin (5) of the blade. The formed inner skin channel (6) was placed against the honeycomb detail (3) and the outer surface skin (1) and continued to form the inner (6) side honeycomb skin for the second blade. The (9) tooling block was located in place over the (6) skin and against the honeycomb blade. The second honeycomb blade was assembled in an identical manner. Aluminum upper pressure plates (10) were located over the edges of the (8) and (9) tooling blocks. This entire assembly was covered with a layer of Armalon separator cloth, eight layers of Mochburg bleeder paper, and placed under a vacuum bag. (See Figure 81.) The panel was cured in an autoclave using a standard cure cycle for the Narmco 5208/T-300 material.

Results of Panel Fabrication

This fabrication procedure produced a poor quality panel. The location of the blades relative to each other was not accurate. The quality of the skin under the blades was unsatisfactory. The tapered blade tools did not slide properly, and the quality of the skin over the honeycomb showed areas that had little pressure during cure. The quality of the blade upper doubler cap was good only on the caps that had been precured and were secondarily bonded in place.

5.2 Aluminum with Cast Silicone Rubber Surface Tooling

The tooling supplied for fabrication of the next series of honeycomb blade stiffened panels consisted of:

- (A) 3/4-inch aluminum plate for outer skin surface.
- (B) Aluminum blocks with an approximate 1/2-inch covering of silicone rubber on tooling surfaces (similar to Section 4.4).
- (C) Aluminum caps for a bridge between the aluminum blocks.

The blade side of the tooling was fabricated from aluminum blocks (1) with a cast silicone surface (2). (See Figure 82.) A wooden mock-up part was made, and the aluminum blocks (1) were cut about 1/2 inch under size for the space between the block and blade skin surfaces. These blocks were supported in a frame, along with the wooden mockup, and the areas between these details were cast with silicone rubber (2). (See Figure 82.) The surfaces were prepared to bond the silicone to the aluminum blocks and to release from the wooden mockup.

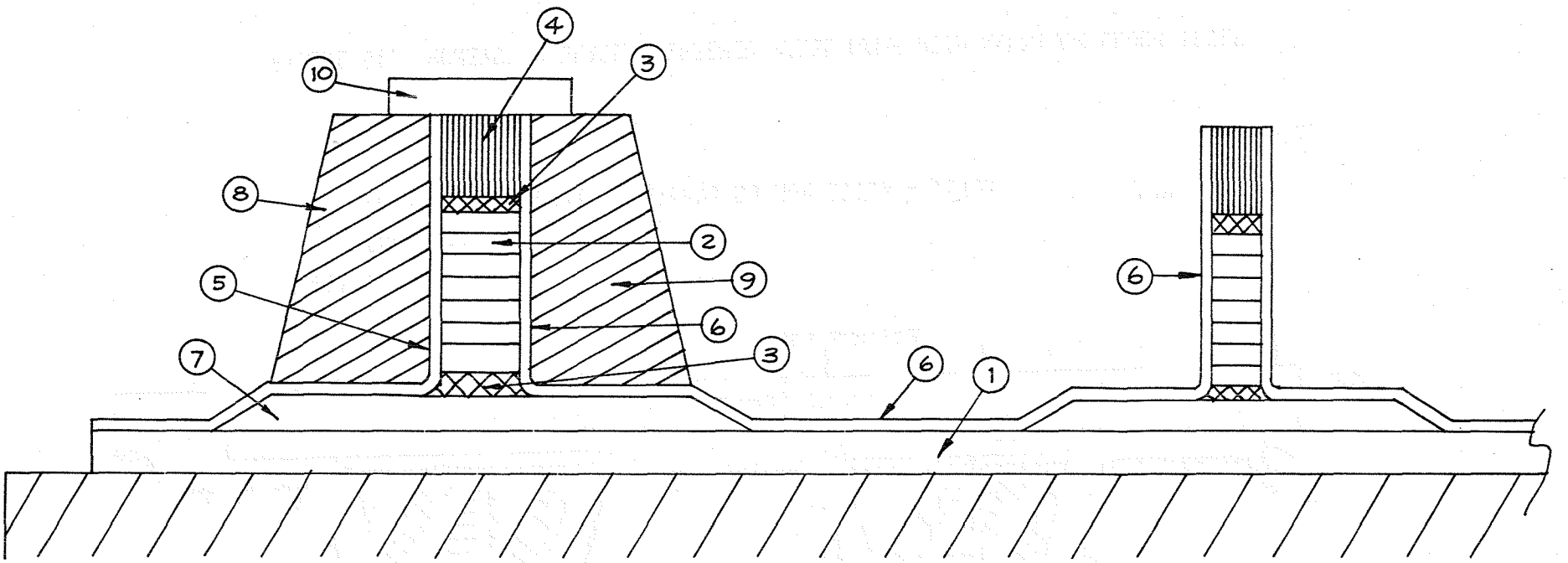

1. Outer Skin [0 ±45, 90]
2. Honeycomb 1/8 Hex 5052-8.0
3. Syntatic Foam Filler
4. Solid Graphite Cap - 0°
5. Inner Skin (±45°)
6. Inner Skin (±45°)
7. Lower Doubler - 0°
8. Left Tool Block - Aluminum
9. Right Tool Block - Aluminum
10. Tool Blade Cap Plate

FIGURE 80. HONEYCOMB BLADE DESIGN CONCEPT

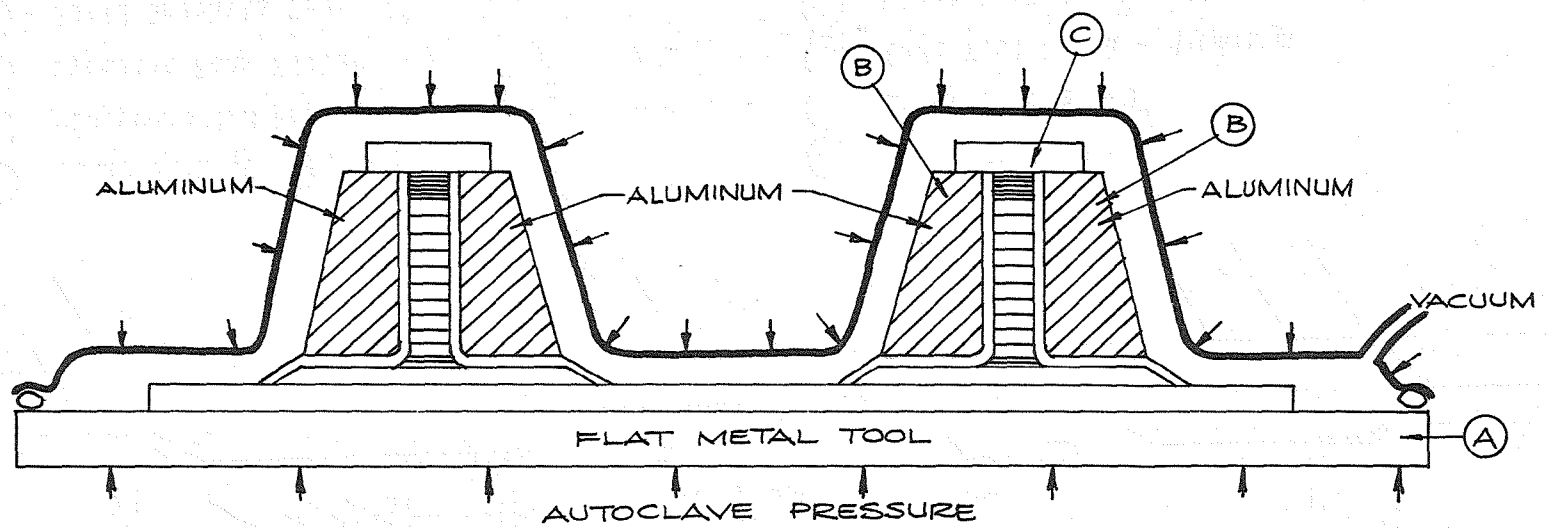

PROBLEMS

1. Poor Location
2. Poor Blade Quality - Blocks Do Not Slide - Voids

FIGURE 81. HONEYCOMB BLADE STIFFENED PANEL MADE WITH ALUMINUM BLOCK TOOLS

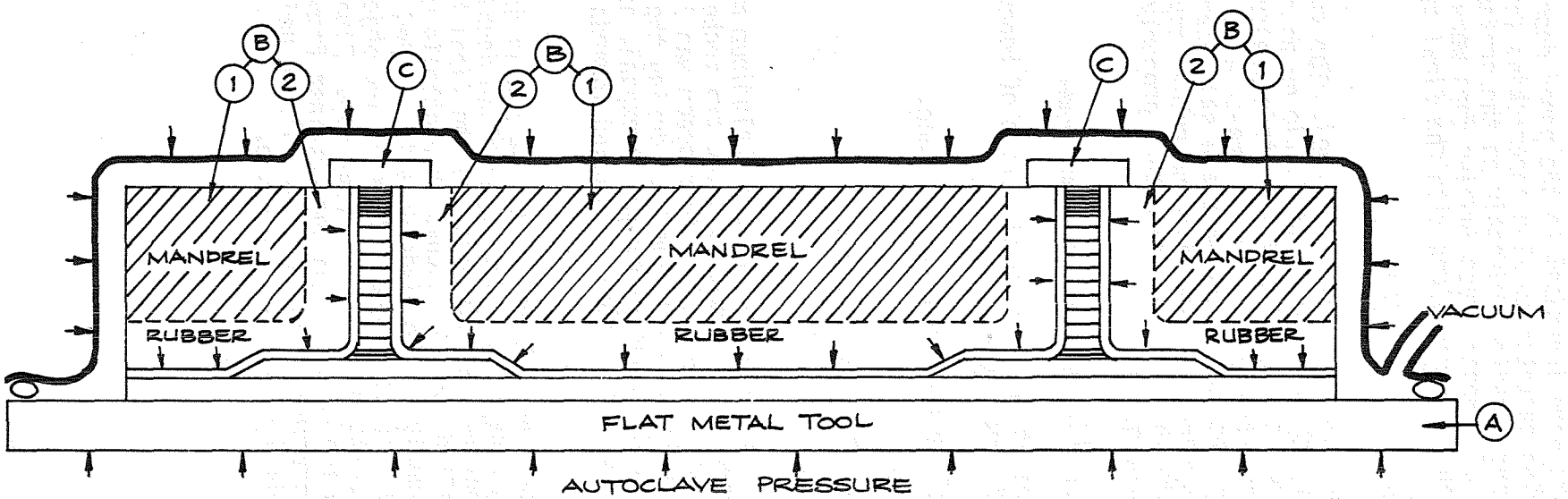

PROBLEMS

1. Poor Blade Quality
   Aluminum - Would Not Slide For Compaction
   Rubber - Distorted Caps - Poor Location
   Aluminum/Rubber - Distorted Caps

FIGURE 82. HONEYCOMB BLADE STIFFENED PANEL MADE WITH RUBBER COVERED ALUMINUM BLOCKS

The details of layup and cure were identical to the panel described in Section 6.1 with the following exceptions. The inner skins for the blade side of the panel were layed up and densified directly on the surface of the silicone surfaced mandrels. The upper blade doubler caps were assembled in densified "B" stage condition and cured along with the final curing cycle.

Results of Panel Fabrication

This fabrication process produced a poor quality panel. The overall quality of the blades was nonuniform and showed areas of little or no pressure during cure. The rubber expansion was not sufficient to obtain pressure. The mandrels did not slide sideways from the autoclave pressure to obtain the necessary compaction. On one end the honeycomb blade stiffeners where the tooling did slide to obtain compaction, the silicone rubber expanded and distorted the thick rubber caps before they could cure properly. The outer skin between blades was of good quality.

5.3 Solid Aluminum With Trapped Rubber and Retainer Frame

The tooling supplied for fabrication of the last series of honeycomb blade stiffened panels consisted of (see Figure 83):

- (A) 3/4-inch aluminum plate for outer skin surface.
- (B) Solid aluminum blocks.
- (C) Silicone rubber side pressure mandrels.
- (D) Metal retainer frame.

The blade side of the tooling was fabricated of solid aluminum mandrels (1) and (2). A metal retainer frame (3) was made to allow two inches of space on each side of the assembled tools and part (4). This space was filled and cast as solid silicone rubber. (See Figure 83.) The heat during the curing process in the autoclave caused the silicone rubber to expand, and the retainer frame then forced the silicone rubber to expand inwards to obtain the desired compaction.

The details of the layup and cure were identical to the panels described in Section 5.2 with the following exceptions: The upper blade doubler caps were precured and bonded to the honeycomb details prior to the final bonding cycle. A portion of the densified inner honeycomb skin details were fabricated oversize and, during assembly of the blade details, folded over the top edge of the precured upper caps. (See Figure 83 Note.) The objective, which was achieved, was to obtain a better bond to the upper cap. Finally, the silicone rubber blocks between the mandrels and the retainer frame were used to obtain the side compaction pressure. The panel was placed under a nylon vacuum bag and cured by a standard autoclave cure cycle.

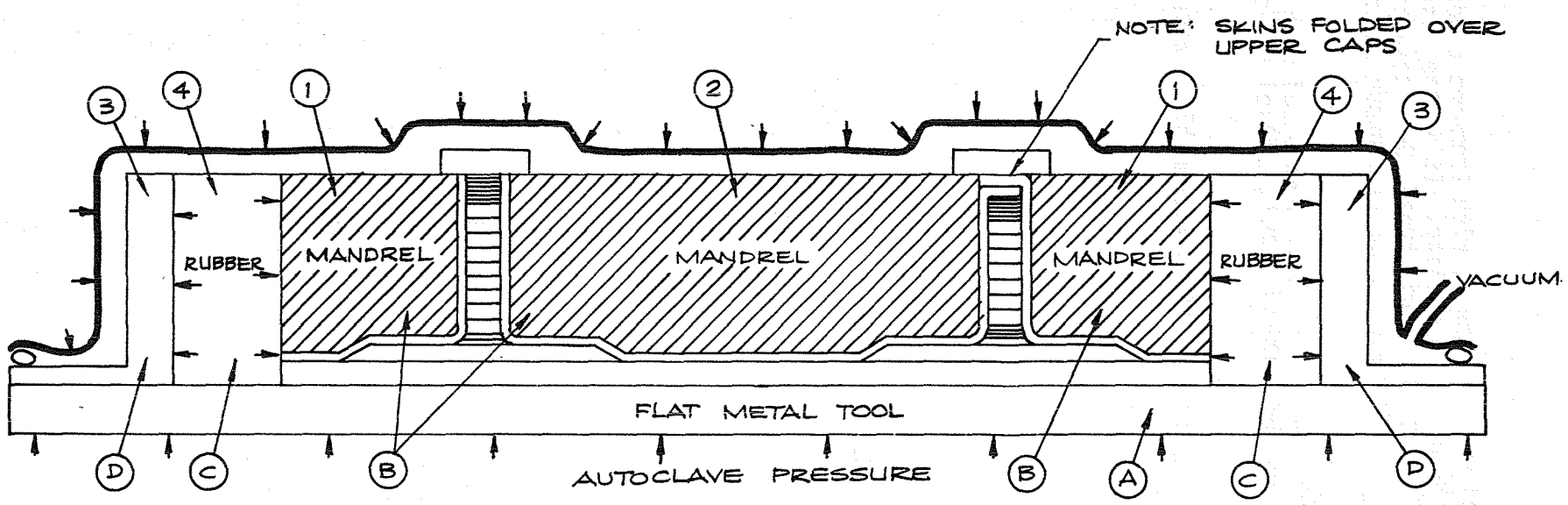

Good Quality

FIGURE 83. HONEYCOMB BLADE STIFFENED PANEL MADE WITH ALUMINUM MANDRELS AND TRAPPED RUBBER FOR SIDE PRESSURE

Results of Panel Fabrication

This fabrication process produced several panels, with from one blade to six blade stiffeners, that all had very high quality. It is the best process tested todate to make high quality panels of this type. See "Results of Panel Fabrication" in Section 4.5 for added comments on panel contour and material ply thickness pertinent to this section.

Figure 84 shows a completed two-honeycomb-blade stiffened panel with ends potted in epoxy casting material and machined flat and parallel for a compression test.

Figure 85 shows an end view of the detail of the honeycomb blade stiffened panel.

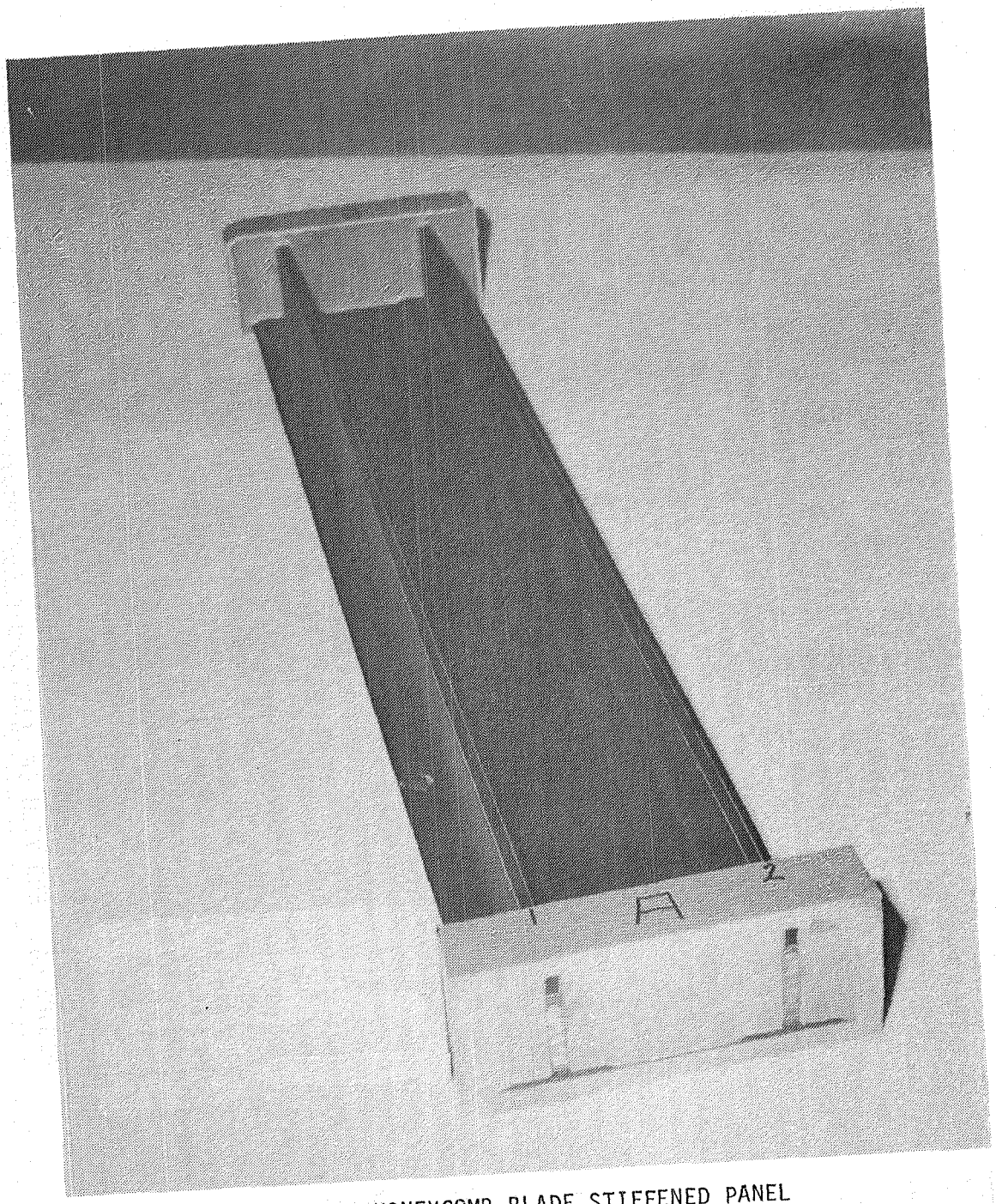

FIGURE 84. HONEYCOMB BLADE STIFFENED PANEL

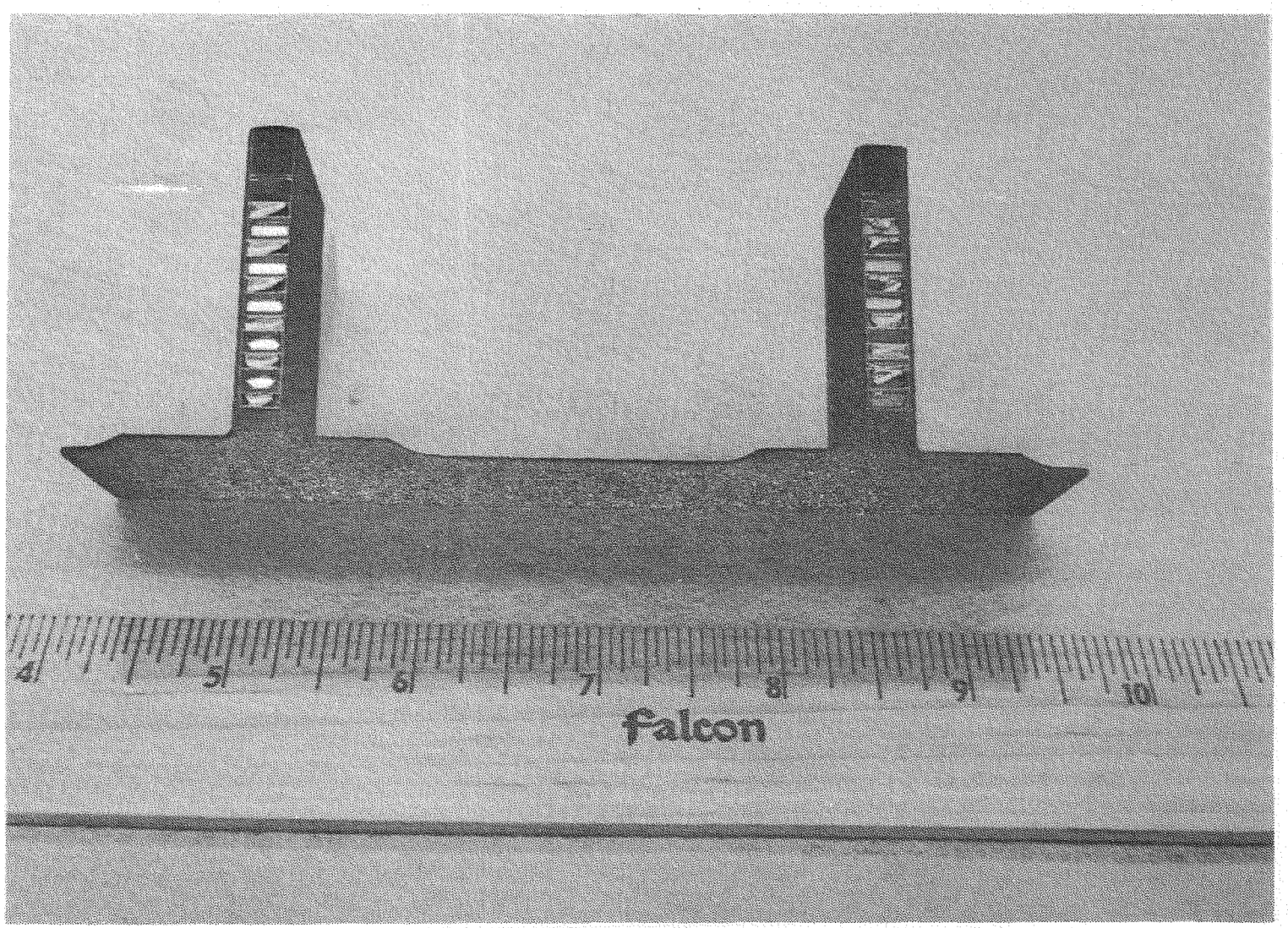

FIGURE 85. END VIEW OF HONEYCOMB BLADE STIFFENED PANEL

TASK 6 - ORTHOTROPIC ISOGRID STIFFENED PANEL

The isogrid stiffened panel was designed as a failsafe concept for a fuselage application. The panel consisted of a 24-ply skin, made from Narmco 5208/T-300 unidirectional tape, and an 87-ply isogrid stiffened configuration. The stiffeners were made from both unidirectional and biwoven 5208/T-300. The general construction is shown in Figures 86 and 87.

A wooden dummy isogrid panel was made to the dimensions on the Engineering drawing. (A picture of the wooden dummy part is shown in Figure 88.) Dapco #38-3 high temperature silicone rubber casting compound was mixed, degassed, and cast into the wooden dummy part. This was to make the rubber tool with cast recess for the isogrid structures. After a cure of 24 hours at room temperature and two hours at 140°F, the casting was removed from the wooden dummy part and post-cured for two hours at 250°F and four hours at 350°F. Dapco #3400 SC was then sprayed onto the rubber casting and cured at 350°F to obtain a permanent release surface on the tool.

The stiffener material was preplied in three layers (0° tape, 0° tape, 0/90° biwoven cloth) and vacuum compacted. The preplied material was cut into strips, .153 inch wide, to be laid into the stiffener slots of the rubber tool. Three methods of cutting the strips were tried to obtain strips of the proper size, with parallel sides and in a reasonable amount of time:

1. Razor blade cutting obtained very good quality, but the time needed to cut the number of strips in the part made this method impractical.

2. Water jet cutting would not give the quality that was necessary. The strips were too narrow to be cut this way. The jet stream pulled portions of the strip down into the table.

3. A band saw with a fine toothed rigid blade was the best method to cut the isogrid structural plies of densified carbon laminate. A stack of five strips could be cut at one time. The width was held constant by pushing the material against a fence. The quality was comparable to a razor cut, and the efficiency in cutting was far better.

The strips were then laid into the slots of the rubber tool. One strip was laid into each slot running across the width of the tool. Then one strip was laid into each of the angled slots, one direction at a time. This procedure continued until five strips were laid into each slot. The wooden dummy part was placed on the rubber tool for compaction of the stiffeners. The part was then densified under vacuum at 200°F for 10 minutes. The preplied stacks were spread at the "nodes" where the strips were overlapped during the densification to give the stiffeners a constant thickness. This procedure was repeated until all the stiffener plies were in place. Figure 89 shows one of the last strips being placed into the tool. Figure 90 shows the rubber tool with all the stiffeners layed up.

The 24-ply (0°, 90°, +45°) skin was layed up and compacted under vacuum and trimmed to size.

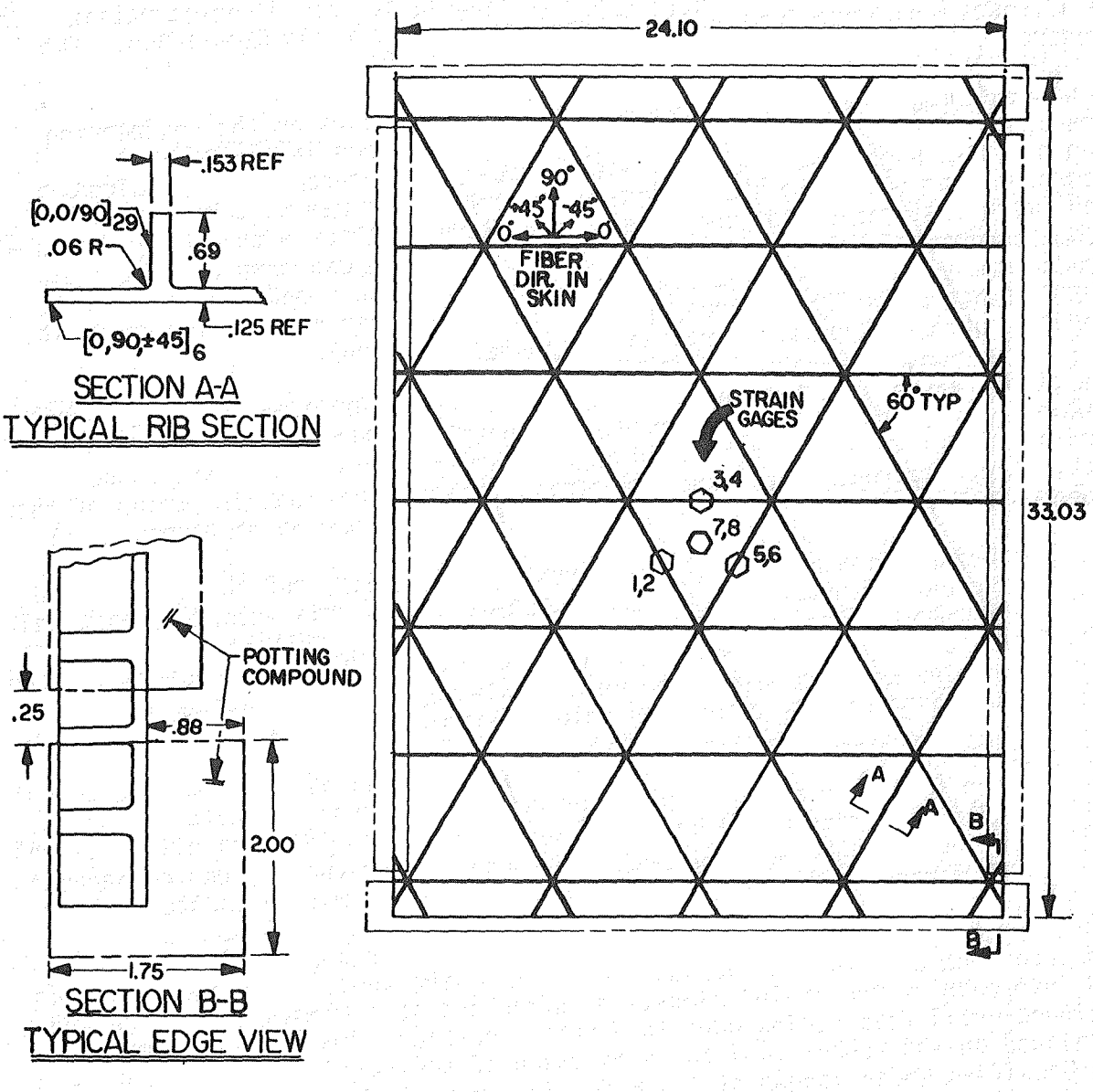

FIGURE 86. ISOGRID PANEL DESIGN

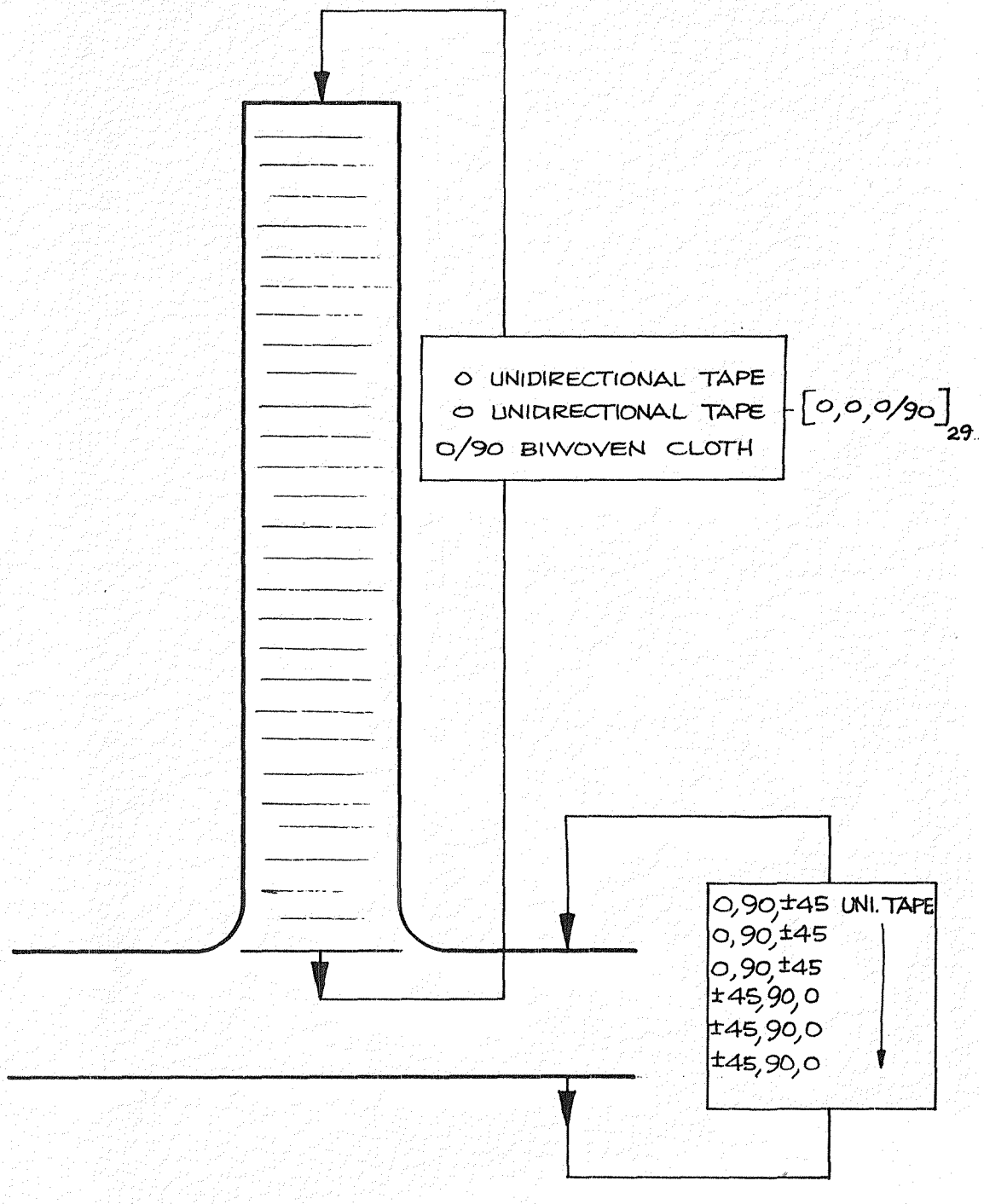

FIGURE 87. CROSS SECTION DETAIL OF ISOGRID RIB

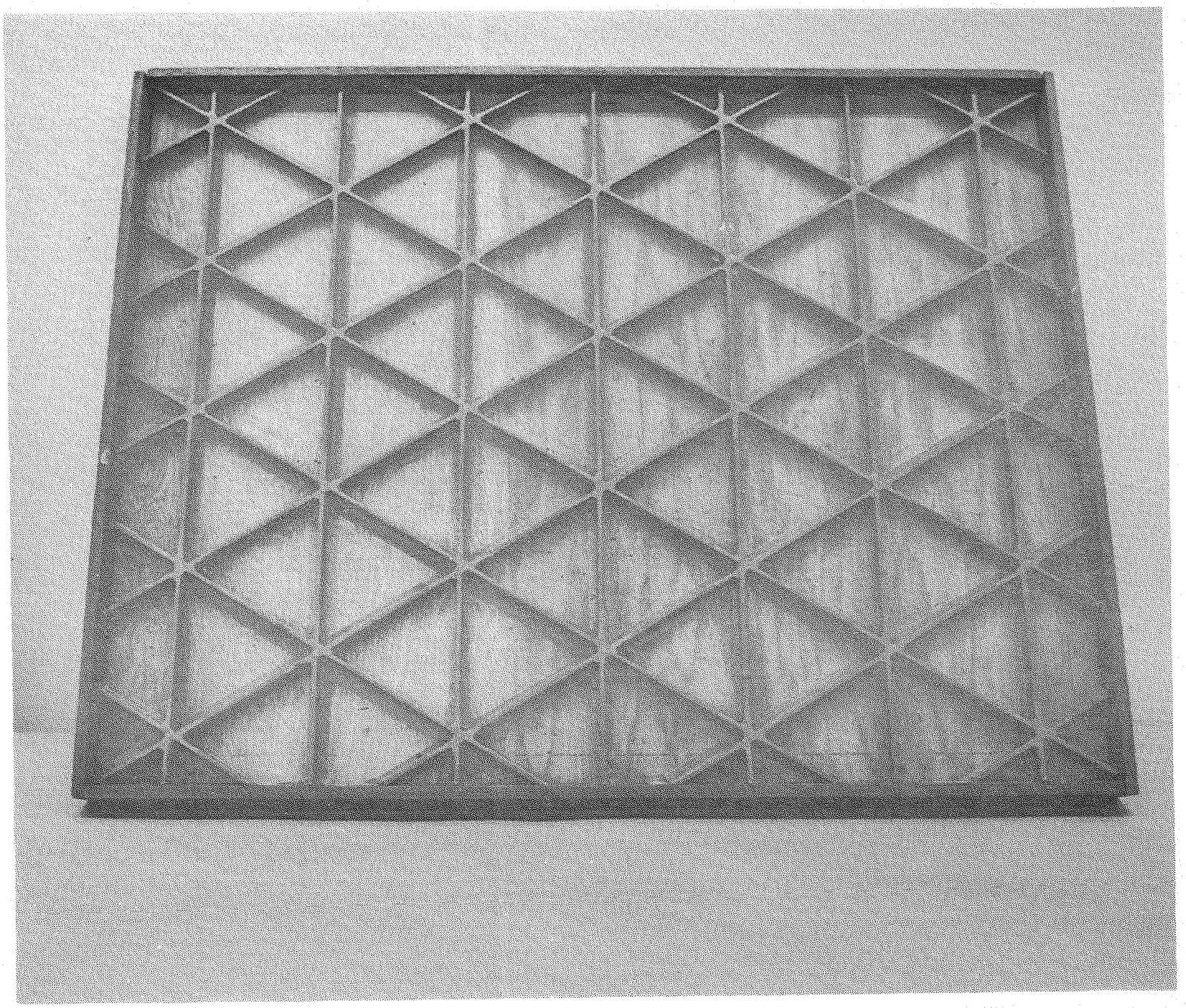

FIGURE 88. WOODEN ISOGRID TOOL

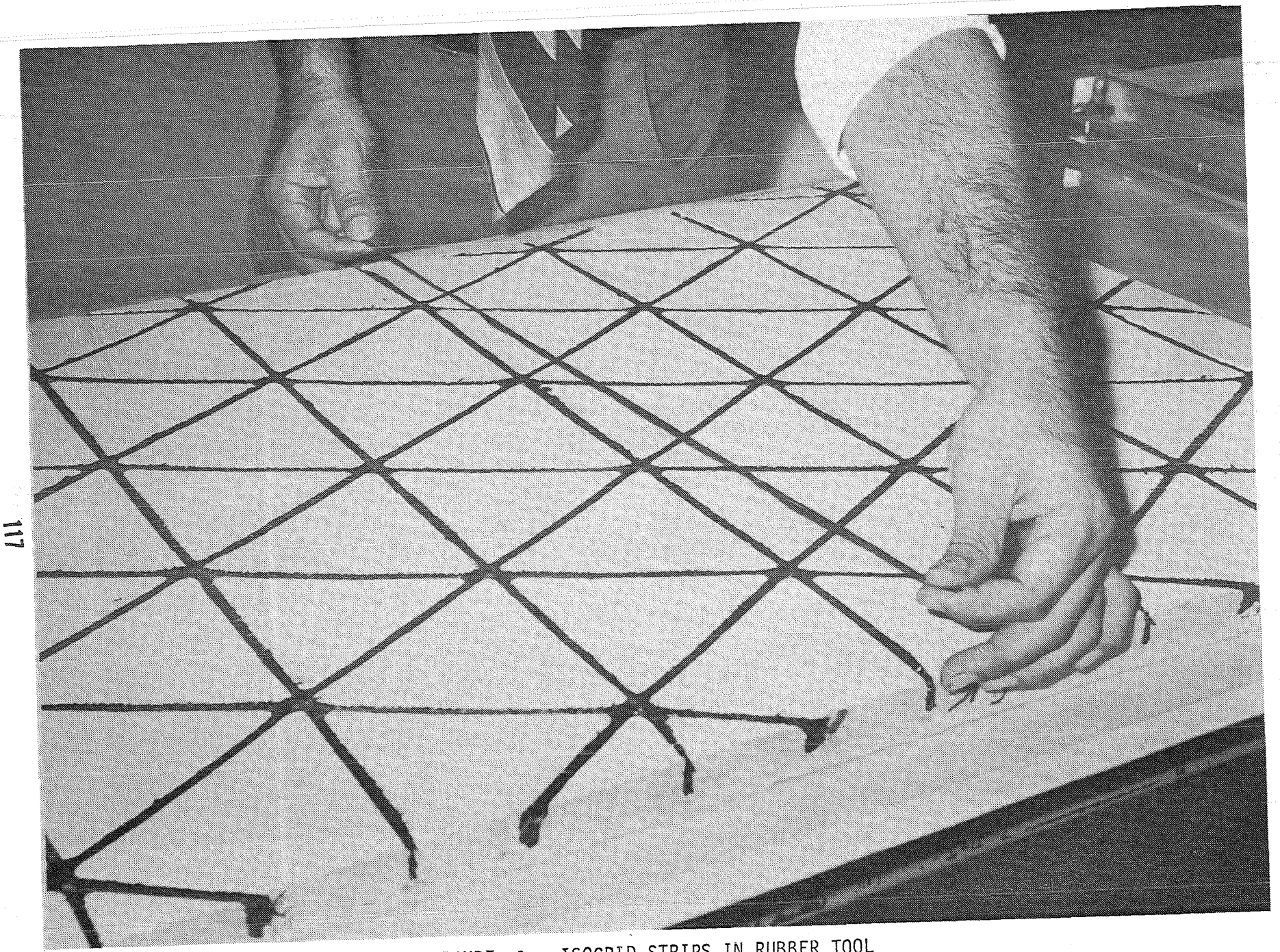

FIGURE 89. ISOGRID STRIPS IN RUBBER TOOL

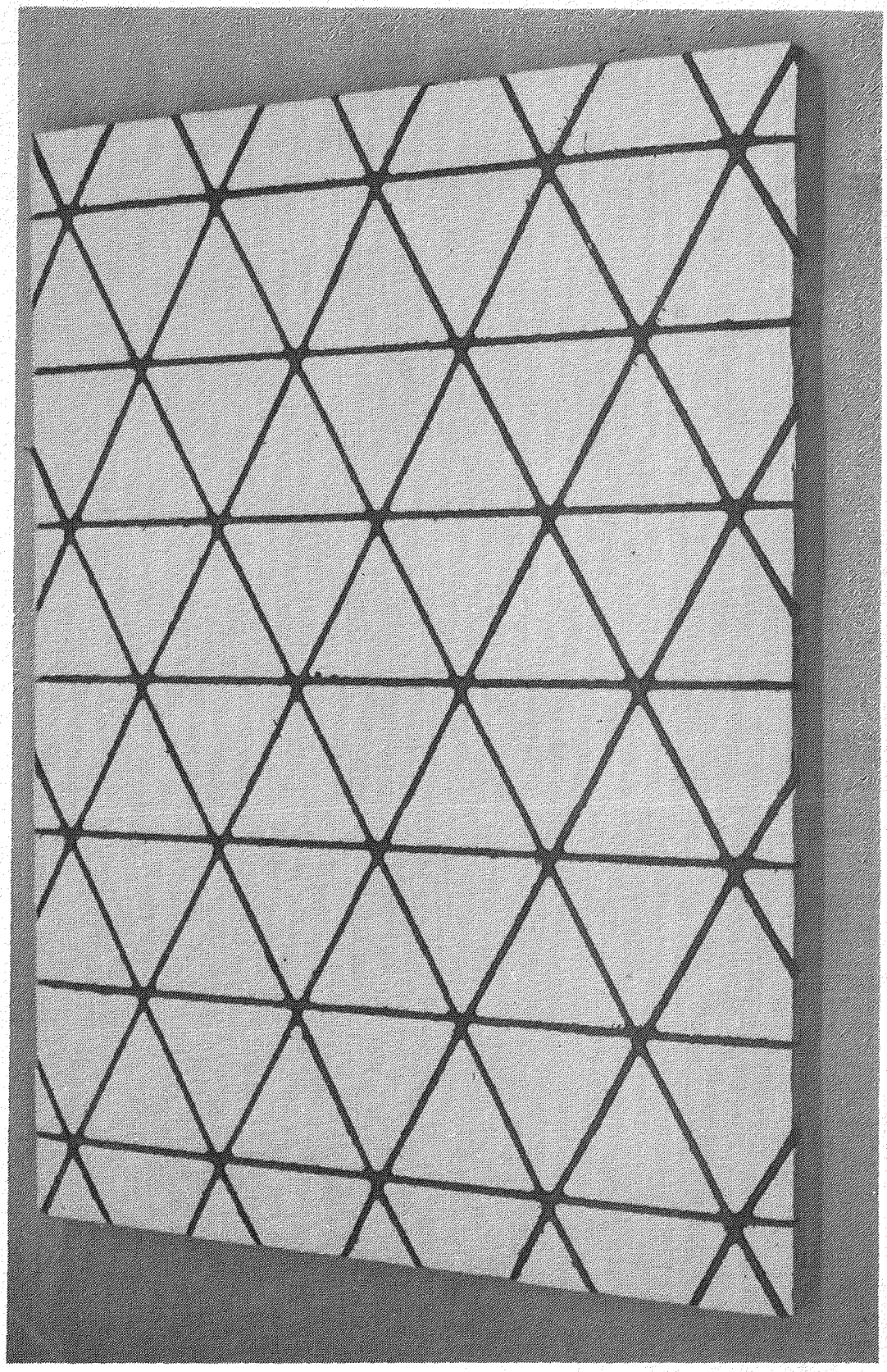

FIGURE 90. COMPLETE ISOGRID LAYUP IN RUBBER TOOL

Aluminum angles were welded into a frame with inside dimensions 1/8 inch longer and 1/8 inch wider than the rubber tool. The frame was then bolted onto an aluminum skin tool plate. Frekote 33 was applied to all aluminum surfaces to be exposed to the epoxy resin and baked at 350°F for one hour.

The skin was placed into the frame with eight plies of Mochburg bleeder cloth and one ply of Armalon porous release film between the layup and the tool surface. Figure 91 shows the aluminum angle frame secured on the skin tool plate with the graphite laminate skin in place. The rubber tool, with isogrid layup strips in place, was inverted and located on the densified skin in the framed tool. This assembly was placed under a vacuum bag and then cured in an autoclave by a standard 350°F 100 psi two-hour curing cycle.

Results of Panel Fabrication

Figure 92 shows the completed isogrid panel. The ends and the sides have been potted with an epoxy casting material. The ends have been machined flat and parallel for a compression test. The panel was of good quality and showed only mininum transfer of mark off of the isogrid on the front side of the panel.

Rework of Test Panel

Only a portion of the panel was destroyed during the first compression test. The undamaged portion of the panel was separated (cut) from the broken area and made ready for rework. Graphite prepreg cloth (5208/T300 eight-harness satin weave) angles were laminated in place at ±45° fiber pattern, with a layer of FM-300 adhesive film to obtain a superior bond between the isogrid and the skin. (See Figure 93.)

A high elongation silicone rubber sheet was stretched across the panel and sealed to the tool surface. Vacuum pressure was pulled and the bag stretched, free of wrinkles, to form a pressure bag. The angles were cured in the autoclave under standard conditions. The panel was then repotted with epoxy casting material, and the ends were machined flat and parallel for a second compression test.

Results of Rework

The completed panel showed 100% bond of angles to the blades and to the tool. The silicone bag stretched properly and produced angles free of wrinkles and of acceptable quality.

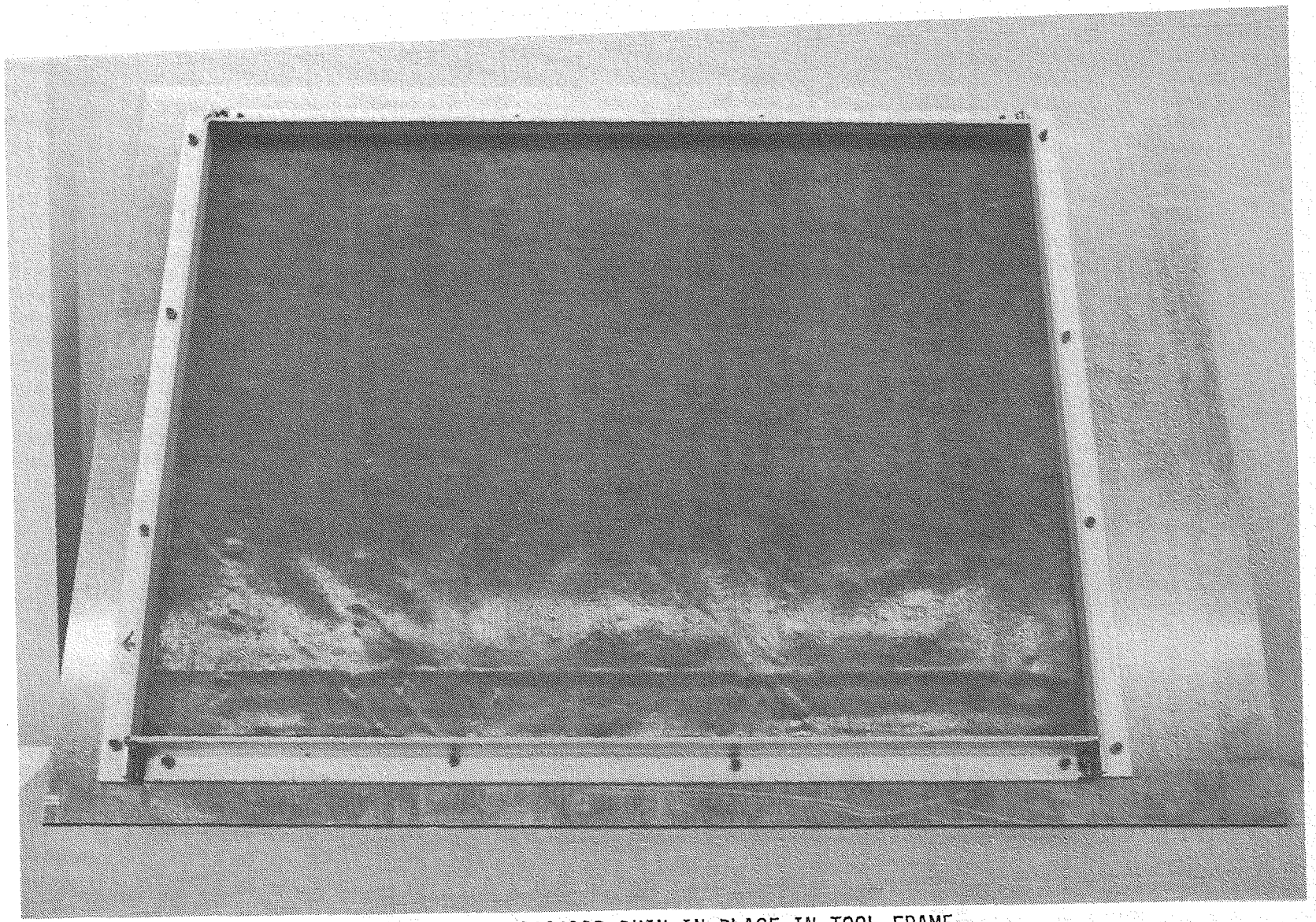

FIGURE 91. ISOGRID SKIN IN PLACE IN TOOL FRAME

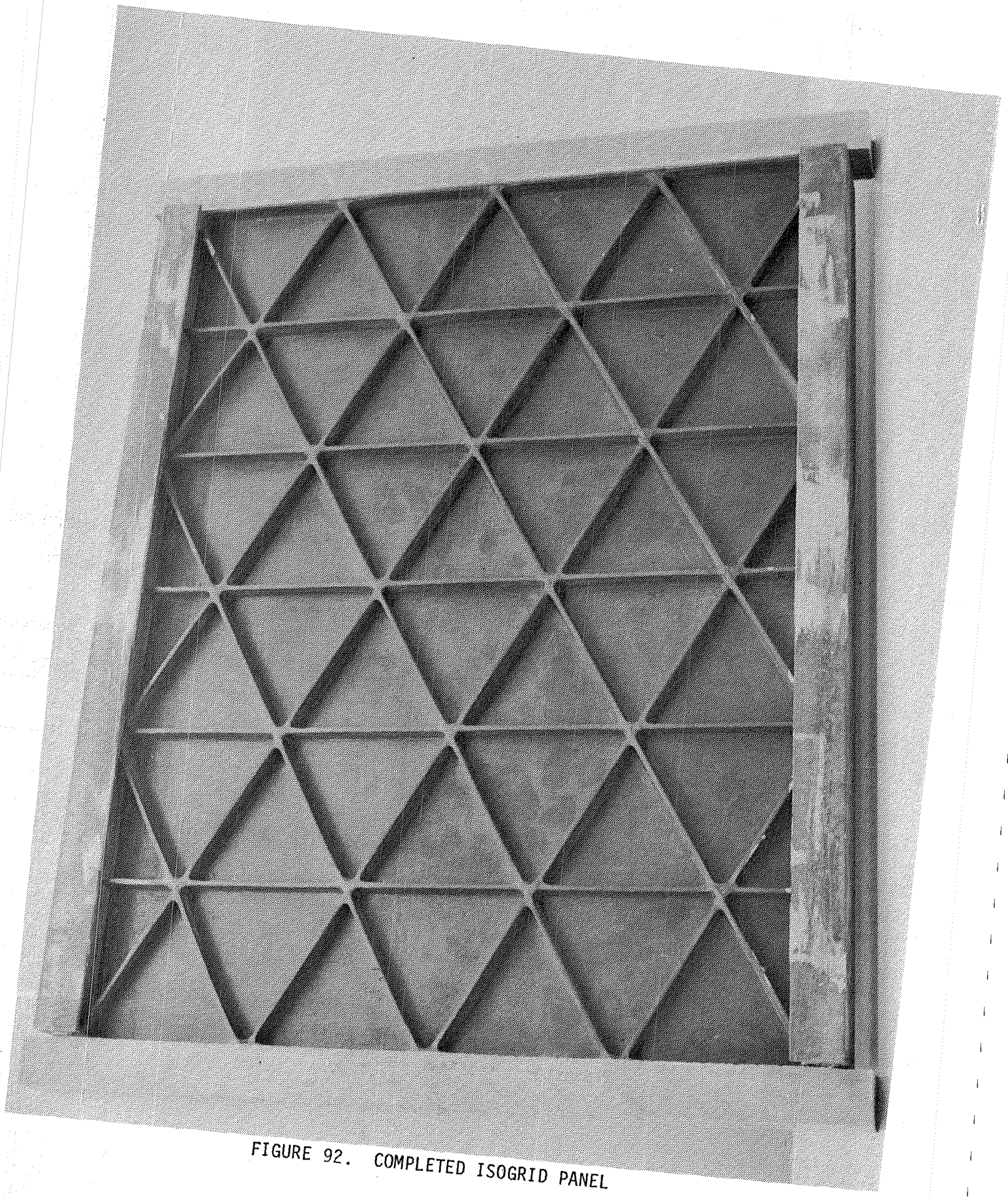

FIGURE 92. COMPLETED ISOGRID PANEL

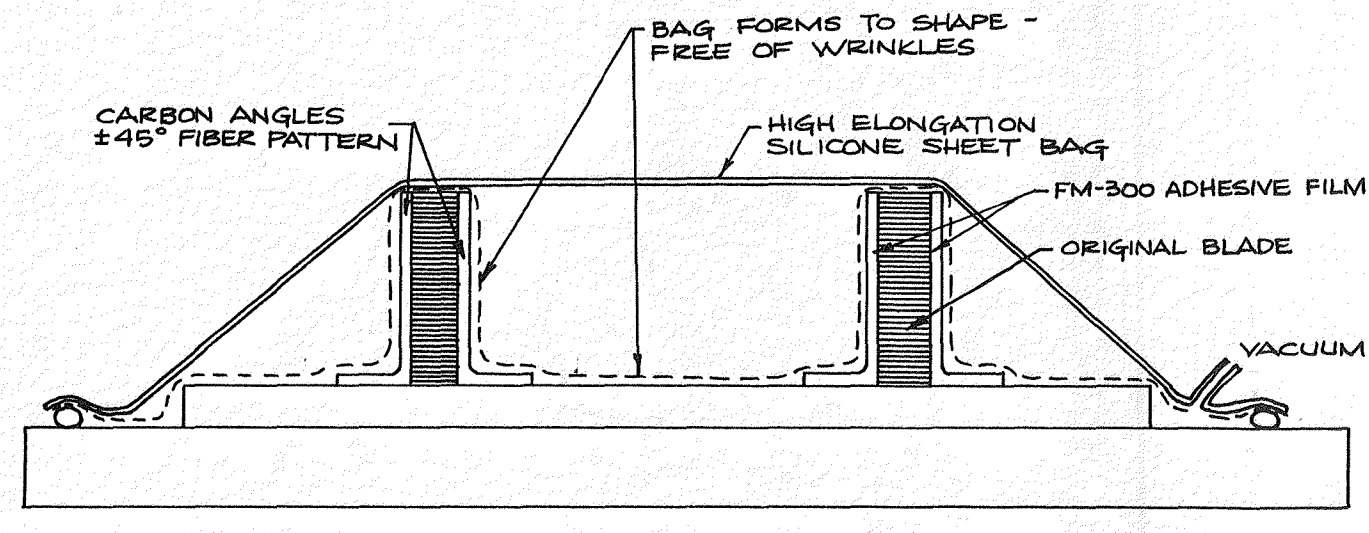

FIGURE 93. ANGLE REINFORCEMENT FOR ISOGRID ATTACHMENT TO SKIN

DISCUSSION OF RESULTS

Methods of fabrication have been developed to different levels of proficiency of part quality, manufacturing process risk, and tooling costs for advanced composite structural panels with different concepts of integral molded stiffeners. A number of panels were made of poor quality, particularly in the early stages of the program. The manufacturing processes and tooling concepts improved with the fabrication development experience and, during the later tasks, almost all of the panels were of good quality.

Hat Stiffeners

The process described in Section 1.1.6 and 1.1.7 was a reliable process with minimum fabrication difficulty and low-cost tooling. The process made panels of high quality as long as the upper cap hat thickness was below 0.12 inch.

The process described in Sections 1.2.13 produced good high-quality hat stiffened panels with thick caps. However, the tooling was expensive (required a machined female side tool), and the reliability of the process was marginal. It was difficult to insure a seal of the vacuum bag around the extruded silicone mandrels through out the complete curing cycle.

Although the process worked well, when pressure was not lost during cure, it is suggested that improvements can be expected with further process/tooling development in this area.

"J" Stiffeners

The process described in Sections 2.3.1 and 2.3.2 for light and medium load carrying "J" stiffened panels was a reliable and repeatable process for making good quality parts. There was no difficulty in fabrication of these parts although care must be taken to machine and cast the inner pressure tools to the proper dimensions.

"I" Stiffeners

The process described in Section 3.3 for a sine wave "I" stiffened panel was a reliable and repeatable process for marking high quality parts. The tooling and processing concept was the same as the "J" stiffened process. There were no difficulties in fabrication, and the same care must be taken to machine and cast the inner pressure tools.

Solid Blade Stiffeners

The process described in Section 4.5 for a solid blade stiffened panel was a reliable process that offered minimum fabrication difficulty and made panels with repeated high quality. The tooling was fairly expensive (required machined aluminum mandrels and cast silicone pressure mandrels). The lay-up procedure required butt joints between side-by-side plies of material. (The hard tool would rest on an overlap and not close properly over the complete part.)

The process described in Section 4.6 for a blade and cross rib stiffened panel was only used once. There were no problems in the fabrication of a panel of high quality. The soft silicone rubber mandrels allowed overlaps in the layup of skin with no fabrication problems. There were a large number of individual cast silicone mandrels, but there was no requirement for close tolerance expensive machining. The tooling costs were considered moderate.

Honeycomb Blade Stiffeners

The process described in Section 5.3 for a honeycomb blade stiffened panel was a reliable process that offered minimum fabrication difficulty and made panels with repeated high quality. Tooling concepts and cost and panel lay-up tolerances were the same as the solid blade stiffened panels. The steps of a precured cap, prebonded to the honeycomb, added cost to manufacturing but presented no fabrication problems.

Isogrid Blade Stiffener

The process described in Section 6. for an isogrid blade stiffened panel produced a single panel of good quality. The tooling, although requiring a dummy part, was a simple large single silicone rubber casting with metal holding frame. The hand lay-up process was very slow and thus expensive. The design concept does lend itself to automation, and the blade stiffeners could probably be, with development, filament wound on a reliable and economic basis. Additional attach angles, as applied as a secondary rework operation, seemed mandatory, to develop the desirable panel strength properties.

REFERENCES

1. Williams, Jerry G.; and Mikulas, Martin M., Jr.: Analytical and Experimental Study of Structurally-Efficient Composite Hat-Stiffened Panels Loaded in Axial Compression. NASA TM X-72813, 1976. (Also available as AIAA Paper No. 75-754.)

2. Williams, Jerry G.; and Stein, Manuel: Buckling Behavior and Structural Efficiency of Open-Section Stiffened Composite Compression Panels. AIAA J., Vol. 14, No. 11, Nov. 1976, pp. 1618-1626.

3. Rhodes, Marvin D.; Williams, Jerry G.; and Starnes, James J., Jr.: Effect of Low-Velocity Impact Damage on the Compressive Strength of Graphite-Epoxy Hat-Stiffened Panels. NASA TN D-8411, 1977.

4. Stein, Manuel; and Williams, Jerry G.: Buckling and Structural Efficiency of Sandwich-Blade Stiffened Composite Compression Panels. NASA TP 1269, September 1978.

5. Rhodes, Marvin D.; Williams, Jerry G.; and Starnes, James H., Jr.: Effect of Impact Damage on the Compression Strength of Filamentary-Composite Hat-Stiffened Panels. Selective Applications of Materials for Products and Energy. Vol. 23 of National SAMPE Symposium and Exhibition, Society of Advanced Material and Process Engineering, May 1978, pp. 300-319.

6. Williams, Jerry G.; Anderson, Melvin S.; Rhodes, Marvin D.; Starnes, James H., Jr.; and Stroud, W. Jefferson: Recent Developments in the Design, Testing, and Impact-Damage Tolerance of Stiffened Composite Panels. Proceedings of Fourth Conference on Fibrous Composites in Structural Design, California, November 14-17, 1978.

7. Rhodes, Marvin D.; and Williams, Jerry G.: Concepts for Improving the Damage Tolerance of Composite Compression Panels. Proceedings of Fifth DOD/NASA Conference on Fibrous Composites in Structural Design, New Orleans, Louisiana, 1981.

0465T

1. Report No.	2. Government Accession No.	3. Recipient's Catalog No.
NASA CR-172204		

4. Title and Subtitle	5. Report Date
GRAPHITE/EPOXY COMPOSITE STIFFENED PANEL FABRICATION DEVELOPMENT	March 1984
	6. Performing Organization Code
7. Author(s)	8. Performing Organization Report No.
R. J. Palmer	
	10. Work Unit No.
9. Performing Organization Name and Address	11. Contract or Grant No.
McDonnell Douglas Corporation Douglas Aircraft Company 3855 Lakewood Blvd. Long Beach, California 90846	NAS1-12675
	13. Type of Report and Period Covered
12. Sponsoring Agency Name and Address	Contractor Report
National Aeronautics and Space Administration Washington, DC 20546	14. Sponsoring Agency Code

15. Supplementary Notes

Langley Technical Monitor: Dr. Jerry G. Williams

Final Report

16. Abstract

This report describes the manufacturing development procedures used to fabricate a series of carbon/epoxy panels with integrally molded stiffeners. Panel size was started at 6 inches by 18 inches and one stiffener and increased to 30 inches by 60 inches and six integral stiffeners. Stiffener concepts were optimized for minimum weight (or mass) to carry stress levels from 1500 lbs/inch to 25,000 lbs/inch compression load. Designs were created and manufactured with a stiffener configuration of integrally molded hat, "J", "I", sine wave "I", solid blade, and honeycomb blade shapes.

Successful and unsuccessful detail methods of tooling, lay-up methods, and bagging methods are documented. Recommendations are made for the best state-of-the-art manufacturing technique developed for each type of stiffener construction.

17. Key Words (Suggested by Author(s))	18. Distribution Statement
Composites, graphite/epoxy, fabrication, tooling	FEDD Distribution

19. Security Classif. (of this report)	20. Security Classif. (of this page)	21. No. of Pages	22. Price
Unclassified	Unclassified	135	

Available: NASA's Industrial Applications Centers

End of Document