3 1176 01357 2566

NASA TM- 87709

NASA Technical Memorandum 87709

NASA-TM-87709 19860015273

HALOGEN OCCULTATION EXPERIMENT INTEGRATED TEST PLAN

L. E. MAULDIN, III AND A. J. BUTTERFIELD

MAY 1986

LIBRARY COPY

MAY 2 5 1986

LANGLEY RESEARCH CENTER
LIBRARY, NASA
HAMPTON, VIRGINIA

National Aeronautics and
Space Administration

Langley Research Center
Hampton, Virginia 23665

NF01275

PREFACE

The work described in this report was supported by all members of the Halogen Occultation Experiment (HALOE) project. One of the major difficulties involved with the preparation of this document was the lack of suitable guidelines in planning an in-house test program for a major flight instrument. Therefore, it was modeled after approaches used by successful aerospace companies with selective improvements made to fit the needs of the HALOE project. Although it may not be specifically applicable, it should provide future in-house flight test programs with helpful, general guidelines in preparation of similar documents. That is the purpose of this publication, which corresponds to the HALOE Project Office Controlled Document HALOE-09-034, Rev. B.

Lemuel E. Mauldin, III
Test Manager, HALOE Project
NASA Langley Research Center

N86-24744 #

This Page Intentionally Left Blank

TABLE OF CONTENTS

SECTION		PAGE
1.0	INTRODUCTION	1
1.1	Scope	1
1.2	Contents	1
2.0	INSTRUMENT DESCRIPTION, TEST REQUIREMENTS AND TEST ORGANIZATION	3
2.1	Instrument Description	3
2.2	Spacecraft Electrical Interface and Ground Test Equipment	10
2.3	Test Requirements Summary and Cross References	16
2.4	Test Implementation and Control	19
2.5	Quality Assurance Support	32
3.0	COMPONENT TESTING	33
3.1	General Considerations	33
3.2	Electronic and Electrical Elements	41
3.2.1	Electronic Parts	41
3.2.2	Electronic Circuit Board Testing	50
3.2.3	Chopper Motor and Drive Testing	51
3.2.4	Chopper Operating Characterization	52
3.2.5	Calibration Wheel, Motor and Drive	54
3.2.6	Thermistor Calibration	55
3.2.7	Pin Pullers, Evaluation	56
3.3	Radiometric Component Testing	58
3.3.1	Optical Filter Testing	58
3.3.2	Gas Cell Testing	60
3.3.3	Radiometer Channel (Bolometer) Detector Testing	63
3.3.4	Gas Channel (Photovoltaic) Detector Testing	65
3.3.5	Detector Life Evaluations	66

TABLE OF CONTENTS

SECTION		PAGE
3.3.6	Thermoelectric Cooler (TEC) Heat Transfer Validation .	67
3.3.7	Blackbody Characterization and Life Test	68
3.4	Pointer-Tracker Component Level Testing	71
3.4.1	Coarse Sunsensor Characterization Tests	71
3.4.2	Elevation Fine Sunsensor Functional Life Tests	72
3.4.3	Sunsensor Characterization Tests	74
3.4.4	BGA Flight Motor Tests	75
3.5	Environmental Verification Testing	78
4.0	SUBSYSTEM TESTING	94
4.1	General Considerations	94
4.2	Electronic System Operation and Evaluation, the "Spread" System	98
4.3	PEA/GEA/IETS Flight Acceptance Tests	106
4.4	Pointer-Tracker Tests Subsystems	109
4.5	BGA Flight Acceptance Test	114
4.6	Telescope-Sunsensor Thermal-Vacuum Boresight Stability and Thermal Model Validation	115
4.7	Dynamic Model Vibration Tests	122
4.8	Telescope-Sunsensor Mainframe Vibration	125
5.0	INTEGRATION AND CHARACTERIZATION TESTING.	128
5.1	General Considerations	128
5.2	Bolometer Detector Alignment	134
5.3	Alignment of Gas Channel Detectors	137
5.4	Optical Cross Talk and Initial Field-of-View Matching for Gas Channels	140
5.5	Initial System Power-Up Tests	143

TABLE OF CONTENTS

SECTION		PAGE
5.6	Initial Radiometric Performance	147
5.7	Characterization Tests	155
5.8	Characterization for Spectral Measurement Response.	159
5.9	Dynamic Range, Gas Response	162
5.10	Pointer-Tracker Characterization.	166
5.11	Command and Mode Operation.	169
6.0	INSTRUMENT ENVIRONMENTAL TESTING	172
6.1	General Considerations, Instrument Acceptance	172
6.2	Performance Verification Level I.	178
6.3	Electromagnetic Compatibility Tests	186
6.4	Magnetic Field Compatibilities.	190
6.5	Random Vibration and Mechanical Shock Tests	194
6.6	Mass Properties Measurements.	199
6.7	Thermal Vacuum	201
6.8	Performance Verification Level I	207
6.9	In-Band Spectral Evaluation.	207
7.0	Instrument Refurbishment Testing	208

LIST OF TABLES

TABLE 2.3-1	Test Requirements and Description of Tests, Cross Reference	17
TABLE 3.1-1	Summary of Pertinent Considerations for Parts and Electrical Component Testing	35
TABLE 3.1-2	Summary of Pertinent Considerations for Radiometric Component Testing	37
TABLE 3.1-3	Pertinent Considerations for Pointer-Tracker Components	39
TABLE 3.1-4	Environmental Requirements and Means for Compliance	40
TABLE 3.2.1-1	Summary of Screeing Test Requirements (Ref.MIL-STD-883C) For Class "S" Microelectronics	43
TABLE 3.2.1-2	Summary of Qualification Testing for Microcircuits	46
TABLE 3.2.1-3	Summary of HALOE Sponsored Parts Testing	48
TABLE 3.3.2-1	Summary of Gas Cell Testing	62
TABLE 3.5.1-1	Environmental Verification Summary for HALOE	80
TABLE 3.5.3-1	Random Vibration Verification Summary for HALOE	81
TABLE 3.5.7-1	Thermal Vacuum Test Conditions	88
TABLE 4.1-1	Summary of Operations Pertinent to Subsystem Testing	97
TABLE 5.1-1	Summary of Operations Pertinent to Instrument Integration Testing	130
TABLE 5.4.3-1	HALOE Optical Cross-talk Matrix	141
TABLE 5.5.3-1	Verifications Performed as Part of Power-Up for the IETS and Support Items	144
TABLE 5.5.3-2	Verifications Performed as Part of Instrument Power-Up	144
TABLE 5.6.1-1	Initial Radiometric Performance Tests	148
TABLE 5.7.3-1	Test Contents for Radiometric Evaluation and Characterization	157
TABLE 5.9.3-1	Candidate Fill-Conditions for Gas Response Testing	164
TABLE 5.10.3-1	Pointer-Tracker Performance and Characterization Tests	167

LIST OF TABLES (cont'd)

TABLE 5.11.3-1	Instrument Operating Verfications for a Sunsent Event	170
TABLE 5.11.3-2	Instrument Operating Verifications for a Sunrise Event	171
TABLE 6.1-1	Summary of Operations Pertinent to Instrument Environmental Testing	174
TABLE 6.1-2	Summary of Operating Verification Testing	176
TABLE 6.2.3-1	Contents of the Performance Verification Tests Level I	181
TABLE 6.7.4-1	Radiometric Measurements During Thermal Vacuum Testing	205
TABLE 7.1	Test Support for Refurbishment.	209

LIST OF FIGURES

Figure 2.1-1, The HALOE Instrument Assembled. 4

Figure 2.1-2, The HALOE Instrument, Principal Components. 4

Figure 2.1-3, Sequence of HALOE Orbital Events. 5

Figure 2.1-4, Operating Block Diagram for the HALOE Instrument. 6

Figure 2.2.1-1, The Instrument Electronics Test Set and Interconnections. 11

Figure 2.2.3-1, Front Panel of the GCETS Showing Signals and Connectors. 14

Figure 2.4-1, HALOE Project Organization. 20

Figure 2.4-2, Flow of Test Related Events 21

Figure 2.4.3-1, Agenda Topics For The Test Coordination Meeting 23

Figure 2.4.5-1, Cover Page for a HALOE Test Procedure 26

Figure 2.4.6-1, Agenda Comparison For Test Coordination and Test Readiness Review 29

Figure 2.4.8-1, Cover Page for a HALOE Test Report. 30

Figure 3.1-1, Testing for Parts and Electrical Components 34

Figure 3.1-2, Testing for Radiometric Components. 36

Figure 3.1-3, Testing for Pointer-Tracker Components. 38

Figure 3.5.3-1, Summary of HALOE Random Vibration Environments. 83

Figure 4.1-1, Electronics Subsystem Testing. 95

Figure 4.1-2, Flow of Tests for the Pointer-Tracker Subsystem 96

Figure 4.4-1, General Laboratory Configuration for Pointer-Tracker Subsystem Testing. 111

Figure 4.6-1, General Configuration for Thermal-Vacuum Boresight Stability and Thermal Model Evaluation Tests. 116

LIST OF FIGURES (cont'd)

Figure 4.6-2, Optics for Thermal Vacuum Boresight Alignment Measurements. 118

Figure 4.8-1, Configuration for the Telescope-Sunsensor-Mainframe Vibration Test 126

Figure 5.1-1 Flow of Tests and Events for HALOE Integration Testing. 129

Figure 5.1-2 General Laboratory Configuration During Integration. . . .132

Figure 5.1-3 Optical Schematic for the RSTS. 133

Figure 5.2.2-1 Test Setup for the Bolometer Alignment 136

Figure 5.3.2-1 Test Setup for the Alignment of the Photovoltaic Detectors. 138

Figure 5.8.2-1 General Configuration for the Monochromator Installation. 160

Figure 6.1-1 Flow of Tests and Events for HALOE Environmental Testing 173

Figure 6.2.2-1 Laboratory Configuration for System Testing 179

Figure 6.5.2-1 Instrument Mounting Configurations for Three-Axis Random Vibration and Mechanical Shock 195

Figure 6.7-1 Concept for Instrument Thermal-Vacuum Exposure Test . . . 202

LIST OF ABBREVIATIONS

A/D	Analog to Digital Converter
AGC	Automatic Gain Control
Az	Azimuth
BCD	Binary Coded Decimal
BGA	Biaxial Gimbal Assembly
Cal Wheel	Calibration Wheel
CG	Center of Gravity
CSS	Coarse Sun Sensor
DAC	Digital to Analog Converter
DC/DC	Direct Current to Direct Current Converter
DPA	Destructive Physical Analysis
EMC	Electromagnetic Compatibility
EMI	Electromagnetic Interference
El	Elevation
ERD	Engineering Requirements Document
FAT	Flight Acceptance Test
FOV	Field-of-View
FSS	Fine Sun Sensor
FTIR	Fourier Transform Interferometer
GCETS	Gas Correlation Electronics Test Set
GEA	Gimbal Electronics Assembly
GFC	Gas-Filter Correlation
GIIS	General Instrument Interface Specification

(List of Abbreviations cont'd)

grms	Acceleration root mean square
GSE	Ground Support Equipment
HALOE	Halogen Occultation Experiment
IB	Input Buffer
IETS	Instrument Electronics Test Set
I/F	Interface
IFOV	Instantaneous Field-of-View
IISU	Instrument Interface Simulator Unit
IR	Infrared
LED	Light Emitting Diode
MLI	Multi-Layer Insulation
MUX	Multiplexer
ND	Neutral Density
NEM	Noise Equivalent Modulation
NRZ	Non-Return to Zero
PARD	Performance Assurance Requirements Document
PCM	Pulse Code Modulation
PEA	Platform Electronics Assembly
PIND	Particle Impingement Noise Detection
PPL	Preferred Parts List
PRD	Project Requirements Document
PROM	Programmable Read-only Memory
PRSTS	Portable-Radiation Stimulus Test Set

(List of Abbreviations cont'd)

PV	Photovoltaic
QPL	Qualified Parts List
R	Signal from the Reference Blackbody (See Signals Below)
RAM	Random Access Memory
RSTS	Radiation Stimulus Test Set
SEM	Scanning Electron Microscope
S/N	Signal To Noise
SOW	Statement-of-Work
SS	Sun Sensor
TEC	Thermoelectric Coolers
TRD	Test Requirements Document
TV	Thermal-Vacuum
UARS	Upper Atmosphere Research Satellite
UV	Ultraviolet
V	Signal from Solar (or Simulated) Source See Signals Below

HALOE SIGNAL DEFINITIONS AND CONVENTIONS

V	Solar Signal considered as transmitted through vacuum. Science measurement in Volts DC, telemetered.
V gas	Solar Signal from the GFC optical path containing a gas cell, Volts AC.
V vac	Solar Signal from the GFC optical path with no gas cell, Volts AC, (Becomes V for GFC channels after demodulation).
ΔV	Solar Difference Signal (V vac - V gas) science measurement in Volts DC, telemetered.
R	Signal from onboard reference blackbody through GFC channels, Volts DC, telemetered.
R gas	Reference signal from the GFC optical path containing a gas cell, Volts AC.
R vac	Reference signal from the GFC optical path with no gas cell Volts AC, (Becomes R for GFC channels after demodulation).
ΔR	Reference Difference Signal, (R vac - R gas) Provides input to AGC, Volts DC, Telemetered.
AGC	Multiplying factor operating on V gas such that V gas = V vac when viewing the exoatmospheric sun. Volts DC, Telemetered.

1.0 INTRODUCTION

1.1 Scope

The HALOE Integrated Test Plan describes the test program which will provide flight acceptance of the HALOE instrument and will demonstrate that the instrument meets its performance requirements. Only one flight instrument will be fabricated, therefore, the test program must provide all of the instrument characteristics required to support the processing and analysis of flight data. In addition, testing must also provide the operating experience necessary for an effective flight team and science team. The flow of testing will accomplish the necessary development and show qualification for the UARS. The preparations for flight will begin with the replacement of selected optical and electronic components and conclude with those tests necessary to show Flight Acceptance for the UARS. The tests are designed to be responsive to requirements given in the HALOE Test Requirements Document HALOE-13-054. This document provides the overall test sequence logic from component, subsystem, and system level testing. Each test performed on the flight part, subsystem, or system is described in sufficient detail to allow preparation of the test procedure. Also, the management system for test preparation and test coordination is described. Testing that occurs during UARS spacecraft integration will be defined later in a more appropriate document.

1.2 Contents

Section 2: A brief description of the instrument and supporting equipment is given. A matrix relates requirements to tests. This section also describes the management system which implements the tests.

Section 3: Testing performed at the component level is given.

Section 4: Testing performed on major subsystems is given.

Section 5: Testing which accompanies the assembly and integration of subsystems into an operating instrument is given.

Section 6: Testing of the assembled instrument to verify and show compatibility with environments is given.

Section 7: Testing in support of refurbishment is summarized in terms of previously developed tests.

2.0 INSTRUMENT DESCRIPTION, TEST REQUIREMENTS AND TEST ORGANIZATION

2.1 Instrument Description

The instrument configuration shown in figures 2.1-1 and 2.1-2 was selected to meet the HALOE experiment objectives. It is the result of evaluating several instrument concepts and performing tradeoff studies during the system definition phase. The operating events for the HALOE instrument in orbit are shown in figure 2.1-3.

The instrument consists of an optics unit, supported on a two-axis gimbal, and an off-gimbal electronics unit. The optics unit contains the optics, chopper, detectors, preamps, signal processing, and A/D converter for the gas correlation channels and radiometer channels. The gimbal assembly provides azimuth and elevation rotation of the optics unit with ±185 degree azimuth range and a 39 degree elevation range. The electronics unit provides command processing, motor drives, sequence timing, mode control, power conditioning, pointer/tracker control, and data handling. An instrument operating schematic is shown in figure 2.1-4. The HALOE Instrument Description Document, HALOE-02-028, provides a more detailed description.

2.1.1 Radiometric Measurement System

A rectangular field stop at the focal point of a 16cm diameter Cassegrain telescope determines the HALOE Instantaneous Field-of-View (IFOV). A chopper, which is located at an image of the field stop, provides modulation of solar energy at one frequency and modulation of an internal blackbody radiometric reference at a second frequency. The signals generated from the reference source (R signals) are used via automatic gain control (AGC) loops to correct the instrument-related changes to the solar energy measurements obtained by the Gas Correlation Channels.

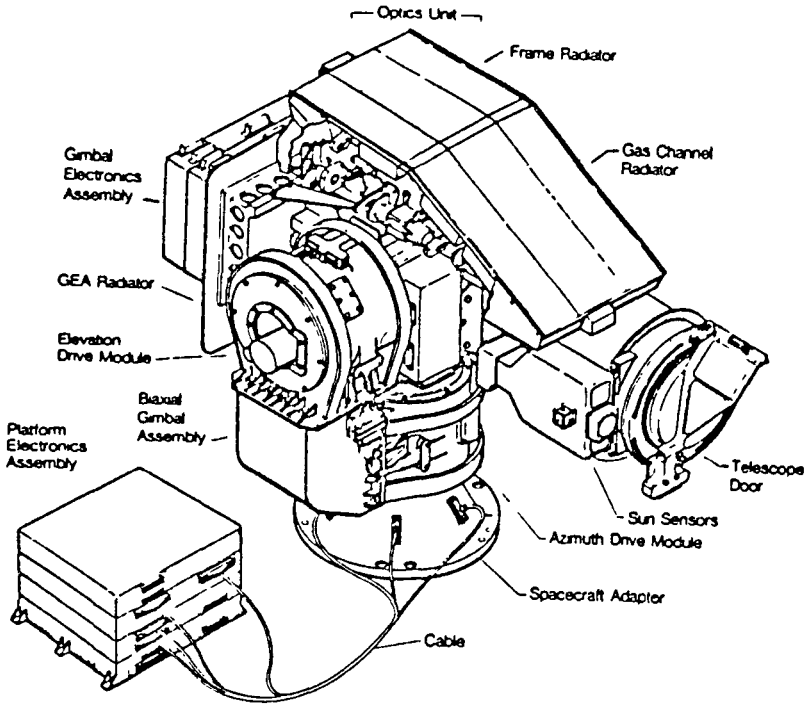

Figure 2.1-1, The HALOE Instrument Assembled

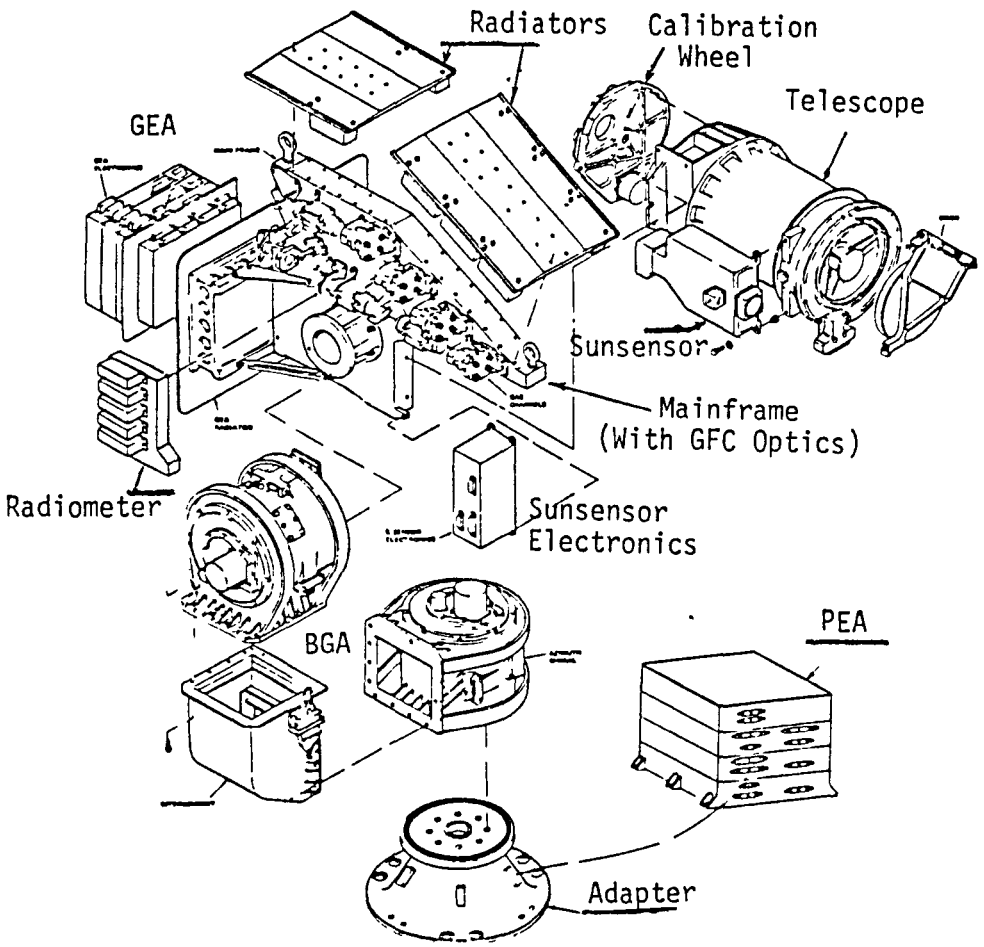

Figure 2.1-2, The HALOE Instrument, Principal Components

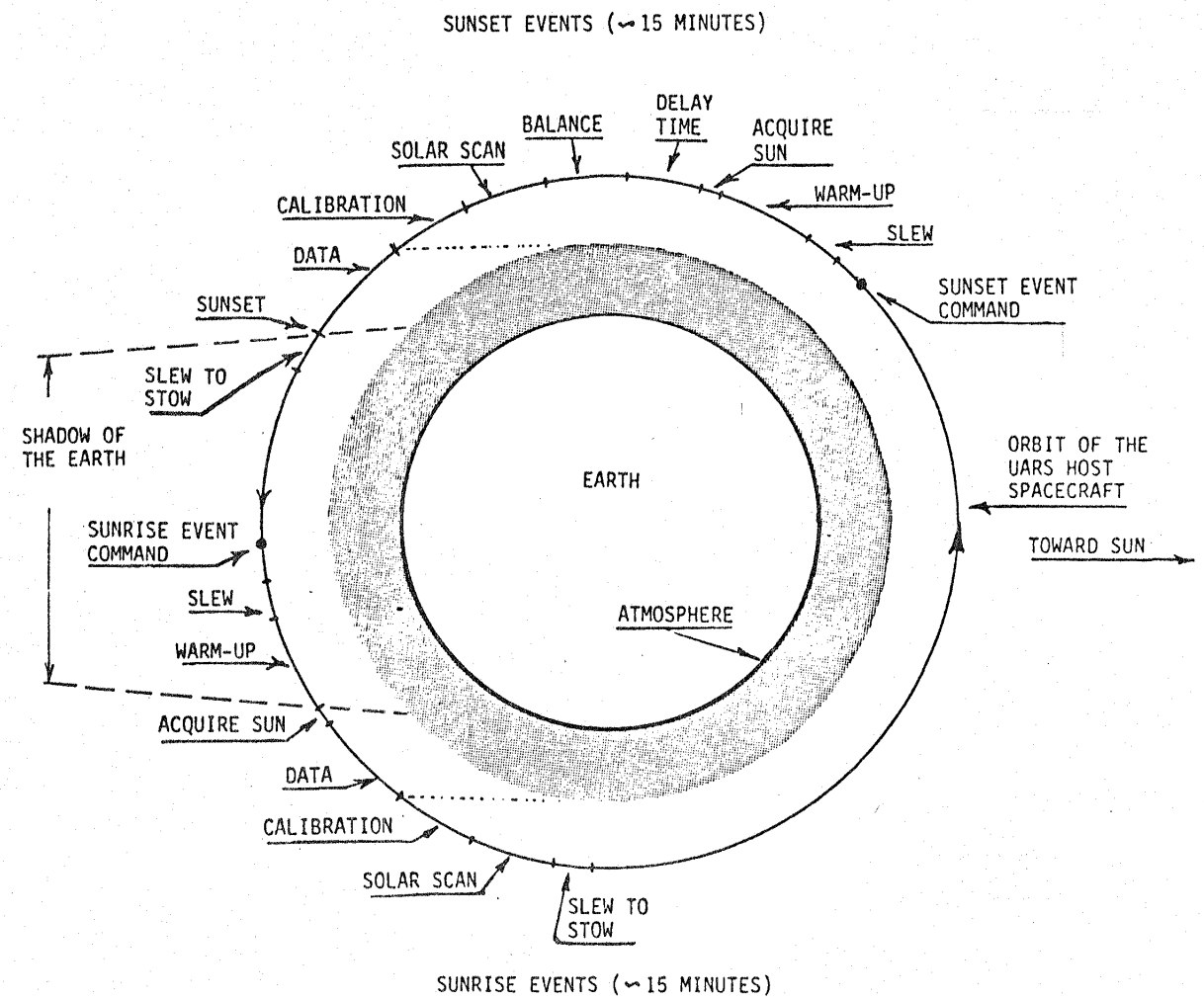

Figure 2.1-3, Sequence of HALOE Orbital Events

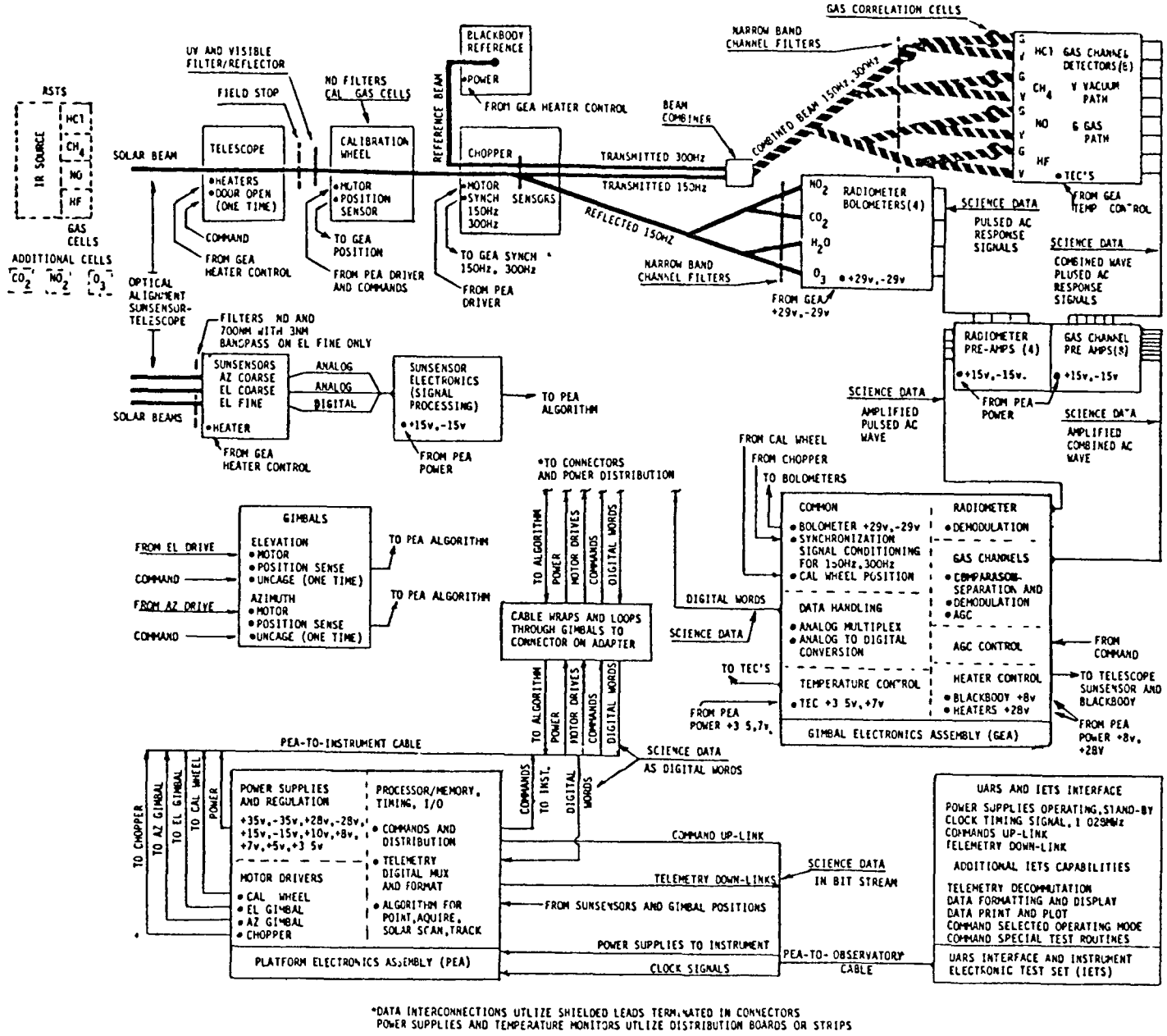

Figure 2.1-4, Operating Block Diagram for the HALOE Instrument

The optical beam is separated by the chopper into a radiometer beam and the gas correlation beam. Beam splitters and filters further divide each of these beams into four channels. The signals from the four radiometer channels are demodulated into a DC voltage (V) and telemetered using standard signal processing techniques. Each of the four gas correlation channels contains two paths. One of the paths contains a gas cell (Signal is V gas) the other path does not (Signal is V vac). The AGC loop operates in the signal from the gas path to achieve an exact balance when viewing the Exoatmospheric sun. Then, a unique signal processor measures the difference in outputs during an occultation event; the difference (ΔV signal) is correlatable to the gas properties in the atmosphere.

A stepper-driven calibration wheel, which is located after the field stop on the recollimated beam, provides measurements of gas response and signal linearity using the exoatmospheric sun as an energy source. The calibration wheel contains eight gas-filled cells and three neutral density filters for these measurements.

2.1.2 Command and Data Subsystem

The HALOE instrument operates virtually autonomously once powered and initialized after launch. However, for each UARS 180° yaw maneuver the HALOE instrument may require reinitialization (depends upon power-down of the instrument). Once commanded into the operate mode, the instrument performs a sun acquisition, balance, solar scan, calibration, track, and stow sequence while concurrently generating the required science and engineering data.

The instrument automatically alternates performing a sunrise or sunset sequence unless commanded otherwise. The capability exists to command instrument initialization. Eight discrete (bi-level) and sixteen 16-bit serial digital commands are used for instrument initializion and routine

operation. The data system digitizes the science and engineering data (12-bit quantization) into a NRZ-L coded serial PCM telemetry stream of 4000 bits/sec. Additionally, 24 analog housekeeping measurements and 8 discrete (bi-level) status checks are provided to the spacecraft interface. The instrument requires a continuous 1.024 MHz square wave clock signal for internal timing and telemetry synchronization.

2.1.3 Power Subsystem

The HALOE instrument will receive its primary +28V power from the UARS spacecraft. A DC/DC switching converter supplies all of the necessary voltages for the instrument. The power consumption is dependent on the particular instrument mode. Between events, the instrument is in the standby mode with a nominal power consumption of 100 watts. When commanded to the operate mode, the consumption increases to a nominal 123 watts with a peak of 163 watts during the initial slew for sun acquisition.

2.1.4 Pointer/Tracker Control Subsystem

The HALOE instrument is pointed by coarse sunsensors, a fine sunsensor, and stepper-motor driven gimbals in a microprocessor-based, closed-loop, feedback control system. The Bi-axial Gimbal Assembly (BGA) contains independently controlled azimuth and elevation gimbals. Acquisition and tracking control signals for the gimbals are derived from the sunsensors. The coarse sunsensors are analog devices which can acquire the sun over a ±5.75 degree on-axis by ±5 degree cross-axis field-of-view. The azimuth coarse sunsensor is also used to track the azimuth radiometric centroid of the solar disc during a data-taking event. The elevation-axis fine sunsensor is a 256 element Reticon linear array detector which provides 16.2 arc second resolution in elevation angle. The elevation-axis fine sunsensor, which has a 0.7 degree conical half-angle field of view, is used to control the

elevation gimbal during solar scans (from which the limb darkening curve is derived) and to lock the instrument instantaneous-field-of-view (IFOV) at a specified elevation position on the solar disc during calibration and solar occultation. Sunsensor and gimbal position data are processed by the data handling electronics and downlinked in the science telemetry data stream.

2.2 Spacecraft Electrical Interface and Ground Test Equipment

The interface with the UARS spacecraft includes power, clock signals, commands, and telemetry data. Formal interface documentation specifies these functions in detail; the test equipment described below simulates these functions for control and operation of the instrument.

2.2.1 Instrument Electronics Test Set (IETS)

The IETS simplified block diagram is shown in figure 2.2.1-1. The system is minicomputer based and has the capability to emulate the spacecraft interface and monitor performance during subsystem, integration, and system level tests. In addition, it has the capacity to store and retrieve raw or reduced instrument telemetry and performance data. It will also perform instrument data reduction and performance evaluations. The IETS consists of the following major elements.

A. Computer System

The IETS contains a general purpose disk-based computer system to provide real-time, computer-controlled instrument operation and monitoring; instrument data acquisition, reduction, and storage; and software development support. The test software is used for post-test data reduction, quick-look analysis, and performance verification. The computer system equipment and software items include:

1. Minicomputer system with peripherals to provide for software development, real-time computer-controlled testing, and post-testing data analysis and performance verification.
2. HALOE/UARS interface to provide power to the instrument, to issue commands to the instrument, and to gather and monitor

INSTRUMENT ELECTRONICS TEST SET

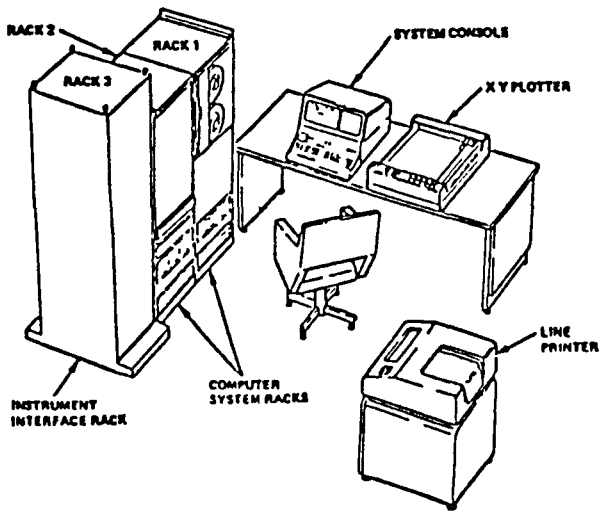

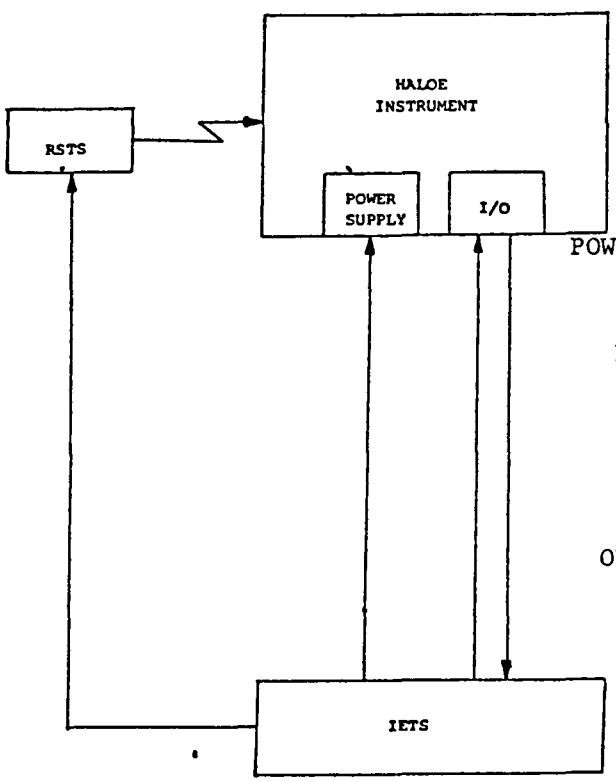

POWER-28VDC Primary
28VDC Heater/Motor
28VDC Survival Heater

IN-1.024 MHz Clock
Major Frame Rate
Serial Digital Commands
4-Impulse Commands
8-Power Pulse Commands
4-Relay Commands

OUT-Serial Digital Data
24-Analog Telemetry
12-Bi-Level Telemetry
4-Thermistor Telemetry

Figure 2.2.1-1, The Instrument Electronics Test Set and Interconnections

telemetry and test point signals from the instrument. This interface circuitry simulates UARS termination, drive, and isolation.

3. Data recording and general purpose test equipment.

4. Software to perform the required computer functions.

B. Spacecraft Emulation

The IETS will electrically and functionally emulate the UARS spacecraft on which the instrument will be flown. This includes providing command signals to the instrument and receiving the telemetry data from the instrument in a manner consistent with that of the spacecraft.

2.2.2 Radiation Stimulation Test Set (RSTS)

The RSTS provides radiometric stimulation for the radiometer and gas correlation channels. The output beam collimation angle simulates that of the sun at the entrance aperture of the HALOE telescope. The optical path within the RSTS is configured to permit the insertion of polarizers or gas cells with the cells inserted either singly or in pairs as means to evaluate or characterize the radiometric performance of the instrument.

2.2.3 Gas Correlation Electronics Test Set (GCETS)

The Gas Correlation Electronics Test Set (GCETS) provides an independent measurement, monitor, or display access to the test points built into the GEA plus separate demodulation of V vac together with demodulations of the V gas and R gas signals which the instrument does not provide. The GCETS interconnects with the two dedicated test connectors on the GEA by means of shielded cables. The outputs from the GCETS provide shielded interconnections for an independent measurement, monitor, display or data acquisition system that would be configured to meet the needs of a specific

test. Figure 2.2.3-1 shows the front panel of the GCETS which contains all of the interconnects. The unit is self-contained in an aluminum suitcase and therefore portable. The specific capabilities provided are:

A. Continuous independent access to the data signals which are the inputs to telemetry. The left side of the GCETS front panel presents all the test points from the GEA, the test points identified as "Demod out" include all of the DC signals which are multiplexed into the science data telemetry return. The principal science data appear as the eight "V" and four "ΔV" channels (telemetered 8 per sec) supplemented by R, ΔR and AGC (telemetered 1 per sec).

B. Signals not compatible with telemetry. The test points include the 12 detector-generated AC response signals as they enter the GEA. In addition, the unfiltered outputs from the ΔV (DV) and ΔR (DR) demodulation switches are accessed; the DR signal is one of the inputs to the AGC control circuit.

C. Chopper-generated demodulator switching signals. The 150Hz signals which drive the switches in the synchronous demodulation for both the gas correlation and radiometer are presented for display or monitor (these signals are phased 90° apart). In addition, the 300Hz for the reference blackbody is presented for display or monitor. Access to these signals is primarily intended to establish or verify synchronization between the detector output signals and the operation of the switches. Adjustment for both the 150Hz and 300Hz must be performed using signals from the gas correlation channels. The 150Hz drive for the radiometer is extracted from the 300Hz signal generated for the reference blackbody.

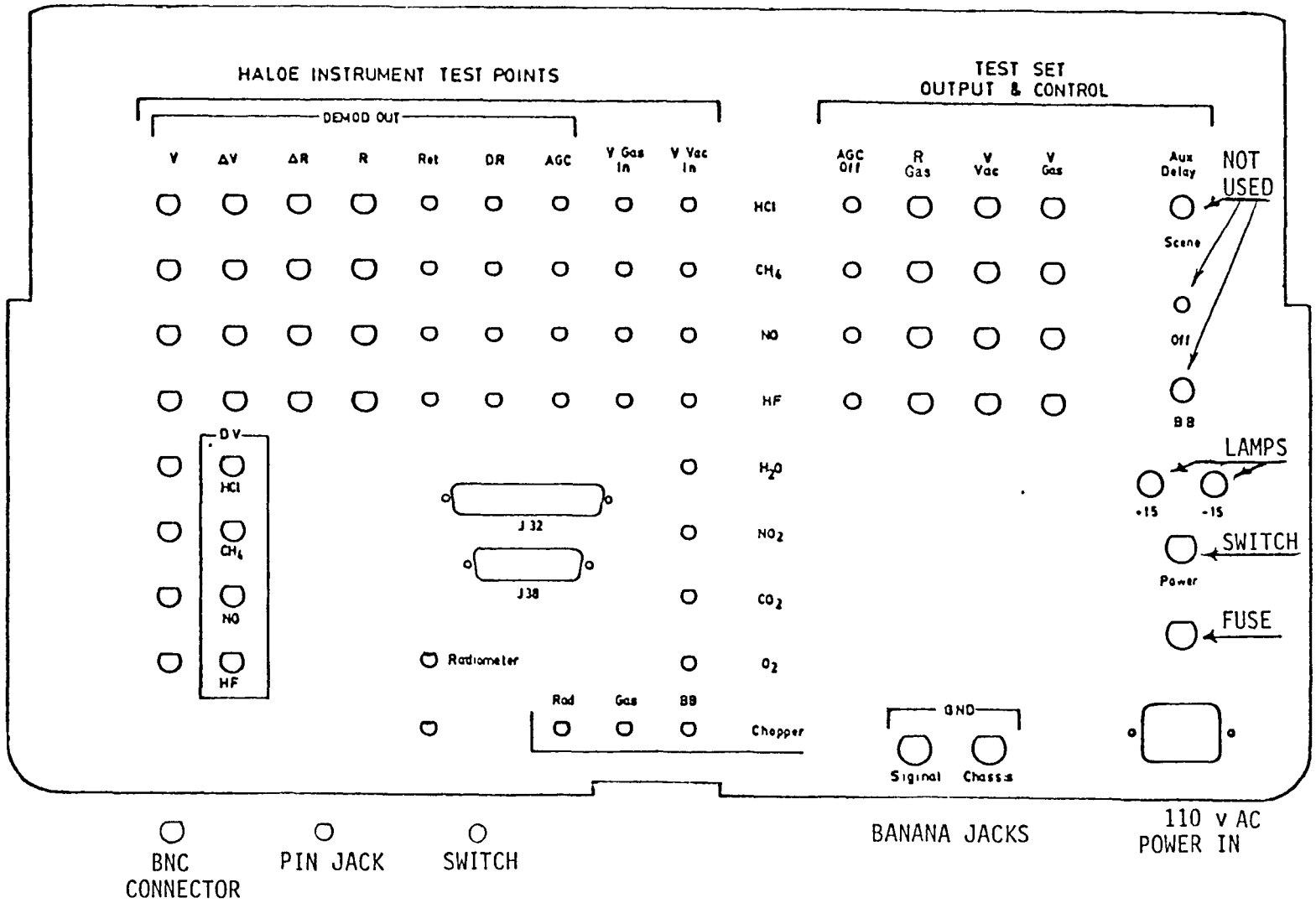

Figure 2.2.3-1, Front Panel of the GCETS Showing Signals and Connectors

D. AGC on-off Switch (Right Section). The operation of the switch defeats the AGC. The "off" position of the switch grounds an input voltage to a multiplier microcircuit and, thereby, holds the output of the multiplier at unity.

E. Independent Demodulation of Gas Correlation Channel Measurements. For each of the four gas correlation channels, the GCETS accomplishes a separate, independent, demodulation of the V vac, V gas and R gas signals by means of circuitry identical to the GEA. The demodulation of V vac replicate the instrument and is intended for reference. The V gas and R gas circuits provide a comparison and represent signals which are not available through telemetry.

In operation, the GCETS can provide the input to any type of data system, measuring instrument or display unit. In general, phasing and alignments will employ oscilloscope displays; gain settings and balancing, employ meters; radiometric measurements, will require high-rate digital recording; and field-of-view measurements will utilize plotters.

2.3 Test Requirements Summary and Cross References

The testing requirements for the HALOE instrument and supporting systems have been documented in the HALOE Test Requirements Document, HALOE-13-054. In general the performance limits and tolerances reflect consideration for the science data while the environmental exposure levels generally reflect shuttle or spacecraft based considerations. The Integrated Test Plan responds directly to the test requirements. Table 2.3-1 summarizes the requirements for test and provides a cross reference to the tests which respond to the particular requirement.

The test requirements are identified by paragraph and title in the order presented in the Test Requirement Document. The cross references to this plan identifies the paragraph or paragraphs within the plan which describes the testing related to the requirement. In addition, the cross reference identifies the assembly level within the instrument as component, subsystems, integration, or assembled instrument. The comments column identifies any pertinent considerations for the test relative to the requirements. In general, the descriptions in this plan focus upon the generation of performance-related data.

TABLE 2.3-1. TEST REQUIREMENTS AND DESCRIPTION OF TESTS, CROSS REFERENCE

DEFINITION OF TEST REQUIREMENTS HALOE-13-054		TEST PLAN DESCRIPTIONS		
Paragraph	Title	Paragraphs	Configuration	Comment
Component Tests				
3.2.1	Adapter	4.7, 6.7, 6.9	Subsystem, Inst. Assembly	Structural by Analyses Grounding is Inspection
3.2.2	Blackbody	3.3.7, 3.5	Component	
3.2.3	Chopper Blade	3.2.3, 3.2.4	Component	
3.2.4	Detectors	3.3.3, 3.3.4, 3.3.5, 3.3.6, 3.5	Component	
3.2.5	Electronics Boards	4.2, 4.3	Subsystem	Performance Requirements
3.2 6	Electronics Piece Parts	3.2.1, 3.2.6, 3.2.7,3.5	Component	
3.2.7	Gas Cells	3.3.2, 3.5	Component	
3.2 8	Motors	3.2.3, 3.2.5, 3.4.4, 3.5	Component	
3.2.9	Optical Components	3.3.1, 3.5	Component	Filters
3.2.10	Thermal Control Surfaces	4.6, 6.7	Subsystem, Inst. Assembly	Thermal Vacuum Testing
Subassemblies				
3.3.1	Blackbody and Blackbody Temperature Controller	3.3.7	Component	
3.3.2	Calibration Wheel	3.2.5, 5.6	Component, Integration	
3.3.3	Chopper	3.2.4	Component	
3.3.4	Detectors, Pre-amps and TEC Controllers	3.3.4, 3.3.6 6.7	Component, Inst. Assembly	Thermal Vacuum
3.3.5	Gas Cells (mounted)	3.5		
3 3.6	Gimbal Motor, Motor Controller	3.4.4	Component	
3.3.7	Heaters and Heater Controllers	4.2, 6.7	Subsystem Inst. Assembly	Thermal Vacuum
3.3.8	Telescope/Sunsensor Subassembly	4.6, 4.8	Subsystem	Thermal Vaccum, Vibration
3.3.9	Thermal Subassembly	4.6, 6.10	Subsystem Inst. Assemblies	Thermal Vacuum
3.4 Subsystems				
3.4.1	Biaxial Gimbal Assembly (BGA)	3.4.4, 4.4, 4.5, 4.7 5.10, 6, all	Component Subsystem, Inst. Assembly	
3.4.2	Electronics	4.3, 3.5, 5.5, 5 11, 6, all	Subsystem, Inst. Assembly	
3.4.3	Optics	5.2 thru 5.9 inclusive	Integration	
3.4.4	Sunsensor	3.4.1, 3.4.2, 3.4.3, 3.5	Component	

TABLE 2 3-1. TEST REQUIREMENTS AND DESCRIPTION OF TESTS, CROSS REFERENCE (CONT'D)

DEFINITION OF TEST REQUIREMENTS HALOE-13-054		TEST PLAN DESCRIPTIONS		
Paragraph	Title	Paragraphs	Configuration	Comment
3.5 Integrated Subsystems				
3.5 1	Broadband Radiometer Performance	5.2, 5.4, thru 5.9 incl.	Integration	
3.5.2	Gas-Filter Correlation (GFC) Radiometer Performance	5.3, 5.4, thru 5.9 incl.	Integration	
3.5.3	Radiometric Performance and Characterization	5.7 to 5.9	Integration Inst. Assembly	
3.5.4	Pointer-Tracker Performance	4.4, 4.5	Subsystem	
3.6 Instrument Level	Acceptance Tests	5.2 thru 6.8	Inst. Assembly	
3.7 Instrument Level	Interface and Envelope Tests	Later		
3.8 Instrument Level	Environmental Tests			
3.8.1	Electromagnetic Compatibility	6.3	Inst. Assembly	
3.8.2	Pressure Decay/Increase		Pressure Decay by Analysis	
3.8.3	Shock	6.6		
3.8.4	Shuttle Payload Dynamics Load	Analysis 6.5	Inst. Assembly	By Analysis
3.8.5	Structural Loads	Analysis		
3.8.6	Thermal and Thermal Vacuum	6.7	Inst. Assembly	
3.9 Ground Support Equipment (GSE)				
3 9.1	Contamination	Separate Plan		
3.9.2	Instrument Electronics Test Set (IETS)	4.2, 4.3 5.5 thru 5.11 incl. 6.0, all	Subsystem Integration Inst. Assembly	IETS Tests With Instrument
3.9.3	Instrument Interface Simulation Unit (IISU)	Later		
3.9.4	Miscellaneous GSE	Later		
3.9.5	Portable-Radiation Stimulus Test Set (P-RSTS)			
3.9.6	Radiation Stimulus Test Set (RSTS)	5.6, 5.7, 5.9 6.2, 6.8	Integration Inst. Assembly	Test with IETS and and Instrument

2.4 Test Implementation and Control

The organization of the HALOE Project (see figure 2.4-1) provides a manager for testing who has responsibilities for the definition, coordination, and overall implementation of all tests required for flight acceptance and demonstration of performance. The general flow of test related events appears outlined in figure 2.4-2. The considerations and supporting functions are described below.

2.4.1 Role of the Testing Manager

The Test Manager has the overall responsibility for definition, coordination, and implementation of the HALOE test program. He is responsible for generating this Integrated Test Plan which describes all tests for flight acceptance and demonstrations that performance requirements are met at all levels including components, subsystems, and system. He is responsible for identifying all test facilities and test equipment to perform these tests. He is responsible for implementing a system for effective coordination of the overall effort. He will rely on subsystem managers and personnel most familiar with the hardware to prepare test procedures and conduct the test, although he may perform these functions. He is responsible for coordinating data interpretation and documentation of results. He is also responsible for test planning during instrument refurbishment and UARS integration. He is responsible for reporting testing status to the HALOE Project Manager and recommending plans of action where problems exist. He makes recommendations to the Project Manager for assignment of key personnel for detailed test preparation, conducting the test, and analyzing results.

2.4.2 General Format for Description of Tests

This test plan is a compilation of test ideas that have existed since the HALOE program began. Testing is described in a format that allows

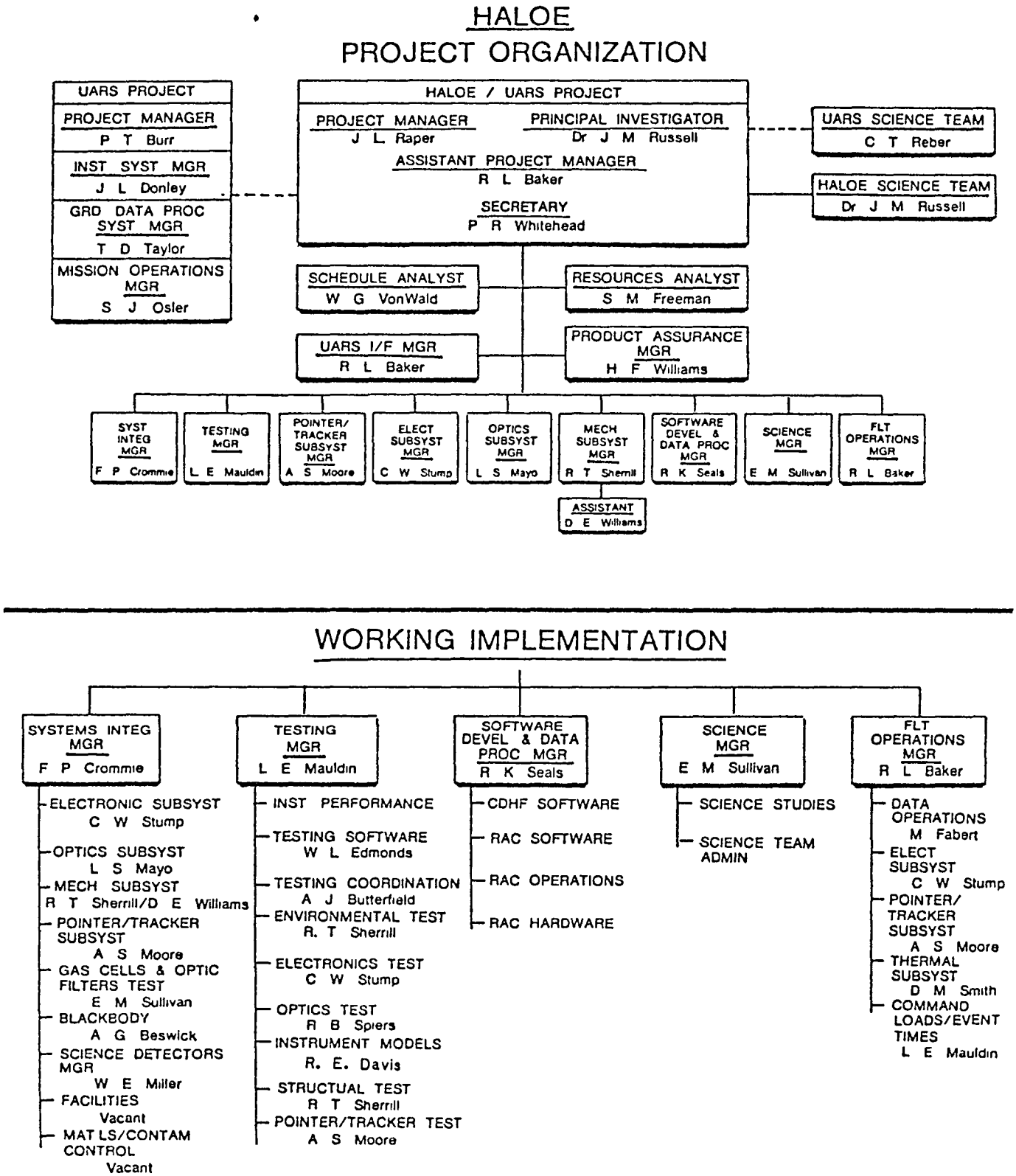

Figure 2.4-1, HALOE Project Organization

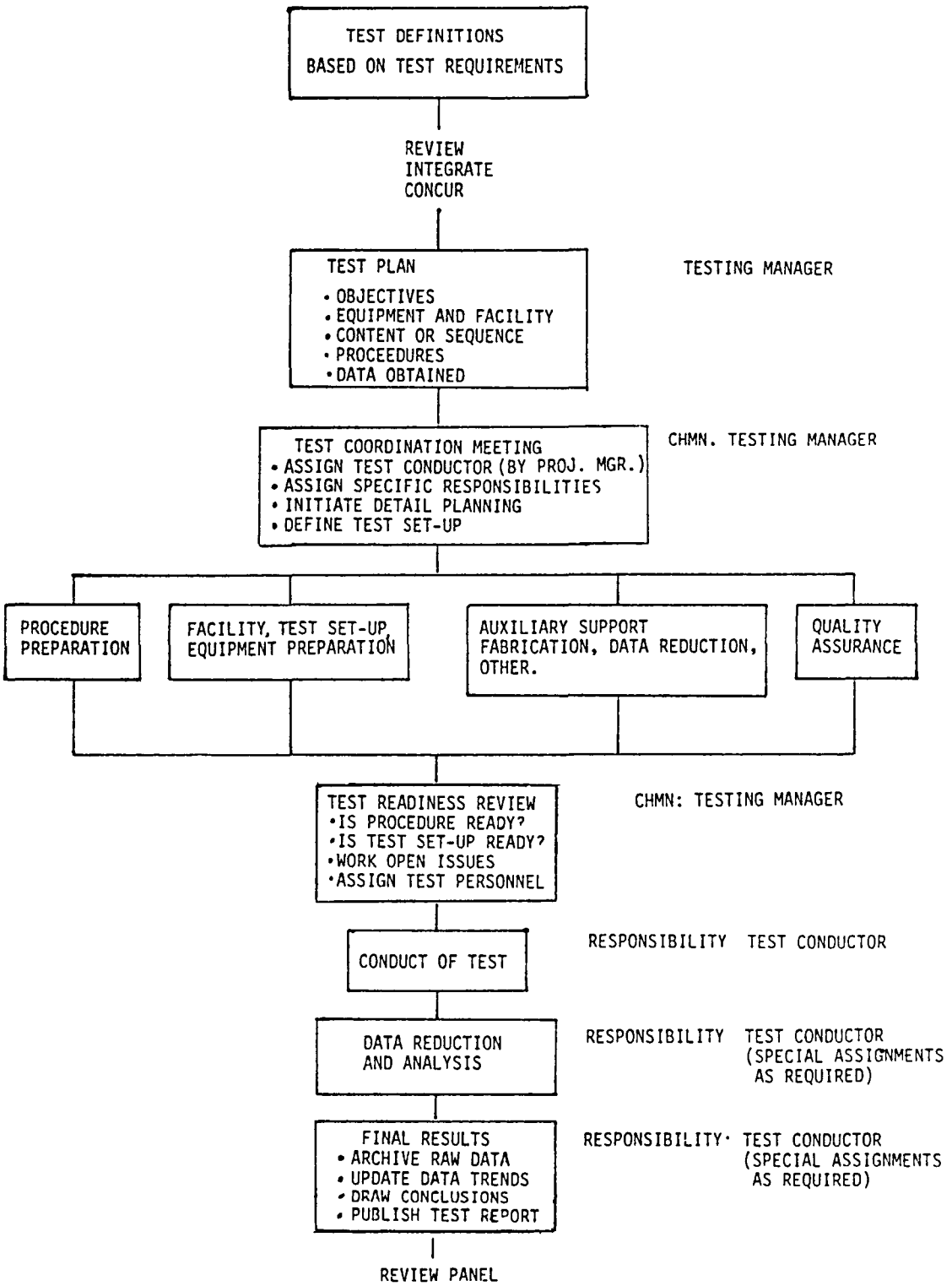

Figure 2.4-2, Flow of Test Related Events

easy preparation of a detailed test procedure. In general, this plan outlines all major considerations in the procedure. These are:

A. Objective: A concise statement that addresses all test requirements.

B. Test Facilities and Equipment: Major facilities and test equipment are identified.

C. Test Approach: A brief outline of how test is implemented.

D. Test Procedure: A brief statement outlining the expected detail and formality contained in the procedure.

E. Results: Expected data retained for documentation.

2.4.3 Test Coordination Meeting

The Test Coordination Meeting will be called by the Testing Manager to initiate detailed preparation for a particular test. The agenda for the meeting appears as figure 2.4.3-1. As the agenda topics are discussed, all open issues will be assigned to key test personnel and documented on the agenda forms and attached Action Item List. At this time, generally, the Test Conductor will be assigned. The Test Conductor will probably be the person most intimately involved with the test and the detailed test procedure. The Test Conductor will be responsible for preparing for and conducting the test and analyzing test data. The Testing Manager will maintain the Action Item List and follow-up on all open issues until these are resolved. A one page summary of the test will be prepared at the time of the Test Coordination Meeting by the Test Conductor.

2.4.4 Role of Test Conductor

A Test Conductor will be assigned by the Project Manager for each test. The timing of the assignment will reflect the needs of the project and the degree of advanced preparation associated with the test. The Test

TEST COORDINATION MEETING ( ); TEST READINESS REVIEW ( ) DATE _____

TEST _____

TEST CONDUCTOR _____

	RESPON. PERSON	PRESENT STATUS	PLAN TO COMPLETE
TEST REQUIREMENTS			
TEST PROCEDURE			
FLIGHT HARDWARE			
TEST SETUP DEVELOPMENT			
FIXTURES, JIGS			
FACILITY			
TEST EQUIPMENT			
CABLES			
DATA SYSTEM			
DATA SYSTEM SOFTWARE			
DATA PROCESSING SOFTWARE			
SAFETY			
TEST PERSONNEL			

Figure 2.4.3-1, Agenda Topics For The Test Coordination Meeting

Conductor will be the single point of contact for all activities, actions, plans, status, etc. related to a particular test. Specifically the Test Conductor will:

1. Design a test setup for measuring critical parameters that can be related to the test requirements.
2. Provide the necessary analyses of the test setup design and proposed test equipment to assure the accuracies or precisions meet requirements.
3. Write or direct the preparation of the test procedure.
4. Direct all preparations for test implementation.
5. Identify and obtain the needed test equipment.
6. Coordinate with the Testing Manager for the Test Readiness Review (See 2.4.6 Below).
7. Conduct or direct actual test operation.
8. Review the in-progress test results with Testing Manager and/or others as appropriate to decide upon the corrective action in the event of test anomalies.
9. Analyze the test measurements to ensure that objectives have been fulfilled and that the required performance from the instrument has been demonstrated.
10. Prepare or direct the preparation of the test report.
11. Identify and lead the test team.
12. In concert with the Project Manager, define the work-shift hours and notify personnel.

2.4.5 Test Control Documentation, Procedures

All HALOE instrument testing will be controlled by procedures with the level of detail and degree of documentation balanced against the complexity of the test. Tests at the component level can use informal procedures; however, tests involving interacting components will require formal procedures documented in accordance with Project requirements for numbering, technical reviews and sign-off concurrence. Inter-disciplinary testing can require a hierarchy of multiple procedures to provide the overall objective. Figure 2.4.5-1 shows the cover page for a formal HALOE procedure. The content of the individual test procedures will include:

A. Scope: A statement of the general content and context relative to the HALOE Project. This section also defines the configuration of the flight test article.

B. Objectives: The specific objectives in terms of results to be obtained from measurements, demonstrations, or exposures to environments (with a cross-reference to test requirements).

C. Supporting Documentation: A listing of source or contributing documents considered prerequisites to the test.

D. Resources: A listing of manpower required in terms of skills or disciplines.

E. Test Equipment and Configuration: A detail listing of test equipment including computer software, facilities, and fixtures.

F. Test Sequence, Description of Operations: A detailed step-by-step sequence to perform a test that accomplishes test objectives. This will include provisions for sign off by the Test Conductor and Quality Assurance representative that the test was performed.

TEST PROCEDURE

HALOE PROJECT

TITLE

DATE PREPARED

DATE REVISED

PREPARED BY: _____ DATE

TEST CONDUCTOR: _____ DATE

CONCURRENCE SIGNATURES:

SUBSYSTEM/COMPONENT MANAGER/ENGINEER (AS APPLICABLE) DATE	MECHANICAL SUBSYSTEM MANAGER (AS APPLICABLE) DATE
PRODUCT ASSURANCE MANAGER DATE	OPTICS SUBSYSTEM MANAGER (AS APPLICABLE) DATE
SYSTEMS PERFORMANCE ENGINEER DATE	ELECTRONICS SUBSYSTEM MANAGER (AS APPLICABLE) DATE
F. P. CROMMIE SYSTEMS INTEGRATION ENGINEER DATE	L. E. MAULDIN TESTING MANAGER DATE

Figure 2.4.5-1, Cover Page for a HALOE Test Procedure

G. Safety and Hazards: A description of conditions which present a hazard to test personnel and the measures employed to counter that hazard, (e.g., electrical shock, cold, heat, radiation, etc.).

H. Data and Results: Data processing requirements necessary to convert raw data to performance data that can be related to specific test requirements.

I. Success Criteria, Error Budget: A statement of the test setup measurement accuracy. In cases where more than one measurement contributes to the final result, the accuracy of each contributing measurement will be given and, an overall error assessment will be made.

Each procedure will be prepared in a manner which most effectively accommodates the implementation of the specific test addressed. Procedures will include any necessary drawings, diagrams, flow charts, or data sheets considered pertinent to the test. Appendices may be included which provide supporting data as circuit diagrams, computer printouts, etc.

2.4.6 Test Readiness Review

Prior to the test, the Testing Manager, with concurrence of the Test Conductor, will hold a Test Readiness Review. This review, which will follow the same agenda as in figure 2.4.3-1, will be held when all issues on the Action Item List have either been closed or have a well defined and timely plan for completion. If open issues remain, these will be assigned to key personnel on the Action Item List. A test procedure, which addresses all the test requirements discussed at the Test Coordination Meeting, will be distributed by the Test Conductor prior to the Test Readiness Review. The Test Readiness Review will address the same items as the Test Coordination

Review but with a different emphasis. Figure 2.4.6-1 shows the comparison for the agenda topics.

2.4.7 Test Data Analysis

Raw test data will be converted using appropriate analyses to a form that can be compared to the test requirements or part/subsystem/system specification. The converted data will be given with an error band that includes the accuracies and precisions in measuring the raw data and accuracy of the data inversion process. The data analysis will draw conclusions as to whether each test requirement/objective was realized and whether the test was adequate for this purpose. This will include a detailed analysis with conclusions drawn from each test anomaly. The data analysis will be performed in a timely manner to minimize the lag time from test completion to conclusions drawn.

2.4.8 Test Reports

The Test Conductor shall prepare, or direct the preparation of, Test Reports for each test. Figure 2.4.8-1 shows the cover page for a formal HALOE Test Report. Test Reports will have HALOE documentation numbers and include a cross reference to the Test Procedure. The objectives of the Test Report are as follows:

1. Summarize the test objectives and test procedures.
2. Locate all of the data, including test equipment calibration data, required for the data analysis in one location and establish where that location is.
3. Describe the test data obtained.
4. Discuss a "first look" analysis of the data.
5. Describe any pending data analysis.

COMPARISON OF AGENDA TOPICS FROM
TEST COORDINATION MEETING TO TEST READINESS REVIEW

	TEST COORDINATION MEETING	TEST READINESS REVIEW
TEST REQUIREMENTS	WHAT ARE THEY?	ARE THEY IN PROCEDURE?
TEST PROCEDURE	WHO OUTLINES? WHO WRITES?	FINISHED, PUBLICATION STATUS
FLIGHT HARDWARE	WHAT IS STATUS? CONFIGURATION?	IS IT READY? CONFIGURATION IDENTIFIED
TEST SETUP DEVELOPMENT	WHAT IS NEEDED?	IS IT READY? CHECKED OUT
FIXTURES, JIGS	WHATS NEEDED/WHO DEFINES/WHO DESIGNS?	ARE THEY READY/CLEANED/CHECKED OUT?
FACILITY	FACILITY? MODIFICATIONS NEEDED?	IS FACILITY READY, CHECKED OUT?
TEST EQUIPMENT	PRELIMINARY LIST, WHERE TO GET, ETC.	READY, CLEANED, CALIBRATED
CABLES	PRELIMINARY LIST, ASSIGN RES.	READY, CHECKED OUT, CLEANED
DATA SYSTEM	REQUIREMENTS, ASSIGN RES.	READY, CLEANED, CHECKED OUT
DATA SYSTEM SOFTWARE	REQUIREMENTS, ASSIGN RES.	READY/CHKED OUT/TEST CONDUC. FAMILIAR
DATA PROCESSING SOFTWARE	REQUIREMENTS, ASSIGN RES.	READY/CHKED OUT/TEST CONDUC. FAMILIAR
SAFETY	REQUIREMENTS, ASSIGN RES.	SAFETY APPROVAL
TEST PERSONNEL	REQUIREMENTS, ASSIGN RES.	ASSIGNED AND AVAILABLE, O/T REQUEST?

Figure 2.4.6-1, Agenda Comparison For Test Coordination and Test Readiness Review

TEST REPORT

Ref. Procedure:

HALOE-

HALOE PROJECT

TITLE

DATE PREPARED

DATE REVISED

PREPARED BY: _____ DATE

TEST CONDUCTOR: _____ DATE

CONCURRENCE SIGNATURES:

SUBSYSTEM/COMPONENT MANAGER/ENGINEER (AS APPLICABLE) DATE

MECHANICAL SUBSYSTEM MANAGER (AS APPLICABLE) DATE

(OTHERS AS APPLICABLE) DATE

OPTICS SUBSYSTEM MANAGER (AS APPLICABLE) DATE

(OTHERS AS APPLICABLE) DATE

ELECTRONICS SUBSYSTEM MANAGER (AS APPLICABLE) DATE

DATE
SYSTEMS PERFORMANCE ENGINEER

L. E. MAULDIN DATE
TESTING MANAGER

Figure 2.4.8-1, Cover Page for a HALOE Test Report

6. Determine the current status of the instrument. Specifically, document any changes to the instrument as part of the test sequence or any changes to the instrument due to the results of the test.
7. Conclude whether the test objectives were fulfilled or not.
8. Document authorized tests or retests not performed in accordance with the approved procedures.
9. Identify articles removed or replaced during the test.
10. Describe all nonconformances and failures which occur during the test.

To meet these objectives, the Test Report shall either contain or identify the custodian and location of the following information as applicable.

a. As-run test procedure
b. Measured data, disc file identification, magnetic tape identification, strip chart recordings, plots, tables, etc., of the raw data for the instrument as appropriate and, if appropriate, for the test equipment.
c. Calibration data and characterization data for test equipment whose output is required to interpret/analyze the data
d. Summary of the data analysis technique
e. Analyzed data
f. Summary and interpretation of the test results
g. Status or articles and materials
h. Evidence of inspection and tests performed

Analyses and documentation of follow-up activities, such as post-test equipment calibrations and detailed data analysis, will be included in the test documentation as revisions to the test report.

2.5 Quality Assurance Support

The testing of the HALOE instrument will receive support from the Quality Assurance operation in accordance with the provisions defined by the Product Assurance Plan, HA-11-001C. The Quality Assurance representative will have the general assignment of inspecting all flight-hardware and maintaining the documentation for all flight systems. The particular activities of Quality Assurance personnel to support testing will include:

A. Concurrences with Test Procedures: The designated representative from the quality organization will participate in the Test Readiness Review and provide signature concurrence on all procedure documents.

B. Test Witness and Data Verification: A representative designated by the Quality Assurance Organization will be present during tests involving flight items. By signature (or appropriate notation) he will witness compliance with the procedure and verify the data has been validly obtained from the test configuration defined and approved for that test.

C. Nonconformance and Failure Reports: The quality assurance representative will be responsible for the documentation and close-out of actions resulting from anomalies, non-conformances, or failures.

D. End Item Data Package: The Quality Assurance operation will have the responsibility for compiling and validating the data package which will accompany the instrument to show readiness for flight.

3.0 COMPONENT TESTING

3.1 General Considerations

Component level testing for the HALOE instrument may be necessary for component screening, flight qualification, life evaluation, performance characterization, and/or performance verification.

The descriptions of component testing have been grouped as electronic, radiometric, and pointer-tracker. The two major instrument electronic subassemblies (GEA and PEA) and the IETS ground support equipment operate as a combined system and are described later (see 4.2 and 4.3). The flow for electronic components is shown in figure 3.1-1, and the pertinent features of the testing are summarized in Table 3.1-1. The flow for the radiometric component tests are shown in figure 3.1-2, and Table 3.1-2 summarizes the pertinent features of the testing. The flow of testing for the pointer-tracker subsystem is shown in figure 3.1-3 and Table 3.1-3 summarizes the pertinent features of the testing. Table 3.1-4 shows the planned approach to environmental verification testing.

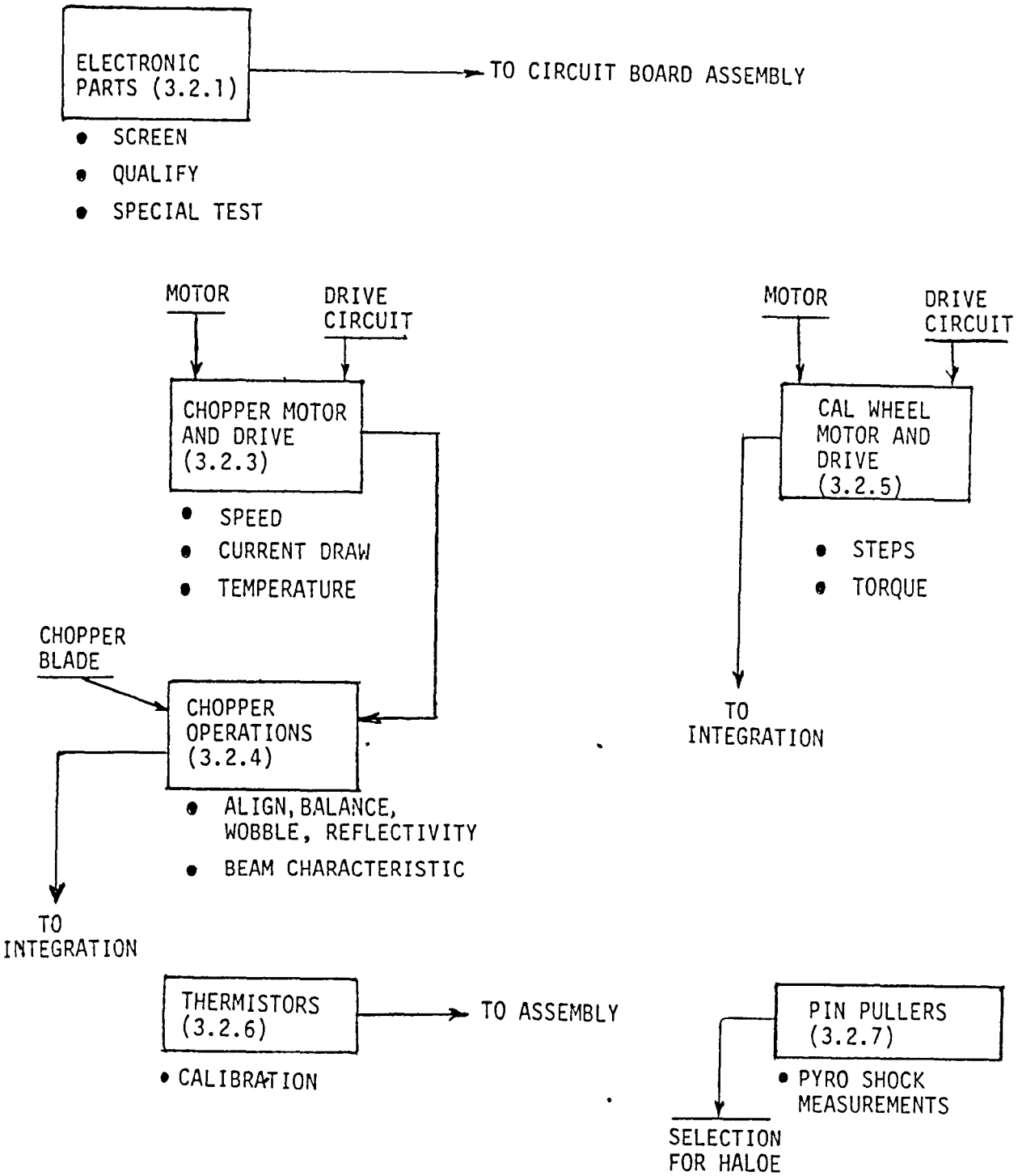

Figure 3.1-1, Testing for Parts and Electrical Components

TABLE 3.1-1. SUMMARY OF PERTINENT CONSIDERATIONS FOR PARTS AND ELECTRICAL COMPONENT TESTING

Concern \ Test	3.2.1 Parts	3.2.3 Chopper Motor	3.2.4 Chopper Characterization	3.2.5 Calibration Wheel	3.2.6 Thermistors	3.2.7 Pin Pullers
Test Configuration or Special Test Equipment	• Manufacturing or Test Labs	• Electronics Lab	• Chopper Blade Subcontractor Lab • Instrument	• Electronics Laboratory	• Electronics Laboratory	• Pyro Laborat • Shock Bar • Dynamic Test Model
Procedure or Control	• Mil Spec. • Mil Std.	• Lab Notes	• Lab Notes	• Lab Notes	• Lab Notes	• Test Plan • Test Procedu
Data for Record	• Electrical Functioning • Qualifications • DPA Results • Life Test Results	• Function	• Balance • Harmonic Content of Radiometric Signals • Wobble	• Function	• Calibration	• Transmitted Shock Pulses
Subsequent Test Utilization	Data for: • Board Population • Trouble-Shooting	• Speed • Avg. Current • Temp Rise	• System Operation	• System Operation	• Telemetry Input Simulation	• Instrument Pyro Shock Testing
Measurements Supporting Flight Data					• Voltage, Temperature Characteristics	

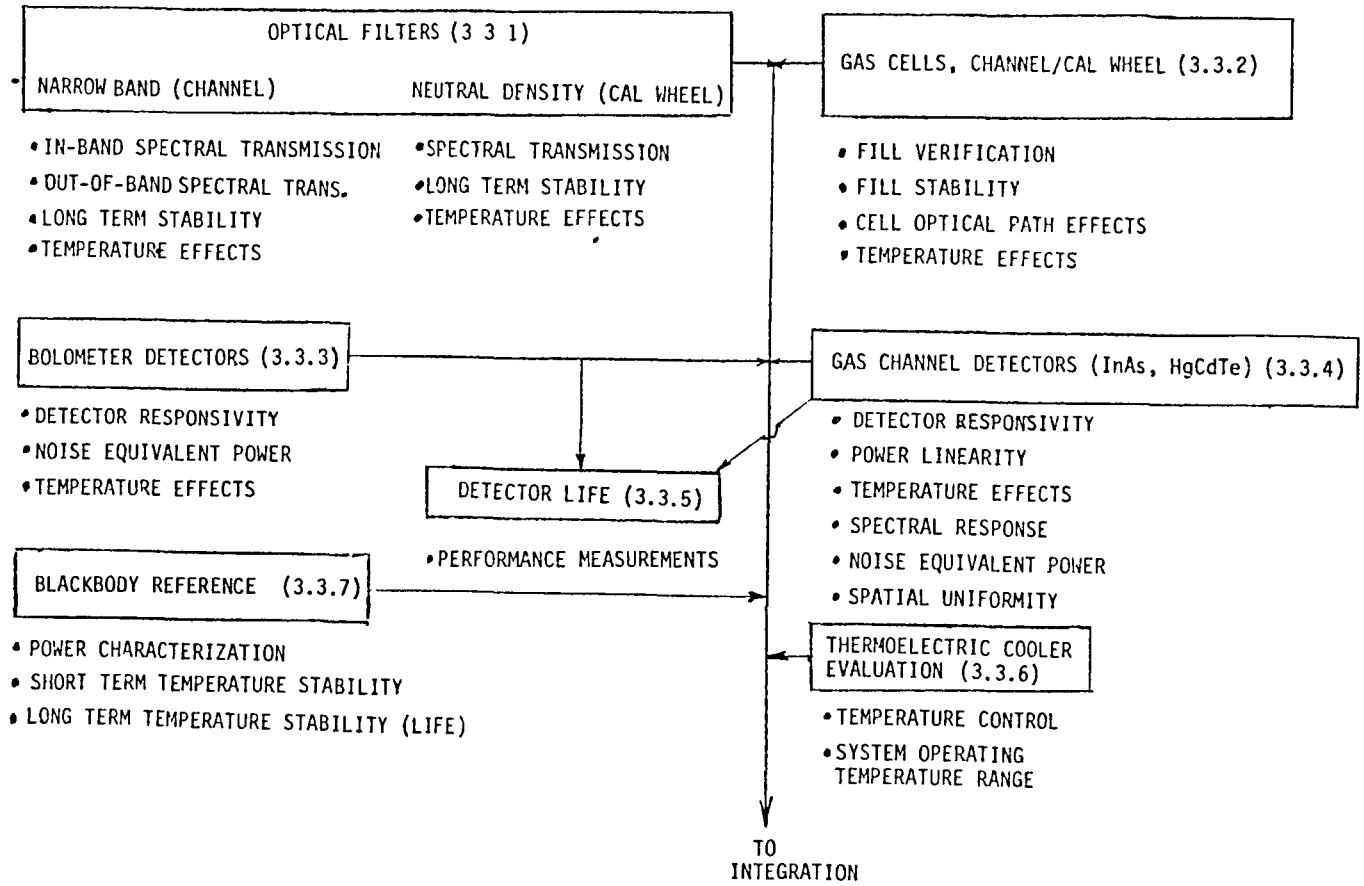
OPTICAL FILTERS (3 3 1)
NARROW BAND (CHANNEL)
NEUTRAL DENSITY (CAL WHEEL)
• IN-BAND SPECTRAL TRANSMISSION
• OUT-OF-BAND SPECTRAL TRANS.
• LONG TERM STABILITY
• TEMPERATURE EFFECTS
• SPECTRAL TRANSMISSION
• LONG TERM STABILITY
• TEMPERATURE EFFECTS
GAS CELLS, CHANNEL/CAL WHEEL (3.3.2)
• FILL VERIFICATION
• FILL STABILITY
• CELL OPTICAL PATH EFFECTS
• TEMPERATURE EFFECTS
BOLOMETER DETECTORS (3.3.3)
• DETECTOR RESPONSIVITY
• NOISE EQUIVALENT POWER
• TEMPERATURE EFFECTS
GAS CHANNEL DETECTORS (InAs, HgCdTe) (3.3.4)
• DETECTOR RESPONSIVITY
• POWER LINEARITY
• TEMPERATURE EFFECTS
• SPECTRAL RESPONSE
• NOISE EQUIVALENT POWER
• SPATIAL UNIFORMITY
DETECTOR LIFE (3.3.5)
• PERFORMANCE MEASUREMENTS
BLACKBODY REFERENCE (3.3.7)
• POWER CHARACTERIZATION
• SHORT TERM TEMPERATURE STABILITY
• LONG TERM TEMPERATURE STABILITY (LIFE)
THERMOELECTRIC COOLER EVALUATION (3.3.6)
• TEMPERATURE CONTROL
• SYSTEM OPERATING TEMPERATURE RANGE
TO INTEGRATION

TABLE 3.1-2. SUMMARY OF PERTINENT CONSIDERATIONS FOR RADIOMETRIC COMPONENT TESTING

Concern \ Test	3.3.1 Optical Filters	3.3.2 Gas Cells	3.3.3 Bolometers	3.3.4 Gas Channel Photo Detectors	3.3.5 Detector Life	3.3.6 TEC Heat Transfer	3.3.7 Blackbody
Test Configuration Special Test Equipment	• Laboratory • Nicolet FTIR	• Laboratory • Laser • FTIR	• Detector Test Set • Thermal Chamber	• Detector Test Set	• Detector Test Set	• Vacuum Bell Jar • Heat Transfer Plate	• Vacuum Chamber • Controllers
Procedure or Control	• Laboratory Procedures	• Laboratory Procedures	• Detail Test Procedures	• Detail Test Procedures	• Detail Test Procedures	• Detail Test Procedures	• Laboratory Notes and Detail Procedures
Data for Record	• Detail Spectral Characterization • Change with Time	• Detail Optical Characterization • Change with Time	• Calibration Response vs Radiation • Characterization	• Calibration Response vs Radiation • Characterization	• Changes in Performance	• Operating Margin	• Control of Temperature Short Term and Long Term
Subsequent Test Utilization	• In-band, Support for System Test	• Optical Path Effects; Installation	• System Integration	• System Integration	• Decision to Reprocure	• System Integration	• System Integration
Measurements Supporting Flight Data Reduction	• Out-of-band Transmission • Changes with Time • ND Spectral Resp. • In-band Spectral • Temperature Effects	• Fill • Changes with Time	• Full Range Response to Illumination	• Full Range Response to Illumination	• Change in Parameters		

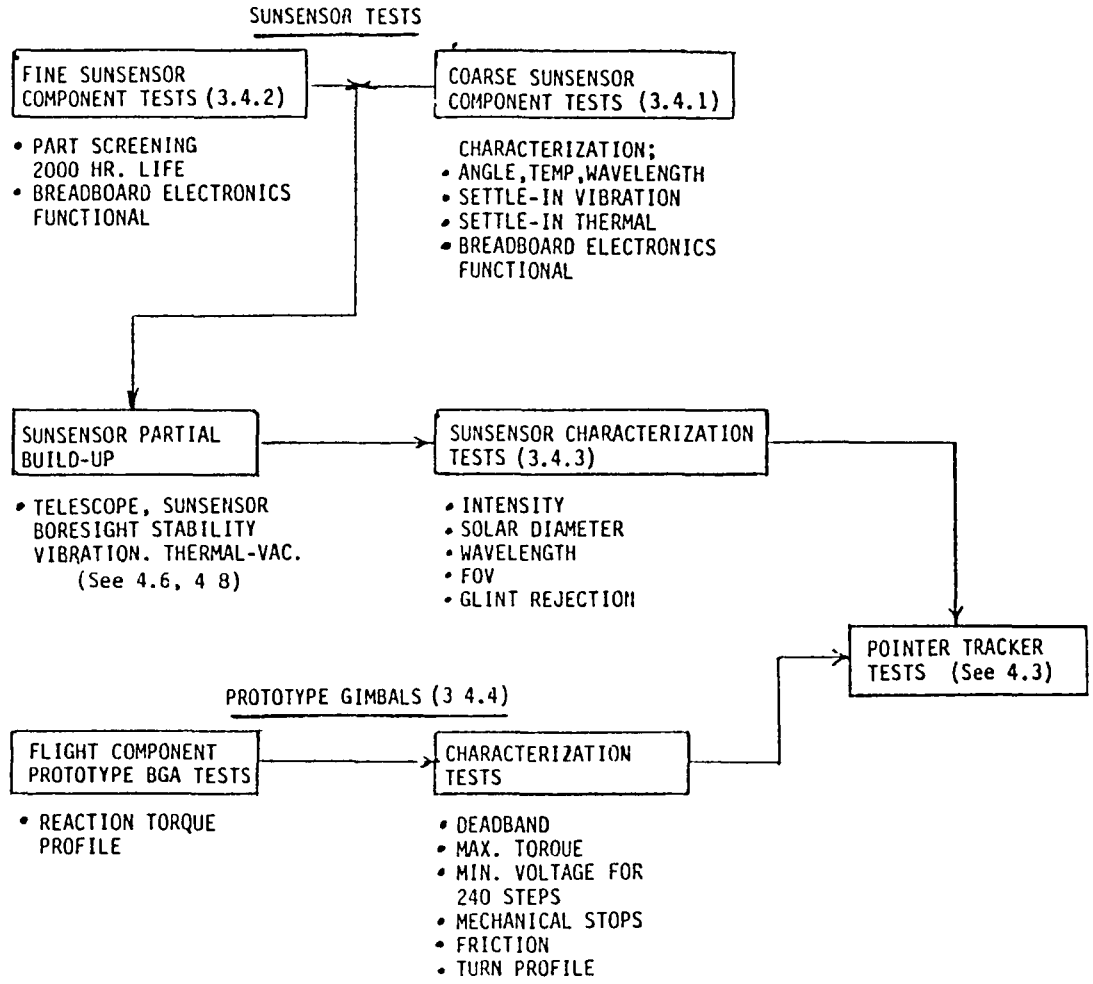

Figure 3.1-3, Testing for Pointer Tracker Components

TABLE 3.1-3. PERTINENT CONSIDERATIONS FOR POINTER-TRACKER COMPONENTS

Consideration \ Test	3.4.1 Coarse Sunsensor Characterization	3.4.2 Fine Sunsensor Life	3.4.3 Sunsensor Characterization	3.4.4 Prototype Gimbal Characterization
Test Configuration or Special Test Equipment	• Two Axis Mount • Small Clean Room • Vibration Facility	• Electronics Lab • Sun	• Two Axis Mount • Small Clean Room	• Gimbal Mount • Computer Control Drive System
Procedure or Control	• Special Test	• Special Test	• Special Test	• Special Test
Data for Record	Electrical Signals as a Function of Angle for • Illumination • Spectrum • Solar Disc	• Operating Life of 2000 Hours	Electrical Characterization • Angular Resp. • Illumination • Spectral Shift • Solar Disc • Solar Scan	Characterization for • Torque Required • Torque Margin • Dead Band • Solar Scan • Gimbal Stops

TABLE 3.1-4. ENVIRONMENTAL REQUIREMENTS AND MEANS FOR COMPLIANCE

Environment (Ref UARS Performance Assurance Document)		Means for Compliance
Par.	Title	
3.4.3	Structural Loads	Analyses and Tests according to Plan
3.4.4	Vibroacoustics	
	Random Vibration	Tests on components and assembled instruments
	Acoustics	Analysis (anticipates random vibration envelope of acoustic response)
3.4.5	Mechanical Shock	Test at instrument level to proto-flight conditions
	(Pyro Shock)	Multiple firings of pyro items during instrument acceptance
3.4.6	Life	Qualification tests on non-flight components or elements
3.4.7	Pressure Profile	Analysis
3.4.8	Mass Properties	Measurements on assembled instrument
3.5	Electromagnetic Compatibility	Test of instrument
3.5.4.5	Magnetic Properties	Measurements from instrument
3.6.4.1	Thermal Vacuum	Tests on instrument, subsystems, and components
3.6.4.2	Thermal Balance	Testing on instrument
3.6.4.3 3.6.4.4	Temperature Humidity	The instrument will not be allowed in an uncontrolled environment. Not-applicable
3.6.4.5	Contamination	Analysis based upon measurement from environmental monitors
3.6.4.6	Leakage	Test of sealed items
14.2	Space Radiation	Analysis for sensitive items

3.2 Electronic and Electrical Elements

3.2.1 Electronics Parts

Electronic parts screening tests on the individual items and qualification of the production lot provides the basis for assuring the integrity of the Instrument as an operating electrical unit. Microelectronic items (e.g. operational amplifiers, RAM's, PROM's, processors, etc.) perform most of the electrical functions; therefore, the testing and controls for producing microelectronic parts are the principal consideration. The acceptance criteria for utilization of any part type is a previous history of successful performance in space flight. At the individual part level a series of inspections, measurements, and tests are performed. These data are reenforced by qualification tests performed on a sister population to conditions which will exceed any instrument operating condition or environmental exposure.

A. Test Objectives and Data

Parts testing satisfies two particular requirements.

1. The individual parts have been produced in a manner which will assure performance over the range and duration of the HALOE mission.
2. Traceability data is available to support evaluation, troubleshooting, or failure analysis.

B. Equipment and Facilities

The manufacturer or a special test laboratory provides the particular test equipment and expertise necessary to perform the screening testing and qualification testing.

C. Test Contents

Electronic parts are tested to general military specifications for high reliability items. For microelectronics, MIL-38510 defines

the general requirements and MIL-STD-883C describes the applicable testing sequences and methods (e.g. levels and how applied). The HALOE Project achieved compliance with MIL-38510 by either procurement from completely tested lots or by appropriate supplemental testing of flight parts which did not show a completed set of certified data. Testing for HALOE parts includes the following:

1. Screening Tests. The general content of screening tests are shown summarized in Table 3.2.1.-1. These exposures stabilize the part or indicate infant mortality defects. The purpose of these tests is maintenance of the manufacturing process controls which assure the reliability of the delivered product. The limits on total failures in the production lot infer the rigorous process control of each step in the manufacturing process.
2. Qualification Testing. Qualification testing verifies the integrity of the total parts manufacturing process and, in addition, provides the assurance that the appropriate performance margins have been built into each item delivered. Qualification testing implies production which can be modeled statistcally. Test samples are from a "statistically significant" population. In general, qualification of a continuous production line requires periodic sampling. The alternative approach takes a sample population from an individual (e.g. the same as intended for use) production lot. For HALOE, the parts used represent populations drawn from either qualified lines or batches qualified for space

TABLE 3.2.1-1, Summary of Screening Test Requirements (Ref. MIL-STD-883C) For Class "S" Microelectronics

	TEST OR INSPECTION	LEVEL	PURPOSE, COMMENT
1.	Wafer Lot Acceptance	Dimensions and conditions of metalization by SEM.	Inspection on typical wafer(s) from a production lot, failure rejects all wafers.
2.	Nondestructive Bond Pull	Static load to 80 percent of ultimate required for wire size and material.	Verify lead bond integrity.
3.	Internal (pre-seal) Visual	Verify workmanship for the die, leads and internal cleanliness of the unit.	Acceptance criteria detailed and illustrated in MIL-STD Procedure.
4.	Stabilization Bake	24 hours at 150°C	Thermal relaxation stress relief.
5.	Temperature Cycling	10 cycles, 30 minutes each from -65°C to +150°C.	Thermal expansion effects, integrity.
6.	Acceleration	30,000g for 1 minute direction to lift die from case.	Lead and die attach integrity.
7.	External Visual	Evidence of failure	Reject for broken leads, loss of lids, die-bond failures.
8.	Particle Impact Noise Detection	Vibrate at 20g peak 40 to 250Hz, acoustic monitor for particles inside case.	Detect loose metallic material inside package less than 100% screen for mature process.
9.	Assign Serial Number for Part		Traceability requirement before electrical testing
10.	Initial Electrical	Base-line electrical performance	Data Retained
11.	Burn In	Operate 240 hours at 125°C min.	Electrical conditioning and "infant mortality"

TABLE 3.2.1-1, Summary of Screening Test Requirements (Ref. MIL-STD-883C) For Class "S" Microelectronics (concluded)

TEST OR INSPECTION	LEVEL	PURPOSE, COMMENT
12. High Temperature Reverse Bias (Test only for types considered sensitive)	72 hours at 150°C voltage impressed on junctions without electrical conduction	Junction integrity under electrical stress
13. Final (or interim) Electrical	Final electrical performance	Data retained and compared to 10 above
14. Seal Integrity	Fine leak by helium tracer or radio isotope, pressure in, vacuum out. Gross leak by fluorocarbon penetration, dye penetration, or weight gain. Pressure in, vacuum out.	Assure Hermetic seal, technique used is "most appropriate" for case utilized. Test is performed after lead forming operations.
15. Radiographic	View through the die and view parallel to plane of die bond.	Verify die location attachment and condition of internal leads.
16. External Visual	Evidence of damage	Verify final configuration including lead forming.

Acceptable loss rate for the entire process 5% total, not more than 3% allowed to fail electrical tests

application usage. The individual tests and inspections during part qualification can involve destructive analysis; thus, the testing is divided into groups and not all parts receive all the steps in each group. Table 3.2.1-2 summarizes typical qualification steps and begins with a population which has completed screening. The numbers assigned to partial populations will be representative to the total sample submitted for test. Additional testing steps can be included (or substituted) in the sequence. In each case they would represent conditions particular to the part configuration.

3. HALOE sponsored supplemental testing. Parts, selected for HALOE application which could not show complete test data received supplemental testing; Table, 3.2.1-3 lists those parts together with the tests performed. The HALOE application emphasizes operating life and construction integrity, and thereby sets the criteria for the supplemental test. The 160 hour burn-in and 2000 hour life qualification eliminate incipient failures and show long term stable operation. The destructive physical analysis assess the construction integrity in terms of cleanliness, lead bonds and attachment of dies. The other additional tests also address structural integrity, in particular, freedom from loose particles (PIND, Vibration, X-Ray)

D. Controls and Documentation

The details for each standard test are described in MIL-STD-883. Each manufacturer (or laboratory) constructs an individual procedure for performing the testing in compliance with the defined methods.

TABLE 3.2.1-2, Summary of Qualification Testing for Microcircuits

TEST OR INSPECTION	LEVEL	PURPOSE, COMMENT
Group A, Electrical Parameters		
Operate, Static, Dynamic, Switching, Function all Units. Maximum allowable Failures-2	Initial operations at 25°C; second operation at max temp; third operation at min. temp.	Show full operational capability of the part.
Group B, Environmental		
Temperature Cycling (all)	100 cycles, 30 minutes each	Structural integrity
Acceleration (all)	30,000g for 1 minute direction to lift die	Die attach, integrity
Seal (all)	Fine leak, helium tracer, or radioactive; pressure in, vacuum out. Gross leak, fluorocarbon or dye penetrant; pressure in, vacuum out.	Case integrity
Electrical Parameter (all)	Static operating at 25°C min. temp.; max. temp.	Electrical verification
Steady State Life (partial)	Operate 1000 hours at 125°C	Life capability, repeat electrical post test
Solderability (minimum 3)	Dip leads into molten solder at 245°C for 5 seconds; Inspect for solder coating.	Capability to withstand conditions during population of circuit board.
Lead Bend Fatigue (partial)	3 bend-unbend cycles of 90 degrees within 15 seconds; Verify by seal tests.	Lead form, part attachment
Solvent Resistance (partial)	Population divided into 4 goups each immersed in a solvent for 1 min.; brushed 10 strokes on masked area. Solvents are alcohols, trichloroethene, freon/methene chloride and water/butyl cellusolve/ monoethanolamine.	Identification integrity

TABLE 3.2.1-2, Summary of Qualification Testing for Microcircuits (concluded)

TEST OR INSPECTION	LEVEL	PURPOSE, COMMENT
Delid For Internal Visual (partial)	Inspect for evidence of damage	Internal structural integrity
Bond Pull (as above all)	Measure ultimate strength of lead bonds to die	Lead-bond integrity
Die Shear (as above all)	Force equal to twice shear spec. level or failure applied as a torque to the die.	Die bond integrity

TABLE 3.2.1-3 SUMMARY OF HALOE SPONSORED PARTS TESTING

MICRO ELECTRONIC PARTS	FUNCTION/ TYPE	MFR	SUPPLEMENTAL SCREEN (1)	DPA (2)	ADDITIONAL TESTS	QUALIFY FOR LIFE (3)
A. Digital Logic						
1 CD4001AK	NOR Gate	RCA	-	yes	PIND (4)	-
2 CD4008AK	Adder	RCA	yes	yes	Monitored Vibration (4)	-
3 CD4013BK	NAND Gate	RCA	yes	yes	-	-
4 CD4013BK	Flip Flop	RCA	yes	yes	-	-
5 CD4028AD	Decoder	RCA	yes	yes	PIND	-
6 CD4029AK	Counter	RCA	yes	yes	-	-
7 CD4029BD	Counter	RCA	yes	-	-	-
8 CD4030AK	OR Gate	RCA	yes	yes	-	-
9 CD4035AK	Shift Reg	RCA	-	yes	-	-
10 CD4040AD	Counter	RCA	yes	yes	Monitored Vibration	-
11 CD4041AD	Buffer	RCA	yes	yes	-	-
12 CD4042AD	Latch	RCA	yes	yes	-	-
13 CD4042BD	Latch	RCA	yes	yes	-	-
14 CD4063BK	Comparator	RCA	yes	yes	-	-
15 CD4076BD	Register	RCA	yes	yes	-	-
16 CD4093BD	Trigger	RCA	yes	yes	Electrical Parameter	-
17 CD4515BD	Decoder	RCA	yes	yes	PIND	yes
18 CDP1822D	Memory	RCA	yes	yes	Monitored Vibration	yes
19 HMMP1802	Processor	Hughes	yes	yes	-	-
B. Linear						
20 HA2-2700	Op Amp	Harris	yes	yes	-	-
21 LF155AH	Op Amp	NSC	yes	-	-	-
22 LM108AH	Op Amp	AD	yes	-	-	-
23 OP07AJ	Op Amp	PMI	yes	yes	-	-
24 AD534TH	Multiplier	AD	yes	yes	PIND, Temp Cycle, X-Ray	-
25 AD2701UD	Volt Ref	AD	yes	yes	PIND, Load Regulation	yes
26 LM119F	Comparator	AD	yes	yes	-	-
27 SG1524J	Regulator	Sil. Gen.	yes	yes	-	-
27 SG1627J	Drivers	Sil. Gen.	yes	yes	-	yes
C. Other						
28 AD7543	D/A Conv	AD	yes	yes	-	-
29 DAC100AC	D/A Conv	PMI	yes	yes	-	yes
30 DE303AL	Switch	Siliconix	yes	yes	-	-
31 DS0026	Clock Drive	NSC	yes	yes	-	yes
32 HI-1818A	Mux	Harris	yes	yes	-	-
33 HI-1828A	Mux	Harris	yes	yes	PIND	-
34 MN5204	A/D Conv	M. Net.	-	yes	Hermiticity	-
35 RL256G	Diode Array	Reticon	-	yes	-	yes
36 Hybrid Driver	Relay Driver	Teledyne	-	yes	-	-

(1) Burn-in 160 hrs at 125°C (or Maximum Defined Operating Temperature)

(2) Destructive Physical Analysis
a Delid and internal visual
b Bond Pull

(3) Operate 2000 hrs at 125°C (or Maximum Defined Operating Temperature)

(4) Tests designed to detect loose particles within the case

TABLE 3.2.1-3 SUMMARY OF HALOE SPONSORED PARTS TESTING (concluded)

DISCRETE PARTS	MFR	SCREEN	DPA	ADDITIONAL	LIFE	QUAL
D. Diodes						
37 IN752	(JANTXV)	yes	-	-	-	
38 IN759	"	yes	-	-	-	
39 IN961	"	yes	-	-	-	
40 IN3600	"	yes	-	-	-	
41 IN4574	"	yes	-	-	-	
42 IN4983	"	yes	-	-	-	
43 IN5811	"	yes	-	-	-	
44 UTX225	Unitrode	yes	yes	External Visual	-	
E. Transistors						
45 2N918	(JANTXV)	yes	-	-	-	
46 2N2484	"	yes	-	-	-	
47 2N7851	TI	-	yes	-	-	
48 2N5005	TI	-	yes	-	-	
49 2N5153	TI	-	yes	-	-	
50 2N5672	Solitron	-	yes	-	-	
51 LM19484	NSC	yes	yes	-	-	
F. Resistors						
52 300144C10K10K	Vishay	-	yes	-	yes	
53 300144C10K20K	Vishay	-	yes	-	yes	
54 AR90-716	TRW	yes	yes	-	yes	
G. Potentiometers						
55 1240P5K5	Vishay	yes	-	-	yes	
56 1240X-5K-5	Vishay	yes	-	-	yes	
57 Relays BR-20	Babcock	-	yes	-	-	

E. Data and Results

Screening data delivered with the parts are retained for support of circuit analysis or troubleshooting. Qualification records are generally retained by the manufacturer.

The results from testing address 126 electronic part types plus 23 magnetic items (transformers, cores, etc).

1. Screening: The HALOE sponsored screening related tests are summarized in Table 3.2.1-3 as burn-in, DPA and "ADDITIONAL." The remainder of the HALOE parts were obtained from lots screened to Military Specifications.

2. Qualification Tests: Table 3.2.1-3 identifies the parts which received 2000 hours operating life test. The remainder of the inventory showed:

   a. Seventy-one electronic parts from Military Qualified Parts Lists.

   b. Forty-three electronic parts from NASA preferred parts lists (GSFC, JPL) showing previous histories on projects such as Nimbus and Landsat.

   c. Twenty-three magnetic part types procured from TRW certified suppliers.

3.2.2 Electronic Circuit Board Testing

The testing of circuit boards for the HALOE Instrument represents a combination of component and subsystem level operations. The instrument electronic subsystem (GEA and PEA) and the ground support equipment (IETS) have an interdependence which effectively requires all three units working together. GEA, PEA, and IETS subsystem tests are described in sections 4.2

and 4.3. Motor and blackbody tests require replicas of flight circuit boards for their operation and control. In such cases the circuit board (or equivalent) is populated and functionally tested. These tests provide data which is used to either accept the configuration or define the necessary changes. Thus, the chopper motor, calibration wheel drive motor, gimbal drive motors, and the blackbody controller are tested with their respective electronic boards. The gimbal drive motor is also tested with a prototype gimbal (Section 3.4.4).

3.2.3 Chopper Motor and Drive Testing

A. Objectives

Objectives of the chopper motor/motor drive tests are to verify that:

1. The motor-driver combination operates stably at the intended speed.
2. The motor current telemetry monitor provides an input signal compatible with the multiplexer.
3. The operating temperatures for the motor are compatible with the anticipated thermal environment in the instrument.

B. Test Facility and Equipment

The tests will be performed in the electronics laboratory with power supplies, signal generators, oscilloscope, and meters as required. The unit tested will include:

1. A motor control circuit with clock and drive power inputs.
2. A 24 pole, two-phase synchronous motor configured for operation with 250Hz pulsed 28 volt DC power.

C. Tests

The tests will include:

1. Motor speed, motor temperature, and stability of motor speed over the operating temperature range.
2. Motor current and temperature telemetry monitor accuracy over the range of temperatures and voltages.

D. Procedures

These tests will be performed using laboratory notebook records for definition and recording of results.

E. Data for Record.

Measurements of the motor speed, current, and temperature.

3.2.4 Chopper Operating Characterization

A. Objectives

Objectives of the chopper subsystem (which includes the motor, drive electronics, and wheel) tests are:

1. To align and balance the chopper wheel to the motor shaft. The alignment data will define the angular wobble run-out of the reflected (radiometer) beam.
2. To measure the waveshape for the transmitted beams (150, 300Hz) and determine the harmonic content.

B. Test Facility and Equipment

Chopper alignment and balancing will be performed at the optical coating subcontractor's facility. The waveshape tests are performed in the HALOE clean room. The chopped beam will approximate the beam from the telescope and blackbody. The test setup consists of:

1. The chopper motors, wheel, and drive systems.
2. Balance rig which can detect unbalance to the 0.0001 oz.-inch limit.
3. Light source and detector for measuring wobble (angular displacement), and an IR source and detector to measure the transmitted wave.

C. Test Sequence

1. Alignment, Balance and Wobble. These operations proceed interactively. The alignment will center the motor shaft to the openings in the chopper wheel to a 0.0001 inch tolerance. The wheel will be aligned perpendicular to the axis of rotation (within the out-of-plane envelope of the wheel). Balance weights will be added until imbalance vibration is within 0.0001 oz.-inch. Wobble will be measured from each reflecting face.
2. Transmitted Waveshape and Harmonic Content. Beams which simulate inputs to the chopper from the telescope and internal blackbody will be used to measure transmitted waveshapes. The response from a photo-transistor detector will be recorded for each case and analyzed for harmonic content. A best-achievable symmetric wave will be obtained by careful metal removal at chopper openings (50-50 duty cycle).

D. Test Procedure

These test procedures and test results will be compiled in laboratory notebooks and laboratory reports from subcontractors.

E. Data for Record

1. Balance achieved.
2. Wobble measurements.
3. Harmonic content.

3.2.5 Calibration Wheel, Motor and Drive

A. Objectives

The testing of the drive system must show the capability to move the calibration wheel in 30 degree increments and return the wheel to the open "home" position. Additional test objectives are:

1. To verify software compatibility with step count and location.
2. To verify home position sensing.

B. Facilities and Equipment

The testing will be performed in the electronics laboratory using lab signal generators, digital input simulators, oscilloscopes, recorders, and motors as necessary. Test items include:

1. Motor drive circuit.
2. Stepper motor.

C. Test Operations

The test measurements will include:

1. Verification of count and stepping accuracy over the entire range of movements.
2. Verification of operation over the range of power supply voltage and circuit operating temperatures.

D. Test Procedure

These tests will be defined and results retained in laboratory notebooks.

E. Data for Record

Stepping accuracy as a function of temperature and voltage will be presented as average number of missteps per cycle.

3.2.6 Thermistor Calibration

A. Objective

Verify the resistance-temperature characteristics for thermistors.

B. Facilities and Equipment

These tests are performed in the calibration support laboratory with support from meters oscilloscopes, recorders, etc., as needed. The test installation includes:

1. Temperature controlled oil bath for thermistor immersion.
2. Thermistors and resistance bridge circuit for temperature measurement.
3. Recording of results.

C. Test Procedure

The thermistors are connected to their monitoring circuits and immersed in the oil bath. The temperature of the oil bath is adjusted in increments (nominal 20°F) to cover the range 0 to 160°F. Resistance measurements at equilibrium temperatures are compared with manufacturers data to confirm the temperature characteristic for the resistance.

D. Procedures

These data will be recorded in laboratory notebooks.

E. Data Retained

The resistance characteristics by part serial number.

3.2.7 Pin Pullers Evaluation

A. Objectives

Candidate Pin Pullers for application to the HALOE Instrument will be evaluated for:

1. Function as operation and retention of residual gases.
2. Shock levels generated as transmission through a steel bar and responses measured on the dynamic model.

B. Facilities and Equipment

The testing will be performed in the dynamics laboratory Building 1250, LaRC. Supporting equipment will include:

1. Shock transmittal bar (Hopkinson) for pyro testing.
2. HALOE Dynamic Test Model
3. Shock instrumentation, recording and analysis installation
4. Pyro Devices (6 Candidate Configurations)
5. Mass Spectrometer

C. Test Content Sequence

1. Shock transmittal measurements will be performed using the instrumented bar. Candidates will be ranked according to measured shock levels and pin retraction function.
2. Dynamic Model Tests. The candidates selected for further evaluation will be mounted on the Instrumented HALOE Dynamic Model for measurement of transmitted shocks. Candidates will receive a further ranking for function and shock levels transmitted.

3. The candidate selected for application will be fired under vacuum conditions in a mass spectrometer to measure retention of gases.

Final Selection will be based upon a review of all data.

D. Procedures

Testing will be performed according to a plan and procedures which comply with all safety regulations for pyro devices.

E. Data Retained

1. Shock Transmittal Records
2. Gas Retention Measurements
3. Evaluation and Selection Criteria

3.3 Radiometric Component Testing

3.3.1 Optical Filter Testing

A. Objectives

These tests measure spectral band-pass characteristics, out-of-band characteristics, and change in spectral transmission with both temperature and time for the band-pass filters. The neutral density filters will be measured for in-band spectral characteristics plus changes in transmission as functions of both temperature and time. Tests will:

1. Define the transmission as a function of wavelength across the IR spectrum transmitted through the telescope.
2. Make periodic measurements of the spectral in-band and out-of-band characteristics of the filters until the end of the flight experiment to identify changes or trends.

B. Facilities and Equipment

The testing will be accomplished with the Fourier Transform Interferometer (FTIR, Nicolet) facility located in Building 1250, LaRC. In addition to the FTIR, the testing will require filter holders and transport containers. These items must accommodate a flight filter mounted in the FTIR and must provide the capability for protecting the cleanliness of the filter during transit.

C. Test Content

The initial series of tests will cover the entire population of filters and witness samples. Subsequent tests will be performed at intervals to determine changes with time. These tests involve the installation of the filter (or witness

sample) into the FTIR under conditions of controlled cleanliness. The FTIR is programmed into the appropriate operating mode to perform the measurements.

1. Narrow Band Spectral Filter, In-band. The relative transmission is measured across the operating wavelengths for each of the 8 channels. Spectral resolution to 0.1 wave number, and transmission to 0.1 percent are measured.
2. Narrow Band Spectral Filter, Out-of-band. The out-of-band transmission characteristics will be measured to the accuracy limits of the experimental set-up. Total leakage will be characterized to 10^{-5} of peak transmission in-band (0.001 N_s where s = 4800°K for the in-band region).
3. Neutral density filters wideband. The relative transmission is measured across the germanium transmission range for the instrument (5600 to 454 cm^{-1}). Transmission over the range 5600 to 900 cm^{-1} will have a resolution of 0.1 wave number with transmission to 0.1 percent.
4. Filters of both types will be selected for testing at temperatures of approximately 40°F, 75°F and 90°F.

D. Procedures

These tests will be described and controlled by laboratory procedures for the measuring instrument.

E. Data Generated as Laboratory Reports

1. Science Channel narrow-band transmission fine structure. Measurements support flight data analysis and system level testing.

2. Science Channel filter out-of-band transmitted energy. Measurement to support flight data analysis.
3. Neutral density transmission fine structure. Measurements to support flight data analysis and system level testing.
4. Performance change with time. Periodic repeats of the tests on selected samples will be compared to identify changes in transmissions and need for adjustments in flight data analysis.
5. Performance changes with temperature. Measurements will identify spectral shifts or transmission levels as a function of temperature.

3.3.2 Gas Cell Testing

A. Objectives

The gas cell tests provide the following data.

1. Verification of the gas fill concentration.
2. Measurements of internal reflections and beam transmission effects for the cell windows.
3. Monitor of change to the gas fill over the life of the experiment.

B. Test Facility and Equipment

These tests are run with the FTIR, lasers, and fill station located in Building 1250, LaRC.

C. Test Content

Tests will involve both flight units and witness samples maintained for long term stability measurements.

1. Fill Verification: All cells are measured for fill conditions utilizing interferometric techniques. One cell

of each type (non-flight) receives a temperature characterization to determine percent change per degree F.

2. Transmission and Reflection Measurements: The transmission and reflection characteristics are measured by laser techniques. For the calibration cells, the reflection will be measured to within 5 percent. The transmission effects on the beam will be measured to 1 arc second for angle and 0.1 mm for lateral movement. The correlation cell will be measured for reflections and lateral displacements.

3. Life Testing: A set of 18 gas correlation cells will be fabricated and subjected to a matrix of tests. Testing will include thermal exposures, thermal cycling, and vacuum exposures. Each cell will receive periodic measurement for fill stability and temperature sensitivity. Table 3.3.2-1 lists the specific cells and tests. The monitor effort will continue throughout the life of the instrument.

D. Procedure

These tests will be performed in accordance with laboratory procedures developed for each specific instrument-measurement combination.

E. Data Retained

1. Gas cell fill measurements and temperature sensitivity will be retained for flight data inversion.

2. The transmission and reflection measurements will be retained to support flight data inversion.

3. Beam effect data will be evaluated to develop installation and alignment criteria.

TABLE 3.3.2-1, SUMMARY OF GAS CELL TESTING *

NO			CH_4			CH_4 (BLOCK)[a]			HCl			HF		
Cell S/N	p_t/χ (b)	Test (c)	Cell S/N	p_t/χ (b)	Test (c)	Cell S/N	p_t/χ (b)	Test (c)	Cell S/N	p_t/χ (b)	Test (c)	Cell S/N	p_t/χ (b)	Test (c)
20	0.1/0.1	A B C	11	0.8/1.0	E D	10	0.2/0.5	E D	10	0.1/0.1	E D	15	0.2/0.5	E D
21	0.1/0.1	A X B C	12	0.8/1.0	A D C X	13	0.2/0.5	A B	18	0.1/0.1	A X C X	16	0.2/0.5	A X D
22	0.1/0.1	B	25	0.8/1.0	B	14	0.2/0.5	A D C	19	0.1/0.1	A B D	17	0.2/0.5	A B C
23	0.1/0.1	E D	26	0.8/1.0	A B	18	0.2/0.5	A B C X	20	0.1/0.05	B	22	0.1/0.004	B
						27	0.2/0.5	B	21	0.05/0.01	A B C	23	0.05/0.008	A B C

[a]These cells are used to remove CH_4 interference from the HCl measurements.
[b]Nominal fill conditions: p_t = Total pressure in cell, atm; χ = Volume mixing ratio, diluent is N_2.
[c]Code: A - Heat to 85°C for 400 hours
B - Store under vacuum at room temperature
C - 2000 temperature cycles between 37°C and 7°C
D - Obtain spectra with cell at several temperatures between -15°C and 50°C
E - Store at room temperature and pressure
X - Test complete as of 12/31/81

*From NASA TM-84640

4. Fill stability measurements will be compared with initial values to determine need for modification to flight data inversion.

3.3.3 Radiometer Channel (Bolometer) Detector Testing

A. Objectives

The bolometer detectors for the radiometer channels will be characterized and detectors will be selected for each channel. The characterization measurements will define:

1. The flake resistance as a function of temperature and the thermal impedance of the flakes.
2. The dynamic thermal coupling of the flange to the flakes.
3. Responsitivity calibration at the principal wavelengths in the radiometer channels.
4. The noise equivalent power for each bolometer.

In addition, these tests will be selectively repeated to determine if there are any age effects (See. 3.3.5).

B. Test Facility and Equipment

These tests will be run on the detector test set facility located in Building 1202, LaRC. The test set facility has the built-in capability to mount, power, illuminate, monitor, and control test operations for the instrument bolometers and photovoltaic detectors. A small thermal chamber with a temperature controlled auxiliary plate will be used for resistance vs. temperature characterization.

C. Test Sequence

1. Flake Resistance and Thermal Impedance: These measurements are performed with the detectors mounted on an auxiliary

plate within a thermal chamber. The electrical resistance of each flake is measured directly as a function of temperature as the plate is allowed to decrease from a preselected value to 0°C. The preselected temperatures will be 40, 30, 25 and 10°C. The thermal impedance data are obtained from flake current measurements at 29 volts bias with the current measurements as a function of decreasing temperatures.

2. Dynamic temperature measurements were performed with the bolometer mounted in the test set with a thermistor attached to the mounting flange. The resistances of the flakes and the thermistor are measured dynamically as the unit receives a thermal input to raise the assembly temperature 0.2°C per minute over a 15 minute time period. Start points are 0, 20, and 40°C (Test one lot only).

3. Radiometric Calibration and Noise: The bolometer calibration is performed at 150Hz. The bolometers will be installed in the test-set and illuminated at wavelengths of 2.913, 6.035, and 9.5μm at temperatures of 0, 5, 10, 25, and 30°C and bias voltages of 28, 29, and 30 volts. The calibration will relate illumination intensity and resistance of the active flakes over the matrix of conditions. The initial series of measurements will be performed at 25°C and 29 volts. Selection for location will then permit completing the matrix at only one illumination wavelength for each bolometer. The measurements will include current measurements under conditions of zero illumination and output noise measurements from the preamplifier circuit. These data will be used to calculate the noise figure according to standard noise equations.

D. Procedures

These tests will be performed in accordance with detailed test procedures.

E. Data for Record

The following data will be provided as laboratory test reports.

1. Flake electrical resistance and thermal impedance as a function of temperature.
2. Dynamic thermal response as a function of initial temperature for the first set of bolometers.
3. Selection of a bolometer for each channel by specific serial number.
4. Response calibration curves for each channel selection.
5. Noise figure by serial number.

Measurements from subsequent testing will be compared with previous measurements to define long term stability, (See 3.3.5).

3.3.4 Gas Channel (Photovoltaic) Detector Testing

A. Objectives

Measurements on the photovoltaic detectors will calibrate the response as a function of illumination at 150Hz, characterize the power linearity and determine the spatial uniformity. The measurements will also characterize the quantum efficiency and noise.

B. Test Facility and Equipment

These tests will be performed on the detector test set facility in Building 1202, LaRC. For these tests the detector will have been permanently mounted in an evacuated dewar which contains a thermoelectric cooler (TEC) and the unit will function as a dedicated assembly for all test operations.

C. Test Sequence

Characterization measurements for the InAs detectors will be performed at wavelengths of 2.404 and 3.398μm. Characterization of the HgCdTe detectors will be performed at a wavelength of 5.26μm. These tests will be performed with the TEC units stabilized at nominal operating temperatures of 200°K for InAs, and 190°K for HgCdTe. The calibration will measure the output voltage as a function of radiance power (includes zero power). After detector channel selection, a supplemental characterization will be performed to include operation at temperatures other than nominal.

D. Procedures

Tests will be defined and controlled by a detailed test procedure.

E. Data Retained for Record by Serial Number and Presented as a Laboratory Report

1. Calibration of response as a function of illumination for 150Hz.
2. Quantum efficiency, power linearity, spatial uniformity, and noise.
3. Degraded performance characteristics.

3.3.5 Detector Life Evaluations

A. Objective

Provide performance data from the bolometers and photovoltaic detectors on a periodic basis to determine any changes with time.

B. Facility

Tests are performed in the detector test set facility, Building 1202, LaRC.

C. Test Content

Selected repeat of parameters measured during characterization tests (see 3.3.3 and 3.3.4).

D. Procedure

Repeat of previous tests using established procedures

E. Data for Record

Measurements of response characteristics such as change in flake resistance, change in voltage, inability to stabilize at temperatures, increase in noise, etc.

These continuing data will be utilized to determine the need for new items before flight. Post-flight measurements will support the interpretation of flight data.

3.3.6 Thermoelectric Cooler (TEC) Heat Transfer Validation

A. Objectives

Verify the thermal conductivity-heat rejection capability for the thermoelectric cooler units over the range of temperature operating conditions within the instrument.

B. Test Facility and Equipment

This test is conducted within a laboratory bell-jar vacuum chamber. Test equipment includes:

1. A detector dewar assembly including the thermoelectric cooler.
2. A spare instrument mount.
3. A heat exchanger, with temperature control by a recirculating liquid.
4. Power supplies, regulators and monitor instrumentation.

C. Test Operations

The test assembly and heat exchanger are mounted in the vacuum bell-jar and brought to initial operating conditions (10^{-5} Torr, 1.7°C). The TEC is energized and brought to the InAs operating point (200°K) and then thermal equilibrium is monitored. Thermal equilibrium is established and measurements recorded for heat exchanger temperatures of 18°C (65°F), 26°C (80°F), and 32°C (90°F). The capability to retain the 200°K temperature at the detector validates the heat transfer capability.

D. Procedure

The test is defined and controlled by a detailed test procedure.

E. Data for Record

Laboratory results showing TEC stable operation at all temperatures applied, up to 90°F.

3.3.7 Blackbody Characterization and Life Test

A. Objectives

The blackbody testing will provide data to determine:

1. The power requirements and regulation precision for the controller circuit.
2. The capability to maintain the temperature constant within 0.5°C over any 15 minute period.
3. The capability to control temperature within 1000 ±13.5°C for a period of 24 months.

B. Facilities and Equipment

These tests will be performed in the vacuum chamber located in Building 1230. The test related equipment becomes:

1. Instrument blackbody units (both developmental and qualification units).
2. Controllers (both laboratory type and the flight type).
3. Radiometer detector.
4. Measurement system for power, current thermistors, and temperatures.

C. Test Content

1. Blackbody Characterization Evaluations: These tests include a series of operations under vacuum conditions which will measure the electrical and thermal parameters of the blackbody and temperature controller. The parameters measured include voltage applied, current drawn, thermistor response, and temperature of the blackbody. These measurements will characterize blackbody temperature drift and controller temperature sensitivity.
2. Blackbody Stability: The blackbody will be operated steady-state in vacuum for periods of more than 100 hours to identify and drift effects.
3. Blackbody Life: A life test is run on the controller and a flight blackbody unit contained in a vacuum chamber to show compliance with both the event stability and long term stability requirements. Continuous controlled operation for a minimum of 24 months will demonstrate the stability needed for flight.

D. Procedure

Test procedures and test data will be contained in laboratory notebooks for the initial tests. The Life Test will be defined by a detailed test procedure.

E. Data for Record

1. Control parameter data for circuit evaluations.
2. Stability evaluation of the blackbody assembly.
3. Life test records.

3.4 Pointer-Tracker Component Level Testing

3.4.1 Coarse Sunsensor Characterization Tests

A. Objectives

Tests performed on the azimuth and elevation coarse sunsensor elements will:

1. Characterize the voltage as a function of angle for both on-axis and cross-axis illumination.
2. Measure the voltage sensitivity to changes in temperature, intensity, wavelength, solar diameter and vibration.
3. Establish the mechanical/electrical null offset.

B. Test Facilities and Equipment

The electrical and thermal testing will be performed in the small clean room laboratory, room 143, building 1202. The vibration testing will be performed in building 1250. Test equipment includes:

1. Coarse sunsensors, 4 units with flight type preamplifiers
2. Mounting fixture for illumination
3. Rotary table, 2 axis
4. Solar simulator (2.5 Kw)
5. Thermal cycle unit (Multicool)
6. Laboratory computer with printer, plotter, and data acquisition unit
7. Vibration fixtures

C. Test Content

1. Detector outputs will be characterized as a function of angle referenced to the detector front surface and include mapping the response both on axis and off axis. The two

null detector output voltages (A and B) together with the center detector voltages (C) will be recorded singly and in combinations (eg.A, B, C, A-B and $\frac{A-B}{C}$)

2. The measurements will be repeated using minus blue and minus blue/green filters to determine any wavelength effects.
3. The measurements will be repeated for operation with a solar disc of 0.25 nominal diameters.
4. The measurements will be repeated for operations at the extremes of orbital temperatures anticipated.
5. The sunsensors will be subjected to 10 orbital thermal cycles and vibrated to launch levels. Then, the characterization measurements will be repeated.

D. Procedures

The measurements will be defined by a special test procedure.

E. Data Retained

The measurements will be retained on computer disk for future reference.

3.4.2 Elevation Fine Sunsensor Functional Life Test

A. Objective

Verify a 2000 hour operating life capability for the elevation fine sunsensor.

B. Test Facility and Equipment

The tests are performed in the electronics laboratory. Test set up will include:

1. Reticon units R6256G/RC301 diode arrays and current amplifiers. A total of 5 will be tested with 3 drawn from

the flight lot (remainder from other lots selected for performance match).

2. Laboratory support includes an oscilloscope, camera, and power supply.

3. Sunsensor timing circuit board.

The test set up will use ambient illumination and neutral density filters such that the diode operation is at approximately 75 percent of saturation.

C. Test Control

The tests will operate at a scanning rate of 256KHz. For 3 units the scan will allow an 8ms integration period. For 2 units the scan will allow a 1ms integration period. The output of each unit will be measured and recorded weekly for:

1. Dark current (cover the reticons to complete darkness)
2. Unsaturated output
3. Unsaturated output (expanded scale)
4. Saturated output (lift the filter)
5. Saturated output (expanded scale)

No element of any Reticon may show more than a 25 percent change under any condition of illumination over the 2000 hour exposure.

D. Procedure

A special test procedure will control the operations

E. Data Retained

Oscilloscope records for each of the 5 cases compiled weekly for 2000 hours.

3.4.3 Sunsensor Characterization Tests

A. Objectives

The sunsensor characterization testing will provide the comprehensive set of data which defines the performance capability of the sensors and the associated electronics. The measurements will characterize on-axis and cross-axis outputs for coarse sunsensors and the elevation fine sunsensor. NOTE: Further sunsensor characterization tests are run after the sunsensor has been integrated to the pointer/tracker subsystem. See paragraph 4.4.

B. Test Facility and Equipment

The tests are performed in the small clean room facilities located in building 1202, LaRC. The test equipment consists of:

1. The flight sunsensor assembly with neutral density filter removed.
2. The sunsensor electronics (non-flight boards with circuit traces and part population the same as anticipated for the flight units).
3. Two-axis rotary tables (defined by drawing, LD-818677).
4. Laboratory equipment
   (a) alignment telescope
   (b) computer (HP9836C) with plotter, printer and data acquisition unit
   (c) Solar simulator (2.5Kw)

C. Test Content

1. Azimuth Characterization: Measure on-axis and cross-axis detector outputs as a function of angle referenced to the alignment cube. Detailed measurements will be performed near null and field-of-view cutoff. The axis of rotation will be about the center of the azimuth coarse sensor active element.

2. Elevation Characterization: The same sequence of tests are performed on the coarse elevation detectors, with axis of rotation about the center of the elevation coarse sensor active area.

3. Elevation Fine Sunsensor: Gimbal readings will be recorded at the toggling point of each element on the solar leading edge as the solar disc is scanned in elevation across the diode array. Rotation will be about the center of the fine sunsensor aperture.

D. Procedure

These tests will be defined and controlled by a special procedure (HA-06-040).

E. Data for Record

The results will be recorded on computer disc and consist of voltage measurements from the sunsensor as functions of angle.

3.4.4 BGA Flight Motor Tests

A. Objectives

Flight motors are mounted to the prototype BGA and tested to show:

1. Sufficient torque margin at each drive rate.
2. The dead band at motion reversals is within the limits for the pointing accuracy.
3. The solar scan movements as required are performed.
4. The mechanical steps perform as intended.
5. The voltage threshold for motion of the gimbal.

B. Equipment and Facility

The following equipment will be used for this test:

Prototype BGA

HALOE Pointer-Tracker Data console

HP 9845 Calculator

HP 85 Calculator

Collimator (UDT-1000)

Torque meter (SL-CST 16-1)

Load cell

C. Test Content

1. Friction: The torque measurements are obtained by driving each gimbal independently using the torque meter. The torque meter replaces the individual gimbal drive motor. The torque is continuously recorded as gimbals move in both directions.
2. Motor Maximum Torque: The gimbal drive motor moves the gimbals against an auxiliary load until stall. The stall torque delivered by the motor is determined (independently by a torque meter) and compared with requirements. Tests are performed in both directions on both gimbals.

3. Dead Band: The angular motion and positioning of the gimbals are measured against the steps of the motor during motion reversals. Tests are performed on both gimbals in both directions over the range of gimbal travel.
4. Scan Motion. The elevation gimbal is driven with a 2 step command in one direction and with a 4 step command in the opposite direction. The angular movement of the gimbal is measured independently and compared with the motor sequence.
5. Mechanical Stops: The gimbals will be driven into the mechanical stops and the torque-at-stall measured. The effects of stop position (if any) will be evaluated.
6. Minimum Voltage: The voltage applied to the drive motors will be increased from zero until motion begins. The voltage will be decreased from 28 volts until motion stops. The torque conditions for both cases will be determined.

D. Procedure

Testing will be controlled by a special test procedure.

E. Data Retained for Record

Computer records of all data will be retained.

3.5 ENVIRONMENTAL VERIFICATION TESTING

3.5.1 Concepts and General Conditions For Verification Testing

The HALOE Instrument delivered for integration into the UARS will comply with the GSFC defined requirements for environmental testing of Protoflight items. Table 3.1-4 outlines the overall approach to environmental verification. In addition, to satisfy LaRC concerns for Mission Assurance, those components or subassemblies considered critical to the generation of science data will receive additional environmental testing to the extent that the exposures may be considered an independent verification.

The environmental verification testing as qualification and acceptance of components will impose those conditions considered most critical to the successful operation of the instrument. The environments of particular concern are the launch vibration, the shocks transmitted from the spacecraft, the shocks generated internally from pyro-actuated devices, and the long term thermal/vacuum related effects of orbital operations. The levels of excitation and duration of exposures will be derived from the general interface specifications with particular levels (or durations) for each component adjusted to include localized effects such as structural resonances. To the maximum extent practical, the HALOE instrument was developed from components showing successful previous flight histories in long duration space missions. In general, such missions were launched from expendable boosters and, experienced harsher dynamic environments than those which occur in the payload bay of the shuttle. In each case, the selection of the item reflected a careful review of HALOE flight conditions weighed against the proven capability of the item to perform. While the change in

project responsibility may have truncated the historical documentation available, the validity of the original selection has not been altered and such items are considered validated by similarity.

For reference, the environmental validation for the HALOE instrument is presented as Table 3.5.1-1 using the matrix format suggested by the GSFC. The validation identifies all of the assemblies beginning with the instrument and continuing as components, assemblies, elements, etc. The validation of electronic parts and microelectronics (including large die items such as the fine sunsensor detector and RAM units) are included by reference to the earlier tables which addressed their particular and pertinent environmental testing conditions. The listing of validation environments includes the contents of Table 3.1-4 to indicate the details of application. The following paragraphs describe the test related considerations for each of those environments.

3.5.2 Structural Loads

The HALOE structural loads verification is being accomplished as described in the HALOE Structural Loads Verification Plan (HALOE-12-~~128~~ 127). Analysis augmented by degrees of structural load testing together with the results from vibration model tests are being utilized to satisfy the structural requirements defined by the UARS PARD (430-1702-001) and the GIIS (430-1601-003).

3.5.3 Random Vibration Testing

The HALOE instrument and all of the flight components will experience random vibration as a validation environment. Table 3.5.3-1 presents a summary of the random vibration testing for the instrument and the flight components. The listing of components includes the test

TABLE 3.5.1-1, ENVIRONMENTAL VERIFICATION SUMMARY FOR HALOE

ITEM \ VERIFICATION ENVIRONMENTS	QUALIFICATION															ACCEPTANCE							
TEXT SECTIONS	3 5 2	3 5 3	3.5 4	3 5 5	3 5 6	3 5.7	3 5 8	3 5 9	3.5 10	3.5 11	3 5 12	3 5 13	3.5.13	3 5.14	3 5.15	3 5.16	3 5 3	3 5.5	3 5 7	3 5 8	3.5 7	3 5.10	3 5 9	3 5 17
	Structural Loads	Random Vibration	Acoustics	Mechanical Shock	Pyro Shock	Thermal/Vacuum	Thermal Balance	Life	Leakage	Contamination	Space Radiation	EMC	Magnetics	Mass Properties	Pressure Profile	Temperature Humidity	Random Vibration	Mechanical Shock	Thermal/Vacuum	Thermal Balance	Thermal Cycle	Leakage	Run-in/Life	Calibration
1 Instrument Assembly	A	T	A	T	T	T	T	N	N	X	N	T	T	T	A	N	T	T	T	T	T	N	N	N
COMPONENT ASSEMBLIES																								
2 PEA	A	T	A	T	N	H	H	H	N	N	A	H	H	T	A	N	N	N	H	H	X	N	H	N
3. GEA	A	T	A	T	H	H	H	H	N	N	A	H	H	H	A	N	H	H	H	H	X	N	H	N
4 Sunsensor	A	H*	A	H	H	H	H*	H	N	X	A*	H	H	H	A	N	H	H	H	H	X	N	H	T
5 Preamplifiers	A	T	A	H	H	H	H	H	N	N	A	H	H	H	A	N	H	H	H	H	H	N	H	N
6 Sunsensor Electronics	A	H	A	H	H	H	H	H	N	N	A	H	H	H	A	N	H	H	H	H	X	N	H	N
7. Power Distribution Assy	A	H	A	H	H	H	H	H	N	N	A	H	H	H	N	N	H	H	H	H	H	N	H	N
8 Gimbal Assembly	T	H	A	H	H	H*	H*	H	N	N	A	H	H	H	A	N	H	H	H	H	H	N	H	N
ELECTRICALLY OPERATING																								
9 Blackbody	A	T	A	T	H	T	T	T	N	N	A	H	H	H	A	N	T	H	T	T	X	N	H	N
10 InAs Detectors	A	T	A	T	H	T	T	T	T	X	A	H	H	H	N	N	T	H	T	T	T	T	T	T
11 HgCdTe Detectors	A	T	A	T	H	T	T	T	T	X	A	H	H	H	N	N	T	H	T	T	T	T	T	T
12 Bolometer Detectors	A	T	A	H	H	T	T	T	T	X	A	H	H	H	N	N	T	H	T	T	T	T	T	T
13 Coarse Sunsensor Detctr	A	S	A	H	H	H	H	H	N	X	A	H	H	H	N	N	H*	H	H	H	H	N	H	T
14 Chopper Motor	A	S	A	H	H	S	H	S	N	N	N	H	H	H	N	N	T	H	H	H	H	H	T	N
15 Cal-Wheel Motor	A	S	A	H	H	S	H	S	N	N	N	H	H	H	N	N	H	H	H	H	H	N	T	N
16 Gimbal Motors	A	S	A	H	H	S	H	S	N	N	N	H	H	H	N	N	H	H	H	H	T	N	T	N
17 Gimbal Potentiometers	A	S	A	H	H	S	H	S	N	N	A	H	H	H	N	N	H	H	H	H	H	N	H	X
18. Thermistors	A	S	A	H	H	S	H	S	N	N	A	H	H	H	N	N	H	H	H	H	H	H	H	T
19 Heaters	A	S	A	H	H	S	H	S	N	N	A	H	H	H	N	N	H	H	H	H	H	N	H	N
20 Thermostats	A	S	A	H	H	S	H	S	N	N	A	H	H	H	N	N	H	H	H	H	H	N	H	H
MECHANICAL OR OPTICAL																								
21 Harmonic Drives	A	S	A	H	H	S	N	S	N	N	N	N	H	H	N	N	H	H	H	N	H	N	T	N
22 Bearings	A	S	A	H	H	S	N	S	N	N	N	N	H	H	N	N	H	H	H	N	H	N	H	N
23 Cable Wraps	A	S	A	H	H	S	N	T	N	N	N	H	H	H	N	N	H	H	H	N	H	N	H	N
24 Gas Correlation Cells	A	T	A	H	H	T	N	T	T	X	A	N	N	H	A	N	H	H	T	N	T	T	T	X
25 Calibration Cells	A	T	A	H	H	T	N	T	T	X	A	N	N	H	A	N	H	H	T	N	T	T	T	X
26 Optical Filters	A	H	A	H	H	H	N	T	N	X	A	N	N	H	N	N	H	H	H	H	H	N	H	X
27 Telescope	A	H*	A	H	H	H*	H*	H	N	X	A	H	H	H	A	N	H	H	H	H	H	N	H	N
PYRO DEVICES																								
28. Gimbal Pin Puller	A	S	A	H	T	S	H	S	T	N	A	H	H	H	A	N	H	H	H	H	H	T	H	N
29 Door Pin Puller	A	T	A	H	T	T	H	T	T	N	A	H	H	H	A	N	T	H	H	H	H	T	H	N
ELECTRONIC PARTS																								
30 Microelectronics etc (See 3 2 1)	T	N	N	H	H	T	T	T	T	N	A	H	H	H	N	N	H	H	H	H	T	T	T	N

VERIFICATION CODES

A, Analytical Verification
H, Tested as Part of HALOE Instrument
N, Not Exposed or Inert to this Environment
S, Similarity as Historic Data or Qualified Source
T, Tests on Individual Components or Elements
X, Test Method Developed for HALOE Items
* Supplemented by Other Tests or Actions, See Text

TABLE 3 5.3-1 RANDOM VIBRATION VERIFICATION SUMMARY FOR HALOE

TEST ITEM	QUAL TEST CODE	QUALIFICATION INPUT LEVELS OPTCL x grms	ELVTN y grms	AZMTH z grms	FLIGHT MARGIN	FAT INPUT LEVELS OPTCL x grms	ELVTN y grms	AZMTH z grms	DEFINED TEST LEVELS	COMMENTS
1. Instrument Assembly	T	3 92	3 92	3 92	1.4	2.80	2.80	2.80	GIIS Defined	FAT During Refurbishment
COMPONENT ASSEMBLIES										
2 PEA	T	12 1	12 1	16 94	1 4	-	-	-	GIIS Def "z" Perp Panel	Test During Refurbishment
3. GEA	T	4.23	8 62	4 59	1.75	2.415	4.927	2.62	7 0, 8 62, 7 0 For Qual.	Test During Refurbishment
4. Sunsensor	H*	3 431	9.275	4 596	1.4	2 45	6.625	3.28	7.26, 7 23, 7.28	Structural Test with Telescope
5. Preamplifiers	T	3 30	9.60	8 20	1.75	1.886	5 479	4.66	7 0, 9 6, 8 2	Qual and Sensitivity Eval
6. Sunsensor Electronics	H	3 431	9 275	4.596	1.4	2.45	6.625	3.28		Instrument Assembly Tests
7. Power Distribution Assy.	H	5 385	8 977	5 041	1 4	3 84	6.412	3 60		" " "
8. Gimbal Assembly	H	16 78	7 96	6 707	1.4	11.98	5 68	4.79		" " "
ELECTRICALLY OPERATING										
9. Blackbody	T	3 69	8 62	4 59	1.75	2.10	4.927	2.62	7.0 min Each Axis	Mounting Bracket Response Def.
10 InAs Detectors	T	6.73	11 22	8.57	1.75	3 846	6 41	4.66	16 Qual 12 FAT, 3 Axes	Axially Symmetric y = z
11 HgCdTe Detectors	T	"	"	"	1.75	"	"	"	" " "	" " "
12 Bolometer Detectors	T	"	"	"	1.75	"	"	"	12 FAT, 3 Axes	" " "
13. Coarse Sunsensor Detctr.	S	3 431	9 275	4 596	1.4	2.45	6 625	3 28	20 74,3 Axes, 7 09, 3 Axes	TDRSS Qual. and Stability Eval
14. Chopper Motor	S	2 95	6 898	3 668	1 4	2 10	4 927	2.62	20 7 Qual. 12 FAT, 3 Axes	Centaur Qualification
15 Cal-Wheel Motor	S	3 341	9 275	4 596	1.4	2.45	6.625	3 28	" " "	" "
16. Gimbal Motors	S	16 78	7 96	6 707	1.4	11 98	5.68	4.79	" " "	" "
17. Gimbal Potentiometers	S	"	"	"	1 4	"	"	"	20 Qual	Qualified Parts List Item
18. Thermistors	S	16 78	9 275	6 707	1 4	11.98	6.625	4.79	"	QPL Item, Many Locations
19. Heaters	S	"	"	"	1 4	"	"	"	"	" " " "
20 Thermostats	S	"	"	"	1 4	"	"	"	"	" " " "
MECHANICAL OR OPTICAL										
21 Harmonic Drives	S	16 78	7 96	6 707	1 4	11 98	5 68	4.79	20.7 Qual. 12 FAT, 3 Axes	Centaur Qualification
22. Bearings	S	"	"	"	1 4	"	"	"	" " "	" "
23 Cable Wraps	S	"	"	"	1 4	"	"	"	" " "	" "
24 Gas Correlation Cells	T	6 73	11 22	8 57	1 75	3.85	6 41	4 66	7, 11 22, 11 22, min Qual.	Consider as Symmetric, y = z
25 Calibration Cells	T	4 29	11 59	5 74	1 75	2 45	6 625	3 28	7 11 59, 11 59, min Qual.	" " " "
26 Optical Filters	H	5 385	9 275	6 525	1 4	3,85	6 625	4.66		Instrument Assembly Tests
27 Telescope	H*	3 43	9 275	4 596	1 4	2 45	6 625	3 28	7 26, 7 24, 7 28	Structural Test with Sunsensor
PYRO DEVICES										
28. Gimbal Pin Puller	S	16 78	7 96	6 707	1 4	11 98	5 68	4 79	35 Qual	Viking Project Item
29 Door Pin Puller	T	4 28	11 59	5 74	1 75	2 45	6 625	3 28	11 59 Qual 7 0 FAT	New Item

NOTE All HALOE Vibration Tests Are 60 Sec /Axis

code shown in the validation matrix. The test levels define the qualification and FAT input levels in terms of each individual axis; with the exception of the PEA, the axes relate to the instrument assembly. The levels defined for the items mounted in the instrument are based upon measurements obtained from the dynamic test model and are applied to the mounting brackets which actually hold or retain the item (e.g., the mainframe interface). The flight margin is the ratio between the qualification input levels and the FAT levels. Testing for components on the instrument will use a spectrum also based upon measurements from the dynamic test model. (Figure 3.5.3-1 illustrates and compares the random vibration spectrum conditions which apply to the instrument and component assemblies). The column listed as "Defined Test Levels" presents particular test data such as: the results from previous tests; the test levels defined in current procurement specifications; and historical data from previous applications. The "comments" column either identifies the source for the level or presents a pertinent consideration for the item. The table identifies five cases for random vibration validation of the HALOE instrument and its components.

A. Validation to Levels defined by GIIS Documentation: The assembled instrument (without the GEA) and the PEA unit will be tested to levels defined by interface documentation. The instrument without the GEA in place will have an initial exposure to qualification (protoflight) levels as part of the environmental test sequence. The instrument with the GEA in place will receive a FAT level test as part of the refurbishment cycle. The PEA as an independently mounted unit will receive vibration to the qualification (protoflight) levels

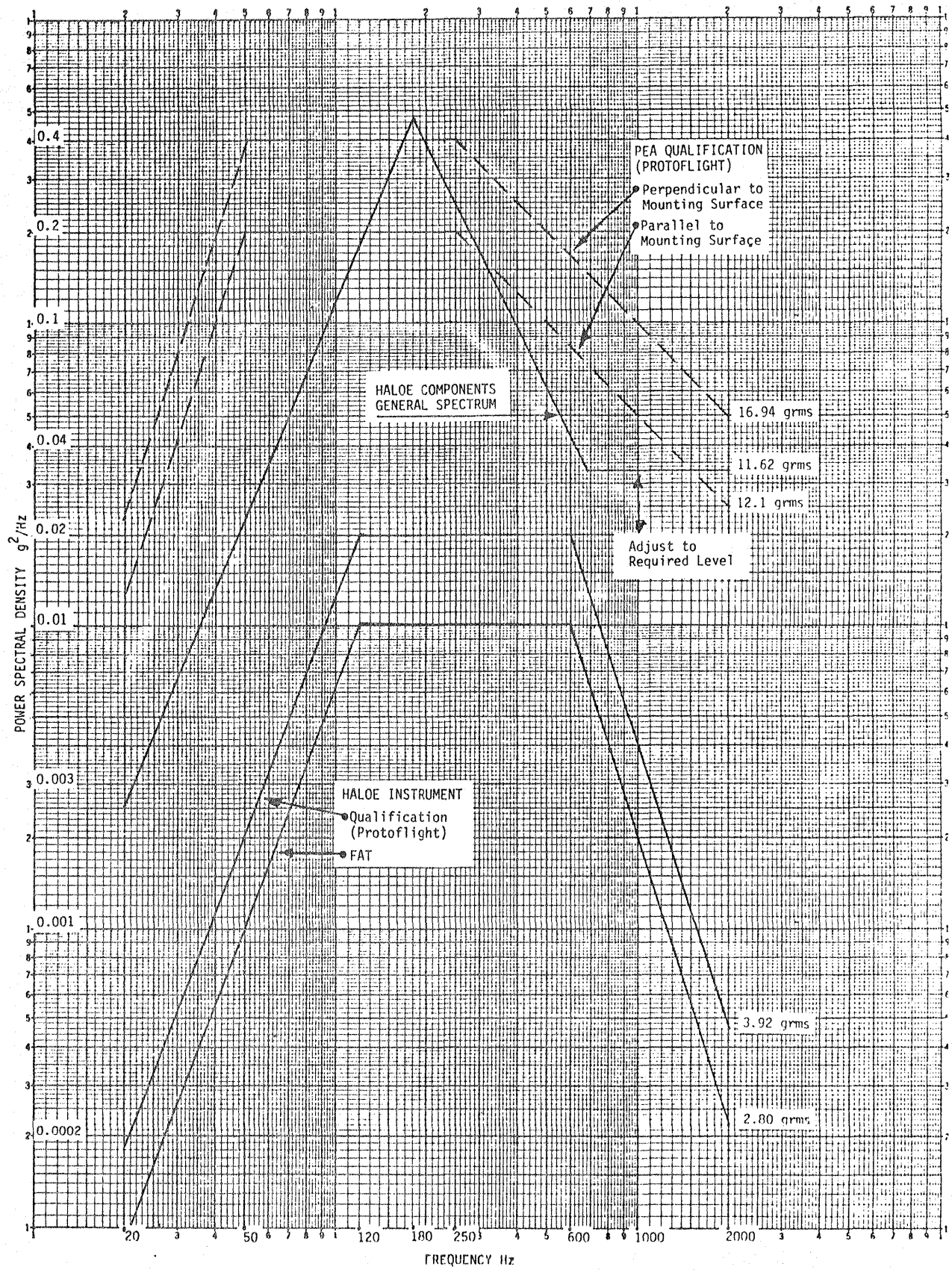

Figure 3.5.3-1, Summary of HALOE Random Vibration Environments

defined for such a unit. The potential for circuit changes will exist throughout the integration and environmental test sequence, therefore, the vibration test for qualification will occur during the refurbishment cycle for the instrument (e.g., all parts and devices with flight mountings, circuit boards have been conformally coated).

B. Components with independent validations: Component items which are subject to change-out at refurbishment or where the flight units are selected from a lot will receive vibration validation as separate items. The items are identified as "T" for qualification; and they include the GEA, the blackbody, the IR detectors, the gas cells, preamplifiers and one of the pyro devices. These items will be subjected to the higher margins for qualification levels and receive a minimum of 7.0 grms in any axis. For such items the test must address the dynamic responses of the mounting brackets. The individual tests will measure the response at the component; if the mounting structure does not bring the levels at the component to 7.0 grms, then the input will be adjusted upward to impose such a level. For lot-procured components such as the IR detectors and pin pullers, the qualification levels will apply to one unit, all other units in the lot will receive flight acceptance to 7.0 grms in each axis. One-of-a-kind components such as the GEA will receive qualification level testing as individual items and experience FAT as part of the refurbished instrument assembly. The preamplifier is a particular case, one unit will be qualification tested to show stability for

the potentiometer settings as well as component integrity, the remainder of the flight units will be tested as part of the instrument assembly during both of the instrument vibration tests.

C. Historical Data:

Component items with a previous history of successful long term flight operations in space or items from qualified series product lines (QPL) will cite similarity. The original selection of these items addressed such criteria, and the design has not been altered. Such items will receive random vibration as part of the instrument for both instrument qualification and instrument FAT.

D. Supplemental Tests To Support Validation:

Three cases of vibration testing for other purposes will contribute to validation. The evaluation of boresight stability involved a 3 axis random vibration of the mainframe-telescope-sunsensor subassembly. The force input was at the elevation-gimbal attachment to the mainframe with the control accelerometer on the telescope close to the root fitting. The levels selected were based upon analytical prediction. The assembly of optical elements was unaffected by that environment. The coarse sunsensor detectors received a "settle in" vibration at 7.09 grms without causing any shift in performance.

E. Components Validated as Part of the Instrument Assembly:

A total of 8 items were intended for qualification and acceptance as part of the instrument assembly, results from

additional testing applies to four of the items. The remaining four represent small rugged units and the gimbal assembly itself. The sunsensor electronics, power distribution assembly, and the optical filters are characterized by small-size, rugged construction and simple mountings. They are adequately tested as part of the instrument. The gimbal assembly requires the optical head assembly attached in order to experience a valid test. Therefore, the instrument assembly testing for qualification (protoflight) and acceptance will also validate the gimbal assembly.

3.5.4 Acoustics

The analyses for dynamic responses to the acoustic environment will use the measurements from the dynamic model. If any of the analyses predict a response which exceeds the random vibration environment, then that item will become a candidate for a random vibration test to levels which include both with the random vibration and acoustic excitation responses.

3.5.5 Mechanical Shock

The mechanical shock environment will be applied to the instrument as part of the initial environmental testing, and is intended to validate the entire assembly. The PEA and GEA will be shock tested as components at the time they move through the random vibration environment (shock tests are performed on the same electrodynamic shaker). The qualification units for the gas channel detectors will also receive mechanical shock at the same time they move through the random vibration environment.

3.5.6 Pyro Shock

The pyroshock environment will be applied to the instrument assembly by actual firing of live items. A minimum of 3 firing sequences will occur, (e.g. all 3 pyro locations expended at each sequence) during the initial environmental testing. A minimum of two firing sequences will occur as part of the refurbishment testing.

3.5.7 Thermal/Vacuum and Thermal Cycle

The validation for operation under thermal vacuum conditions involves the operations of the assembled environment plus supplemental testing of subassemblies components and circuit boards. The instrument will be exposed to a qualification exposure as part of the initial environmental testing and to an acceptance exposure as part of the refurbishment sequence. These tests will show the operating temperature margins and continue for the required operating periods; conditions are summarized in Table 3.5.7-1. Supplemental testing of subassemblies will be performed. The gimbal assembly will have a preliminary evaluation for operation which includes the motors, bearings, harmonic drives, cable wraps, potentiometers, heaters and thermostats. The optical head will experience the boresight stability exposure (described later, see 4.6) Component Qualification for the thermal vacuum environment will be performed on the HgCdTe and InAs detectors with temperature limits to show the margins required.

Acceptance testing to thermal and/or vacuum conditions will be performed for all detector units. Environments include extended vacuum bakes, power conditioning cycles, and settle-in thermal cycles. In particular the bolometers received 600 hours of power conditioning with 5 cycles of 2 hours dwells at 66°C and -23°C.

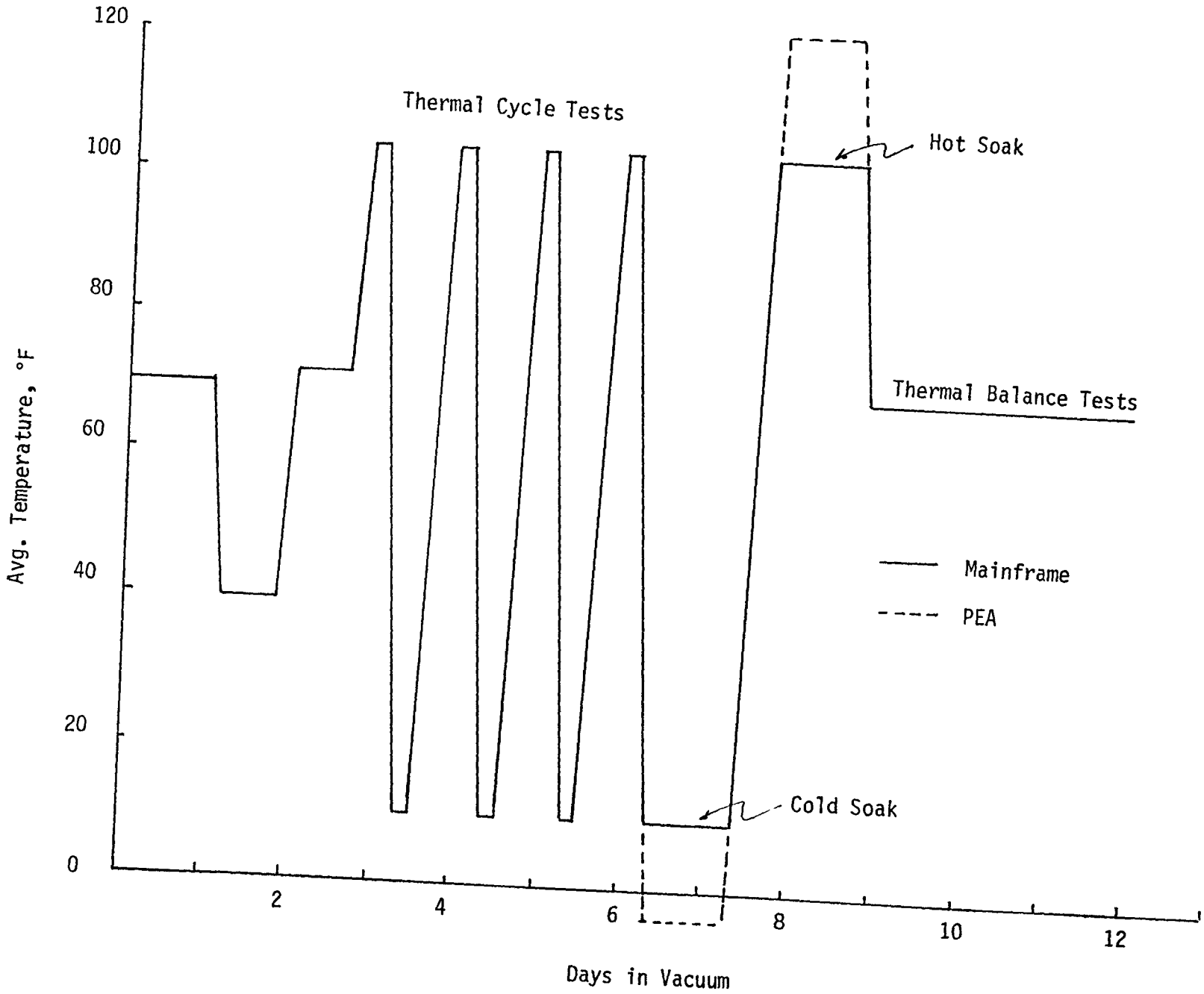

TABLE 3.5.7-1. Thermal Vacuum Test Conditions

The blackbody represents a special case in which all operating measurements are obtained in a vacuum environment. The qualification exposure for the blackbody is described separately in 3.3.7 in terms of life exposure. The acceptance testing of the flight units will include up to 10 on-off cycles to verify stability.

Thermal cycle validation testing will be performed on the individual circuit boards which make up the PEA and GEA assemblies. These tests will be conducted in air and show the 10°C margin for operations (the tests are described later, see section 4.3).

The components and items cited for qualification by similarity include the motors, potentiometers, thermistors, heaters, and mechanical drive elements and all had a history of previously successful flight operations. As an example, the gimbal motors and harmonic drives were flown in the solar array drive for the Navy Fleet Satcom satellite. Typical qualification values were:

Random qualification, 20.7 grms (Centaur or equivalent)

Pyro and mechanical shock

Thermal vacuum, 0°F to 130°F

Design life, 14 years

The principal consideration which permits usage of these items is the maturity of the design. The moving elements in the instrument assembly employ materials, lubricants, and mechanisms which have been successfully flown in space. For HALOE acceptance, these items do receive cycling, burn-in, and run-in for significant periods of time (see Life 3.5.9 below).

Cleanliness considerations impose thermal environmental conditions during assembly which can exceed the operating temperatures

encountered in space. While the minimum cleaning is an alcohol wipe, the standard method involves solvent immersion, followed by a vacuum bake. Typically, bakes at 140°F and 10^{-5} Torr for up to 72 hours are used. Such requirements are effective screens for workmanship type defects. This coupled with appropriate burn-in or functional testing provide the necessary confidence for flight acceptance of components with established histories of performance in space.

3.5.8 Thermal Balance

The thermal model validation tests for the telescope-sunsensor-mainframe combination are described later (see section 4.6). Thermal model verification for the assembled instrument will be part of the thermal vacuum testing exposures.

The PEA and blackbody are two special cases. The remote mounting of the PEA requires a separate thermal model. This will also be verified during the thermal/vacuum tests. Because of heat transfer from the blackbody, thermal balance determination requires special measurements which are performed during the blackbody life test (see 3.3.7)

3.5.9 Life Testing and Acceptance Run In

Life testing for extended periods is being performed on those components where changes could alter instrument radiometric performance. These tests have been described earlier as:

1. Optical filters, Section 3.3.1
2. Gas cells, Section 3.3.2
3. Detectors, Section 3.3.5
4. Blackbody, Section 3.3.7

In addition, the cable wraps received a 2000 cycle life evaluation performed at one cycle (wrap-unwrap) per minute.

The acceptance sequence for critical components with previous testing in space includes the following exposures and operations.

Chopper motors, 12 grms vibration plus 168 hrs run-in

Calwheel motors, Run in 8 hrs at 25°C

Gimbal motors, 10 cycles 10°F to 160°F with 2 hr dwells plus 50 hrs run-in in each direction.

Harmonic drive, 8 hrs run-in

3.5.10 Leakage

Hermeticity tests are required for the InAs, HgCdTe, and thermistor bolometer detectors plus the gas cells and pyro devices. The detectors use the Helium leak detection technique. A 100 hour soak at atmospheric pressure is followed by an immersion in vacuum. Leakage is detected by a He mass spectrometer (limits are 10^{-6} standard cc/sec). Leakage for the gas cells is determined by use of the Fourier Transform Interfrometer which detects change in the fill condition of the cells (See 3.3.2). Leakage for pyros measures the retention of gases after firing. Tests involve firings in mass spectrometers and monitor for emission products.

3.5.11 Contamination

Contaminant degradation of optical elements and thermal control surfaces represent a continuing concern for the HALOE instrument. The requirements and actions to maintain cleanliness are defined in the Contamination/Cleanliness Control Plan Document, HA-13-003B. Practical considerations dictate that the instrument remain under cleanliness control until the time of launch. The analyses for

contamination effects will include measurements from witness plates which will follow the instrument together with and an assessment of contaminants and their potential effects due to outgassing from the spacecraft and the shuttle.

3.5.12 Space Radiation

The components and the elements used for the HALOE instrument were analyzed for sensitivity to the space radiation environment defined within the GIIS 430-1601-003, (Rev. C). A total of three micro-electronic dies indicated a possible sensitivity and to assure reliability received additional shielding. For the microprocessor and the random access memory dies, the additional shielding was included at the case package. For the fine sunsensor reticon linear array, the additional shielding was added to the cover and by adjustment of the viewing window.

3.5.13 EMC/Magnetics

These environments and measurements will be performed as part of the instrument environmental sequence before refurbishment. The testing is described later (see 6.3 and 6.4)

3.5.14 Mass Properties

The measurements of mass properties will be performed on the instrument assembly and the PEA as separate items. These measurements will be performed as part of the initial environmental test sequence before refurbishment (see 6.6).

3.5.15 Pressure Profile

A venting analysis will be performed to show no more than an 0.05 psi differential when subjected to a pressure decay of 0.8 psia/sec. All cavities within the instrument and electronic boxes

which vent through orifices will be analyzed. If necessary, the orifice size will be increased to provide the necessary margin.

3.5.16 Temperature Humidity

Temperature cycling under humidity conditions involving condensation cannot be allowed for the HALOE Instrument. The condensing of water on the optical surfaces will degrade performance (e.g., render unacceptable). The design and operating approach to the protection of the optics is aimed at the prevention of any condensates on optical surfaces and utilizes heaters for thermal control. The instrument will be protected against the condensing of moisture throughout the ground test and launch sequence.

3.5.17 Calibration

Calibration is not an environment per se, however, a total of eight items require calibration in terms of an applied environment. The calibration requirements are described elsewhere in this plan. For reference, they include:

Item	Description Section
Sunsensor	3.4.3
Blackbody	3.3.7
InAs-HgCdTe Detectors	3.3.4
Bolometers	3.3.3
Gimbal Potentiometers	4.4
Thermistors	3.2.6
Gas Cells	3.3.2
Optical Filters	3.3.1

4.0 SUBSYSTEM TESTING

4.1 General Considerations

The subsystem testing for the HALOE instrument provides the necessary bridge between component evaluation and system integration.

The electronics subsystem, which is the build-up of individual circuit boards, provides all command functions, power conditioning, internal control, signal conditioning, and data handling for the instrument. An engineering model electronics subsystem (spread system) which is electrically equivalent to the flight electronics subsystem, is used for acceptance testing of flight circuit boards.

The pointer/tracker subsystem testing will demonstrate HALOE capability to properly acquire, scan, and track the sun. The initial testing, which is done on a prototype BGA provides the facility for acceptance tests on the flight gimbals and sunsensors.

Finally, a series of environmental tests are described for thermal and structural subsystems. The thermal and structural dynamic tests are used for component and subsystem qualification, and for thermal and structural model validation. These models are then used to predict telescope/sunsensor boresight stability under HALOE operating orbital environments. The dynamic testing also provides the assurance for successful operation after exposure to the vibrational environments associated with launch and delivery to orbit.

The flows for the electrical subsystem testing and the pointer/tracker testing appear as figures 4.1-1 and 4.1-2 respectively. Table 4.1-1 summarizes the pertinent consideration relative to all of the subsystem testing.

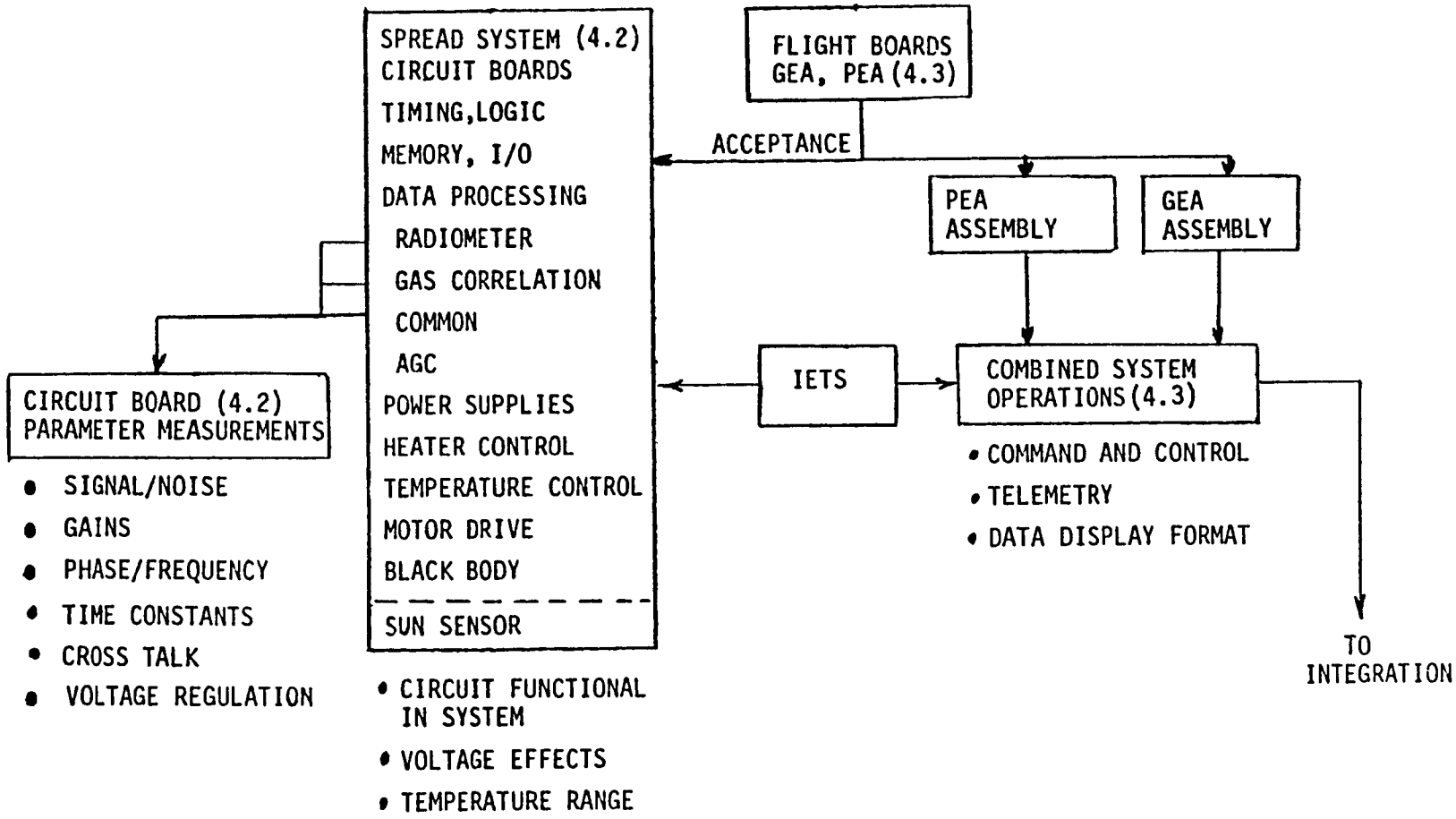

Figure 4.1-1, Electronics Subsystem Testing

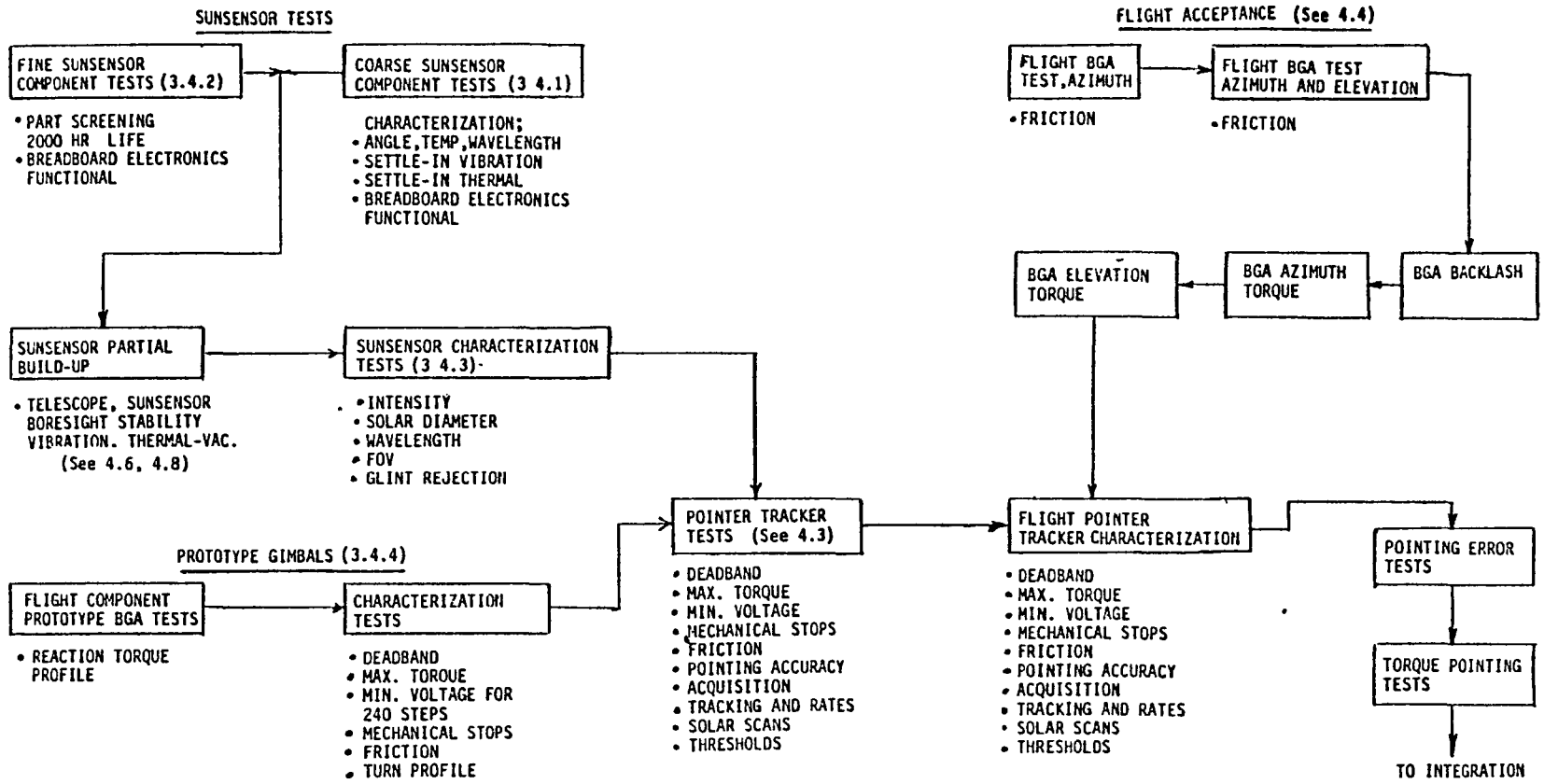

Figure 4.1-2, Flow of Tests for the Pointer Tracker Subsystem

TABLE 4.1-1. SUMMARY OF OPERATIONS PERTINENT TO SUBSYSTEM TESTING

Consideration \ Test	Spread System Operation 4.2	PEA-GEA-IETS System 4.3	Pointer-Tracker Subsystem 4.4	Gimbal Sunsensor Acceptance 4.5	Thermal Vacuum Boresight Stability Thermal Model 4.6	Dynamic Model Vibration 4.7	Telescope Sunsensor Vibration 4.8
Previous Data or Test Results		• Spread System Results	• Vibration (4.8) • Thermal Vacuum (4.6) • Component Acceptance	• Pointer-Tracker, 4.4	• Optical Alignment		• Optical Alignment
Special Facility or Test Equipment	• Electronics Laboratory • IETS	• Spread System	• Rate Table • Heliostat • Sunsensor Adapter • Auxiliary Computer	• See 4.4	• Auxiliary Heaters and Thermistors • Data System • Chamber Mounts • Solar Simulator	• Adapter Plate • Shaker • Harmonic Analyzer	• Vibration Adapter Fixture
Procedures Used	• Instrument Operation • IETS Operation • Special Test Routines	• Instrument Operation • IETS Operation • Circuit Board Acceptance	• Instrument Operation • Rate Table • Data System	• Instrument Operation • Rate Table • Data System	• System Coordination • Optical Alignment • Thermal Vacuum Env.	• Special Test	• Vibration Test
Data for Record	• Command • Telemetry Records • Circuit Board Parameters	• Command Resp. • Housekeeping Telemetry • Circuit Board Parameters	• Subsystem Operation to Specification	• Verify Flight Subsystem	• Optical Axis Alignment • Measurements for Thermal Model • MLI Efficiency	• Mode Shapes and Frequencies • Measurements of Structural Response to Flight Env.	• Optical Axis Alignment • Vibration Response
Measurements to Support Flight Acceptance or Flight Data	• Circuit Board Parameters • Evaluate for Flight Inversion	• Circuit Board Parameters • Electrical Cross-Talk to Multiplexer • Procedures for Integration/Acceptance • Telemetry Values for Integration/Acceptance	• Procedures for System Test • Measurements for Comparison	• Verification of Performance	• Optical Alignment Stability (Flight) • Flight Thermal Model • MLI Efficiency	• Verify Structural Capabilities for Flight Environment	• Optical Alignment Verification

4.2 Electronic System Operation and Evaluation, the "Spread" System

4.2.1 Objectives

The electronic system operation and evaluation tests begin with a build up of circuit boards to form the "spread" system to establish the overall operating compatibility for the IETS/PEA/GEA combined system. The spread testing will:

A. Perform the operating evaluations of the PEA, GEA and IETS to establish the functional capability and verify operation over the full range of supply voltages.

B. Evaluate the functioning of the circuits relative to noise sources or other disturbances toward eliminating the sources or minimizing noise effects by means of changes to circuitry, introduction of shielding, or modifications to interconnections.

C. Exercise the on-board logic and ground system control software to show functional capabilities and compatibility.

D. Develop the test control and data reduction formats to support integration and acceptance testing (e.g., provide the IETS system procedures).

E. Evaluate the effects of temperature on the operation of the subsystem.

F. Provide the capability to perform specific measurements on circuit boards for parameters considered critical to flight data inversion (e.g., gains, voltage, stability, time constants, etc.).

G. Provide the flight acceptance test facility for the flight circuit boards.

4.2.2 Test Configuration and Equipment

The testing will be performed in the electronics laboratories (Bldg. 1299). The Spread System will include:

1. Gimbal Electronics Assembly: A full complement of circuit boards will be fabricated except for three gas correlation boards. Individual circuit board connectors will be flight type, but the other interconnects will not necessarily utilize flight connectors.
2. Platform Electronics Assembly: The spread system will contain all the circuit types within the PEA.
3. Instrument Electronics Test Set (IETS): The electronics for the ground support system will be fabricated for and mounted in standard 19" electronic test racks and will conform to the standards assigned for ground support equipment having a flight electronics interface. Interconnections will be compatible with the flight instrument.
4. Sunsensor Electronics: Two electronic test boxes provide signal conditioning for all three of the sunsensors and provide the appropriate inputs to the pointer/tracker control logic and telemetry electronics.
5. Laboratory Support Equipment: Many items of electronic test equipment, such as power supplies, oscilloscopes, meters, etc., will be used to support circuit board testing. Decade resistor boxes will simulate temperature sensors and signal generators will simulate radiometric inputs. A Techtronics Development Support System will be

used for developing and programming the on-board microprocessor.

6. Thermal cycle testing will utilize the existing chamber which can accept all the GEA and PEA boards at one time and cycle over the range 0 to 160°F.

4.2.3 Test Sequence

The Spread System testing begins with circuit board checkout and extends through a functional demonstration of the PEA, GEA and IETS in a manner which simulates the flight systems operation. The phases of the testing include:

A. Spread System Circuit Board Level Testing. Circuit board tests will use laboratory power supplies, simulated inputs, and simulated loads. Timing and control, waveshapes, noise, and functional requirements will be measured. Most board related and design-related problems will surface during these tests and become the basis for implementing corrective changes.

B. Spread System Combined Board Testing

The combined board testing begins with the timing/switching logic/data handling boards and continues with the sunsensor electronics, temperature controller, and radiometer and gas channel signal conditioner boards until the entire system is tested. Since flight firmware and the IETS are used during this test, a total systems evaluation is accomplished. For these tests, decade boxes provide the simulations for temperature sensor inputs and signal generators provide simulations for telemetry inputs from the other data channels. Dynamic stimulations from sensors or sensor simulators will

provide input for the sunsensor related functions. Outputs may be real (motors) or may be load simulations (such as a resistor for a heater). The combined board testing will identify the causes of noise or other unacceptable effects within the system. These problems will become the basis for changes or other appropriate corrective action.

C. System Evaluation Testing

The system evaluation testing will exercise the entire HALOE electronic subsystem. Commands will be sent to exercise the instrument through all operating modes. When the electronic subsystem is functionally acceptable, performance measurements, such as multiplexer cross-talk and data system noise, are made. When performance is acceptable, the subsystem is operated over the expected UARS voltage supply range. Finally, thermal cycles from 25 to 104°F are conducted to assess temperature sensitivity.

D. Measurement of Parameters from Circuit Boards

Performance parameters considered critical to the interpretation of flight data will be measured during a thermal cycle sequence on circuit boards selected from the spread system. The boards and measurements will include:

1. Radiometer Board. (All four channels)

   a) Signal-to-noise ratio is measured at the output of the demodulators with a test signal input at 150Hz set to yield 4.2 VDC output.

   b) System gain is measured from the input to the second stage AC amplifier to the output of the demodulator.

Test signal inputs are selected to provide a 4.2 VDC output.

c) Low pass filter. Amplitude-phase relationships between the input signal and the output signal are measured. Input signal ranges from 0.1Hz to 2Hz (demodulator switches out of circuit). These measurements are performed as a function of temperature to determine if the flight boards should be measured as a function of temperature.

d) DC Offset. The DC offset voltage at the output of the demodulator with no signal input is measured.

2. Gas Channel Boards

a) Gain verifications for V, R, ΔV,ΔR. Using inputs of 150 and 300Hz, the as-installed gains of the AC amplifiers unique to the V, R, ΔV, and ΔR signals are measured.

b) Cross-talk Effects. Using the 150Hz test wave, the DC output voltages at R and ΔR are measured. Using the 300Hz test wave, the DC outputs at V and ΔV are measured. Corrections are made for the harmonic distortion in the test wave.

c) Noise. Using test waves at 150 and 300Hz, electronics are balanced to ΔV = 0. Data is recorded at ΔV = 0 for 15 minutes. The data is analyzed statistically for ΔV drift and bias.

d) AGC Loop Time Constant. The time constant of the AGC loop is measured by monitoring the time for the

ΔR signal to reach a steady state value after applying an offset to the AGC loop DAC.

e) Low Pass Filter Response. The amplitude-phase relationship for each filter over the range 0.1Hz to 2Hz (demodulator switches out of the circuit) is measured. These measurements are performed as a function of temperature to determine if the flight boards should be measured as a function of temperature.

f) DC Offset. The DC offset voltage at the output of each demodulator with no signal input is measured.

g) Methane (CH_4) ΔV Bias Offset. The ΔV signal induced by the bias circuit on the methane channel is measured.

h) AGC Circuit Characterization. The gain of the AGC circuit from the multiplier feedback signal input to the multiplexer is measured.

3. Common Boards.

a) Bolometer Calibration. A calibration on the bolometer bias current and bias voltage circuits is performed for characterizing bolometer telemetered data.

b) The output voltages of the bolometer power supplies (+29 VDC, -29 VDC) as a function of the input voltages to the converter regulator circuit are characterized.

4. Preamplifiers. The noise figures for the radiometer and gas channel preamplifiers are measured. These measurements will be performed at ambient and at 104°F as part of a 5 cycle-thermal environment that includes a 0.5 hour dwell at -10°F before the initial measurement at 25°F. This is followed by a 0.5 hour

dwell at 150°F before the first measurement at 104°F. These measurements will be evaluated for application to the acceptance of the flight circuit boards.

E. Flight Circuit Board Acceptance Test Capability

Each of the flight circuit boards will be functionally operated within the Spread system as part of the acceptance test sequence (see 4.3).

F. Thermistor Readout Circuit Calibration

Each thermistor readout circuit will be calibrated such that thermistor telemetry outputs can be converted to degrees celsius (see Section 3.2.6).

G. Parameter Telemetry Calibration

Each parameter monitor telemetry channel will be calibrated such that telemetry data can be converted to the appropriate engineering units.

H. Special Purpose Support Testing

The Spread System will be kept as an operational facility for resolving test related problems arising during assembly, integration, and fabrication of flight components. The tests or evaluations will be defined on an as-needed basis.

4.2.4 Controls and Documentation

The conduct of the Spread System testing in the laboratories will be progressively controlled in accordance with the complexity or criticality of the testing. The initial individual and combined board testing will have informal controls in the form of laboratory notes and records. The results from tests will become the basis for generation of the instrument system operation test procedure which will control all subsequent integration and

acceptance test. The acceptance testing of flight circuit boards will use this procedure, with possible modifications pertinent to the acceptance of a particular circuit board.

4.2.5 Results and Data Generated

The results of Spread Testing will be used to confirm the acceptance of the electrical subsystem configuration. These results are also used to generate:

1. The system test procedure.
2. Software descriptions for the on-board microprocessor and IETS. These include logic flow diagrams and instructions for the operating modes, the special test routines, and the data display options.
3. Compilations of measurements and response data. These data will represent actual case printout or plots retained for comparison as support to subsequent testing.
4. Test records from the special circuit board tests. Print-outs of data pertinent to each circuit board.

4.3 PEA/GEA/IETS Flight Acceptance Tests

4.3.1 Objectives

These tests are run on the Spread System as the test facility for functional flight acceptance tests of the PEA and GEA subsystem. Also the GEA, PEA, and IETS will be functionally demonstrated. The testing will:

A. Verify the electrical operating compatibility of the flight circuit boards within a total system.

B. Verify the electrical performance capability of the flight PEA, GEA and IETS.

4.3.2 Tests Configuration and Equipment

The testing will be performed in the electronics laboratories (Bldg. 1299). The test setup will include:

A. The Spread System in the finalized configuration after completion of the testing described in 4.2 above.

B. The IETS in the final configuration after completing the testing described in 4.2 above.

C. A test interconnect cable to operate between the PEA and GEA. (This cable will support integration testing,)

D. The laboratory support as developed during the testing described in 4.2 above.

4.3.3 Test Sequence

A. Flight Circuit Board Acceptance

All flight circuit boards will be functionally operated within the Spread System as part of the acceptance test. This test will also demonstrate proper response to commands, data handling and control, and all telemetry channels. These tests will extend over the UARS range of operating voltages and

include thermal cycling over the range 25 to 104°F. The measurements of performance parameters on individual circuit boards will be performed in accordance with requirements defined from the tests described in 4.2 above. Results, as telemetry records, oscilloscope records, or timing of events will be generated for record.

B. PEA-GEA-IETS Functional Acceptance

The flight PEA, GEA, and the IETS will be interconnected and operated. The GEA-PEA interconnection cable will be subsequently used during system integration testing (see 5.5 later). The tests will show power, logic, and command-response functions for all the operating modes and for the special test routines intended for use during system integration and system acceptance testing. These tests will provide the telemetry measurements and voltage measurements which will become the basis for data comparison in subsequent instrument integration testing. The systems operating procedures developed for these tests will become the control document for instrument integration tests.

4.3.4 Controls and Documentation

These tests will use test procedures and the IETS operating manual which were developed during the Spread System testing. The acceptance of flight circuit boards will use test procedures with specific considerations or measurements pertinent to the acceptance of a particular circuit board. The general test procedure will be supplemented by special test procedures for the measurement of performance parameters on circuit boards.

4.3.5 Results and Data Generated

A. The HALOE Systems Test Procedure and IETS Operating Manual, which will define the test sequence for the instrument during integration tests, will be developed.

B. Software for the on-board microprocessor and IETS will be developed. Software descriptions, which include logic flow diagrams for the operating modes, will be developed along with special test routines and the data display options.

C. Trending of all instrument telemetry channels will be retained for comparison to integration testing.

D. Acceptance test data and parameter measurement records from flight circuit boards with printouts of data pertinent to each flight circuit board will be retained.

4.4 Pointer/Tracker Subsystem Tests

4.4.1 Test Objectives

The pointer/tracker subsystem tests provide the measurements which integrate the sunsensor to the prototype BGA. The tests will:

A. Measure the performance parameters and characteristics of the system in terms of dead bands, torques, supply voltage sensitivity, friction, etc.

B. Measure angular positions in response to pointing commands which cover the full range of movements in both azimuth and elevation and show compliance within specified accuracy by comparison of final position with commanded positions.

C. Measure rates of motion in response to commands over the full range of velocities for both azimuth and elevation and show compliance within specified accuracy by comparing rates achieved with rates commanded.

D. Measure the angular offset and intensity thresholds for solar acquisition and tracking in both azimuth and elevation track.

E. Provide measurements of the system operation throughout all the flight sequence including solar disc scans.

F. Measure sensitivity of the coarse sunsensors to changes in wavelength.

G. Measure sensitivity of coarse sunsensors to out-of-field radiation (glint).

H. Measure sensitivity of fine sunsensor to a simulated cloud.

J. Measure minimum solar extent for fine sunsensor operation.

4.4.2 Facility and Equipment

These tests will be performed in the preclean room adjacent to the instrument clean area (Room 140 complex, Building 1202). The pertinent features of the installation are shown in figure 4.4.-1 and include:

1. Rate Table and Fixture. The vertical-axis rate table will have a right angle fixture to accommodate testing for each axis.
2. Solar Source. The heliostat will provide a solar source for these tests. The solar disc edge will be masked in an optical reimaging system to provide spatial source stability.
3. Instrument Assembly. The assembly will use the flight instrument mounting adapter, the prototype gimbal units, and the prototype main frame with dummy weights to simulate the telescope and optics. A test bracket will position the flight sunsensor relative to the elevation gimbal.
4. Electrical Operating System. Electronics will include the flight sunsensor and flight equivalent circuit boards for the sunsensor electronics, motor drives, and the command-control logic.
5. Data and Measurement System. A laboratory computer will provide real-time readout in engineering units.

4.4.3 Sequences of Tests

A. System Parameter Measurements. The measurements will be performed with the aid of auxiliary loads, spring scales, etc. Measurements will include:

1. Dead band or backlash.
2. Torque and friction.
3. Voltage margin.

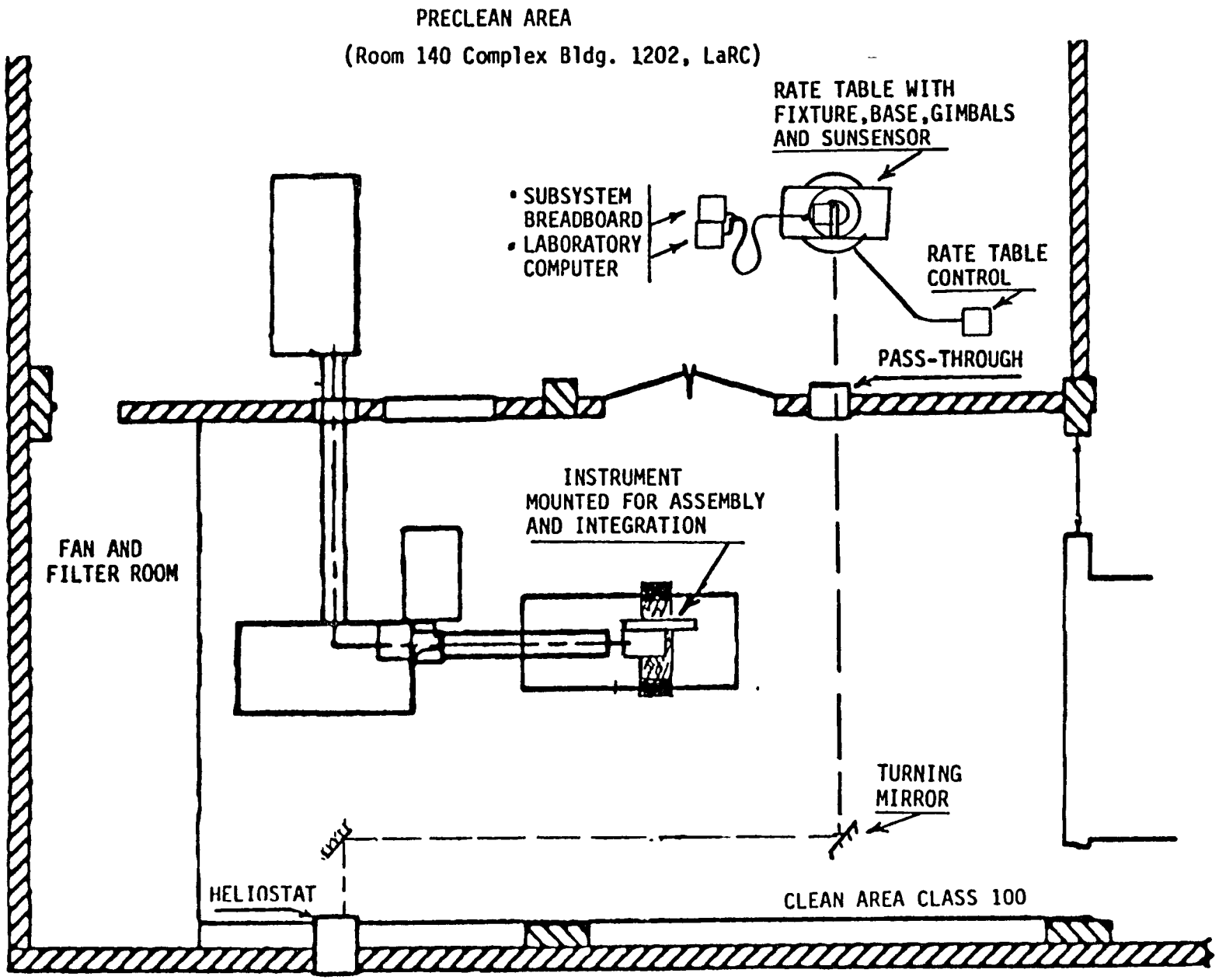

Figure 4.4-1, General Laboratory Configuration for Pointer Tracker Subsystem Testing

B. Positioning Accuracy. A series of slew to acquire and stow commands will be delivered to the gimbals. The measured angle actually moved (from rate table system) will be compared with angular command imposed. The acquire command will bring the sunsensor into alignment with the beam from the heliostat and then acquisition is initiated. Deviations from the desired position will be measured by means of the sunsensor telemetry channels and the laboratory data system.

C. Rate Accuracy. A series of slew or track commands will be imposed upon the gimbal drives. For these tests the rate table will be energized in a countering movement. The relative position of the gimbals and the rate table will be compared. Tests involving a tracking simulation will have the countering motions imposed such that the deviations from track rates can be monitored by the sunsensor positioning indicators which would appear in telemetry during flight.

D. Solar Scan Simulation. The solar scan sequence will be exercised and the fine sunsensor moved across the solar disc image from the heliostat. The responses from the diode array will be measured for comparison with the specifications. These measurements will be performed over the range of azimuth and elevation positions and track rates anticipated during flight.

E. Solar Intensity Dynamic Range. The solar intensity will be reduced using neutral density filters until the gimbals will no longer respond.

F. Minimum Solar Extent. The solar disc diameter will be reduced until the fine sunsensor controlled elevation gimbal looses lock.

G. Spectral Sensitivity Test. Minus blue and minus blue/green filters will be inserted in front of the coarse sunsensors, and track error will be measured.

H. Glint Sensitivity Test. Gimbal sensitivity to radiometric sources outside the sunsensor field-of-view will be measured.

4.4.4 Documentation and Control

The conduct of the pointer-tracker tests will be controlled by a detailed procedure which defines the conduct of each test.

4.4.5 Results and Data Generated

The data will show or verify:

1. The gimbal will slew in azimuth through any angle up to 185° in either direction and position for sunsensor acquisition within 30 arc minutes (0.5 degree).
2. The gimbal will traverse in elevation over the entire 39 degrees and position for sunsensor acquisition within 3.0 arc minutes.
3. Slew rates of 1.08 degree/sec Az, 1.07 degree/sec El; Scan rate of 8.64 arc min/sec in elevation and tracking accuracy of 0.5° arc minutes in azimuth and in elevation.
4. The solar scan motions will locate the solar tracking position 4 arc minutes from the top edge of the sun.
5. The solar sensor in the tracking mode will operate over a dynamic illumination range of 100 and in the acquisition mode over a range of 1000.

4.5 BGA Flight Acceptance Test

4.5.1 Objectives

After the prototype BGA is replaced with the flight BGA, all tests described in paragraph 4.4 except for the sunsensor tests are repeated for Flight Acceptance Test.

4.5.2 Facilities and Equipment

The installation described in 4.4.2 will be used.

4.5.3 Test Sequence

The test sequence will follow the build-up of the assemblies.

A. Backlash, friction and torque measurements will be performed for gear trains and bearings without motors or control elements in place.

B. The pointer-tracker assembled unit will repeat the pertinent portion of the subsystem operations described in 4.4.3.

C. Pointing error measurements will include the full range of gimbal angular movements with particular attention to solar acquisition and tracking.

D. Torque pointing tests will measure the margin available with the motor drives working against dead weights or springs to define the upper limit for operation against degraded bearings or partial binding of components.

4.5.4 Procedure

The tests will utilize the procedure developed for subsystem operations (4.4.4). The procedure will apply to subsequent integration and system testing.

4.5.5 Data for Record

Measurements will repeat the results from tests performed in paragraph 4.4.5.

4.6 Telescope-Sunsensor Thermal-Vacuum Boresight Stability and Thermal Model Validation

4.6.1 Test Objectives

The orbital operation of the instrument occurs under environmental conditions which cannot be completely simulated in any ground test. Therefore, a detailed predictive thermal/structural/optical model must be validated by a controlled test. The testing must:

A. Provide temperature measurements throughout the structure for evaluation and refinement of the thermal model.

B. Verify that the optical axis of the telescope and the optical axis of the sunsensors remain aligned during exposure to temperatures covering the operating range for the instrument.

C. Evaluate the efficiency of the multilayer insulation thermal blanket when exposed to simulations of the solar flux.

4.6.2 Test Configuration and Equipment

The tests are performed in the LaRC 8 X 15 feet thermal vacuum chamber. The general configuration is shown in Figure 4.6-1. The principal features of the configuration are as follows.

1. Test Assembly The test assembly consists of the mainframe, telescope, calibration wheel, sunsensor, and simulated radiators enclosed in multilayer insulation of flight-like configuration. Instrumentation includes 50 thermistors (including flight units) of which 38 are on the telescope. Auxiliary heaters include four located on the mainframe and three on the telescope. For optical sensing, an illuminated point target is incorporated at the field stop for the telescope and at the axial detector location of the fine sunsensor.

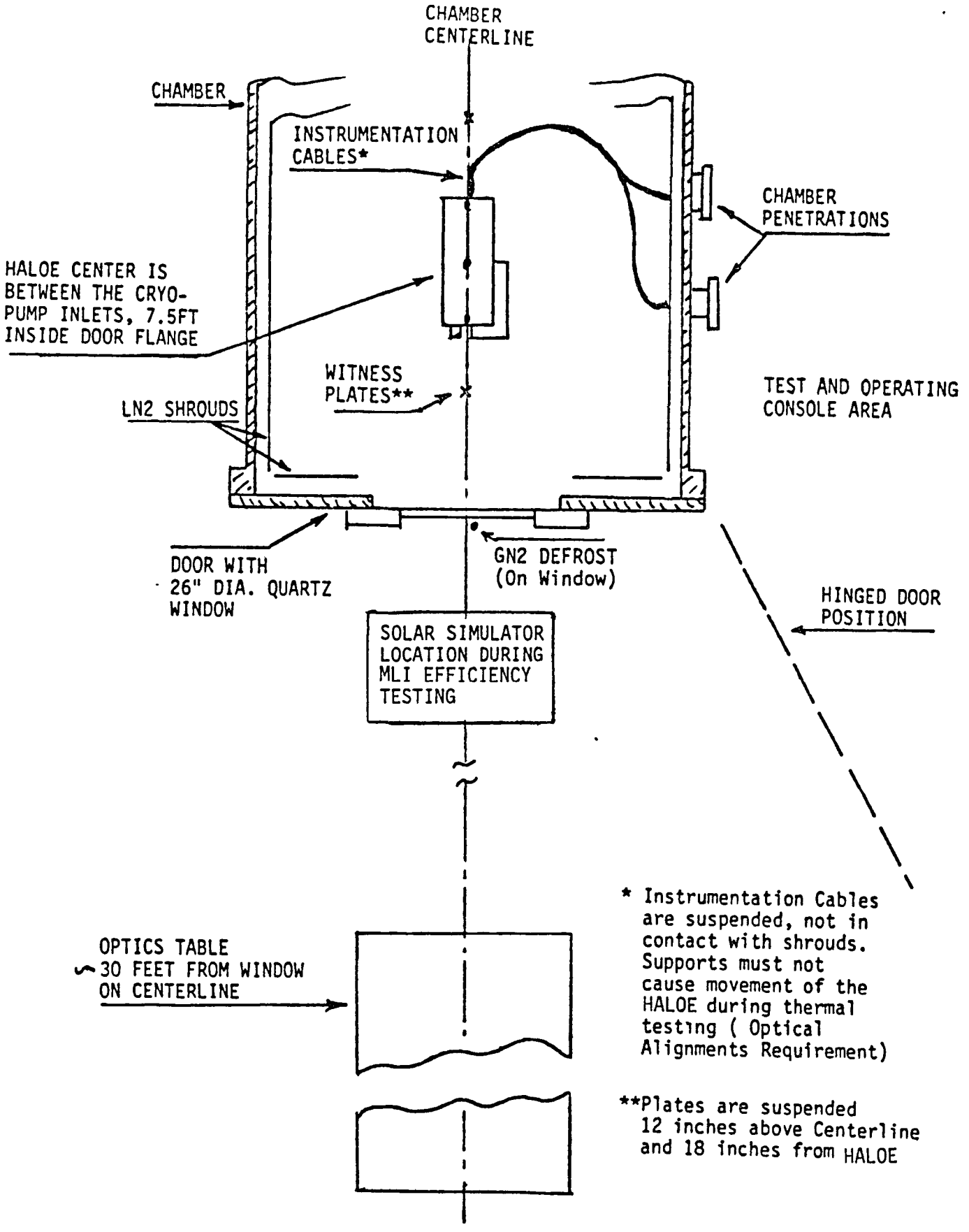

Figure 4.6-1 , General Configuration for Thermal-Vacuum Boresight Stability and Thermal Model Evaluation Tests.

2. Chamber Installation. The instrument is centered in the 8' X 15' chamber with the optical axes of the sunsensor and telescope parallel to and in the same plane as the center line of the chamber. A door incorporating a 27 inch diameter quartz window provides the access necessary for optical measurements and solar simulation.
3. Optical Measurements. The optical measurement system uses a reference source and off-axis collimating mirror to provide return beams from the sunsensors, the alignment cube, and from a small reference mirror mounted on the front face of the telescope. The measuring system tracks seven optical signals; a reflected reference on the table, four reflections from the instrument, and two illuminations from the instrument. The optical measuring system appears diagrammed in figure 4.6-2.
4. Solar simulation consists of a quartz lamp array which provides illumination equivalent to one Sun over the visible portion of the solar spectrum.
5. Heater and Instrumentation Control System. The heaters are powered by controllable regulators. Temperatures and power measurements are made with a computer controlled system which calculates, records, and provides a printout in engineering units.

4.6.3 Test Sequence

The test sequence begins with preparation in the clean room, followed by chamber installation and electrical checkout, and finally, application of the thermal/vacuum environments. The instrument is returned to the clean room for post-test evaluation and continuation of assembly operations. The steps become:

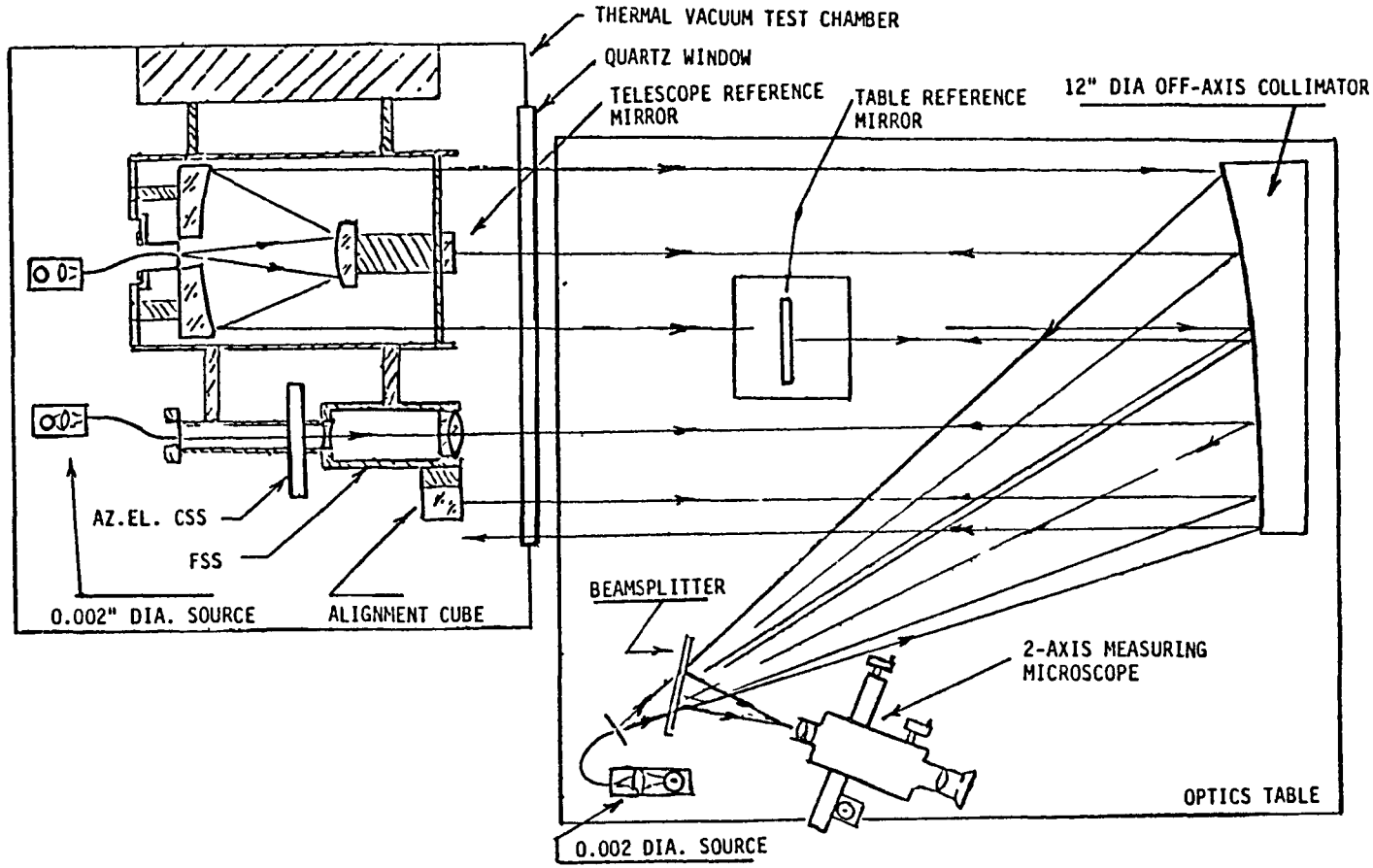

Figure 4.6-2, Optics for Thermal Vacuum Boresight Alignment Measurements

A. Clean Room Preparations. The clean room preparations include the installation and operational checkout of the heaters, light targets, thermistors, insulation blankets, and chamber mounting fixtures.

B. Chamber Installation and Checkout. After bagged and transported to the chamber area, the instrument is centered in the chamber and electrically checked out. The final phase of the test preparation involves aligning the optical monitor test setup with the instrument through the vacuum-chamber window in the door.

C. Boresight Stability and Thermal Model Validation. After establishing a vacuum which supports effective operation for the MLI (4×10^{-4} Torr or Less) a series of thermal equilibrium conditions are established which include the full operating range for mainframe temperatures and representative cases for in-orbit heating. Thermal model validation data are recorded during the transient periods and during equilibrium. (Thermal equilibrium is defined as no individual thermistor change greater than ±0.3°F in one hour.) Boresight measurements are performed at thermal equilibrium only. A total of 10 thermal equilibrium points will be obtained.

D. MLI Efficiency Evaluations with Simulated Solar Radiation. The instrument is positioned with the optical axis perpendicular to the center line of the chamber and the beam from the solar simulator is focused upon the MLI Covering the telescope. The efficiency of the MLI as a thermal barrier is determined from a temperature measurement during transients and at thermal equilibrium. The evaluation consists of representative cases for the mainframe

temperature at equilibrium. At the completion of the first set of measurements, the position of the instrument is reversed 180 degrees and the beam from the solar simulator is focused upon the sunsensor side of the telescope. The same series of six thermal conditions are established and measured.

E. At the completion of the exposures, the instrument is removed from the chamber, bagged for protection, and returned to the clean room for post-test inspection.

4.6.4 Controls and Documentation

The procedures developed for the test are:

1. Test Coordination for Thermal Vacuum Boresight Stability and Thermal Model Validation (H-09-031).
2. Thermal Model Validation Test Procedure (H-09-032).
3. Boresight Stability Test Procedure (H-09-033).

4.6.5 Data and Results Obtained

The specific measurements and results for record from these tests will consist of:

1. Temperature distribution measurements recorded on computer printouts and data tapes. Temperatures will be recorded for one minute intervals over the first 15 minutes of transient and every five minutes thereafter until equilibrium. (These data become inputs to thermal model evaluations.)
2. Chamber Data. Wall temperatures and vacuum level data will be monitored every half hour.
3. Boresight measurements consist of seven coordinate positions measured at thermal equilibrium. Data format is defined in the procedure.

4. Updated procedures. These procedures are updated to incorporate details which will be retained for reference and support for the system thermal vacuum exposure tests.

4.7 Dynamic Model Vibration Tests

4.7.1 Objectives

The vibration testing of the System Dynamic Test Model must provide the measurements of dynamic response which:

A. Validate the analytical dynamic model for predicting loads and stiffness requirements at component location.

B. Show the instrument compatibility with the vibration environment associated with launch and delivery to orbit.

The validation requires the identification of structural modes and associated resonant frequencies coupled with measurements of instrument dynamic responses when subjected to the launch environment. The compatibility demonstration for the instrument proceeds in steps. First, the testing of the dynamic model shows the compatibility for the mounting adapter and gimbals. Second, the compatibility of the mainframe/telescope/sunsensor assembly is tested (see 4.8).

4.7.2 Test Equipment and Facility

The test facility for the vibration test uses the shaker installation in building 1250 and data processing system. The particular items include:

A. The instrument dynamic model, which consists of the adapter, the prototype biaxial gimbal assembly, and prototype mainframe. Sub-assemblies mounted to the prototype mainframe are simulated by masses matched for weight and inertia to the particular item at that location (e.g., telescope-sunsensor, GEA, radiators, etc.). The change in the design of the adapter has resulted in two configurations for the dynamic model and the data from these tests are considered complementary.

B. Shaker Adapter Plate. The plate provides the interface between the shaker fixtures and the instrument adapter.

C. A Harmonic Analyzer in the shaker facility will define structural modes.

D. Triaxial accelerometers are located as follows.

1. Input to instrument adapter
2. Top face of azimuth gimbal
3. Mainframe, lowest edge of telescope mounting surface
4. Mainframe, lowest edge at GEA interface
5. Mainframe, edge under frame radiator
6. Mainframe, point under detector radiator

4.7.3 Test Sequence

A. Determination of Mode Shapes and Frequences. A multinode structural model will be programmed into the analyzer with responses from low level exitations of the structure (e.g. bumps). The mode locations, shapes, and frequences will be determined for all resonances below 128Hz.

B. Random Vibration Exposure. Three axes of random vibration will be applied. These are defined in Table 14-1, of the GIIS 430-1601-003 Rev. C. The responses from all accelerometers will be recorded for each axis.

4.7.4 Documentation and Control

These tests will be controlled by a test procedure (HALOE-12-055).

4.7.5 Results and Data Generated

Data and measurements will include:

A. Mode shapes, locations, and frequencies for structural resonances up to 128Hz.

B. Power spectral density plots from accelerometers, 63 cases (3 axes, 21 accelerometers).

4.8 Telescope/Sunsensor/Mainframe Vibration Tests

4.8.1 Objectives

A. Verify the alignment stability of the sunsensor to the telescope after exposure to 3 axis random vibration levels of 7.09 grms for 30 seconds. (From analytic predictions).

B. Measure the vibration response at the telescope for comparison with the analytical model.

4.8.2 Test Configuration

This test uses the shaker facility located in Building 1250 of the LaRC. Figure 4.8-1 shows the general configuration. Test fixtures include:

1. A pedestal type mounting fixture attached to the moving plate of the slip table which supports the mainframe at the bolt circle for the elevation gimbal.
2. Triaxial accelerometers are mounted on the mainframe at the support point and on the telescope at the calibration wheel mounting interface.

4.8.3 Test Procedure

A. Preparation in Clean Room. The telescope and sunsensor are optically aligned and mated to the vibration fixture. Then, the entire assembly is instrumented, bagged, and transported to the shaker facility.

B. Test Installation. The vibration fixture is bolted to the slip table and then accelerometer leads are connected to the recorders.

C. Environment. Each of the three axes receives a 30 second exposure to a random vibration excitation of 7.09 grms overall controlled at the telescope.

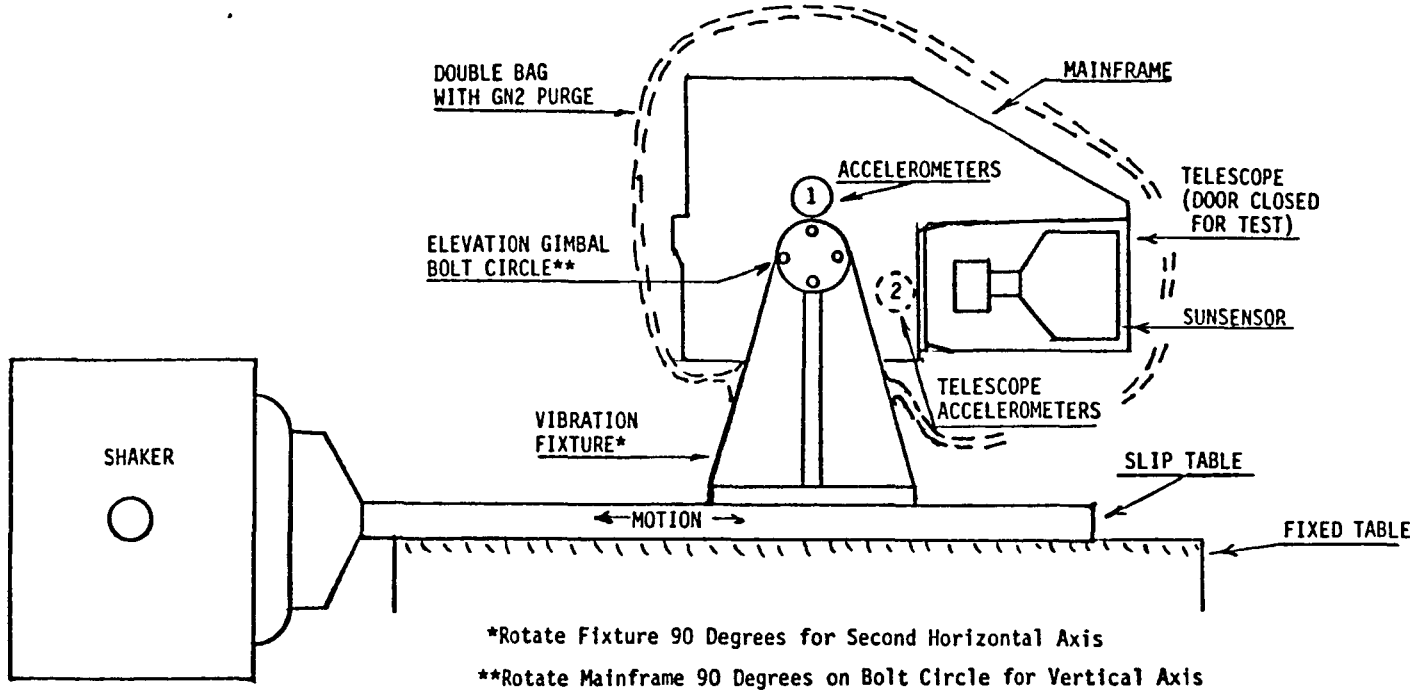

Figure 4.8-1, Configuration for the Telescope-Sunsensor-Mainframe Vibration Test

D. Recovery. The test unit is returned to the clean room where the bags are removed. Then, optical alignment is checked.

4.8.4 Procedure

The testing will be controlled by a special test procedure (HA-09-027).

4.8.5 Data For Record

1. Boresight alignments are measured before and after the test and compared for changes.
2. A power spectral density analysis of the responses from the accelerometers is done. The control accelerometer must show compliance with input requirements while the analysis of other accelerometer data must show responses within limits established by the analytical dynamic model. The profile is level from 120Hz to 600Hz at $0.025g^2$Hz and shows a 9db/octave roll-up from 20Hz and a 9db/octave roll-off to 2000Hz.

5.0 INTEGRATION AND CHARACTERIZATION TESTING

5.1 General Considerations

The testing for integration and characterization accompanies the buildup and final assembly of the instrument. Figure 5.1-1 presents the flow of events and tests plus an indication of the test content. Table 5.1-1 describes the test content, summarizes the pretest requirements, lists the test protocols, and defines the required data from the test. The sequence begins with the installation and alignment of the detectors together with the installation of baffles. These test operations must depend upon non-flight electronics for measurements and data. The installation of the pre-amplifiers GEA and PEA completes the electronics system that provides the science data and permits testing for performance verification and for characterizing the radiometric performance of the instrument. The mating of the optical head to the gimbals permits functional testing of the pointer-tracker and the overall electrical operation of the instrument in a manner which simulates the in-orbit functioning on board the UARS. At the completion of the integration and characterization sequence, the instrument is ready to begin environmental testing.

Throughout the entire test sequence, the instrument remains within the HALOE Clean Room (Room 140, Bldg. 1202); figure 5.1-2 shows the general setup of the laboratory to support integration testing. The installation of the detectors is completed before the IETS and flight items are installed; and for these activities the test support equipment is located within the Clean Room. During the final assembly of the instrument the rate table is moved into the clean room. Some of the radiometric measurements require the precise insertion of gas cells, polarizers, etc. into the beam. The RSTS provides that capability; the optical schematic is shown as figure 5.1-3.

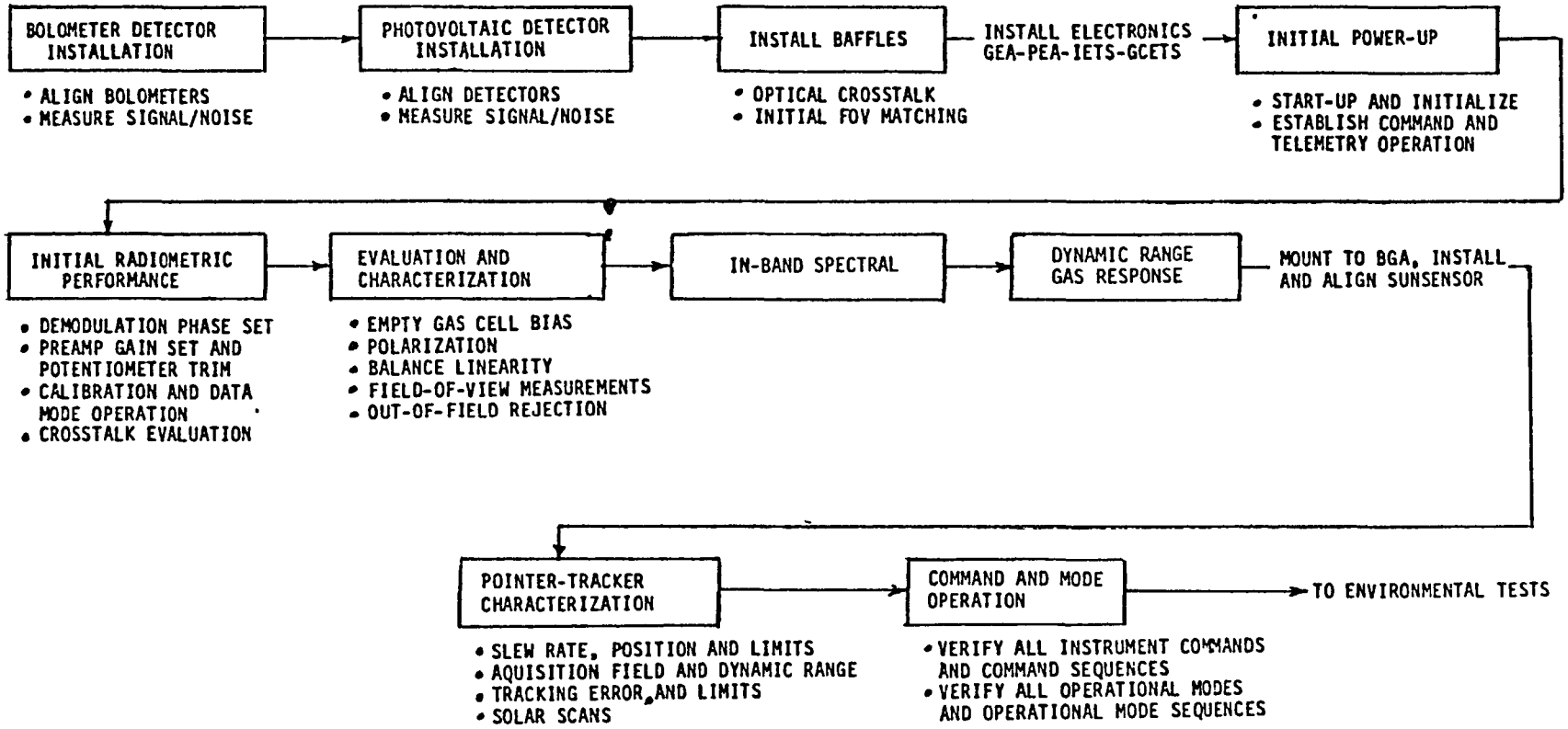

Figure 5.1-1, Flow of Tests and Events for HALOE Integration Testing

TABLE 5.1-1. SUMMARY OF OPERATING CONSIDERATIONS PERTINENT TO INSTRUMENT INTEGRATION TESTING

Concern \ Operation, Test	Assembly Installations and Alignments	Bolometer Detector 5.2	Photovoltaic Detectors 5.3	Cross-Talk and Initial IFOV Matching (IFOV) 5.4	Initial System Power 5.5	Initial Radiometric Performance 5.6
1. Precursor Data or Test Results	• Filter Transmissions • Component Acceptance • Circuit Board Noise Gain, Phase, Time Const.	• Bolometer Calibration	• Detector Calibration		• Spred System Op • Flight Circuit Board Acceptance • GEA-PEA, Operation	• Complete 5.5
2. Test-Support Equipment, Software, Data Reduction		• x-y Plot Voltages, Position (Single)	• x-y Plot Voltages, Position	• Beam Trap • Slit	• GEA Operations • IETS Operating • Telemetry Decom • IETS Ability to Monitor • GCETS Operation • Plot, Multi Channel	• All of 5.5 - • RSTS • Statistical Analysis • Trend Analysis • Power Spectral Density • Correlation
3. Procedure Requirements	• Installations • Alignments • Harness Continuity • Electrical Isolation	• Detector Location and Operation	• Detector Location and Operation	• Field-of-View Matching • Cross-Talk	• System Sequence (Partial)	System Sequence with: • Demod Phase Set • Preamp gain and pot trim • Cal Data Mode • Cross-talk • RSTS Verification
4. Procedures and Computer Programs Used in Further Test		• See Data	• See Data	• IFOV Procedure • x-y Plot, Dual Position, Voltage	• System Test Procedure (Partial)	• Radiometric Performance (partial)
5. Data Retained for Records	• Inspection Records • Alignment Records • Electrical Integrity	• Location Plots • Stray Light Control • Signal to Noise	• Location Plots	• Cross-Talk • IFOV Matching	• Interface Verification • Data for Trend Analysis	See Table 5.6-1

TABLE 5.1.-1. SUMMARY OF OPERATING CONSIDERATIONS PERTINENT TO INSTRUMENT INTEGRATION TESTING (Concluded)

Operation, Test / Concern	Characterization Test 5.7	In-Band Spectral 5.8	Dynamic Range and Gas Response 5.9	Pointer-Tracker Characterization 5.10	Command and Mode Operation 5.11
1. Precursor Data or Test Results	Complete Initial Radiometric Tests	Complete Initial Radiometric Balance and IFOV	Complete 5.6 and Empty Cell Bias	Complete 5.6 and Assembly to Gimbals	Complete 5.6 and 5.10
2. Test-Support Equipment Software, Data Reduction	All of 5.6 plus Empty Gas Cells • Polarizers • Knife Edge Scan	All of 5.7 plus • Spectral Scanning Monochromator Source • Auxiliary Sensors for Monitor of Input Energy • Plot of Signals vs. Wavelength	Same as 5.6	• Assembled Instrument on Rate Table with Fixtures • IETS Control • Rate Table Control • Heleostat and Auxiliary Source • Auxiliaries from subsystem test (4.4, 4.5)	All of 5.6 and 5.10
3. Procedure Requirements	System Sequence with • Empty Cell Bias • Polarization • Balance Linearity • FOV-IFOV • Out-of-Field	System Sequence with Special Procedure for In Band Operations	System Test Procedure • For Dynamic Range • Gas Response	System Test Procedure with Pointer-Tracker Operation Included	System Test Procedure Total
4. Procedures and Computer Programs Used in Further Test	System Operation • Cell Bias • Balance Linearity • FOV-IFOV • OOF	Repeat Measurements after environmental exposures	Partial Gas Response used in System Performance Verification Level	System Test Procedure	System Test Procedure Total
5. Data Retained for Records	Polarization Sensitivity IFOV, FOV Measurement, OOF Measurements	Measurements of System Spectral Transmission Responses	Radiometric Responses to Interferent Gases	Pointer-Tracker Performance Validation	Verify Full Operating Control and Operating On-Based Software

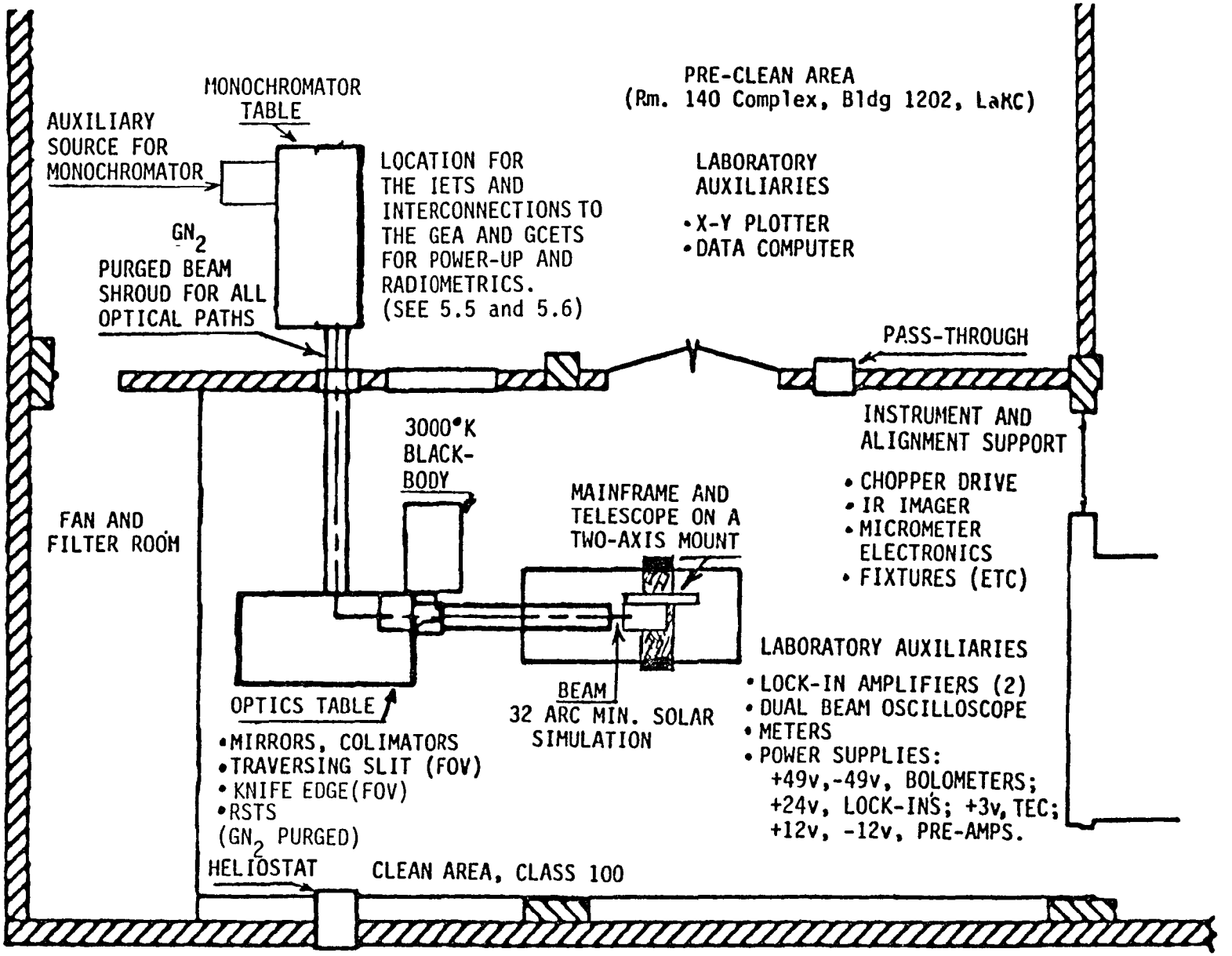

Figure 5.1-2, General Laboratory Configuration During Integration

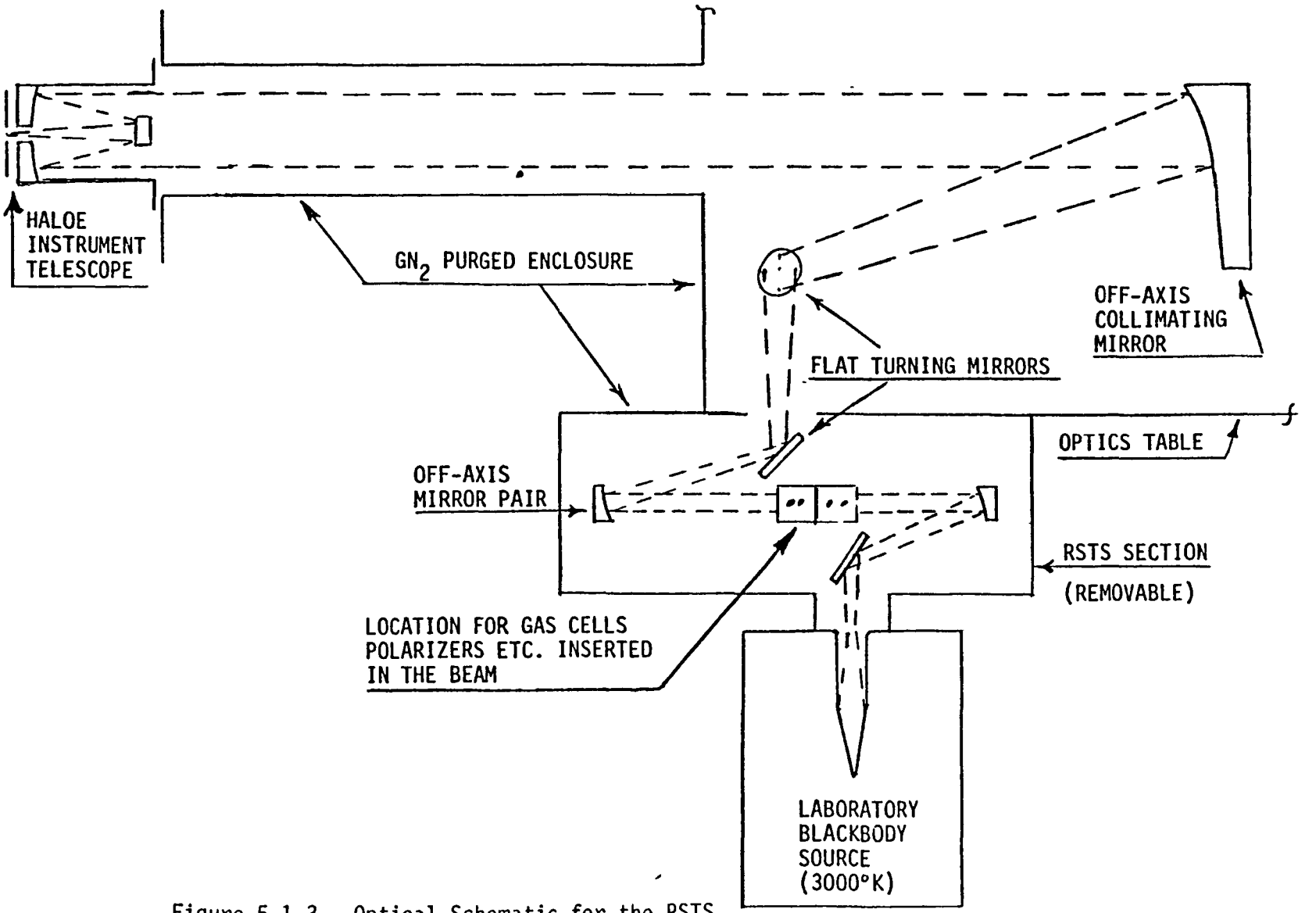

Figure 5.1-3, Optical Schematic for the RSTS

5.2 Bolometer Detector Alignment

5.2.1 Objectives

A. Align the bolometer detectors in the center of the appropriate beams at the aperture stop image.

B. Measure the signal to noise ratio (S/N) and compare it with the predicted value. Note: Because the absolute magnitude of the energy entering the telescope is unknown, the predicted S/N ratio is only approximate. As a consequence this test will be repeated as part of the initial radiometric performance measurements.

5.2.2 Equipment and Facility

A detailed schematic for the measurement setup is shown in Figure 5.2.2-1. Alignment of the bolometer detectors requires the following equipment:

A. Bolometer detectors

B. ±29V bias supply for the bolometer detector

C. Chopper drive signals

D. Preamplifiers with slip-on connectors

E. Synchronous demodulator (lock-in amplifier)

F. Electronic micrometer gauges which measure relative motion along two orthogonal axes

G. Computer system for sampling and displaying detector output (lock-in amplifier output) as a function of detector position

H. Blackbody source

The path between the blackbody source and the telescope will be purged during the installation of the H_2O channel detector.

5.2.3 Test Sequence

A. Detector Alignment

Establish the test equipment configuration shown in Figure 5.2.2-1. Map the radiometric signal as a function of the detector position. Verify that the image size is the same as predicted. If necessary, replace the nominal shim by larger or smaller shims to position the detector at the proper distance from the last field lens. Repeat the signal mapping for each shim until the proper image size is recorded. Position the detector in the center of the image.

Repeat the above for each of the four broad-band radiometer channels.

B. S/N Ratio. Measure the lock-in amplifier output with the blackbody set at 2500°K and with the beam blocked. Calculate the S/N ratio and compare it to the predicted S/N ratio. Isolate and eliminate excess noise.

5.2.4 Procedures Required

A. Detector Alignment: Write a procedure for the bolometer detector alignment.

B. Signal-to-noise Ratio: Write a procedure for this test.

5.2.5 Data Retained for Record

A. Detector Alignment: Maps generated by each shim thickness and redlines to drawings showing changes to the hardware required to align the detectors.

B. Signal-to-Noise Ratio: Redlines to procedures showing additional testing required to isolate excess noise and redlines to drawings to show changes to the hardware required to eliminate excess noise. Measurements of final S/N ratio.

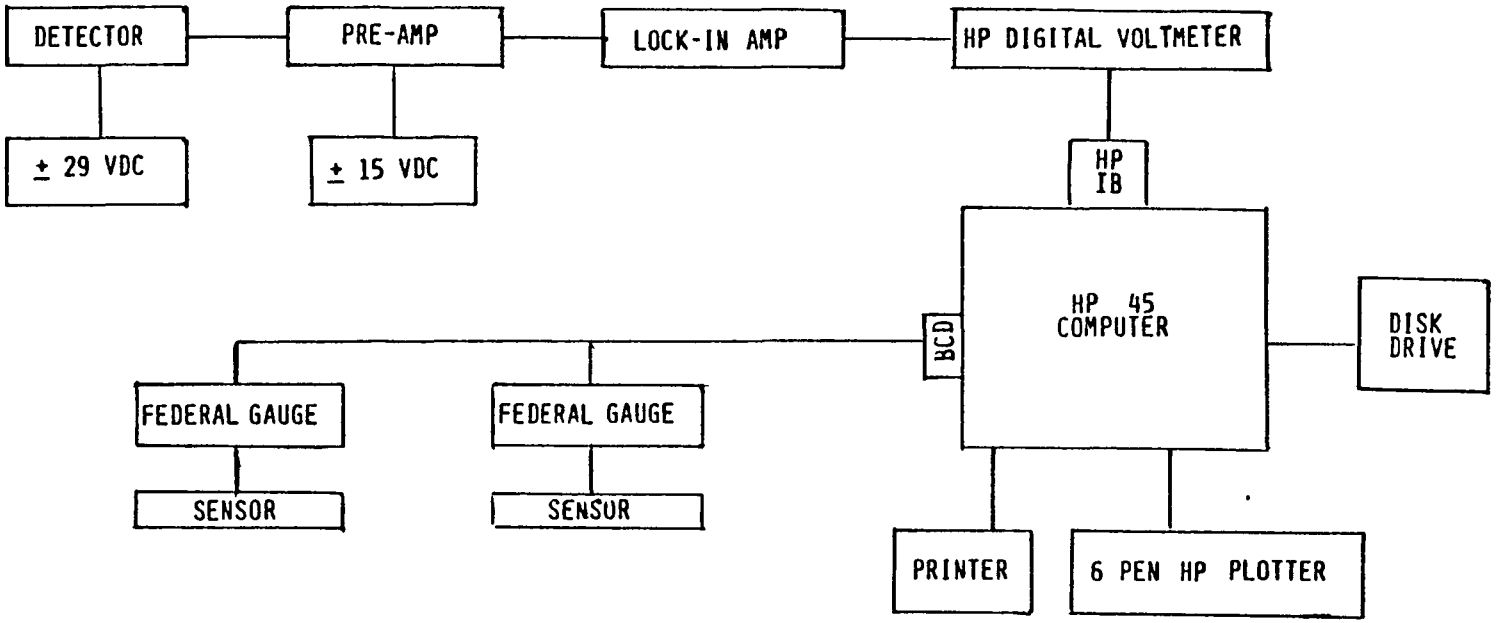

Figure 5.2.2-1, Test Setup for the Bolometer Alignment

5.3 Photovoltaic Detector Alignment

5.3.1 Objectives

A. Align the gas-filter correlation (GFC) channel photovoltaic detectors in the center of the beam at the aperture stop image.

B. Measure the signal-to-noise ratio for each detector and compare it with the predicted signal-to-noise ratio.

5.3.2 Equipment and Facility

A detailed schematic for the measurement setup is shown in Figure 5.3.2-1. Alignment of the photovoltaic detectors requires the following equipment.

A. Photovoltaic detectors

B. Thermoelectric cooler controllers

C. 3.5 VDC power supply for the InAs TEC; 7.0 VDC power supply for the HgCdTe TEC

D. Preamplifiers with slip-on connectors

E. Synchronous demodulator (lock-in amplifier)

F. Electronic micrometer gauges which measure relative motion along two orthogonal axes

G. Computer system for sampling and displaying the detector output (actually the lock-in amplifier output) as a function of detector position

H. Blackbody Source

5.3.3 Test Sequence

A. Gas Path Detector Alignment: Repeat 5.2.3.A modifying the procedure to include TEC power and to eliminate bolometer bias power.

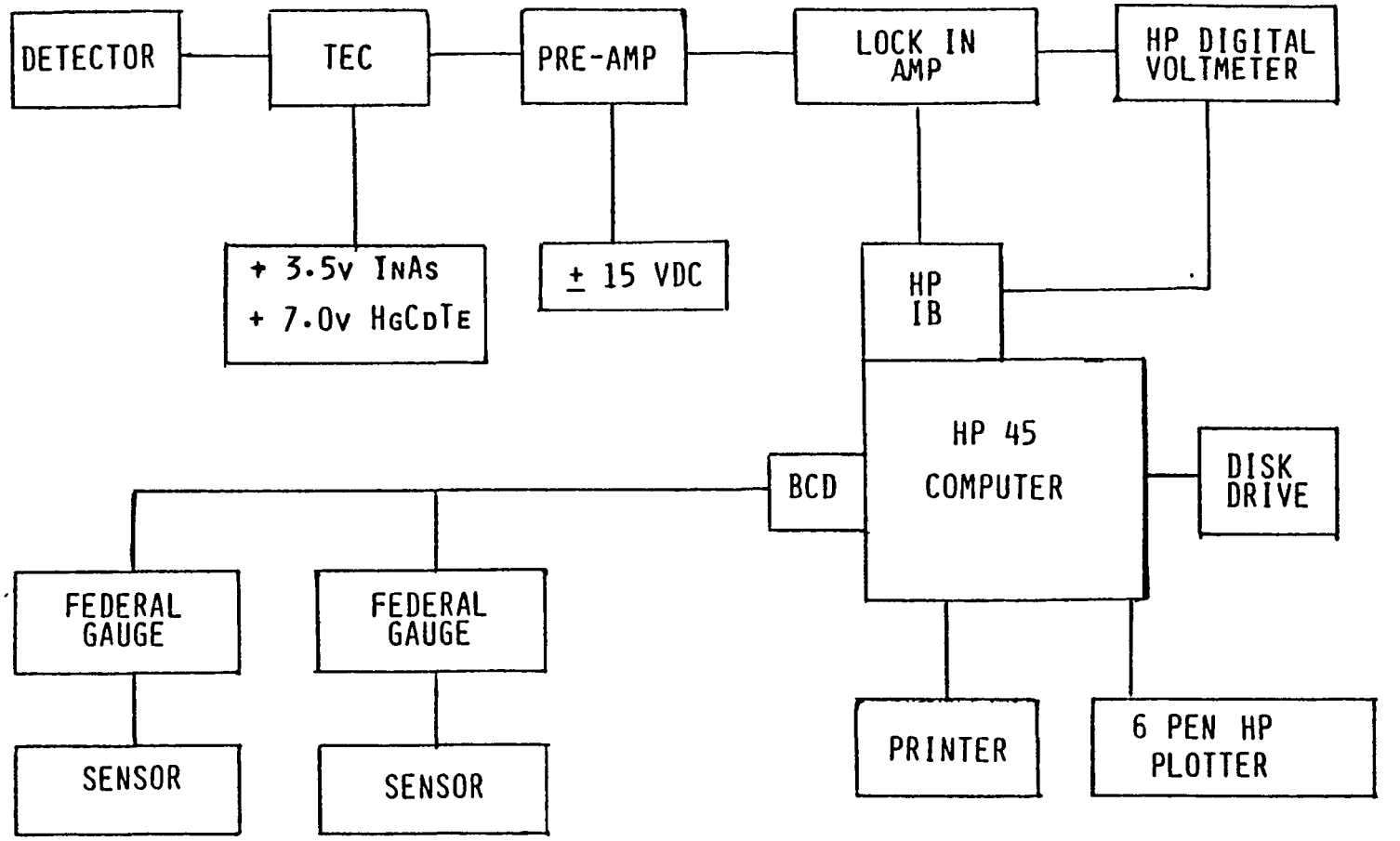

Figure 5.3.2-1, Test Setup for the Alignment of the Photovoltaic Detectors

B. Vacuum Path Detector Alignment: Repeat 5.3.3.A

C. Signal-to-Noise: Repeat 5.2.3.B for the solar signal; repeat 5.2.3.B for the AGC loop reference blackbody.

5.3.4 Procedures Required

Same as section 5.2.4.

5.3.5 Data Retained for Record

Same as section 5.2.5

5.4 Optical Cross-talk and Initial Instantaneous Field-of-View Matching for Gas Channels

5.4.1 Objectives

A. Measure the optical cross-talk. Install baffles to minimize the cross-talk.

B. Match the instantaneous fields-of-view (IFOV) between the gas path detector and the vacuum path detector.

5.4.2 Equipment and Facility

With the exception of the "x" and "y" micrometer gauges, use the same test setup as in Section 5.3. The special test fixtures necessary for these tests are as follows:

A. Beam traps which can be placed on the baffles to block the beam (cross-talk test).

B. Slit which can be scanned across the image of the HALOE field stop which is formed by the HALOE telescope and the external collimating optics near the blackbody source. Horizontal and vertical scans will be performed (IFOV matching).

5.4.3 Test Sequence

A. Optical Cross-talk

Measure the cross-talk from each "source signal" into each radiometer and GFC signal as is listed in Table 5.4.3-1. To measure cross-talk, measure the "effected signals." Block the "source signal" by installing a beam trap and measure the "effected signals" again. Size and position the baffles to minimize all types of cross-talk. To minimize gas into vacuum cross-talk, tilt the spectral filter and/or correlation gas

TABLE 5.4.3-1, HALOE OPTICAL CROSS-TALK MATRIX

Effected Signal	Source Signal HF				HCL				CH_4				NO				CO_2	NO_2	H_2O	O_3
	SG*	SV*	RG	RV	SG	SV	RG	RV	SG	SV	RG	RV	SG	SV	RG	RV				
HF SG*	X																			
HF SV*		X																		
HF RG			X																	
HF RV				X																
HCL SG					X															
HCL SV						X														
HCL RG							X													
HCL RV								X												
CH_4 SG									X											
CH_4 SV										X										
CH_4 RG											X									
CH_4 RV												X								
NO SG													X							
NO SV														X						
NO RG															X					
NO RV																X				
CO_2																	X			
NO_2																		X		
H_2O																			X	
O_3																				X

X's indicate no cross-talk possible between these signals; measure all others

*For this Table; V is vac, G is gas.

cell for that channel, as appropriate. Measure the residual cross-talk. These tests may require the use of additional spectral filters in the solar path.

B. Field-of-View Matching

The field-of-view matching tests consists of measuring the output signals generated by stepping a slit across the field stop image. The field stop image is created by the telescope and collimating mirrors and is located near the external source blackbody. Two scans will be made: in one scan, a horizontal slit is moved vertically; in the other scan, a vertical slit is moved horizontally.

C. Signal-to-Noise Ratio

Measure the S/N ratio as in Section 5.2.3.B.

5.4.4 Procedures Required

Write test procedures for the optical cross-talk test and the IFOV matching test.

5.4.5 Data Retained for Records

A. Optical Cross-Talk: Redline drawings and procedures to document the changes in the baffle size and location and tilts of optical components. Retain measurements of the residual cross-talk for all combinations measured in Table 5.4.3-1.

B. Field-of-View Matching: Data which shows the fields-of-view overlap by 99 percent in both horizontal and vertical axes. Redline drawings and procedures for any case which requires a detector relocation.

5.5 Initial System Power-Up Tests

5.5.1 Objective

Verify the performance of the flight electronics, the flight software, and the IETS for all subsystems except the pointer-tracker. These tests will:

A. Show continuity through all harnesses.

B. Show operation of signal simulators and signal loads for the PEA and GEA.

C. Verify IETS software and hardware.

D. Verify flight software for initial power on mode.

5.5.2 Equipment and Facility

For these tests, the PEA/GEA flight electronics and the IETS are integrated with the optical mainframe. The pointer/tracker is not yet integrated with the instrument. Figure 5.1-2 shows the principal features of the test setup configuration. The specialized test support equipment items are:

1. Test cable from the PEA to the GEA
2. The Gas Channel Electronic Test Set (GCETS) connected to the GEA and to the IETS.

5.5.3 Test Sequence

Each subsystem is functionally tested and the data is processed through the IETS for all operating modes. The principal steps are:

A. Power Up: The IETS executes its "self-check" software to verify all IETS interfaces with the instrument. Include tests for all parameters given in Table 5.5.3-1 as part of this test.

TABLE 5.5.3-1. VERIFICATIONS PERFORMED AS PART OF POWER-UP FOR THE IETS AND SUPPORT ITEMS

1. Verify the simulated UARS commands.
2. Verify the simulated UARS power levels.
3. Verify the simulated pointer-tracker loads and input signals.
4. Verify the decommutation of telemetry signals
5. Verify proper operation of the test equipment for the RSTS, GCETS, and the source blackbody.

TABLE 5.5.3-2 VERIFICATIONS PERFORMED AS PART OF INSTRUMENT POWER-UP

1. Verify that control logic is initialized.
2. Verify the content of analog and bi-level telemetry signals.
3. Verify that RAM is loaded from PROM and that the memory data base contains default values.
4. Verify that the calibration wheel moves to home position.
5. Verify that software is properly initialized.
6. Verify that PROM power is left on.
7. Verify that the clock frequencies are correct.
8. Verify that the chopper rotates at the proper speed.
9. Verify that the TEC temperature drops to the correct temperature when TEC power is applied (automatic).
10. Verify that the blackbody temperature increases to 1000°K when power is applied (automatic).
11. Verify that a pulse is sent to the pin pullers in response to a telescope door open command and that telemetry indicates that the door is open.
12. Verify that a pulse is sent to the gimbal pin pullers in response to a gimbal uncage command and verify that the telemetry indicates that the gimbals are uncaged.
13. Send all serial digital commands except "0" and verify instrument data base is updated correctly.
14. Send all serial digital commands necessary to initialize instrument to the desired data base.

B. Command and Response: Test all commands compatible with the system configuration. Table 5.5.3-2 lists the verifications for the initial power on mode and they provide indications through telemetry. The items for verification which show a capability to proceed with the radiometric tests include:

Instrument on/of	by	voltages and temperatures
Sunrise	by	Panel Indication
Sunset	by	Panel Indication
Door Open	by	Switch Position Indication
Door Closed	by	Switch Position Indication
Gas Balance	by	IETS File Transmitted
AGC Balance	by	IETS File Transmitted
Cal Wheel Step and Home	by	IETS File Transmitted and the Cal Wheel Moves

Each of the above cases have verification by a particular telemetry return.

C. Data Handling: Proper data handling is verified by real-time IETS decommutation and display of both housekeeping data and science data.

D. GCETS Demodulation and Monitor of Test Points. Verify the auxiliary monitoring capability provided by the GCETS.

5.5.4 Procedures Required

Procedures developed during subsystem testing will be expanded into general procedures for use in higher level system testing. These new features will include:

A. An IETS instruction manual which includes operating instructions and test support capabilities.

B. An instrument System Test Procedure with definition of telemetry limits and acceptance values (from previous tests).

C. The GCETS operation instruction manual. (HALOE-09-103)

5.5.5 Data Retained for Record

Data for each command and instrument operating mode will be retained for trend analyses. Measurements of voltage, current, and temperatures will comply with values predicted from previous testing and will verify compliance with the science requirements where appropriate.

5.6 Initial Radiometric Performance

5.6.1 Objectives

Theses tests provide the first measurements of the radiometric performance parameters of the flight instrument. The objectives are as follows:

A. Set the "radiometric set-in-test parameters" of the instrument such as the demodulator phase and the preamplifier gains. These parameters are set one time only.

B. Measure the noise, drift, and cross-talk. Isolate and eliminate sources of excess noise. These parameters are repeated as part of the Performance Verification tests.

C. Establish a baseline performance for selected radiometric parameters. These tests are repeated as part of the Performance Verification tests.

The specific tests are listed in Table 5.6.1-1, and presented in the general order of performance. The tests which are considered as part of the Radiometric Performance verification are identified.

5.6.2 Equipment and Facility

The standard configuration is shown in figure 5.1-2. The following additional items of equipment and data reduction software will be required:

1. Special test software to permit extended operation during the balance, calibration, and data sequences.
2. Special test software to permit entry into any portion of the balance, the calibration, or the data mode sequence.
3. Data recording for ancillary signals.
4. Statistical routine to provide mean value, standard deviation, and least squares curve fitting (position or time).

TABLE 5.6.1-1. INITIAL RADIOMETRIC PERFORMANCE TESTS

TEST NAME	TEST OBJECTIVE	SPECIAL EQUIPMENT	TEST ACTION	COMMENTS
1. Demodulator Phase Setting	Set the 150Hz Reference Signal Phase with Respect to the Solar Signal. Set the 300Hz Reference Signal Phase with Respect to the Blackbody Signal.	Dual Beam Oscilloscopes	Adjust Appropriate LED & Photo-detector Position to Peak the Demodulated Signal Outputs.	Wave Shape Effects. See Note 1.
2. Pre-Amp Gain Set and Potentiometer Gain Set				See Note 2.
2.a Gas Correlation Channel Initial Gain Setting	Provide the Gain Setting for V vac and V gas Pre-Amplifiers.	Known Solar Source Temperature Oscilliscope.	Adjust V vac Pre-Amp to R=4.2 volts, Trim V gas Pre-Amplifiers to $\Delta R = 0$.	Performed with AGC loop Defeated. See Note 2-1.
2.b Gas Correlation Channel Trim Balance	Provide an Initial Setting of $\Delta V = 0$.	Known Solar Source Temperature	Adjust Circuit Board (GEA) Trim Potentiometer to $\Delta V = 0$.	Performed with AGC loop Defeated. See Note 2-2.
2.c Radiometer Initial Gain Setting	Provide an Initial Setting for the Radiometric Pre-Amplifiers.	Known Solar Source Temperature.	Adjust Bolometer Pre-Amplifiers to a Value Corresponding to the Fraction of "one sun" into the telescope.	Values Defined from Comparison with Gas Channels. See Note 2-3.
2.d V Channel & Radiometer Channel Signal-to-Noise	Measure Signal-to-Noise. Isolate and Eliminate Excess Noise.	Plate to Block Radiometric Output.	Compare Measured S/N with Predicted S/N for Laboratory Conditions.	Extrapolate Measured S/N to Flight Compare with the Required S/N.
3. Calibration and Data Mode Operation				See Note 3.
3.a Balance Verification Initial ΔR at $\Delta V = 0$	Verify Stable Operation as Trimmed and with Initial AGC Control.	Known Solar Source Temperature	System Operation with AGC On, ΔV and $\Delta R = 0$. Execute Balance Mode Commands Monitor ΔV, ΔR.	ΔV and ΔR Remain as Balanced.

TABLE 5.6.1-1. INITIAL RADIOMETER PERFORMANCE TESTS (Cont'd)

3.b Measure ΔV Stability (Shift to Data Mode) Bias Offset Bias Drift Noise/NEM	Verify ΔV Measurement Capability.	Known Solar Source Temperature	Operate under Stable Input for 3, 15 and 45 Minutes while Measuring V, ΔV, for Each Channel.	See note 3-1
3.c Calibration Wheel Timing and Radiometric Response.	Verify Movement of Wheel. Confirm Adequate Dwell Time. Verify Modulation and Repeatability.	Known Solar Source Temperature	Command Wheel through Steps to Home. Monitor Telemetry and Measure V, ΔV, R and ΔR for Each Step.	Data Supports Cross-talk See Notes 3-2 and 5.
4. Balance Mode Operation				
4.a AGC Loop Time Constant	Measure the AGC Loop Time Constant	Known Solar Source Temperature	• Execute a Series of Balance Sequences While Recording V, ΔV, R, ΔR, AGC.	See Note 4.
4.b Auto Balance Time	Determine Number of Balance Algorithm Interations to Bring $\Delta V = 0$ within 1 NEM.	Known Solar Source	• Continue Balance Commands Until $\Delta V = 0$, Count Interations.	Test performed after refurbishment only.
4.c Command Balance	Verify Capability to Change the DAC Content in Each Channel by Ground Command.	Known Solar Source	• Change Content of DAC Through Command Option.	
5. Data Mode Temporal Response of the Detectors	Measure the As-Installed Response Characteristics for the Detectors, Demodulators and Filters.	Known Solar Source Plate to Block Telescope	Block and Unblock the Beam into the Telescope while Measuring V and the Radiometers.	See Note 5.
6. Cross-talk Evaluation and Elimination	Measure Cross-talk	Known Solar Source	Measure V, ΔV, R, ΔR, AGC During All Operations and Compare with previous results or complete the matrix of Table 5.4.3-1.	See Note 6.

TABLE 5.6.1-1: NOTES

1. Demodulation Phase Setting

The demodulator synchronization with the chopper requires adjustment of the LED-Photo Transistor pairs at the chopper. The finite dimensions of the beam through the chopper result in wave shapes from the detectors which show near-linear rise times and decay times. The optimum setting for the 150Hz and 300Hz to the gas correlation channels should place the LED-Photodiode switching signal at the midpoint of a rise or decay for the combined frequency wave (e.g., the midpoint on a maximum voltage excursion). The HCl channel was intended for such a timing reference. The 150Hz for the radiometer channels does not have any independent adjustment and is extracted (every other count) from the 300Hz to provide a 90 degree phase shift from the Gas Correlation timing.

2. Pre-Amp Gain Set and Potentiometer Trim

The initial settings adjust the gain for the vacuum path preamplifier to bring the R signals to their nominal values (4.2 VDC). The V signal is then compared with the source temperature. Tests after refurbishment will adjust the gain for the vacuum path preamplifier to provide a V signal at 70 percent of the A/D converter range for an exoatmospheric sun input to the telescope. (See Dynamic Range test 5.9.3.A)

2-1 The adjustment of the gas channel pre-amplifiers occur with the AGC defeated (GCETS AGC switch "off"). The R signal is first brought to 4.2 volts by adjusting the vacuum path preamplifiers, (nominal telemetry toggle of one bit). The ΔR signal is then brought to a best value of 0 (telemetry toggle of one bit) by adjusting the gas path preamplifiers.

2-2 The adjustment of the trimming potentiometer on each of the Gas Channel boards continues with the AGC defeated. The ΔV signal is brought to a best value of zero (telemetry toggle of one bit) by adjustment of the balance potentiometers (Access through holes in the GEA).

2-3 The gains for the bolometer pre-amplifiers are adjusted to the value for V which corresponds to the fraction of one sun input to the telescope at the time of the test. The value selected will also account for the known local atmospheric effects in the laboratory transmission path.

3. Calibration and Data Mode Operations:

The following tests become part of any radiometric performance verification:

3-1 ΔV Initial Bias Offset, ΔV Bias Drift, NEM and ΔR at $\Delta V=0$: After the instrument has performed a balance, measure V, ΔV, R, ΔR, and AGC for up to 45 minutes. Find the best-fit line to the data and calculate the standard deviation. The ΔV initial bias offset, expressed in volts, is the ΔV value at balance. The ΔV bias drift, expressed in volts, is the linear change in the ΔV over the time "t" where t is 3 minutes, 15 minutes, or 45 minutes, as appropriate.

The ΔV noise, expressed in volts, is the standard deviation for ΔV. To express these three values in parts per million (ppm), refer ΔV and V to a common circuit point and divide ΔV by V. The measured value of ΔR at balance is ΔR at $\Delta V=0$. During the first measurement of these three parameters, compute the power spectral density of the ΔV noise and the V noise. Verify the noise is white, not 1/f. Make these measurements as a function of the radiometric intensity into the telescope.

3-2 Calibration Wheel

Balance the GFC channels. Rotate the calibration wheel to the first filled position. Record V, ΔV, R, ΔR and AGC for 2 minutes. V and ΔV should reach a steady-state value 3 seconds after gas cell insertion. R, ΔR and AGC should not change due to the insertion of a neutral density filter or of a gas cell. Changes in R, ΔR and AGC indicate solar into blackbody cross-talk (see 6 below). Repeat these steps for the remaining calibration wheel positions.

4. AGC Loop Tests (Part of General Radiometric Performance)

For the AGC Loop Time Constant: Balance the GFC channels and allow V, ΔV, R, ΔR and AGC to reach a steady state value. Add (TBD) counts to the value in the balance DAC and continuously record V, ΔV, R, ΔR and AGC until they reach new steady-state values. Calculate the AGC Loop Time Constant. Verify that the time constant for all four AGC loops is 20 ± 2 seconds. Continue to execute the balance command until the balance algorithm brings $\Delta V=0$. Record the number of iterations required to bring $\Delta V=0$ to within the one NEM tolerance. Exercise the

command balance capability as the means to place a value in the DAC for each for the four AGC circuits.

5. Data Mode Temporal Response (Part of General Radiometric Performance)

Measure the V signals and broadband radiometer signals as a plate is rapidly removed from in front of the telescope. The voltage profile will be a convolution of the detector response time and the 0.91 Hz filters at the output of the demodulators. The operation of the Cal Wheel should provide equivalent measurements for the ΔV channel.

6. Cross Talk

For the gas channels use the data acquired in all earlier testing to calculate the correlation between the following pairs of signals.

For Each GFC Channel	For Each Pair of ΔV Signals
ΔV and V	ΔV NO and ΔVHF
V and R	ΔV NO and ΔV CH_4
V and ΔR	ΔV NO and ΔV HCl
V and AGC	ΔV CH_4 and ΔV HCl
ΔR and R	ΔV CH_4 and ΔVHF
R and AGC	ΔV HCl and ΔVHF

For all other channels:

Compare the measurements obtained from tests and complete the matrix shown as Table 5.4.3-1.

5. Power spectral density analysis of the noise.

6. Plate to block the telescope for S/N measurements and temporal response test.

5.6.3 Test Sequence

Power-on the instrument and the source blackbody. Allow reference blackbody and the solar source blackbody to stabilize in temperature before making radiometric measurements. Balance the four GFC channels before acquiring data in the calibration and data mode operation. Perform the tests in the order given in Table 5.6.1-1. A brief discussion of how to implement some of the tests is contained in the notes to Table 5.6.1-1.

5.6.4 Procedures Required

In addition to the procedures required for the initial power up (Section 5.5), procedures will be required for:

A. Demodulation Phase Setting

B. Pre-Amp Gain Setting

C. Calibration and Data Mode Operations

5.6.5 Data Retained for Records

Retain the data required to satisfy the objectives of the tests given in Table 5.6.1-1. Detailed lists of data will be included in the procedures. Where appropriate, the list will specify the required equipment calibration data and the laboratory conditions (temperature, pressure, and humidity). As before, redline procedures and drawings as appropriate to show additional testing or to indicate hardware modifications necessary to set gains, to set demodulator phase, to eliminate excess noise, or to reduce cross-talk.

5.7 Characterization Tests

5.7.1 Objectives

These tests are performed one time only in this configuration. The specific elements evaluated and characterized are:

A. Measurements of empty gas cell bias effects before cell filling. The data will provide a base-line in support of the subsequent gas response test.

B. Measure the polarization sensitivity of the optical system.

C. Measure the balance linearity of the instrument, as any effect of solar intensity on the V, and the ΔV measurements.

D. Measure the Instantaneous field- of-view for each detector and verify the matching of fields for the gas channel detector pairs.

E. Measure the out-of-field (OOF) rejection characteristics of the telescope and optical system (Off Axis Rejection).

5.7.2 The general configuration remains as shown in figure 5.1-2. Auxiliary elements required for support of their tests include:

A. Radiation Stimulus Test Set (RSTS) set up to permit insertion of gas cells without vignetting.

B. Empty gas cells.

C. Polarizers mounted to provide a preselection for the plane of polarization.

D. Slit, mount for slit, and technique for scanning slit across the field stop image for the IFOV matching and IFOV measurement test.

E. Knife-edge, mount for knife-edge, and technique for scanning knife-edge across the field stop image for the IFOV and power/balance linearity measurements.

5.7.3 Test Sequence

Power up the instrument and the solar source blackbody. Allow the on board reference blackbody and the solar source blackbody to stabilize at temperature before making radiometric measurements. Balance the four GFC channels before entering the data mode. Perform the tests in the order given in Table 5.7.3-1. A brief discussion of how to implement some of the tests is contained in the notes for Table 5.7.3-1.

5.7.4 Procedures Required

In addition to the startup and equipment operating procedures employed for previous tests, the procedure for calibration and data mode operation will be expanded to include a sequence for:

A. Insertion and measurement of empty gas cells.

B. Insertion and rotation of the polarizer.

C. Traversing the knife edge and the slit across the field-of-view.

D. Out of field rejection measurements.

5.7.5 Data Retained for Record

Retain the data required to satisfy the objectives of the tests described in Table 5.7.3-1. Detailed lists of measurements and data will be included in the procedures. Where appropriate, the list will specify the required test equipment calibration data and the recording of laboratory conditions (temperature, pressure, and humidity). As before, modifications to procedures or drawings will be included to show additional testing or to indicate hardware modifications.

TABLE 5.7.3-1. TEST CONTENTS FOR RADIOMETRIC EVALUATION AND CHARACTERIZATION

TEST NAME	TEST OBJECTIVE	SPECIAL EQUIPMENT	TEST ACTION	COMMENTS
1. Empty Gas Cell Bias*	Measure the Radiometric Response to the Auxiliary Gas Cells Prior to Filing. (Radiometric Finger Print)	Precise Position of Cell in RSTS • Known Solar Source • Known Lab Environment	Insert the Cells into the RSTS and Measure the Response for All Radiometric Channels (12 Total) Cells Measured in Positions and and Combinations Intended for Gas Response Test.	See Note 1.
2. Polarization	Measure the Sensitivity of the Gas Correlation Channels to Change in the State of Polarization.	Rotatable Polarizer Compatible with the Dimensions of the Beam.	Insert the Polarizer into the RSTS. Measure all Radiometric Channels Including ΔV as the Plane of Polarization is Rotated.	See Note 2.
3. Balance and System Linearity	Measure the effects of a linear change in solar intensity for the V signals	Knife Edge attenuator positioned in beam	Knife edge scanned across field stop to produce intensity changes at detectors. Measure radiometric responses as a function of position.	See Note 3.
4. Field-of-View Match	Verify a Common Field-of-View for All the Channels and Measure the Mismatch Between the V vac and V gas for Each of the 4 Gas Correlation Channels.	Slit Source Traversed.	Illuminate with a Slit 10% of Aperture Area. Move slit across stop field. Outputs of All Detectors and ΔV.	Test has 2 cases: Vertical Slit with Horizontal Scan and Horizontal Slit with Vertical Scan. See Note 4.
5. Out-of-Field Rejection	Measure the Radiometric V and ΔV Signals as a Function of Off-Axis Radiation.	Small Angle rotation of the telescope relative to the beam.	Telescope Fully Illuminated with Collimated Solar Beam. Telescope rotated relative to beam equivalent to a movement around the second baffle. Measure radiometric V and ΔV.	Test Limits Defined See HALOE-13-054B Out-of-Field Rejection.

* The operation of the RSTS in the beam will be verified experimentally before proceeding with these tests. Capability to insert cells polarizers, etc. will be shown.

TABLE 5.7.3-1. NOTES

1. The means for inserting the empty cell into the beam must provide both precise and repeatable positioning. The technique must control axial location, tilt and rotation. The empty cell measurements require a number of insertions and removal cycles to establish the repeatability of the data. The number and combinations will be the same as defined for the gas response test (See 5.9 Later, Gas Response Test).

2. Polarization. The polarization measurements will correlate the radiometric signals as a function of rotation angle for the polarizer. The analysis of the data will survey all measurement for change with particular emphasis on the ΔV measurements. Any measurable sensitivity to polarization will be identified and displayed. (Measurements may require monitoring of the GCETS independently demodulated signals V vac V'gas and R gas).

3. Linearity. The linearity measurements must be obtained by attenuation of the beam without altering the spectral distribution. This is accomplished by a knife edge scan across the field stop; the balance measurements will show any change in the ΔV signals as a function of intensity.

4. Field-of-view measurements will require traversing the slit across the field stop. The scan will include 20 measurements across dimensions equal to the fields-of-view centered about mid-point in the field stop.

5.8 Characterization for Spectral Response

5.8.1 Objectives

The In-band measurements will provide the fine structure transmission data and sensitivity for each of the eight channels.

A. Radiometer Channels: Measure the relative response to within 1 percent with a spectral resolution of $2cm^{-1}$.

B. Gas Correlation Channels: Measure the relative response to 1 percent within a spectral resolution of $1cm^{-1}$.

5.8.2 Facility and Equipment

The tests are performed in the facility configuration shown in figure 5.1-2, with detail modifications as required. The In-band spectral measurement will use the purged passage way which enters the clean area through the pass-through. A SPEX Model 1702 scanning monochromator will be placed into the beam of the IR source and enclosed within the purged system. Figure 5.8.2-1 shows the configuration of the monochromator installation and the instrumentation for measuring the beam energy.

5.8.3 Test Sequences

The test sequence for in-band measurements of each channel is:

A. Calibration Scans. A simultaneous recording of the signals from the calibration pyroelectric detector, the reference detector, and the position (wavelength) of the grating will relate the signal from the reference detector to the total energy in the beam as it enters the telescope.

B. Measurement Scans. Three scans across the in-band region for each channel while recording the signal from the instrument channel detector (or pair of detectors), the signal from the reference detector, and the position (wavelength) of the grating. The three sweeps are implemented as follows:

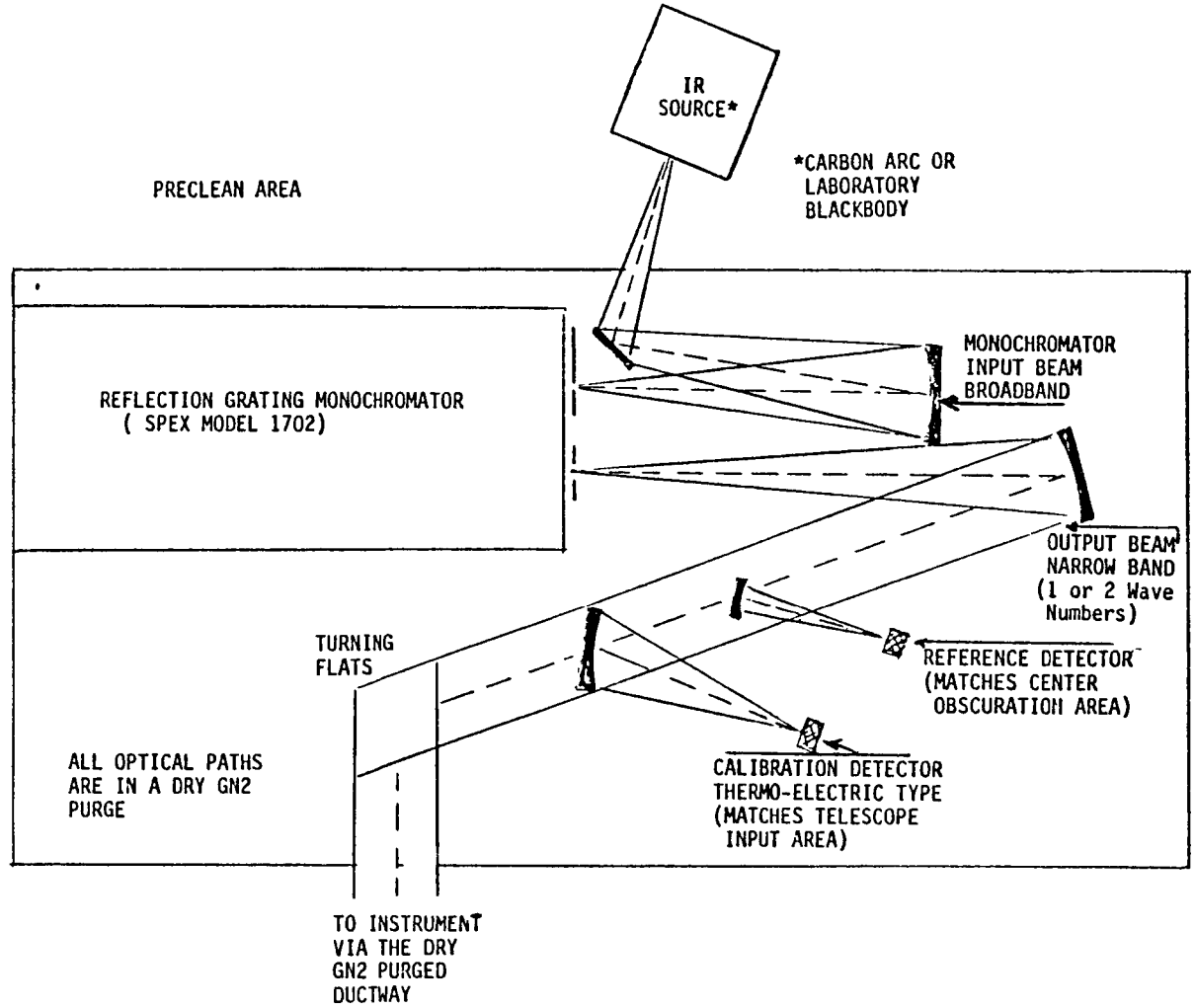

Figure 5.8.2-1, General Configuration for the Monochromator Installation

1. First sweep. Telescope field stop is filled by monochrometer.
2. Second sweep. High resolution monochrometer exit slit at one edge of the telescope field stop.
3. Third sweep. High resolution monochrometer slit at the other edge of the field stop.

5.8.4 Control Measures and Documentation

These tests will each use a detailed test procedure.

5.8.5 Summary of Results and Data for Retention

Data reduction for in-band measurements will provide:

1. Calibration Transfer. Plots and correction factors which relate the signal from the reference detector to the total energy entering the telescope as functions of wavelength.
2. Spectral Response, Uncorrected Plots. These plots will show the signal from each channel detector as a function of wavelength.
3. Relative Spectral Response. Corrections are made to the raw data to remove test-setup waveshaping. However, corrections will not be made for absorption in the atmosphere.

5.9 Dynamic Range and Gas Response Test

5.9.1 Objectives

The measurements complete the experimental preparations for interpretation of flight data. The tests provide:

A. Dynamic Range Test: Determine the gain settings for the V channel pre-amplifiers such that operations with full sun illuminations will not saturate the input to the multiplexer.

B. Gas Response Test: Radiometric measurements with known concentrations of gases in the beam. Gases are introduced singly and in combinations.

5.9.2 Test Facility and Equipment

The test facility is restored to the configuration used for the empty cell bias test. The general laboratory configuration is shown by figure 5.1-2, the particular items to be incorporated are:

A. The RSTS is included in the beam with the capability for mounting and removing gas cells (See figure 5.1-3).

B. The purge system is operating and maintaining the atmosphere constant throughout the optical path.

C. A purged enclosure will be available and placed over the instrument.

5.9.3 Test Sequence

The test sequences repeat operations performed earlier. The two elements are:

A. Dynamic Range Setting for the Pre-Amplifier.

The dynamic range setting involves a repetition of the gain setting and potentiometer trimming described previously (See 5.6, Table 5.6.1-1). The potentiometers in the pre-amplifiers for the V

channels (all 8) will be adjusted to present a predetermined V signal into the multiplexer under specific conditions for source illumination and purge control. (The value for the V signals will be draw upon calculations from previous experimental measurements.) The value will be appropriately conservative (e.g., nominal margin 15% or 0.7 volts) and relate the response from the detector and electronics to the radiant power entering the telescope. The preselected V will be based upon relative radiance plus an accounting for local absorption effects. Any setting of the V vac pre-amplifiers in the gas corelation channels will be followed by an appropriate adjustment in the V gas pre-amplifier, and any necessary retrim of the board-mounted potentiometer to re-zero the ΔV Signal

B. Gas Response Measurements

The gas response measurements consist of a systematic insertion of gas cells into the beam at the RSTS. The cells will be inserted and measurements obtained in a prescribed sequence. The selection of the specific gases, fill conditions and sequence will be defined from an ongoing analysis. The candidate conditions are summarized in Table 5.9.3-1 below.

TABLE 5.9.3-1. CANDIDATE FILL-CONDITIONS FOR GAS RESPONSE TESTING

	PRIMARY GAS CELLS		INTERFERING GAS CELLS	
	SPECIE	NUMBER OF FILL CONDITIONS	SPECIE	NUMBER OF FILL CONDITIONS
A-Initial	HCl	3	CH_4	2
B-Final (Post Refurbishment)	HCl	6	-	-
		4	CH_4	3
		1	NO_2	1
	HF	5	-	-
	CH_4	8	-	-
		1	N_2O	1
	NO	6	-	-
		1	CO_2	1
		3	N_2O	3
		1	H_2O	1
	O_3	1	-	-

5.9.4 Procedures Required

These tests will be performed according to individual procedures; however, the content of the procedure will be drawn from previous tests.

A. Dynamic Range: The procedure will be a modification to the sequence developed for pre-amplifier gain set and potentiometer trim (See 5.6).

B. Gas Response: The procedure will be an expansion and modification to the sequence developed for the empty gas cell bias (see 5.7).

5.9.5 Data Retained for Record

A. Dynamic Range: The records will include the measurements from the inputs to telemetry plus confirmation of stability (bias offset, drift, NEM) plus the laboratory ambient conditions for the beam (temperature, humidity, CO_2 content) and the calculations which defined the value for the V settings.

B. Gas Response: Measurements from each point in the matrix will be retained as a printout and as annotated tapes. These will be subject to further data reduction to support flight interpretation.

5.10 Pointer Tracker Characterization

5.10.1 Objectives

The pointer tracker characterization tests provide the measurements which confirm the operation of the system in an assembled instrument. The objectives of the test correspond those defined for the subsystem (See 4.4-1).

5.10.2 Facility and Equipment

The configuration of the clean room will be modified to include the rate table. The rate table location will allow positioning of the telescope in line with the purged passage from the laboratory blackbody source (See figure 5.1-3) and by rotation allow the instrument to operate with the beam from the Heliostat (See figure 5.1-2).

5.10.3 Test Sequence

The exact test sequence will be defined from the results of the subsystem testing (See 4.4 and 4.5). The summary of tests and measurements envisioned for the sequence appears as Table 5.10.3-1. These tests in turn will form the basis for all subsequent system tests during environmental testing.

5.10.4 Procedure Required

The tests will be controlled and executed according to a detailed procedure. The procedure will be based upon the sequences utilized during previous subsystem testing.

5.10.5 Results and Data for Record

The measurements and data generated will confirm the measurements from subsystem testing for the parameters and limits defined (See 4.4, and Test Requirements, Pointer Tracker Performance.)

TABLE 5.10.3-1. POINTER-TRACKER PERFORMANCE AND CHARACTERIZATION TESTS

TEST	MEASUREMENT OR OBJECTIVE	INSTRUMENT OPERATING MODE	ACTION	COMMENT
1. Slew a. Rate b. Position Accuracy c. Gimbal Range (Hard-Soft Limits)	Angular Rate for Slew in Azimuth and Elevation Angular Position at Completion (Characterize for Limits)	Slew Gimbals	Command Movements from Stow Position to Acquire Position and Return a. Rate Measured by Onboard Sensors and by Counter Movement of Rate Table b. Position at end Measured by Onboard Sensors and Independently From Table c. Commands Cover Full Range of Both Gimbals	Tests can be in Conjunction with Acquisition Field
2. Acquisition a. Field b. Dynamic Range c. Time d. Handshake Error	Angular Offset Range for Acquisition of the Solar Disc in Terms of Solar Intensity with Times Required for Response (Characterize to Thresholds)	Acquire Sun to Coarse Track to Fine Track	Command Movement into Solar Simulation Beam with Preselected Angular Offsets in Elevation and Azimuth; Proceed with Acquisition a. Angular offsets to Specification Limits b. Solar Intensity to Specification Limits c. Record Time to Fine Track Mode Measurements from Gimbal Position and Sunsensors	Tests can be in Conjunction with Slew
3. Tracking a. Rate and Dynamic Range b. Elevation Track Point and Error c. Azimuth Track Point and Error d. Tracking Point Change e. Pointing knowledge	Image of the Solar Source Maintained in Position While Table Rotates at Rates up to Maximum. Each axis Measured Independently (Characterize for Limits and Thresholds)	Fine Track	Command Acquisition and Tracking with Rate Table Moving at Pre-Determined Angular Velocity • Measure Coarse and Fine Sunsensor Telemetry • Measure Gimbal Positions (Telemetry) • Measure Table Positions • Measure Table Rates • Compare Table and Telemetry Data	Perform Over Range of Solar Intensities and Solar Disc Sizes
4. Solar Scans a. Scan Amplitude b. Scan rate	Elevation Angular Movements Measured Relative to the Solar Image while Tracking (Characterize to Limits and Thresholds)	Solar Scan	Command Solar Scan Mode with Rate Table Moving at Pre-Determined Angular Velocity • Measure Coarse and Fine Sunsensors • Measure Gimbal Positions • Measure Table Position • Measure Table Rate	Perform Over Range of Solar Intensities

TABLE 5.10.3-1 NOTES

1. Slew

The angular movements in response to slewing commands can proceed in both axes simultaneously, however, only the axis which corresponds to the rate table rotation will have independent verification of the rate and position. The movements will include full ranges of both gimbals and the movements can either end or begin with acquistion and track (e.g. slew to stow, or stow to acquire). Point by point comparisons of telemetry measurement and rate table measurements will show compliance with accuracy and rate limits. The measurements will include driving the gimbal into both the soft and hard limits. These limits will only have selective repetition.

2. Acquisition

The acquisition measurements will include sequences with solar movement simulated by the rate table to include both azimuth and elevation rates. The dynamic range comparisons will utilize neutral density filters interposed in the simulation beam and nominally consist of minimum, mid-range and maximum conditions. The acquisitions will include matching opposite starting points. The difference in final positioning becomes the "handshake" error.

3. Tracking

Relative motion of the solar source will be generated by rotation of the rate table at angular velocities corresponding to on-orbit conditions. Performance data showing compliance with requirements will be extracted from position measurements and telemetry from the onboard sensors. Tracking measurements will include conditions of reduced illumination.

The shifting of the track point is a change in the control software and will require use of the memory update routine.

4. Solar Scans

The solar scans will be performed with the rate table moving at velocities comparable with orbital conditions. The measurements will include operation at reduced illumination levels and solar disc sizes. Performance measurements will be extracted from comparisons of table postions, gimbal positions and sunsensors indications.

5.11 Command and Mode Operation

5.11.1 Objectives

The command and mode operating test will verify the capability of the instrument to receive and execute commands properly. In addition, the instrument is sequenced through all of its operating modes. The objective of this test is to verify proper instrument functional operation over all the command sequences and operating mode sequences. In addition, the minimum time between commands will be determined and any improper command sequence encountered will be documented.

5.11.2 Facility and Equipment

The laboratory configuration is the same as for the Pointer-Tracker tests (5.10) and the instrument operates with illumination from the Heliostat.

5.11.3 Test Sequence

Perform the sequence of commands and operating modes defined for the instrument and verify by operating telemetry. The verification sequence will repeat all of the elements defined in Tables 5.5.3-1 and 5.5.3-2 plus the execution of the "Sunset" and "Sunrise" sequences described in Tables 5.11.3-1 and 5.11.3-2.

5.11.4 Procedure

The procedure for this test will be compiled from the Initial Power-up (See 5.5), the Pointer Tracker Characterization tests (5.10) and the Initial Radiometric Performance Tests for calibration and data mode operations (5.6).

5.11.5 Data Retained

The finalized procedure plus the baseline response data from telemetry will be retained for comparison. A command/mode sequence will serve as the basic operating procedure for system performance verification tests throughout environmental testing.

TABLE 5.11.3-1. INSTRUMENT OPERATING VERIFICATIONS DURING THE SUNSET EVENT

Sunset Sequence Functional (Discrete "Sunset" Command)

- Verify the proper response to the command to slew in elevation to the stored acquisiton position.
- Verify the proper response to the command to slew in azimuth to the stored acquisition position.
- Verify azimuth and elevation of the coarse sunsensor.
- Verify CSS to FSS handshake.
- Verify that the azimuth register updates at the proper time.
- Verify that the solar acquisition is complete.
- Verify that the instrument balance is executed properly.
- Verify that the solar scans cycle is executed properly.
- Verify that the calibration cycle is properly executed (include step rate, step position, dwell time)
- Verify that the gimbals follow the track control law.
- Verify the proper operation of the event termination sequence
- Verify slew to "night stow" position.

TABLE 5.11.3-2. INSTRUMENT OPERATING VERIFICATIONS FOR A SUNRISE EVENT

Sunrise Sequence Functional (discrete "sunrise" command)

- Verify the proper response to the command to slew in elevation to the stored acquisiton position.
- Verify the proper response to the command to slew in azimuth to the stored acquisition position.
- Verify azimuth and elevation acquisition capability of the CSS.
- Verify elevation CSS to FSS handshake.
- Verify that the azimuth position register updates at the proper time.
- Verify that the solar acquisition is complete
- Verify that the gimbals follow track control law.
- Verify the proper operation of the event termination sequence.
- Verify that the instrument balance is executed properly.
- Verify that calibration sequence is executed properly (include step rate, step position, dwell time).
- Verify solar scans are executed properly.
- Verify slew to day stow position.

6.0 INSTRUMENT ENVIRONMENTAL TESTING

6.1 General Considerations, Instrument Acceptance

The Instrument Environmental Testing provides the combination of performance data and environmental exposures necessary to complete the initial acceptance sequence and thereby establish a flight capable system. The successful completion of the environmental testing provides the basis for proceeding with the refurbishment of the instrument and the eventual delivery for spacecraft integration. Figure 6.1-1 shows the sequences and general content for each of the individual tests or operations that constitute the environmental testing: Table 6.1-1 summarizes the pretest requirements, the test protocols and the requirements for the data from each test or measurement. Each environment or move between facilities will have a performance verification test performed to the level which can assure the integrity of the system operation. The in-depth performance evaluation occur at the beginning and end of the environmental test sequence. The performance verifications which precede and follow each of the principal environmental exposures will be performed in the HALOE clean room and utilize the laboratory configuration established at the completion of the integration tests. The environmental exposures and supporting measurements will be performed in special facilities configured for the environment (e.g., screen room, shaker, chamber). Each of the tests will be controlled by a detailed procedure, however, all procedures will draw upon previous data or related test experience.

The combination of integration and environmental testing generates the data base which satisfies the test requirement defined for flight acceptance of the instrument. Table 6.1.2 summarizes those requirements and identifies the individual test operations which will produce the elements of data.

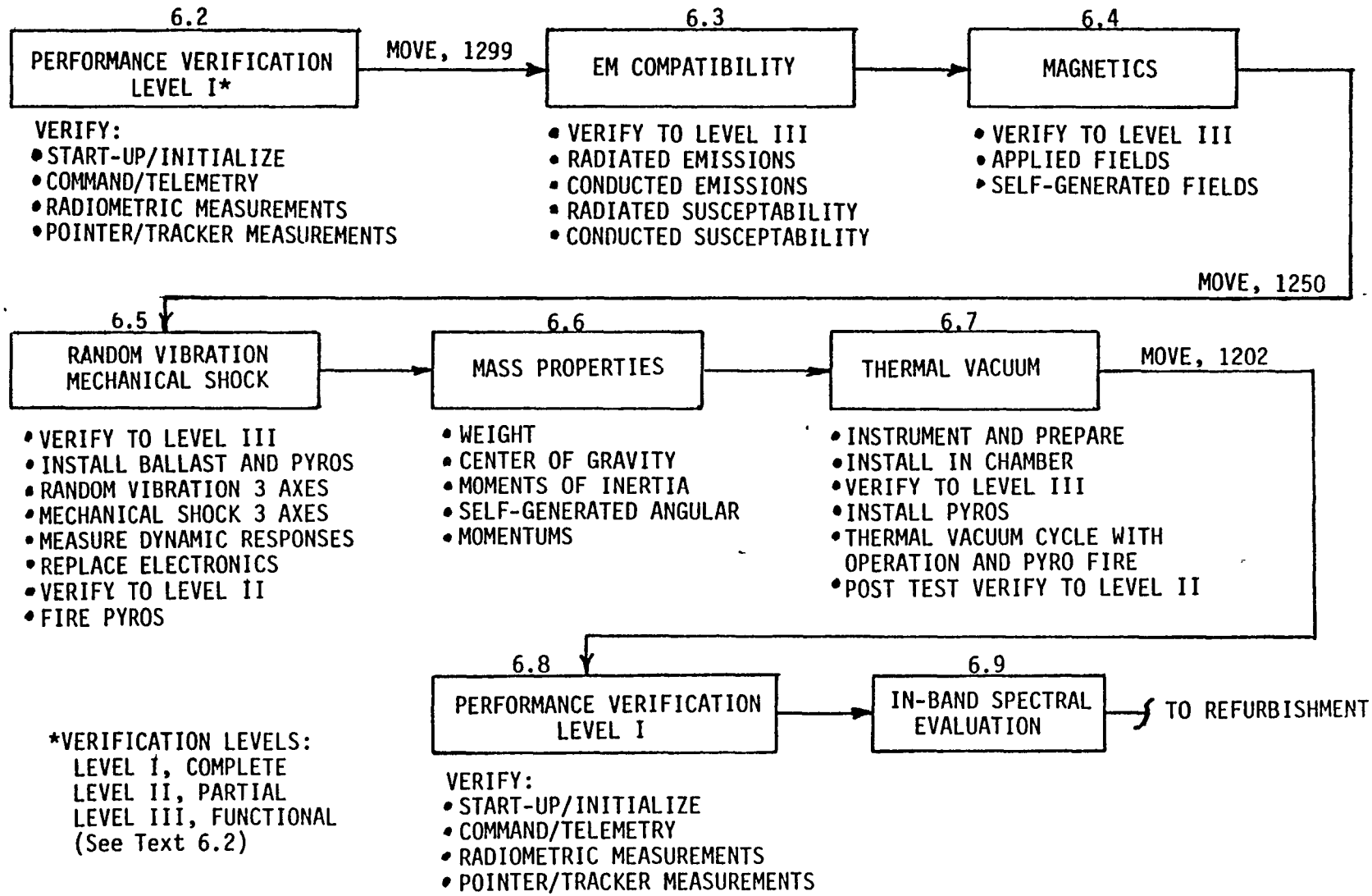

Figure 6.1-1, Flow of Tests and Events for HALOE Environmental Testing

6.1-1. SUMMARY OF OPERATIONS PERTINENT TO INSTRUMENT ENVIRONMENTAL TESTING

Concern \ Test	Performance Verification Level I 6.2	EMC Compatibility 6.3	Magnetics 6.4	Random Vibration Mechanical Shock 6.5
Precursor or Test Result Required	Complete Integration and Command Mode Operation	Complete Performance Verification Level I	Complete EMC	Complete Performance Verification Level I
Test Configuration plus any Special Support	System Test in 1202 • GCETS • RSTS, Gas Cells • Slit Source, Knife Edge • Rate Table • Heleostat	System Operation in Shielded (screen) Room • Instrument/IETS • Portable Radiation Sources • Radiating Antennas • Receiving Antennas • Input Coils • Monitor Coils	System Operation in Shielded (screen) Room • Instrument/IETS • Portable Radiation Sources • Magnetic Field Coils • Magnetometers	Instrument/IETS Portable Radiation Service • Shaker • Adapter Fixtures • Accelerometers and Recorders • Pyros
Procedures Utilized *Indicates New or Single Purpose Item	• System Test; IETS, RSTS, GCETS, Rate Table, Heliostat	System Test * EM Environments and Measurements	System Test * Magnetic Fields Application and Measurement	System Test * Random Vibration and Mechanical Shock
Data Reduction Support Software	• Telemetry Display • Statistical Extracation NEM, etc. • Plot	• Telemetry Display • Radiation measurement data record, display, plot	• Telemetry Display • Magnetic Field Measurements display and plot	• Telemetry Display • Statistical Extraction • Vibration Shock Data Reduction for PSD
Data for Record	• Instrument Performance to Specification plus Thresholds and Limits	• EM measurements from instrument • Operation in EM fields	• Operation In Field • Generated Fields	• Instrument Operation • Vibration and Shock responses as a function of frequency (PSD)
Data Susequent Utilization	• Data Base for Later Comparison	• Validation, confirmation of EM environments	• Validation confirms compatibility with magnetic field environmental conditions/limits	• Validation of vibration and shock capability

TABLE 6.1-1. SUMMARY OF OPERATIONS PERTINENT TO INSTRUMENT ENVIRONMENTAL TESTING (Cont'd)

Concern \ Test	Mass Properties 6.6	Thermal Vacuum 6.7	Performance Verification Level I 6.8	In-Band Spectral Evaluation 6.9
Precursor or Test Results Required	Complete Performance Verification Level I	Complete Performance Verification Level I	Complete All Environmental Tests	Complete All Tests
Test Configuration plus any Special Support	Instrument and PEA • Center of Gravity Scale • Pendulum Rig for Inertias • Rate Table, Momentums	Instrument/IETS • Thermal Vacuum Chamber • Chamber Support Fixture • Solar Simultations • Handling Equipment	Same as 6.2	Same as 5.8
Procedures Utilized *Indicates New or Single Purpose Item	* Mass Properties Measurements	System Test * Thermal Vacuum Operations	Same as 6.2	Same as 5.8
Data Reduction Support Software	Algorithm to extract C.G. and Inertias from measurements	• Telemetry display • Auxiliary temperature record, display • Statistical Extraction • Plot	Same as 6.2	Same as 5.8
Data for Record	Weight Center of Gravity, Inertias, Angular Momentums	• Operation under vacuum • Temperature distribution measurements • Pin puller operation in vacuum	Same as 6.2	Same as 5.8
Data Subsequent Utilization	Instrument integration to UARS	• Validation of TV environment • Update thermal model	Data for Comparison with 6.2 and Interim Level II and Level III Tests	Data for Comparison to results from Initial In-Band (5.8)

TABLE 6.1-2, SUMMARY OF OPERATING VERIFICATION TESTING

Test Section	5.5	5.6	→	5.7	→	5.8	5.9	→	5.10	5.11	6.2	6.3	6.7	6.5	6.4
OPERATING MODES / TESTS	Initial Power On	Demod Phase Set	GC Pot Trim	Cal/Data Mode	Crosstalk	Empty Cell Bias	Polarization	Balance/Linearity	IFOV/OOF	In-Band Spectral	Dynamic Range	Gas Response	P/T Characterization	Command/Mode	Perf. Verif.	EMI	T/V-T/B	Vib/Shock	Magnetics
Power On	X	X	X	X	X	X	X	X	X	X	X	X	X	X	X	X	X	X	X
Command Cal Wheel Step	X			X	X		X	X			X	X		X	X	X	X	X	X
Auto Cal Wheel Step														X	X	X	X	X	X
Command Balance	X			X	X	X	X	X	X	X	X	X		X	X	X	X	X	X
Auto Balance													X	X	X	X	X	X	X
Slew to Initial Position													X	X	X	X	X	X	X
Coarse Azimuth													X	X	X	X	X	X	X
Coarse Azimuth and Elevation													X	X	X	X	X	X	X
Fine Acquisition													X	X	X	X	X		X
Track													X	X	X	X	X		X
Scan													X	X	X	X	X	X	X
Slew to Stow													X	X	X	X	X	X	X
Sunrise Sequence													X	X	X	X	X	X	X
Sunset Sequence													X	X	X	X	X	X	X
Memory Update													X	X	X	X	X	X	X
Uncage Gimbals													X	X	X	X	X	X	X
Telescope Door Pin Pulled													X	X	X	X	X	X	X
Heaters and Heater Controllers																	X		
POINTER/TRACKER																			
FSS Diod FOV													X		X				
Slew Rate													X	X	X	X	X	X	X
Slew Position Accuracy													X	X	X		X		
Acquisition FOV													X		X		X		
Acquisition Dynamic Range													X		X				
Acquisition Time													X		X		X		X
Scan Amplitude													X		X	X	X		
Track Rate													X						
Track Accuracy													X		X				
Track Dynamic Range													X		X				
Az Track Point													X		X		X		
Pointing Knowledge													X		X				
Az Track Dynamic Range													X		X				
El Track Accuracy													X		X				
El Track Point													X		X		X		
El Track Dynamic Range													X		X				
Pointing Knowledge													X		X				
Gimbal Range													X		X		X		
Telescope / SS Alignment													X		X		X		
Telescope / SS Boresight Stability													X		X		X		

TABLE 6.1-2, SUMMARY OF OPERATING VERIFICATION TESTING (Concluded)

RADIOMETRIC TEST REQUIREMENTS \ TESTS	INITIAL POWER ON (5.5)	DEMOD PHASE SET (5.6)	GC POT TRIM (5.6)	CAL/DATA MODE (5.6)	CROSSTALK (5.7)	EMPTY CELL BIAS (5.7)	POLARIZATION (5.7)	BALANCE/LINEARITY (5.7)	IFOV/OOF (5.8)	IN-BAND SPECTRAL (5.8)	DYNAMIC RANGE (5.9)	GAS RESPONSE (5.9)	P/T CHARACTERIZATION (5.10)	COMMAND/MODE (5.11)	PERF. VERIF. (6.2)	EMI (6.3)	T/V-T/B (6.7)	VIB/SHOCK (6.5)	MAGNETICS (6.4)
TELEMETRY CHANNEL VERIFICATIONS	X			X	X			X			X	X		X	X		X		
DEMODULATOR PHASE SET/MEAS.		X																	
ANALOG S/N MEAS. SCIENCE			X		X														
DYNAMIC RANGE SET-SCIENCE		X	X								X				X				
AGC TIME CONSTANT MEAS.				X				X			X	X			X	X	X		X
SOLAR-TO-REF/ REF-TO-SOLAR CROSSTALK		X			X			X			X				X				
ΔR AT ΔV = 0			X	X	X	X	X	X	X	X	X	X	X	X	X	X	X	X	X
ΔR TO ΔV CORRELATION			X	X	X	X	X	X	X	X	X	X	X	X	X	X	X	X	X
ΔV NEM			X	X	X	X	X	X	X	X	X	X	X	X	X	X	X	X	X
ΔV BIAS OFFSET			X	X	X	X	X	X	X	X	X	X	X	X	X	X	X	X	X
ΔV DRIFT			X	X	X	X	X	X	X	X	X	X	X	X	X	X	X	X	X
MODULATION SCALE FACTOR												X			X		X		
MODULATION SCALE FACTOR REPEATIBILITY												X			X		X		
MODULATION BIAS ERROR-CAL WHEEL				X				X				X			X		X		
V CHANNEL PRECISION				X				X			X	X			X				
CAL WHEEL GAS CELL REPEATIBILITY				X	X	X	X	X	X	X	X	X	X	X	X	X	X	X	X
CAL WHEEL ND FILTER REPEATIBILITY				X	X	X	X	X	X	X	X	X	X	X	X	X	X	X	X
CAL WHEEL DWELL TIME				X	X	X	X	X	X	X	X	X	X	X	X	X	X	X	X
TEMPORAL RESPONSE				X											X	X	X		X
EMPTY CELL BIAS TEST SETUP SENSITIVITY				X															
EMPTY CELL MODULATION BIAS						X													
GAS RESPONSE												X			X				
POLARIZATION RESPONSE							X												
BALANCE VS INTENSITY								X				X			X				
LINEARITY								X				X			X				
IFOV ALL CHANNELS									X						X				
OUT-OF-FIELD RESPONSE									X										
IFOV MATCHING ALL CHANNELS									X						X				
IN-BAND SPECTRAL RESPONSE										X									
OUT-OF-BAND SPECTRAL RESPONSE																			
CROSSTALK, SYSTEM LEVEL		X			X										X				
TEMPORAL RESPONSE																	X		
INSTRUMENT SELF-EMISSION, IR																	X		
SOLAR REJECTION									X								X		
RADIATIVE/CONDUCTIVE EMI EMIS/SUSCEPT																X			X

6.2 Performance Verification Test (Level I)

6.2.1 Objectives

The Performance Verification Tests Level I, represent a comprehensive exercise of the instrument through all operating modes and on-orbit functions plus radiometric and pointer tracker measurements that show compliance with specification defined limits, tolerances or statistical distributions. The specific objectives make a continuing confirmation or verification of measurements covering:

A. IETS turn-on of the instrument and application of regulated power to all non-pointer/tracker subsystems and electrical components such as heaters, thermistors, etc.

B. IETS control which can switch the instrument through the sequence of operating modes.

C. Data handling compatibility with all input signals and IETS compatibility with all instrument telemetry data processing and data formatting requirements.

D. IETS decommutation of telemetry to provide usable data and measurements.

E. The radiometric performance measurements required for acceptance.

F. The pointer/tracker performance measurements required for acceptance.

6.2.2 Facilities and Equipment

The performance verification testing will utilize the clean room configuration established at the end of integration testing (See figure 6.2.2-1). The principal features become:

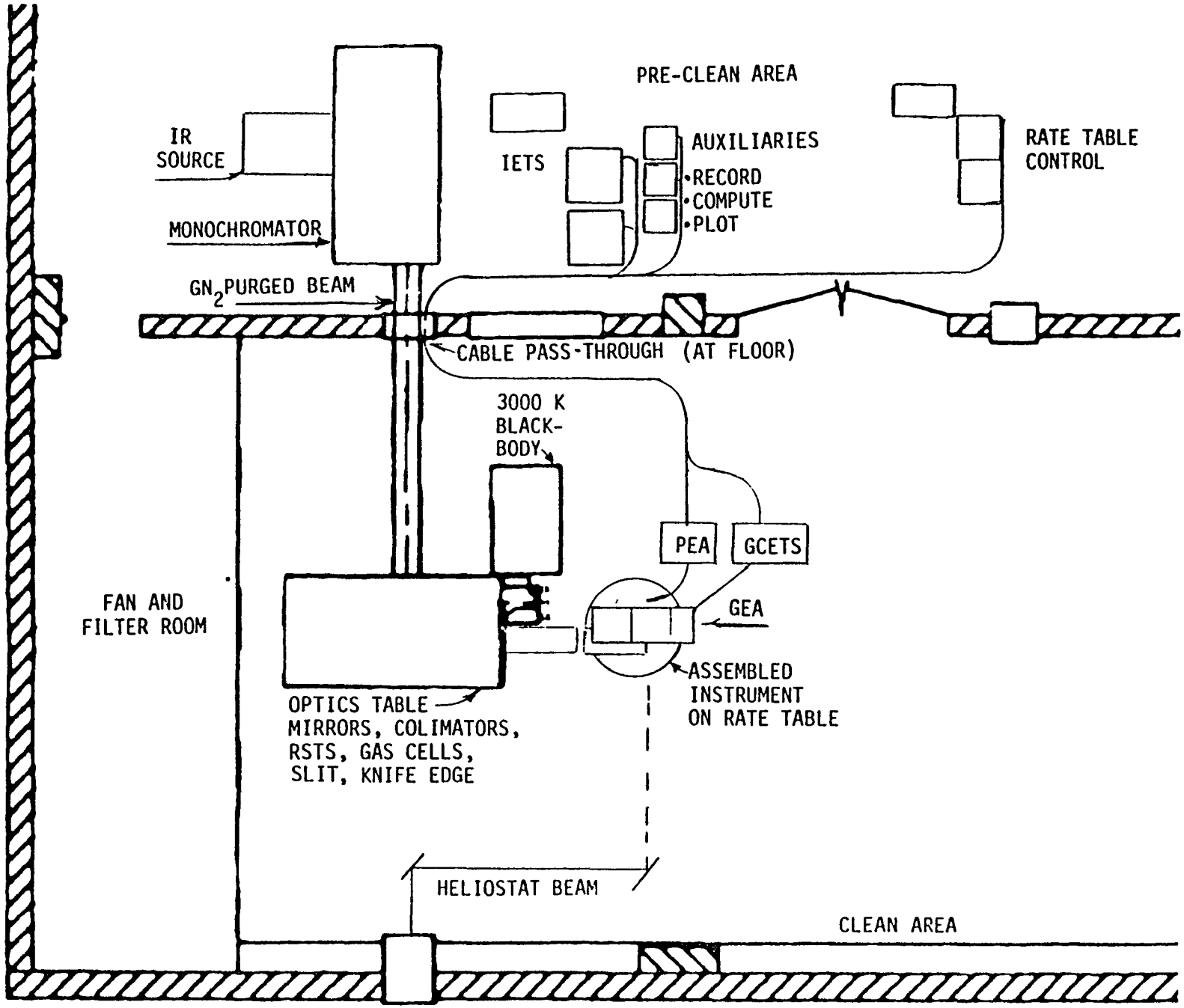

Figure 6.2.2-1, Laboratory Configuration for System Testing

A. The assembled instrument will be mounted on the rate table, fixtures will permit rotation about the azimuth and in elevation axes (instrument can be shifted 90°). The handling fixtures will be in-place and available.

B. The IETS and rate table control systems will be installed in the preclean room.

C. Radiometric tests will be performed with the azimuth axis vertical and have the telescope aligned with the beam from the laboratory source. The RSTS will be used during portions of the radiometric tests (See Figure 5.1-3).

D. Pointer/tracker measurements will use the heliostat (or solar simulator) with the instrument oriented azimuth axis vertical and elevation axis vertical.

E. Auxiliaries in the clean room will be retained as during integration testing (e.g., GCETS, oscilloscopes, meters, etc.)

6.2.3 Test Sequence

The test sequence will represent an integrated combination of the steps and measurements exercised during instrument integration as a comprehensive end-to-end operation. The measurements anticipated as elements of the sequence appear summarized as Table 6.2.3-1 with the radiometric and pointer tracker measurements integrated for a "best use" of time available. These tests form the base for the less comprehensive performance verifications performed in conjunction with moves or environments. Level II Performance Verifications are summarized in Note 1; Level III Performance Verifications are summarized in Note 2:

TABLE 6.2.3-1. CONTENTS OF THE PERFORMANCE VERIFICATION TESTS LEVEL I

MEASUREMENT	METHOD	SOURCE-REFERENCE OR COMPARISON
1. START-UP AND INITIALIZE		
a. Power up IETS and Verify Software	a. Apply Power to the IETS and Exercise Internal Monitor Capabilities	a. See Initial Power-up (5.5), and Command Mode Operation (5.11)
b. Verify Test Support Items Operating	b. Apply Power to External Items, Verify Operation	
c. Apply Power to Instrument and Verify Software	c. Apply Power to Instrument and Monitor Telemetry for Response. Verify Memory Locations for Correct Values	
d. Verify Operating Equilibrium Conditions	d. Verify Equilibrium Temperatures, Power Status and Frequencies	b. Temperatures for TECs, Blackbody, Voltages and Current Steady, Chopper Wheel Speed, Clock Frequencies
2. COMMAND/TELEMETRY		
a. Update Memory Locations Sunset/Sunrise Sequence	a-b. Memory load by IETS, Verify by Telemetry	a. See Command Mode Operation 5.11
b. Exercise Pulse Commands, Verify Operation		b. Note: Live Pyros are disconnected during during Checkout Phase of Testing
c. Exercise Sunset Sequence d. Exercise Sunrise Sequence.	c-d. Instrument acquires Heliostat or Sunsensor Solar Simulator, Radiometric Data are indications only Telemetry Confirmation of each step.	c-d. See Command Mode Sequence, 5.11,

TABLE 6.2.3-1. CONTENTS OF THE PERFORMANCE VERIFICATION TESTS LEVEL I (Cont'd)

MEASUREMENT	METHOD	SOURCE-REFERENCE OR COMPARISON
3. RADIOMETRIC MEASUREMENTS		
a. Perform Balance mode Measurements to Verify the Time Constant for the AGC Loop; the Command Capability to load the DAC, and the number of interations needed for the balance algorithm to bring $\Delta V=0$.	a. Execute Balance Sequences by Both Command and Algorithm Mode. Measure Radiometric Channels and times to reach Equilibrium.	a. Test Repeats Initial Radiometric Measurements, see 5.6. (Note: Algorithm balance iterations performed during post refurbishment testing only).
b. Execute a Calibration Sequence for all Channels Which Measures the Movements, timing and response for all channels to all the elements in the wheel. Review for cross-talk effects.	b. Execute the Calibration Commands, Measure Outputs.	b. Test Repeats Initial Radiometric Measurements for the Operation of the Calibration wheel and evaluation for cross-talk effects.
c. Data Mode Steady State Performance verification. Determine: ΔR when $\Delta V = 0$ ΔV bias offset drift noise and calculate NEM	c. Enter data mode and record $V, \Delta V, R, \Delta R$ and radiometric outputs for periods of 3, 15 and 45 minutes.	c. Test repeats Initial Readiometrics for steady state operation.
d. Data mode operation, interrupted beam. Verify temporal response and evaluate for cross-talk	d. Block and unblock the beam into the telescope. Measure $V, \Delta V, R, \Delta R$ and output of radiometers.	d. Repeat temporal response test from Initial Radiometrics
e. Data Mode Limited Gas Comparison: Measure and compare the effects from combinations of cells inserted in the beam.	e. Insert a series of gas cells into the beam while operating steady state in the data mode.	e. Test is a partial repeat of the gas comparison sequence (see 5.9). Combinations for test will be selected after initial sequence.
f. Data mode measurements with RSTS out of the beam. Verify the radiance, linearity, and field-of-view match.	f. Measure $V, \Delta V, R, \Delta R$ during a knife edge scan of the beam. Measure V and ΔV during the traverse of a Slit across the field of view.	f. Test repeats radiance linearity and field of view match, see 5.7.

TABLE 6.2.3-1. CONTENTS OF THE PERFORMANCE VERIFICATION TESTS LEVEL I (Cont'd)

MEASUREMENT	METHOD	SOURCE-REFERENCE OR COMPARISON
4. POINTER/TRACKER MEASUREMENTS		
a. Measure slew rates position accuracy and gimbal range. Verify hard and soft limits.	a. Command movement and measure.	a. Test repeats "slew" portion of pointer/tracker characterization. See 5.10.
b. Verify required performance with low intensity source for acquisition field, time and handshake error.	b. Execute acquire sun with coarse and fine track at solar intensities that include lower design limit.	b. Repeat acquisition portion of characterization test (see 5.10). Extend to thresholds.
c. Verify tracking in both azimuth and elevation at solar intensity levels which include design limits.	c. Execute fine track mode operation.	c. Repeat lower intensity and changes in solar disc size measurement from 5.10.
d. Verify rates and amplitude for solar scans that include intensities at lower design limit.	d. Execute solar scan while tracking in both azimuth and elevation.	d. Repeat portions of measurements from 5.10 which includes lower design intensities and changes to solar disc.

Table 6.2.3-1 (Concluded)

NOTE 1. CONTENTS OF PERFORMANCE VERIFICATION TESTS TO LEVEL II

1. Start up and Initialize: Repeat as for Level I

2. Command Telemetry: Repeat as for Level I

3. Radiometric Measurements Using the Portable IR Source:
   a. Balance Mode: Repeat as for Level I.
   b. Calibration Sequence: Repeat as for Level I.
   c. Data Mode-Steady State: Repeat for Level I.
   d. Data Mode Interrupted Beams: Repeat as for Level I.
   e. Data Mode Gas Comparison, Radiance Linearity, Field of View: Omit

4. Pointer-Tracker Measurements; Portable Source, No Rate Table
   a. Slew rates and gimbal range: Command and monitor by telemetry
   b. Aquisition, time, field, handshake error: Command into field and acquire, Intensities to lower specification limit
   c. Tracking: Omit
   d. Solar Scans: Perform at solar intensities including lower specification limit.

NOTE 2. CONTENTS OF PERFORMANCE VERIFICATION TESTS TO LEVEL III

1. Start up and initialize: Repeat as for Level I
2. Command Telemetry: Repeat as for Level I
3. Radiometric Measurements using Portable IR Source:
   a. Balance Mode: Command balance only
   b. Calibration Sequence: Measurements for trending comparison
   c. Data Mode Steady: Perform for 3 and 15 minutes only; Data for trending.
   d. Data Mode Interrupted Beam: Measure temporal response for trending comparisons.
4. Pointer-Tracker Measurements using a portable source; No Rate Table
   a. Slew Rates and Gimbal Range: Command and monitor by telemetry
   b. Acquisition time, field, handshake error: Command into field and acquire, one solar intensity only
   c. Tracking: Omit
   d. Solar Scan: Perform at one solar intensity.

6.2.4 Procedure Required

The performance verification tests will utilize a procedure compiled from previous results and experiences. The same procedure with modifying options as necessary will control all of the repetitions for the instrument. The list of control documents for the performance verification test becomes:

A. The system test procedure for the instrument

B. The IETS operating instructions

C. The rate table operating instructions

D. The heliostat and blackbody source operating instructions

E. The RSTS operating instructions

F. The GCETS operating instructions

6.2.5 Data for Record

The data for record will consist of the validated system test procedure supplemented by telemetry data which shows:

A. Power up and initialization

B. Flight software verification

C. Sunset sequence functional operation

D. Sunrise sequence functional operation

E. Radiometric performance

F. Pointer/tracker performance

G. Power down and shut-off

6.3 Electromagnetic Compatibility Tests

6.3.1 Objectives

A. Measure the radiated emission from the instrument and show a 6db margin below the limits defined for the UARS.

B. Measure the conducted emissions on the UARS interconnections and show a 6db margin below defined limits.

C. Demonstrate the radiated susceptability margin by operating successfully during an illumination by RF fields equal to the shuttle bay environment.

D. Demonstrate conducted susceptability margin by operating with RF interface riding on the UARS interconnects at levels 6db above the defined environment.

6.3.2 Facility and Equipment

The electromagnetic compatibility measurements will be performed in a shielded room (LaRC Bldg. 1299) with provisions incorporated to maintain cleanliness of the instrument. Radiation sources for the telescope and sunsensor will utilize portable simulators (PRSTS). The IETS/Instrument System will utilize simulators for the pyro-initiators which will have the capability to monitor induced currents. The test-particular items will include equipment to provide:

1. Detection and measurement of radiated emissions over the frequency range 10KHz to 18GHz by means of antennas, detectors, and spectrum analyzers.
2. Detection and measurement of conducted noise over the frequency range 20Hz to 60MHz by means of sensing coils, detectors, and spectrum analyzers.

3. Signal generators, amplifiers, antennas, and input coils to be used with control equipment for generating or irradiating electromagnetic noise over the frequency range 14KHz to 20GHz.

6.3.3 Test Operations and Test Sequence

The test begins with Level III performances verification (See Table 6.2.3-1 Note 2) and then proceeds with four principal measurements or operating evaluations; the applied environments and limits for self generated EMC effects are contained in Test Requirements HALOE-13-054A (see Section 3.8.1 - Electromagnetic Compatibility).

A. Instrument Radiated Environment Measurement. The electromagnetic radiation environment of the operating instrument will be measured and recorded over the range 10KHz to 18GHz at band widths as specified. The result will be compared with requirements for compliance. The radiated levels at each frequency which will be used to show compliance, will represent the worst case operating condition for emissions at that frequency. The compliance data presented is expected to represent a mosaic of operating modes across the frequency spectrum (e.g., sources from stepper motors, clocks, telemetry, etc.).

B. Instrument Conducted Emissions at System Interconnects. The DC power leads which interconnect the instrument and the IETS will be instrumented to measure noise content riding on the power lines. Noise will be measured narrow-band and broad-band while the instrument operates in all modes. The measurements will be compared against requirements.

C. Shuttle Bay Radiation Environments. Since the radiation environment in the payload bay exceeds the conditions associated with UARS flight, the instrument will be subjected to the environment in both the survival and operating (data taking) modes. The demonstration of an operating capability undisturbed by the radiation environment will provide verification of shuttle compatibility and operating margin against the on-orbit conditions.

D. Conducted Susceptability. The instrument will be operated in all modes while subjected to conducted interferences at levels 6db above the limits defined for the UARS.

6.3.4 Documentation and Controls

The test will be controlled by procedures which describe instrument operation and electromagnetic environment applications. Procedures will include:

1. Specific sketches and instruction for the test set-up and interconnection.
2. Instrument System Test Procedure which has been appropriately modified.
3. EMI/EMC facility and equipment operating procedures.

6.3.5. Summary of Data

Data for record will include:

A. Radiated emission levels shown in terms of frequency as measured, with broad-band and narrow-band measurements superimposed upon the limit definition curves. The curves will be annotated to identify the operating modes of the instrument which produced maximum noise.

B. Conducted emission measurements, both broad-band and narrow-band, superimposed upon the limit definition curves. The curves will be annotated to identify the operating mode which produce maximum noise.

C. Radiated compatibility measurements of fields applied, and annotated records from telemetry showing no changes. Data will be supplemented by current measurements from initiators or pyro-simulators recorded during the exposure.

D. Conducted compatibility showing measurements of noise injected onto the interconnecting lines with annotated records from telemetry showing no changes.

6.4 Magnetic Field Compatibilities

6.4.1 Objectives

A. Show an undegraded instrument operating capability in the presence of a 2 gauss field plus an unperturbed operating capability after an exposure to a 35 gauss field.

B. Show an operating compatibility with the magnetic field conditions presented by the UARS magnetic torquer elements.

C. Verify the self-generated magnetic field has a measurable margin below the dipole moment and intensity limits defined for the UARS.

6.4.2 Facility and Equipment

The testing will continue in the shielded room utilized for electromagnetic compatibility. The additional items required to measure the effects of magnetic field include:

1. Magnetic field coils capable of applying 35 gauss steady state over the entire instrument. The coils will have control which will permit any intermediate level as required (e.g. 2 gauss).
2. Electromagnets to simulate torquer effects. Magnets must have the capability to produce a local field in the vicinity of the instrument up to a level of five gauss. (Position of the instrument assures a minimum distance of approximately three feet from the closest torquer magnet).
3. Instrumentation for measuring and recording magnetic field intensities.

6.4.3 Test Content

The magnetic effects sequence begins with a Level III Performance Verification (See Table 6.2.3-1 Note 2). The conduct of the magnetic compatibility measurements recognizes the limited quantities of ferromagnetic

materials within the instrument and the designed-in requirement for shielding. The test presumes an insensitivity to magnetic field effects, and will consist of showing an operating capability with an applied field up to 35 gauss followed by a mapping of the residual fields from a moving instrument.

A. Operation in an Applied Field

The instrument will be brought into an operating mode ready to receive a sunset command. A field level of two gauss will be applied and the instrument cycled through a sunset event with telemetry data monitoring motions, cal wheel operations and particularly the noise parameters (initial bias, bias offset, drift, NEM). The field will be reversed and the sequence repeated. Upon completion the same sequence will be repeated with fields applied in five gauss steps up to a maximum of 35 gauss.

B. Residual Field Mapping

Magnetometers or equivalent low intensity field measurement instruments will be mounted 180 degrees apart in a horizontal plane through the elevation gimbal axis at a distance which clears the end of the telescope by 24 inches. The instrument will be operating and slewed 180 degrees in azimuth while executing a sinusoidal motion in elevation. The residual magnetic field will be measured during the motion and recorded as a function of gimbal position (two magnetometers will provide 360° coverage).

The mapping will continue for magnetometers placed at the same radial distance at 45° above and below the horizontal plane swept by the axis of the elevation gimbal. The measurements will be reviewed for compliance with requirements. If additional data

appears necessary, the traverses can be completed at ±30°, ±60° and +90° from the plane.

C. Optional Measurement for Local Field Effects (Torquer Magnets). A review of the instrument position on the UARS relative to the locations defined for the torquer magnets will establish the anticipated operating environment in terms of field intensity and direction. These data will define the positioning and excitation conditions for the laboratory electromagnets to establish equivalence. The instrument will be operated within that field and optionally, repeated at field strength two times anticipated levels.

6.4.4 Documentation and Control

The magnetic measurements will be defined and controlled by a combination of two procedures.

A. Instrument operation; control from the system test procedure selectively edited for these tests.

B. Application and control of fields; defined and controlled by a facility operating procedure containing instructions for the application of fields and the measurements of fields.

6.4.5 Data Retained for Record

The data retained for record will include:

A. Annotated tapes showing an unperturbed instrument operation in applied fields from 2 to 35 gauss.

B. Measurements From External Field Traverses showing either: Compliance by indication of maximum condition points below 0.1 gauss (Direction of Field correlates to less than 2500 pole cm.)

Contour plots of intensity and magnetic field direction. The selection of presentation will be determined after the traverse data has been obtained.

C. Option Requirement

Annotated tapes showing unperturbed instrument operation in the presence of torquer magnetic fields.

6.5 Random Vibration and Mechanical Shock Tests

6.5.1 Objectives

The random vibration and mechanical shock environments for the instrument corresponds to the launch conditions within the payload bay of the shuttle; the instrument does not operate during either environment. Pre-and post-test performance measurements will confirm the capability to withstand the environments. The objectives of the test are to:

A. Conduct vibration and mechanical shock tests in all 3 axes to verify instrument structural integrity.

B. Make dynamic response measurements at locations within the instrument to verify that components mounted at these locations have been qualified to the appropriate levels.

6.5.2 Test Equipment Facilities

The vibration and shock tests will be conducted on the electrodynamic shaker installation in Building 1250, LaRC. The fixtures required for the test consist of interface plates to accommodate the bolt circle at the bottom of the instrument adapter and the attachments to the slip table for the shaker. The two horizontal axes (parallel to the mainframe and parallel to the axis of the elevation gimbal) require bolting the instrument and interface adapter directly to the slip table. For excitation parallel to the azimuth axis, the instrument bolts to an auxiliary fixture on the slip table and is shaken on with the azimuth axis horizontal (See figure 6.5.2-1)

Instrumentation will consist of triaxial accelerometers located at critical points within the system. A triaxial accelerometer at the adapter-base interface will be used to control the environment.

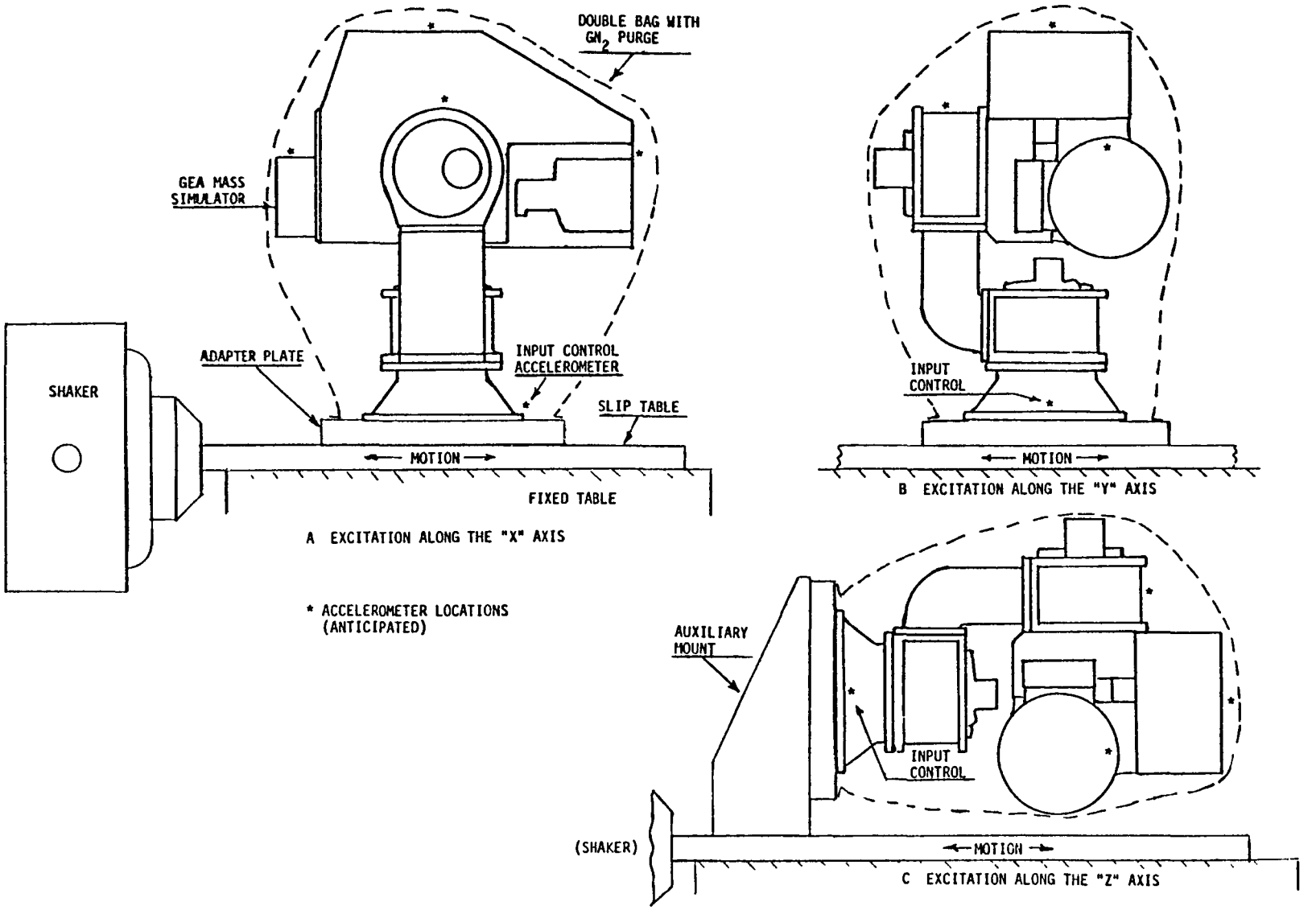

Figure 6.5.2-1, Instrument Mounting Configurations for Three-Axis Random Vibration and Mechanical Shock

Pretest preparation and post test evaluations will employ the small clean room facility within Building 1250 (adjacent to the Vacuum Chamber). The IETS will be emplaced to support electrical operation, the portable radiation sources will be used.

6.5.3 Test Operations

A. Performance Verification to Level III conducted as outlined by Table 6.2.3-1 Note 2.

B. Instrument Preparation

1. Replace the GEA with a mass simulator (GEA will not have flight configuration component placement or conformal coating.)
2. Install the triaxial accelerometers, (presently envisioned at the base, elevation gimbals, GEA, telescope, and preamplifier radiators).
3. Install the flight pyrotechnic pin pullers at the telescope door and at the locations for caging the gimbals. (Observe all safety rules for pyro handing and lead dress.)
4. Mount and bag for test using double bags with provision for GN_2 purge.
5. Transport to the vibration test facility.

B. Test Exposures

1. The mounting plate is installed on the shaker and the accelerometer leads connected.
2. The environments are applied one axis at a time. The vibration and shock conditions are as defined by test requirements (HALOE 13-054 See Sections 3.8.3, 3.8.4). The shock pulses (2 each axis) will be applied after completing the random vibration.

3. A real time data reduction of the control axis accelerometer is performed to confirm the power spectral density input profile and the shock input profile.

C. Post Test

1. The instrument will be returned to the clean room, the bags removed and the GEA reinstalled.
2. A performance evaluation test to Level II will be performed and include the firing of all pyro devices.
   (See Table 6.2.3-1, Note 1)
3. The remaining accelerometer responses will receive a power spectral density analysis for each exposure.

6.5.4 Controls and Documentation

In addition to the system operating procedures for Performance Verification the Random Vibration and shock test will follow a special test procedure which includes the following items.

1. Specific definition of the accelerometer installations..
2. Detail definition of handling procedures (prevention of contamination and protection of pyrotechnic pin pullers).
3. Definition of the vibration and shock to be applied on each axis and safe limits for response of any accelerometer.
4. Diagram of the test installation for all three axes.

6.5.5 Summary of Data Retained for Record

In addition to the performance data records the vibration and shock test results will be recorded on magnetic tape for each axis of testing and include power spectral density analysis plots which show:

1. The vibration and shock inputs to the base of the instrument conforms to defined spectrum shapes.
2. The response parallel to the excitation throughout the instrument falls within the limits established for the location.
3. The off-axis responses are within the limits established for their particular location.

6.6 Mass Properties Measurements

6.6.1 Measurements Required

A. Weight of the instrument

B. Center of Gravity for the instrument

C. Moments of Inertia about each axis

D. Angular momentum reactions for motions in azimuth and elevation

6.6.2 Facilities and Equipment (Located in Building 1250)

A. Three point scales for weight and center of gravity

B. Pendulum Rig, for moments of inertia

C. Rate table for momentum reaction (Performed in the 1202 Clean Room)

D. Handing and mounting fixtures

E. Protective bags

6.6.3 General Concept for Measurements

A. Weight and Center of Gravity

Accomplish by weighing, use a 3 point suspension with the weight recorded at each scale. Determine the center of gravity location by balancing of moments. Measure for all three axes.

B. Moments of Inertia:

Performed on a pendulum rig that imposes rotation about an axis parallel to the axis for measurement. Calculate inertias from measured change in frequency and distances from axis of rotation for the pendulum. Perform for all three axes.

C. Angular Momentum Reactions (To be performed later in the 1202 Clean Room)

Performed with instrument mounted on the rate table. Determine momentum from change in position (or rotation rate) of the rate table after initiating (or terminating) a motion.

6.6.4 Documentation and Controls

These measurements will be performed in accordance with procedures.

A. Weight Center of Gravity

B. Moments of Inertia

C. Angular Momentum Measurement (Includes rate table operation and instrument operation performed later in 1202 Clean Room)

6.6.5 Data Retained For Record

The following measurements will be provided to the precision levels defined (See HALOE 13-054, Section 3.7.2).

A. Weights, for the instrument assembly and PEA

B. Center gravities for the instrument assembly and PEA

C. Moments of Inertia, for the instrument assembly and PEA

D. Momentums during slew, track, solar scan. (Performed later 1202 Clean Room)

6.7 Thermal/Vacuum Testing

6.7.1 Objectives

A. Demonstrate the operating capabilities of the instrument over the range of thermal vacuum conditions representative of the UARS orbit. Measurements will include:

1. Measurements of thermal components (heaters, blackbody, and TEC's).
2. Power and current regulation.
3. All instrument housekeeping, telemetry channels.
4. Firing of pin pullers.
5. Radiometric performance measurements.
6. Pointer/tracker performance measurements to the limits achievable without a rate table.

B. Provide measurements for verifications of the analytical instrument thermal model.

6.7.2 Test Facility and Equipment

The thermal/vacuum testing will be conducted in the chamber located in Building 1250. Figure 6.7-1 shows the general test setup configuration. The pertinent details of the test are summarized as:

A. Chamber Facility Features. The cylindrical chamber dimensions are 8 feet diameter by 15 feet long, lined with LN_2 shrouds. The moveable door has a 27 inch diameter optical-quality quartz window 1 inch thick.

B. Instrument Support. The test will require an adapter-spacer which suspends the instrument from the overhead rail in a manner which replicates the UARS installation. The spacer will align the optical axis of the sunsensor telescope with the horizontal center line of the chamber.

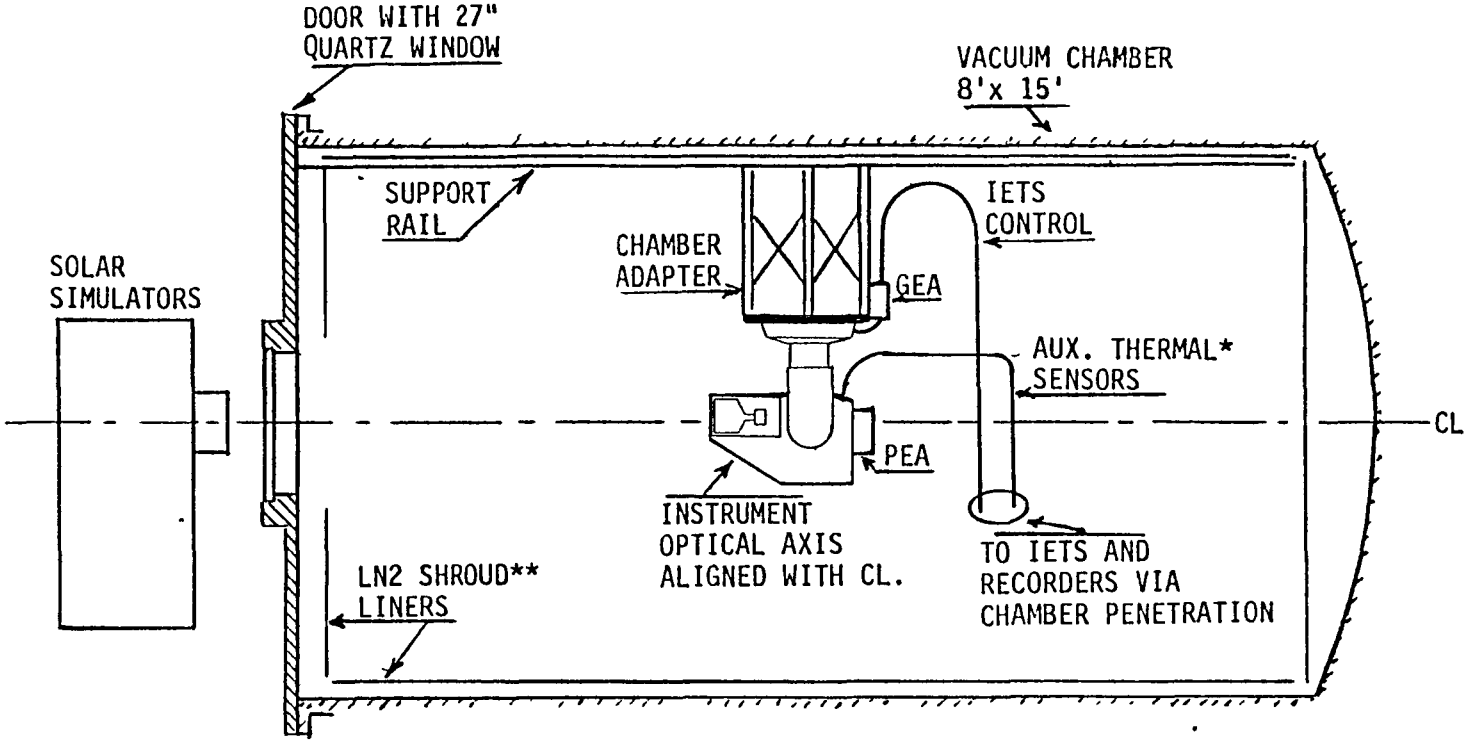

* Instrument Carries Auxiliary Thermistors

** Chamber Instrumented for Shroud Temperatures and Vacuum Control

Figure 6.7-1, Concept for Instrument Thermal-Vacuum Exposure Test

C. Special Test Support and Instrumentation.

1. Test thermistors on the instrument (20) with auxiliary monitor.
2. Test thermistors (or thermocouples) in the chamber (20) with facility monitor.
3. Solar simulators for heat, (external) solar disc for the sunsensor, IR source for the telescope (internal).

6.7.3 Test Operations

The IETS will be installed at the thermal/vacuum test facility for support of this test. The sequence includes the following principal elements:

A. Establish the electrical test configuration in the chamber (Level III). This activity will exercise the thermistor instrumentation system and verify the ability of the IETS to both command and receive data from the instrument with the special-purpose chamber interconnections in place. At the completion of this operation, flight pyrotechnic pin pullers will be installed in accordance with safety regulations.

B. Application of environments. Thermal cycling will simulate the hot, intermediate, and cold cases for orbital thermal equilibrium, for a qualification (protoflight) exposure. The details for temperatures, times, cycle rates and operating points are defined in Table 3.5.7-1.

C. Functional Testing: All the instrument operating modes will be functionally tested.

D. Pointer/Tracker Performance Measurement. Tests within the chamber will not have benefit of a rate table for imposing counter motions. However, the pointer/tracker measurements will include:

1. Gimbal uncage pyro firing.
2. Slews to Position. The instrument will be commanded to positions which will include the full range of gimbal motions. Telemetry for slew rates and positions will be recorded.
3. Solar Acquisition. A series of commanded slews will terminate in solar acquisition. Acquisition field-of-view, acquisition time, and pointing accuracy will be measured.
4. Solar Scans. A series of solar scans will be commanded. Scan amplitude and scan rates will be measured.

E. Radiometric Performance Measurements

The radiometric measurements will begin with a pyro firing event to open the telescope door. The performance measurements to be obtained are summarized in Table 6.7.4-1 with references to previous testing for comparisons of data.

F. Recovery: At the completion of the thermal vacuum cycling the chamber is returned to ambient conditions and opened for visual inspection.

A performance verification to Level III precedes the removal from the chamber together with bagging and return of the instrument and the IETS to the HALOE Clean Room in Building 1202.

6.7.4 Documentation and Controls

Procedures required for thermal/vacuum testing include:

A. Test Configuration Control. A procedure will define the flow of events, the test configuration at each phase, and the set-up and recovery operations.

B. Thermal Environment. A procedure will define operation of the thermal/vacuum chamber, including temperature profile, equilibrium conditions, etc.

TABLE 6.7.4-1, RADIOMETRIC MEASUREMENTS DURING THERMAL VACUUM TESTING

MEASUREMENT	METHOD	COMPARISON
1. Balance mode measurements include time constant for the AGC Loop by command mode operation.	Execute balance sequence, measure time to time to reach equilibrium	Same as for laboratory operation.
2. Perform a calibration sequence which measures the movements, timing and response for all channels to all the elements of the wheel. Review for Cross-talk effects.	Execute the calibration commands while monitoring output.	Same as for laboratory operations.
3. Data mode steady state performance: Verify: ΔR when $\Delta V=0$ ΔV bias offset, drift noise and NEM.	Enter data mode and record $V, \Delta V$, $R, \Delta R$ and and radiometer outputs for 3, 15, and 45 minutes.	Test is same as for laboratory.
4. Data mode operation: Measure self emission and verify temporal response of detectors.	Override the pointing parameters to slew the telescope to a position which points at cold shrouds. Measure self emission. Return to the solar source, measure temporal response.	Modified operating procedure required to integrate slews and radiometric test.

C. Instrument Operation. A modified Systems Test Procedure will define the instrument tests.

6.7.5 Summary of Data and Records

Test results will include:

1. Chamber temperature and pressure with time.
2. Test thermistor temperatures with time.
3. Instrument housekeeping telemetry as a function of time (temperature).
4. Instrument performance telemetry as a function of time and temperature. These data will include both the radiometric and the pointer/tracker measurements.

6.8 Performance Verification Level I

The instrument will receive a performance verification tests which repeats the sequences and data obtained at the start of the environmental test series (See 6.2). The data will be compared for evidence of change or trends. The comparison will be supplemented by data from the Level II and Level III operations performed in association with each move or environment.

6.9 In-Band Spectral Evaluation

The option will be retained to repeat any previous measurement obtained during integration testing. The decision to repeat will be based upon the technical review of the test data. Environmental exposures and handling have a recognized potential for causing changes in the transmission characteristics of the narrow band filters. A partial repeat of the In-Band Spectral Test (See 5.8) will be performed with the specific measurements filters and illumination defined during the review of test data.

7.0 REFURBISHMENT TESTING

The planned refurbishment of the instrument involves the change out of optical elements and detectors plus a vacuum bake out to remove potential contaminants which could degrade optical performance. The reassembly, reverification and characterization of the instrument will require a series of tests which match the initial sequence for integration and environmental verifications. The testing envisioned for refurbishment will be procedural repeats of previous sequences. Modifications will represent experience gained from the initial testing (e.g. incorporate the "redlines") or adjustments to levels, durations, etc. During the refurbishment sequence the instrument will not experience an environment it has not seen previously. In operation the only new element incorporated will be the on-board Automatic AGC which will require the additional step of counting the iterations to achieve a radiometric balance. The testing planned for refurbishment support appears in Table 7-1 as a sequence of tests and the test activity which will be repeated.

Upon completion of the testing and delivery of the instrument for integration, test support will consist of limited-scope operations with control by means of the IETS or through the UARS itself. Present testing envisioned as support will consist of performance verifications to Levels II or III with the option tailored to the particular test opportunity.

Table 7.1 TEST SUPPORT FOR REFURBISHMENT

Action or Activity	Reference to Previous Testing
1. Align Detectors	Detector Alignment, 5.2, 5.3
2. Cross-Talk	Optical Cross-Talk, 5.4
Complete Electrical Assembly	
3. Performance Verification to Level III	Performance Verification 6.2, (Pointer-Tracker Portion Omitted)
Assemble to Optics Head	
4. Pointer-Tracker Characterization	Pointer-Tracker Characterization 5.10
5. Cookout	Thermal Vacuum, 6.7 (Temperature Cycle Modified)
6. Dynamic Range	Initial Radiometrics 5.6
7. Potentiometer Trim	Initial Radiometrics 5.6
8. Cal Data Mode Operations	Initial Radiometrics 5.6
9. Cross-Talk	Initial Radiometrics 5.6
10. Empty Cell Bias	Radiometric Characterization 5.7
11. Polarization	Radiometric Characterization 5.7
12. Balance Linearity	Radiometric Characterization 5.7
13. IFOV	Radiometric Characterization 5.7
14. Out of Field Rejection	Radiometric Characterization 5.7
15. In-Band Spectral Response	In-Band Spectral 5.8
16. Gas Response	Gas Response 5.9
Install Covers	
17. Electromagnetic Compatibility	Electromagnetic Compatibility 6.3 (Reduced Scope)
18. Random Vibration and Shock	Random Vibration and Shock 6.5 (FAT Levels)
19. Thermal Vacuum	Thermal Vacuum 6.7 (FAT Conditions)

20. Mass Properties	Mass Properties 6.6
21. Performance Verification Level I	Performance Verification 6.2
22. Spectral Response	In-Band Spectral 5.8

1 Report No	2 Government Accession No	3 Recipient's Catalog No
NASA TM-87709		

4 Title and Subtitle	5 Report Date
Halogen Occultation Experiment Integrated Test Plan	May 1986
	6 Performing Organization Code 678-12-04-09
7 Author(s) L. E. Mauldin, III and A. J. Butterfield	8 Performing Organization Report No
	10 Work Unit No.
9 Performing Organization Name and Address NASA Langley Research Center Hampton, VA 23665-5225	11 Contract or Grant No
	13 Type of Report and Period Covered Technical Memorandum
12 Sponsoring Agency Name and Address National Aeronautics and Space Administration Washington, DC 20546-0001	14 Sponsoring Agency Code

15 Supplementary Notes

L. E. Mauldin III, NASA Langley Research Center, Hampton, Virginia.
A. J. Butterfield, Bionetics Corporation, Hampton, Virginia.

16 Abstract

The test program plan is presented for the Halogen Occultation Experiment (HALOE) instrument, which is being developed in-house at the Langley Research Center for the Upper Atmosphere Research Satellite (UARS). This comprehensive test program was developed to demonstrate that the HALOE instrument meets its performance requirements and maintains integrity through the UARS flight environments. Each component, subsystem, and system level test is described in sufficient detail to allow development of the necessary test setups and test procedures. Additionally, the management system for implementing this test program is given. The HALOE instrument is a gas correlation radiometer that measures vertical distribution of eight upper atmospheric constituents: O_3, HCl, HF, NO, CH_4, H_2O, NO_2, and CO_2.

17 Key Words (Suggested by Author(s))	18 Distribution Statement
Radiometer Remote Sensor Spaceflight Instrument Environmental Sensor Space Optics Upper Atmospheric Research Satellite	Unclassified - Unlimited Subject Category 19

19 Security Classif (of this report)	20 Security Classif (of this page)	21 No of Pages	22 Price
UNCLASSIFIED	UNCLASSIFIED	224	A10

N-305

For sale by the National Technical Information Service, Springfield Virginia 22161

End of Document