Federal Systems Division
TRW Space & Technology Group

TRW

1262

(NASA-CR-174904) SATELLITE VOICE BROADCASE SYSTEM STUDY. VOLUME 1: EXECUTIVE SUMMARY Contractor Report, 11 Apr. 1984 - 11 Jul. 1985 (TRW, Inc., Redondo Beach, Calif.) 46 p HC A03/MF A01 CSCL 17B G3/32
N86-24878
Unclas
43076

Satellite Voice Broadcast System Study

Volume 1 — Executive Summary

July 1985

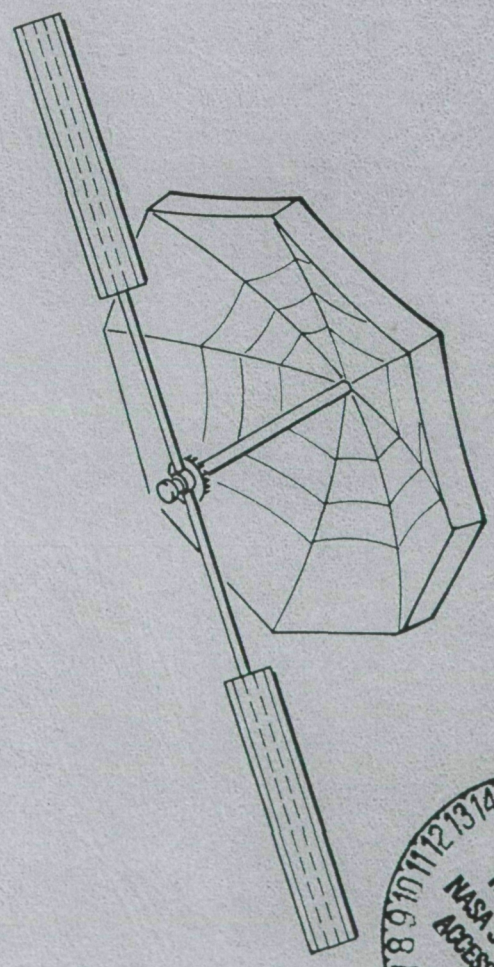

MAY 1986
RECEIVED
NASA STI FACILITY
ACCESS DEPT.

Prepared for
NASA Lewis Research Center

1. Report No.	2. Government Accession No	3 Recipient's Catalog No
CR 174904		

4 Title and Subtitle	5. Report Date
SATELLITE VOICE BROADCAST SYSTEM STUDY VOLUME 1 - EXECUTIVE SUMMARY	July 1985
	6. Performing Organization Code
7 Author(s) Dr. Michael Horstein	8. Performing Organization Report No
	10 Work Unit No.
9 Performing Organization Name and Address TRW Inc. One Space Park Redondo Beach, CA 90278	11. Contract or Grant No NAS3-24232
12. Sponsoring Agency Name and Address National Aeronautics and Space Administration Washington D.C., 20546	13. Type of Report and Period Covered Contractor Report 4-11-84 through 7-11-85
	14. Sponsoring Agency Code

15. Supplementary Notes

Contract Monitor - Charles E. Provencher, Jr.
NASA Lewis Research Center
Cleveland, Ohio

16. Abstract

This study investigates the feasibility of providing Voice of America (VOA) broadcasts by satellite relay, rather than via terrestrial relay stations. Satellite voice broadcast systems are described for three different frequency bands: HF (26 MHz), VHF (68 MHz), and L-band (1.5 GHz). The geographical areas of interest at HF and L-band include all major land masses worldwide with the exception of the ~~U.S.~~, Canada, and Australia. Geostationary satellite configurations are considered for both frequency bands. In addition, a system of subsynchronous, circular satellites with an orbit period of 8 hours is developed for the HF band. VHF broadcasts, ~~which are confined to the Soviet Union,~~ are provided by a system of Molniya satellites.

Satellites intended for HF or VHF broadcasting are extremely large and heavy. Satellite designs presented here are limited in size and weight to the capability of the STS/Centaur launch vehicle combination. Even so, at HF it would take 47 geostationary satellites or 20 satellites in 8-hour orbits to fully satisfy the voice-channel requirements of the broadcast schedule provided by VOA. On the other hand, three Molniya satellites suffice for the geographically restricted schedule at VHF.

At L-band, only four geostationary satellites are needed to meet the requirements of the complete broadcast schedule. Moreover, these satellites are comparable in size and weight to current satellites designed for direct broadcast of video program material.

17 Key Words (Suggested by Author(s))	18 Distribution Statement
Voice of America Satellite voice broadcasting Large space structures Phased-array antennas High-power transmitters	Unclassified - unlimited

19. Security Classif (of this report)	20 Security Classif. (of this page)	21. No. of pages	22. Price*
Unclassified	Unclassified	42	

*For sale by the National Technical Information Service, Springfield, Virginia 22161

Federal Systems Division
TRW Space &
Technology Group

TRW

Satellite Voice Broadcast System Study

Volume 1 — Executive Summary

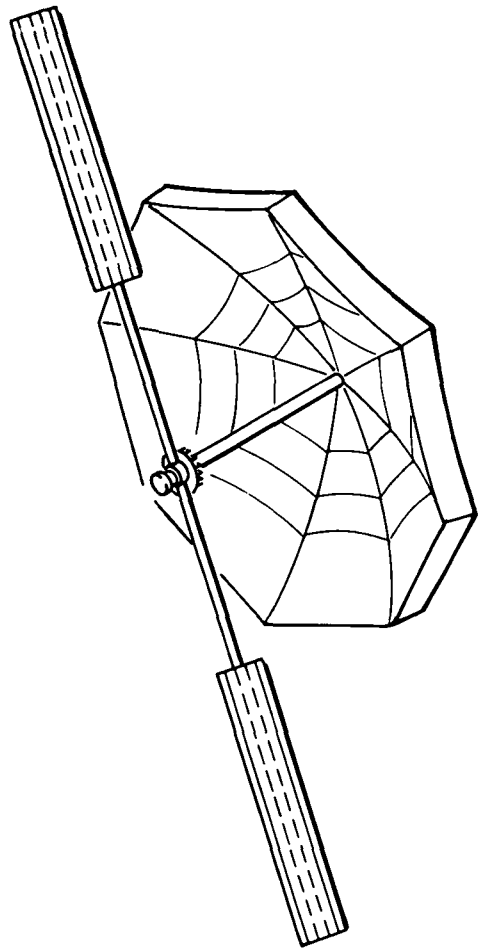

July 1985

Prepared for
NASA Lewis Research Center

Federal Systems Division
TRW Space &
Technology Group

TRW

Satellite Voice Broadcast System Study

Volume 1 — Executive Summary

July 1985

Contract No. NAS3-24232

TRW Space Technology Group
One Space Park
Redondo Beach, CA 90278

Prepared for:
NASA
Lewis Research Center
21000 Brookpark Road
Cleveland, Ohio 44135

Approved:

M. Horstein
Project Manager

R. E. Sharples
Manager, Systems Engineering

1. INTRODUCTION

The Voice of America (VOA), a division of the U.S. Information Agency (USIA), provides voice broadcasts to most areas of the world. These include, on a daily basis, more than 30 hours of English broadcasts and more than 100 hours of foreign language broadcasts. The dominant broadcast type is news, followed by features, news related material, music, and editorials. News sources include the wire services, domestic and foreign news bureaus, foreign broadcasts, and periodicals.

VOA's technical headquarters are in Washington, DC. VOA programming, which originates in Washington, is transmitted to listeners via relay stations located in the U.S. and in a number of foreign countries, as well as through leased facilities. Most transmissions to U.S. and foreign relay stations are at high frequency (HF), although in some cases satellite links are now used.

Many of the relay station transmission facilities are quite old and/or of lower power than desired. Consequently, VOA has embarked on a $1 billion modernization program to replace antennas at high priority sites, upgrade transmitters at existing relay stations, and begin construction of several new projects.

In conjunction with the modernization effort, VOA is considering the potential application of new technologies. To this end, the USIA has funded NASA to contract with two satellite manufacturers to investigate the role that satellite direct broadcasting might play in VOA's future operations. This volume summarizes findings of a 1-year study conducted by TRW in answer to this question.

To be of value, broadcasting must take place at frequencies within the bandwidth of receivers in the hands of the populace. The most widely received shortwave bands are between 6 and 11 megahertz. A considerably smaller percentage of radios can receive frequencies between 20 and 26 megahertz. However, to be reasonably assured that satellite transmissions will penetrate the ionosphere, they should be above 20 megahertz. An additional reason for desiring a higher broadcast frequency is to reduce

the size of the satellite antenna, as the antenna diameter needed to produce a given beamwidth varies inversely with frequency.

The array of frequency bands considered in this study is indicated in Figure 1. Band 1 comprises four RF subbands for which direct broadcasting allocations exist. Because of the questionable nature of ionospheric penetration at the lower subbands, Band 1 system designs are described for the top subband.

Band 2, which lies in the VHF band, was considered in this study only for broadcasts to the Soviet Union, in which there exists a significant population of suitably tunable receivers. Because of the inverse relationship between antenna size and frequency, Band 2 systems are assumed to operate at 68 megahertz.

Band 3 receivers are virtually nonexistent today. However, because of the long-range objectives of this study and the attractiveness of the higher frequency bands for direct broadcasting, the characteristics of Band 3 broadcast systems were investigated as well.

The three frequency bands under the Band 4 heading are currently allocated to direct broadcasting in Regions 1, 2, and 3 as defined by the International Telecommunications Union. Following the initial phase of this study, TRW was directed by NASA to pursue system concepts only for Bands 1, 2, and 3.

Band 1 transmissions employ double-sideband amplitude modulation (DSB-AM), with a maximum baseband frequency of 5 kilohertz. Broadcasts in Bands 2 and 3 use frequency modulation (FM), with a maximum baseband frequency of 15 kilohertz and a maximum deviation of 75 kilohertz. The RF bandwidths of the DSB-AM and FM transmissions are 10 and 250 kilohertz, respectively.

The present study is confined to developing satellite voice broadcast system concepts for the different frequency bands. A subsequent contract will be awarded by VOA to develop projections of receiver populations worldwide. The results of the latter study will be evaluated by VOA in conjunction with the system concepts developed under the present pair of contracts to assess the attractiveness of those system concepts.

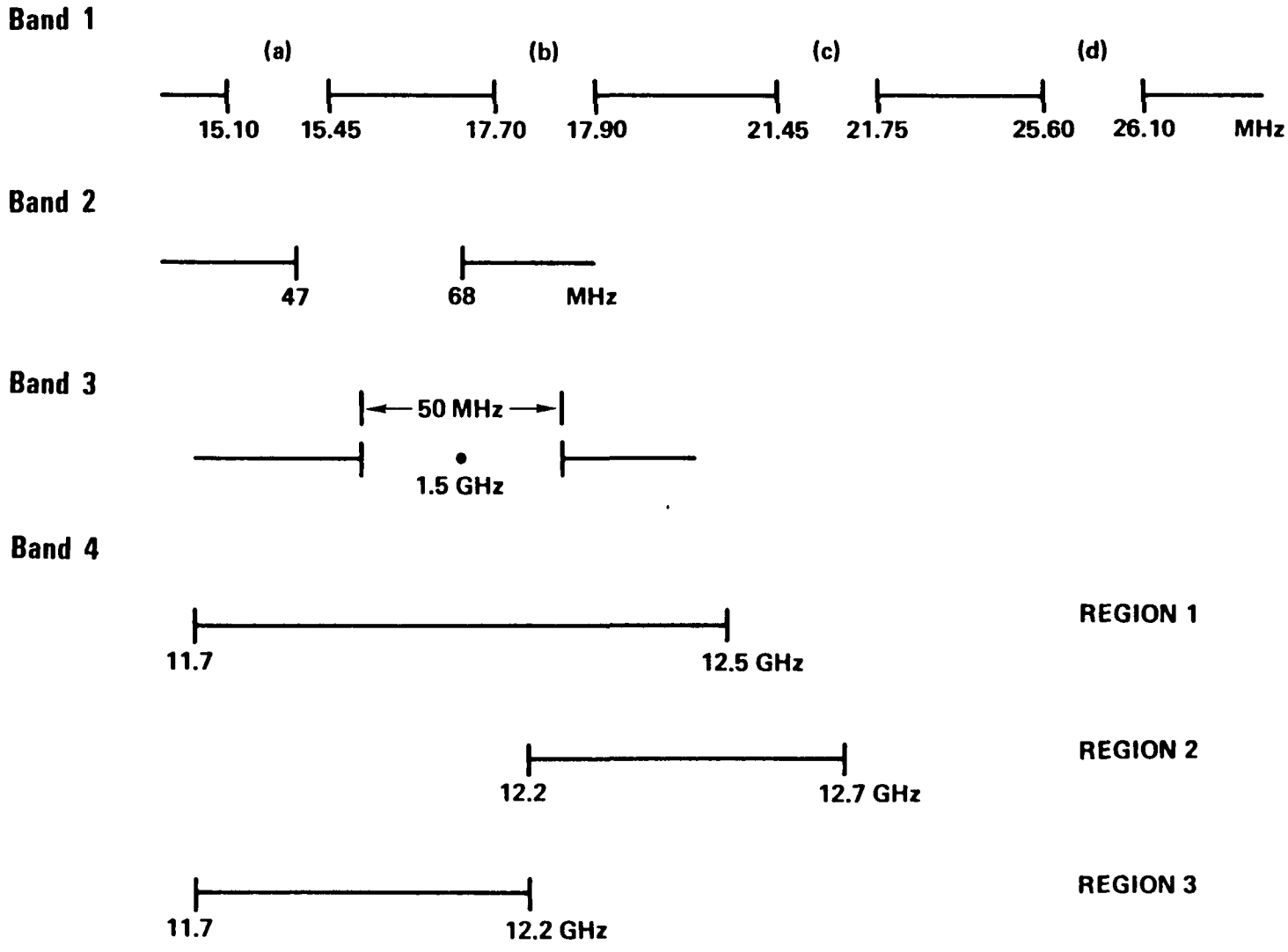

Figure 1. Frequency Band Definition

Once this assessment has been made, it will be possible to evaluate the merits of satellite broadcast systems as a complement to, or substitute for, terrestrial broadcast facilities. This comparison will be facilitated by life-cycle costs developed for each of the satellite systems as part of the present study.

The feasibility of satellite voice broadcasting depends on the required electric field strength. The baseline system requirement is 300 μV/m in Band 1 and 250 μV/m in Band 2. In Band 3, the signal strength requirement is stated differently — namely, to produce a demodulated signal-to-noise ratio of 49 dB with an indoor receiver and an outdoor antenna. The field strength requirements in Bands 1 and 2 were subsequently relaxed in considering a number of system variations.

Following a series of tradeoffs and analyses performed in the initial study phase, four system concepts were selected for further investigation. They are enumerated by frequency band and orbit below. The inclination of the 8-hour orbit is 28.5 degrees (equal to the latitude of Cape Canaveral), to maximize the satellite weight in orbit.

System	Band	Orbit
1	1	Geostationary
2	1	8-hour circular
3	2	Molniya
4	3	Geostationary

Each of the four satellite systems is designed to satisfy the channel requirements of a broadcast schedule provided by VOA. This schedule specifies the number of voice channels to be provided to each of 15 geographical zones at 15-minute intervals throughout the day. The broadcast zones are defined in Figure 2. (System 3 deals only with the four zones that constitute the Soviet Union.) A compressed version of the broadcast schedule, in which the channel requirements are allowed to change only at 1/2-hour intervals, is shown in Figure 3.

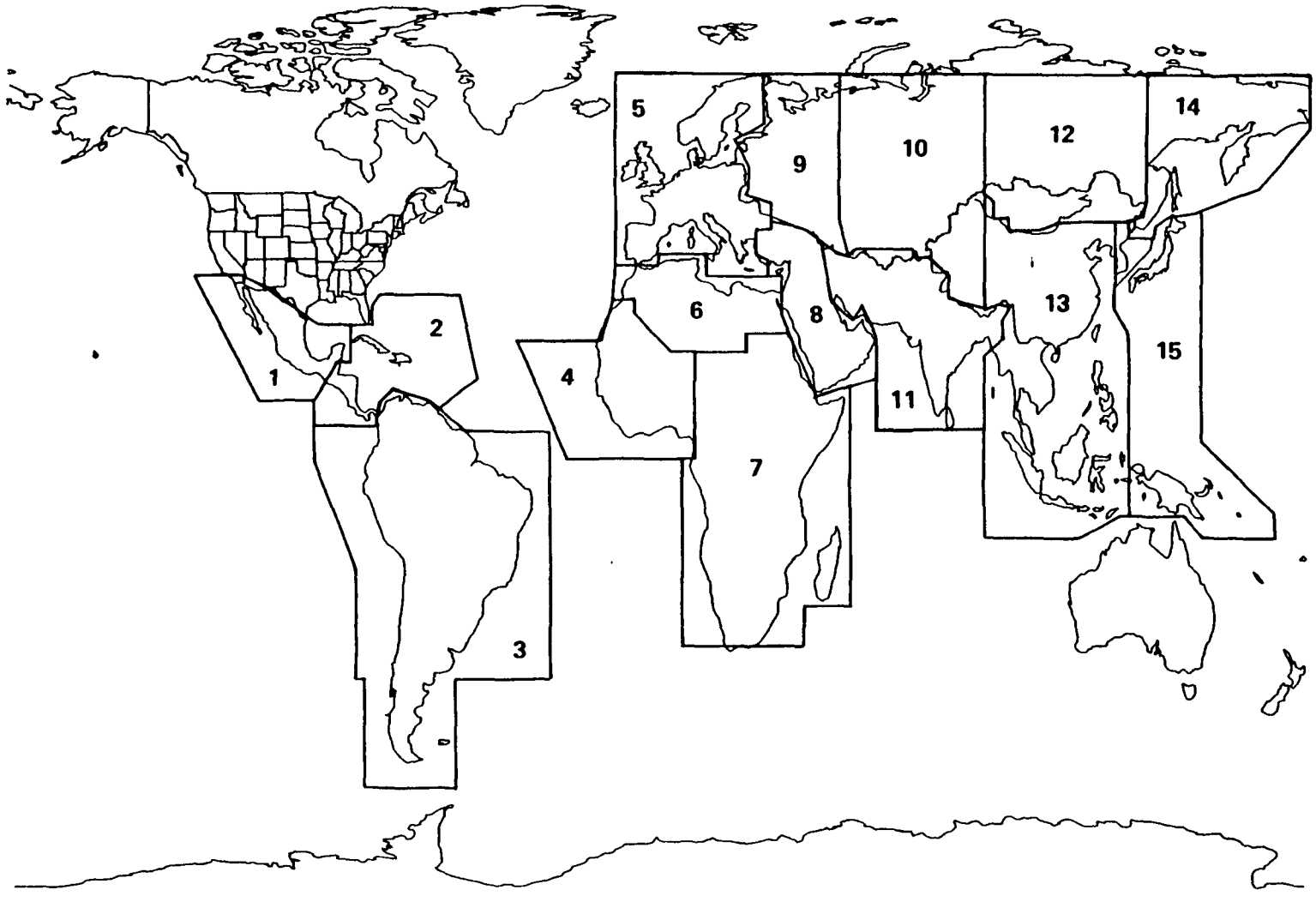

Figure 2. Broadcast Zone Definition

- Entries Indicate Number of Voice Channels Per Zone

ZONE	0	1	2	3	4	5	6	7	8	9	10	11	12	13	14	15	16	17	18	19	20	21	22	23	24	ZONE
1	1	1	2	2	2	2	2	2	2	2	2											1	1	1	2	2	2	1	1	1														1	1	1
2	2	2	2	2	2	2	2	1	1	1	1										1	1	2	2	2	2	2	1																1	2	2	2
3	2	2	2	2	2	2	1	1	1	1	1							1	1	1	1	2	2	2	2	1	1															1	1	1	2	2	3
4											1	2	1		1	1															1		1	2	2	1	1	1	1				4
5							1	2	8	11	9	6	2	1	1	1									1	1	1	1	1			2	6	10	11	9	6	4	2	2	1	1	1	1	1	1	1	5
6							1	1	2	2	2	2	1	1	1	2																		2	2	2	2	2	2	2	2	2	2	1	1	1	1	6
7						1	2	1	3	3	3	3	2	1	1	2														1	2	1		3	2	2	2	3	3	3	3	3	3	2	1	1	1	7
8				1	1	1	1		1	2	2	1				1			1	1	1	1							1	1	1	2	1		1	1	1	1	1	1	1	1	1	1					8
9				1	1			2	6	1																			1	1	1	1	2	5	1	1	1											9
10	1	1			2	2	2	1														1	1	1	1	1	1	1	2	1	1	1	1												1	1	10
11			2	3	2	2	4	4																		2	4	3	2	3	3	3	3	1	1	1	1									1	11
12	1	1																				2	1	1	1	1	1																	1	1	1	12
13	2	2																			2	6	4	3	2	3	3	3	3	2	2											1	1	2	6	5	4	13
14														1	1	1	2	1	1	1	1	1																1	1	2	2	2	2					14
15	1	1																			1		1	1	1	1	1	1	1	1														1	1	1	1	15

UNIVERSAL TIME – HOURS

Figure 3. Broadcast Schedule

2. SATELLITE SYSTEM DESIGN

Because of the large satellite power requirements in Bands 1 and 2, the antenna beamwidth is a critical design parameter. It is found that a 3-degree beamwidth, as viewed from geostationary orbit, represents a good compromise between the joint desires to: 1) avoid radiating power outside zone boundaries, and 2) minimize antenna size. For orbits other than geostationary, the beamwidth is modified to illuminate the same size area as from geostationary orbit. The power requirements in any frequency band are thereby rendered invariant to the choice of orbit.

The satellite RF power requirements depend on the number of channels transmitted to each beam area. It is assumed that the same number of channels are transmitted to each area of a particular zone (but not necessarily by a single satellite). Because it is not necessary that every channel be transmitted throughout an entire zone, the number of channels per beam area will sometimes be less than the corresponding entry in Figure 3. The transmitter power assigned to Zone i can be written as $C_i N_i P_{CB}$, where C_i is the number of channels required in each beam area of Zone i, N_i is the number of beams needed to cover Zone i, and P_{CB} is the transmitter power assigned to each channel in a given beam (i.e., the transmitter power per channel-beam). Thus, the transmission requirements of a zone are characterized by its C x N product (i.e., the number of channel-beams associated with that zone).

The channel-beam demand of the broadcast schedule, as it applies to Systems 1, 2, and 4, is shown in Figure 4. Broadcast service is measured in units of channel-beam-hours (CBH). The total daily service called for by the schedule in Figure 4 is 894 CBH.

The channel-beam demand for System 3 is given in Figure 5. Differences between corresponding entries in Figures 4 and 5 result from different numbers of beams being required for zonal coverage from geostationary orbit and Molniya apogee.

The number of satellites required to meet the demands of the broadcast schedule depends on the channel-beam capacity of an individual satellite. Satellite capacity, in turn, depends on the lift capability to low earth

- Applies to Geostationary and 8-Hour Orbits
- Total of 894 Channel-Beam-Hours Demanded Daily

ZONE	0	1	2	3	4	5	6	7	8	9	10	11	12	13	14	15	16	17	18	19	20	21	22	23	24	ZONE
1	2	2	4	4	4	4	4	4	4	4	4															1
2	4	4	4	4	4	4	4	2	2	2	2															2
3	14	14	14	14	14	14	7	7	7	7	7															3
4											3	6	3		3	3										4
5							2	2	8	12	10	6	2	2	2	2										5
6							3	3	6	6	6	6	3	3	3	6										6
7						7	14	7	14	14	14	14	14	7	7	14										7
8				2	2	2	2		2	4	4	2				2										8
9				1	1			2	6	1																9
10	3	3			6	6	6	3																		10
11			8	12	8	8	16	16																		11
12	2	2																								12
13	14	14																								13
14																										14
15	2	2																								15

ZONE	0	1	2	3	4	5	6	7	8	9	10	11	12	13	14	15	16	17	18	19	20	21	22	23	24	ZONE
1												2	2	2	4	4	4	2	2	2						1
2											2	2	4	4	4	4	4	2								2
3										7	7	7	7	14	14	14	14	7	7							3
4									3																	4
5								2	2	2	2						2	6	10	12	10	6	4	2	2	5
6																			6	6	6	6	6	6	6	6
7																7	14	7		14	14	14	14	14	14	7
8										2	2	2	2							2	2	2	2	2	2	8
9																				1	1	1	1	2	5	9
10												3	3	3	3	3	3	3	6	3	3	3	3			10
11															8	16	12	8	12	12	12	12	4	4	4	11
12												4	2	2	2	2	2									12
13												14	21	21	21	21	21	21	21	21	14	14				13
14								2	2	2	4	2	2	2	2	2										14
15											2		2	2	2	2	2	2	2	2						15

UNIVERSAL TIME – HOURS

Figure 4. Channel-Beam Demand of Modified Broadcast Schedule

- Satellite Beamwidth = 2.7°

NUMBER OF CHANNEL-BEAMS

ZONE	0	1	2	3	4	5	6	7	8	9	10	11	12
9			2	2			4	6	2				
10	4	4		8	8	8	4						
12	3	3											
14													
TOTAL	7	7	2	10	8	8	8	6	2				

UNIVERSAL TIME – HOURS

ZONE	0	1	2	3	4	5	6	7	8	9	10	11	12
9													
10											4	4	
12											6	3	
14								2	2	2	4	2	2
TOTAL								2	2	2	4	2	2

ZONE	0	1	2	3	4	5	6	7	8	9	10	11	12
9													
10													
12													
14	2	2	2	2	2								
TOTAL	2	2	2	2	2								

NUMBER OF CHANNEL-BEAMS

ZONE	12	13	14	15	16	17	18	19	20	21	22	23	24
9				2	2	2	2	4	6	2	2	2	
10	4	4	4	4	8	4	4	4	4				
12	3	3	3	3									
14													
TOTAL	7	7	7	7	6	10	6	6	8	10	2	2	2

ZONE	12	13	14	15	16	17	18	19	20	21	22	23	24
9													
10												4	4
12												3	3
14								2	2	4	4	4	4
TOTAL								2	2	4	4	4	4

ZONE	12	13	14	15	16	17	18	19	20	21	22	23	24
9													
10												4	4
12												3	3
14													
TOTAL												3	7	7

UNIVERSAL TIME – HOURS

Figure 5. Band 2 Channel-Beam Demand for Molniya Orbit Coverage

orbit (LEO) of the Space Transportation System (STS). The latter is taken to be 65,000 pounds; this capability should be available by the end of the decade.

The resulting satellite capacity values are shown in Figure 6. Differences in satellite capacity between Systems 1 and 2 result from the disparity in STS/Centaur payload capability. On the other hand, the payload difference between 8-hour and Molniya orbits is minor. The difference in satellite capacity between Systems 2 and 3 results, instead, from the difference in RF power requirements.

2.1 Baseline System Designs

For the geostationary satellite systems, three satellite locations are needed to provide broadcasting to all 15 zones: 65° west, 30° east, and 115° east longitude Each zone is assigned to one of the three locations. The associated channel-beam requirements at each location are then summed for each 1/2-hour of the day. The maximum sum for any 1/2-hour period at each location determines the satellite requirements at that location.

In the case of the Band 1 geostationary system, the number of satellites needed at each location is found by dividing the maximum channel-beam demand by two, which is the satellite capacity. The resulting numbers of satellites are: 11 at 65° west, 22 at 30° east, and 14 at 115° east. The total number of satellites is therefore 47.

By contrast with the Band 1 and 2 requirements, the required RF power per channel-beam in Band 3 is only 70 watts. Moreover, a 16-ft antenna suffices to produce a 3-degree beam from geostationary orbit. As a result, a single satellite could provide all required broadcasting from each of the orbit locations. However, the maximum channel-beam demand is considerably greater at 30° east than at either of the other two locations. It is more efficient, therefore, to design a satellite to handle the maximum requirement at either 65° west or 115° east (which is 27 channel-beams) and to deploy two such satellites at 30° east. Thus, four satellites are required in all. Each satellite weighs about 4000 pounds.

As can be seen from Figures 5 and 6, the satellite capacity in Molniya orbit (12 channel-beams) exceeds the maximum broadcast requirement in any 1/2-hour period (10 channel-beams). Moreover, a single satellite can be

Baseline System	Band	Orbit	STS/Centaur Payload Capability (lb)	Transmitter Power per Channel-Beam (kW)	Channel-Beams per Satellite
1	1	GEO	13,846	10.0	2
2	1	8-Hour	20,764	10.0	6
3	2	Molniya	19,910	5.5	12

Note: System 4 satellites, which operate in Band 3, are sized according to channel-beam demand at each geostationary orbit location

Figure 6. Satellite Capacity

placed in Molniya orbit so as to maintain continuous visibility of the four Soviet zones for nine hours. It follows that three such satellites, each broadcasting for eight hours per day, can fully satisfy the Band 2 broadcast requirements. The eight-hour broadcast interval for each satellite is centered about apogee passage. Because of the slow angular motion of the satellite near apogee, transmission requirements during the broadcast period may be assumed constant and equal to those obtaining at apogee.

System design for subsynchronous orbits is considerably more difficult than for either geostationary or Molniya orbit. The reason is that satellite coverage of the various zones is time varying. Orbit periods of 6, 8, and 12 hours were considered. The 8-hour orbit was selected, primarily because it provides a better balance between satellite coverage and capacity.

Because the broadcast schedule is divided into 1/2-hour intervals, the following rules are observed:

a) Broadcasts must begin on the hour or 1/2-hour

b) The minimum continuous broadcast period is 1 hour

c) Broadcast periods are constrained to be multiples of 1/2 hour

Additionally, it is assumed that satellite/zone assignments are not varied during any 1/2-hour period. .

With these ground rules, it is found that 20 satellites in 8-hour orbit are required to provide at least single-satellite coverage of the 15 zones during broadcast periods. However, this minimum-coverage constellation does not include sufficient satellite capacity to satisfy the channel-beam requirements throughout the day. Of the daily total of 894 CBH specified in Figure 4, only 735 CBH can be provided.

Feeder links for satellite broadcasts should operate in real time, if at all possible. The alternative (which does not apply to stationary satellites) is to record the program material when the satellite is in view of a feeder-link station, for subsequent broadcast when the satellite is in view of the target area. In order of preference, feeder-link station locations include:

1) U.S. (CONUS plus Alaska and Hawaii)

2) U.S. territories

3) Friendly host countries.

If none of these possibilities exists, real-time transmission can still be accomplished by satellite relay.

For the two geostationary satellite systems, each of the three orbit locations is visible from at least one of the desired station locations. Therefore, real-time feeder links can be established in all cases. For the Molniya system, each satellite is visible from CONUS throughout its 8-hour broadcast period. Consequently, real-time feeder links are possible in this case as well.

Two different ground tracks are involved in the 20-satellite, 8-hour system. For one ground track, real-time feeder links can be established for all but 1 hour of the day. For the other ground track, there is a 2 1/2-hour period during which the satellite is not in view of any of the desired station locations. For these intervals, either satellite relay or storage of program material is necessary.

2.2 System Variations

A number of system variations were examined, based on reductions in coverage, number of broadcast channels, or required field strength. Of these, two sets of variations are of particular interest.

The first variation involves transmission of a single voice channel to each of the 15 zones during prime listening hours. The latter are defined to comprise two hours in early morning and two hours in early evening. A broadcast schedule that accomplishes this objective is shown in Figure 7. The entries, which represent the channel-beam requirements in each 1/2-hour period, are equal to the number of beams needed for zonal coverage. The schedule in Figure 7 minimizes the maximum number of channel-beams required of any satellite.

For a geostationary system designed to operate in Band 1, four satellites are needed at each of the previously selected orbit locations to satisfy the broadcast requirements of Figure 7. In all, 12 satellites are

- Entries Indicate Number of Beams Required for Zonal Coverage
- Total of 196 Channel-Beam-Hours Demanded Daily

ZONE	0	1	2	3	4	5	6	7	8	9	10	11	12	13	14	15	16	17	18	19	20	21	22	23	24
1		2	2	2	2								2	2	2	2									
2	2	2	2	2								2	2	2	2										
3										7	7	7	7										7	7	7	7
4								3	3	3	3										3	3	3	3		
5							2	2	2	2										2	2	2	2			
6						3	3	3	3										3	3	3	3				
7					7	7	7	7									7	7	7	7						
8		2	2	2	2										2	2	2	2								
9		1	1	1	1										1	1	1	1								
10		3	3	3	3										3	3	3	3								
11	4	4											4	4	4	4								4	4
12	2	2											2	2	2	2								2	2
13											7	7	7	7								7	7	7	7
14									2	2	2	2								2	2	2	2		
15									2	2	2	2								2	2	2	2		

UNIVERSAL TIME – HOURS

Figure 7. Prime-Time Broadcast Schedule Providing One Channel per Zone

required. For a Band 3 system, a single satellite with a capacity of seven channel-beams is needed at each orbit location.

For an 8-hour-orbit system, the orbit inclination is increased to 37 degrees. This reduces the satellite capacity from six to five channel-beams, but it also reduces the number of satellites needed for complete 24-hour zonal coverage from 20 to 16. Some gaps in northern coverage result from use of a smaller number of satellites. However, a 12-satellite constellation can provide 180 CBH of broadcasting daily, compared with 192 CBH provided by a 16-satellite constellation and 196 CBH called for by the schedule in Figure 7. Therefore, a 12-satellite constellation is the preferred choice.

In the second set of variations, the field strength requirement is reduced to 150 μV/m in both Band 1 and Band 2. This represents a 6 dB power reduction in Band 1 and a 4.4 dB power reduction in Band 2. These power reductions permit a decrease in number of satellites and/or satellite complexity.

For the geostationary Band 1 system, the fourfold reduction in field strength can be translated into a similar increase in satellite capacity, to eight channel-beams. As a result, 11 satellites suffice to (nearly) satisfy the requirements of the broadcast schedule in Figure 4.

The baseline Molniya satellite capacity of 12 channel-beams (at a field strength of 250 μV/m) completely satisfied the demands of the broadcast schedule for the four Soviet zones. Nothing would be accomplished, therefore, if the reduced field strength were used to increase the satellite capacity. Instead, the satellite size and weight are reduced, with an individual satellite still capable of providing the full broadcast service.

If the antenna diameter is halved, for example, the satellite beams are expanded to 5.4 degrees. Each of the four Soviet zones can be covered by a single beam of this size. With a minor adjustment to the broadcast schedule, the maximum broadcast requirement in any 1/2-hour period (expressed in terms of a 5.4-degree beamwidth) is three channel-beams.

On the other hand, the satellite capacity based on the full STS lift capability is nine channel-beams. It is possible, therefore, to downsize the satellite by using less than the full STS lift capability. A satellite

capable of supporting three channel-beams requires only 40,000 pounds of lift capability, as compared with the full STS capability of 65,000 pounds. Three such satellites, spaced by eight hours along a common ground track, fully satisfy the demands of the broadcast schedule.

For a subsynchronous satellite system, the most straightforward way to take advantage of the field-strength reduction is to increase the orbit inclination from the 28-degree value used in the 8-hour baseline system. As mentioned earlier, 16 satellites can provide 24-hour coverage of all 15 zones at an inclination of 37 degrees, while a reduction in the number of satellites to 12 introduces some gaps in zonal coverage. Nevertheless, because of the 24-channel-beam satellite capacity at the reduced field strength, 12 satellites can provide 864 CBH of broadcasting daily (out of 894 demanded).

A second option is to reduce the satellite antenna size through a doubling of the equivalent geostationary beamwidth to 6 degrees. Because a single beam will now radiate power well outside the boundaries of many zones, the effective capacity of the satellite is reduced by this approach. However, 12 satellites can still provide 845 CBH daily (expressed in terms of an equivalent geostationary beamwidth of 3 degrees).

A final system alternative is to increase the orbit altitude to a value corresponding to (for example) a 12-hour period, while maintaining a 3-degree beamwidth. The wider coverage from 12-hour orbit permits a significant reduction in the number of satellites needed for 24-hour coverage of all zones. Because of the increased satellite capacity that accompanies a field strength reduction to 150 μV/m, an 8-satellite constellation can provide as many as 851 CBH daily.

The salient features of the system designs for a 150 μV/m field strength requirement are summarized in Figure 8.

One final system variation concerns the use of single-sideband amplitude modulation (SSB-AM), rather than DSB-AM, in Band 1. An SSB-AM signal format requires 7.8 dB less transmitter power than DSB-AM, based on a 100-percent modulated double-sideband signal. This decrease in transmitter power is equivalent to a field strength requirement of 122 μV/m. The satellite requirements are therefore somewhat less than those for a field

Orbit	Frequency Band	Equivalent Geostationary Beamwidth	Number of Satellites
Geostationary	1	3°	11
8-Hour	1	3°	12
8-Hour	1	6°	12
12-Hour	1	3°	8
Molniya	2	6°	3

Figure 8. System Summary for 150 μV/m Field Strength Requirement

strength of 150 μV/m. It is found that seven geostationary satellites can provide a daily total of 882 CBH. For an 8-hour-orbit system, 12 satellites are again needed for reasonably complete zonal coverage. Each of the satellites can be made lighter than for the 150 μV/m field strength requirement, while providing the same amount of broadcast service.

3. LIFE CYCLE COSTS

To develop life cycle costs (LCC) for the various systems, a nominal 20-year program span was adopted, together with a satellite life of 7 years. Schedules depicting the satellite development period and the cumulative launch profile for the four baseline systems are shown in Figure 9. Two complete sets of satellites (i.e., twice the fleet quantity) are required in each case. In addition, a 10-percent spare-satellite contingent (not shown) has been assumed. If the broadcast service provided is taken proportional to the number of satellites on orbit, each system provides the equivalent of 14 full years of service over the program span.

In addition to the satellite costs, the LCC include launch costs of $100 million for a full STS load and $58 million for a Centaur-class upper stage. Additionally, there are earth stations for satellite control and feeder-link transmission. There are two such stations in System 3, four in Systems 1 and 4, and seven in System 2. The cost per station is taken as $10 million. Finally, there are operations and maintenance costs of $12.5 million/station/year. The LCC for each baseline system is given in Figure 10.

To provide a measure of system effectiveness, the LCC are normalized to the broadcast service provided. The latter is computed by multiplying the number of CBH provided daily by 5110, which is the number of days in 14 years. The entries in the last column of Figure 10 are the normalized LCC for the four baseline systems.

The high normalized cost of the geostationary system is attributable to the small satellite capacity of two channel-beams. By contrast, the capacity of a satellite in 8-hour orbit is six channel-beams. The daily number of CBH per satellite is approximately the same for the Molniya and 8-hour systems. However, the 8-hour system benefits from considerably more

- Based on 7-year satellite life

	Year	1	2	3	4	5	6	7	8	9	10	11	12	13	14	15	16	17	18	19	20
Baseline System 1	DDT&E	X	X	X	X	X															
	Cumulative Launch Qty						8	16	24	32	40	47		55	63	71	79	87	94		
Baseline System 2	DDT&E	X	X	X	X																
	Cumulative Launch Qty					4	8	12	16	20			24	28	32	36	40				
Baseline System 3	DDT&E	X	X	X	X	X															
	Cumulative Launch Qty						1	3						4	6						
Baseline System 4	DDT&E	X	X	X																	
	Cumulative Launch Qty				2	4						6	8								

Note: Each system provides 14 equivalent years of full broadcast service

Figure 9. Baseline System Development and Launch Schedule

System	Band	Orbit	Fleet Qty	LCC Qty	LCC ($Billion)*	Channel-Beam Hours (x 10^6)†	LCC/CBH** ($000)*
1	1	GEO	47	104	31.7	4.57	6.93
2	1	8-Hr	20	44	14.2	3.76	3.78
3	2	Molniya	3	7	2.9	0.54	5.54
4	3	GEO	4	9	1.9	4.57	0.41

*Constant (1984) dollars

†Delivered service over 14 effective years of life

**CBH = channel-beam-hour

Figure 10. Baseline System Life Cycle Costs (LCC)

"learning" and also has the nonrecurring satellite cost spread over a larger number of satellites. Hence, the smaller LCC/CBH for the 8-hour system.

System 4 has by far the smallest LCC/CBH. The satellites in this system are not very different in size from some current commercial satellites. Operations and maintenance costs, which are minor for the other three systems, are estimated to approach 50 percent of the System 4 LCC.

Measures of system cost other than the normalization of LCC with respect to CBH may be of interest. For example, the system cost per year of (full) operation is found by dividing the LCC by 14. In round numbers, the annual costs of Systems 2 and 4, which provide comparable amounts of programming (735 versus 894 CBH daily), are $1 billion and $140 million, respectively.

Life cycle costs for the system variations are presented in Figure 11. The effectiveness of the Band 1 geostationary, prime-time system is comparable to that of the 8-hour system because both require the same number of satellites. The relative loss of effectiveness of the 8-hour system for prime-time broadcasting is attributable to underutilization of satellite capacity, particularly over the mid-latitude zones. The LCC/CBH of the Band 3 geostationary, prime-time system is four times that of the baseline system, because the service provided is five times smaller while the life-cycle number of satellites is only reduced from nine to seven.

The number of satellites in the 8-hour system designed for a field strength of 150 μV/m is determined by coverage requirements, as is the case for the 8-hour prime-time system. The LCC/CBH is much smaller for the former system because of the greater broadcast service provided. The small LCC/CBH for the geostationary system has the same explanation. The LCC/CBH for the 12-hour system is only slightly lower than for the 8-hour system, despite the decrease in number of satellites, because the satellites are larger and more complex. Finally, the Molniya system LCC/CBH is only modestly smaller than for the baseline system, because the number of satellites is unchanged.

The LCC/CBH for SSB-AM in Band 1 are $1300 for the geostationary system and $1880 for a system of 8-hour satellites.

Variation	Band	Orbit	Fleet Quantity	LCC Quantity	LCC ($Billion)*	LCC/CBH** ($000)
Prime-Time System	1	Geo	12	26	9.5	9.54
	1	8-hr	12	26	9.1	9.88
	3	Geo	3	7	1.6	1.61
150 μV/m Field Strength	1	Geo	11	24	8.5	1.86
	1	8-hr	12	26	9.0	2.05
	1	12-hr	8	18	7.3	1.71
	2	Molniya	3	7	2.2	4.03

*Constant (1984) dollars
**LCC/CBH = Life-cycle-cost/channel-beam-hour

Figure 11. Life Cycle Costs for System Variations

4. SATELLITE CONFIGURATIONS AND TECHNOLOGY

The baseline system satellite configurations are largely determined by two technology selections: antenna type and primary power source. The antenna choice is between a parabolic reflector and a phased array. The narrow beamwidths required from geostationary and Molniya orbit necessitate the use of a reflector type of antenna. The particular reflector chosen is the cable-catenary. A 10-ft model of the reflector is shown in Figure 12. At subsynchronous altitudes, the phased array is preferred because of its greater flexibility in generating multiple, steerable beams. The phased array also reduces considerably the power required from any single transmitter.

Three types of primary power source were considered: solar panels, nuclear reactor, and solar dynamic power conversion. Based on a weight analysis, it was concluded that only solar panels lead to an acceptable electrical power subsystem weight for the required power levels. A significant factor in this analysis is the absence of a requirement for eclipse operation.

With the antenna and primary power source specified, it is possible to configure satellites for the various baseline systems. A satellite concept for the Band 2 Molniya system is shown in Figure 13. The Band 1 geostationary satellite concept is similar except for the dimensions. Specifically, the antenna diameter for the geostationary satellite is 267 meters. The solar panels are placed outboard of the antenna to avoid both shadowing of the panels and blockage of the reflected RF signals.

The antenna feed geometry is shown in Figure 14. Each feed element generates a distinct 3-degree beam from geostationary orbit or a 2.7-degree beam from Molniya orbit. The feed element is the crossed dipole, which consists of two orthogonal, unequal-length dipole arms. The relative dipole lengths are adjusted for phase quadrature, to obtain circular polarization, which is needed to combat the effects of Faraday rotation. The bandwidth of the crossed-dipole element is typically 3 percent, which is adequate for the present application. The dipole arms are designed to fold during launch.

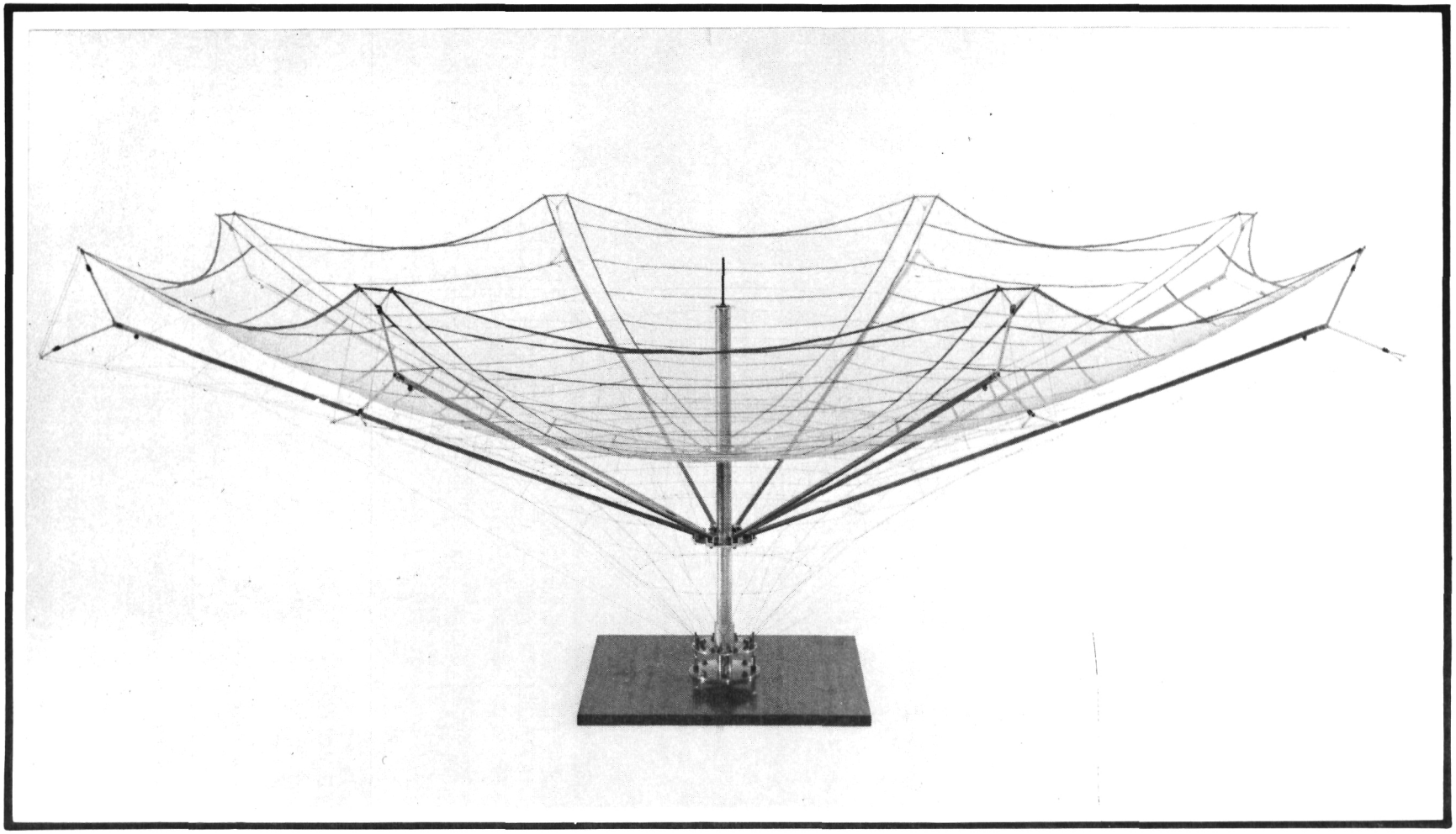

Figure 12. Cable-Catenary Antenna -- 10-ft Scale Model

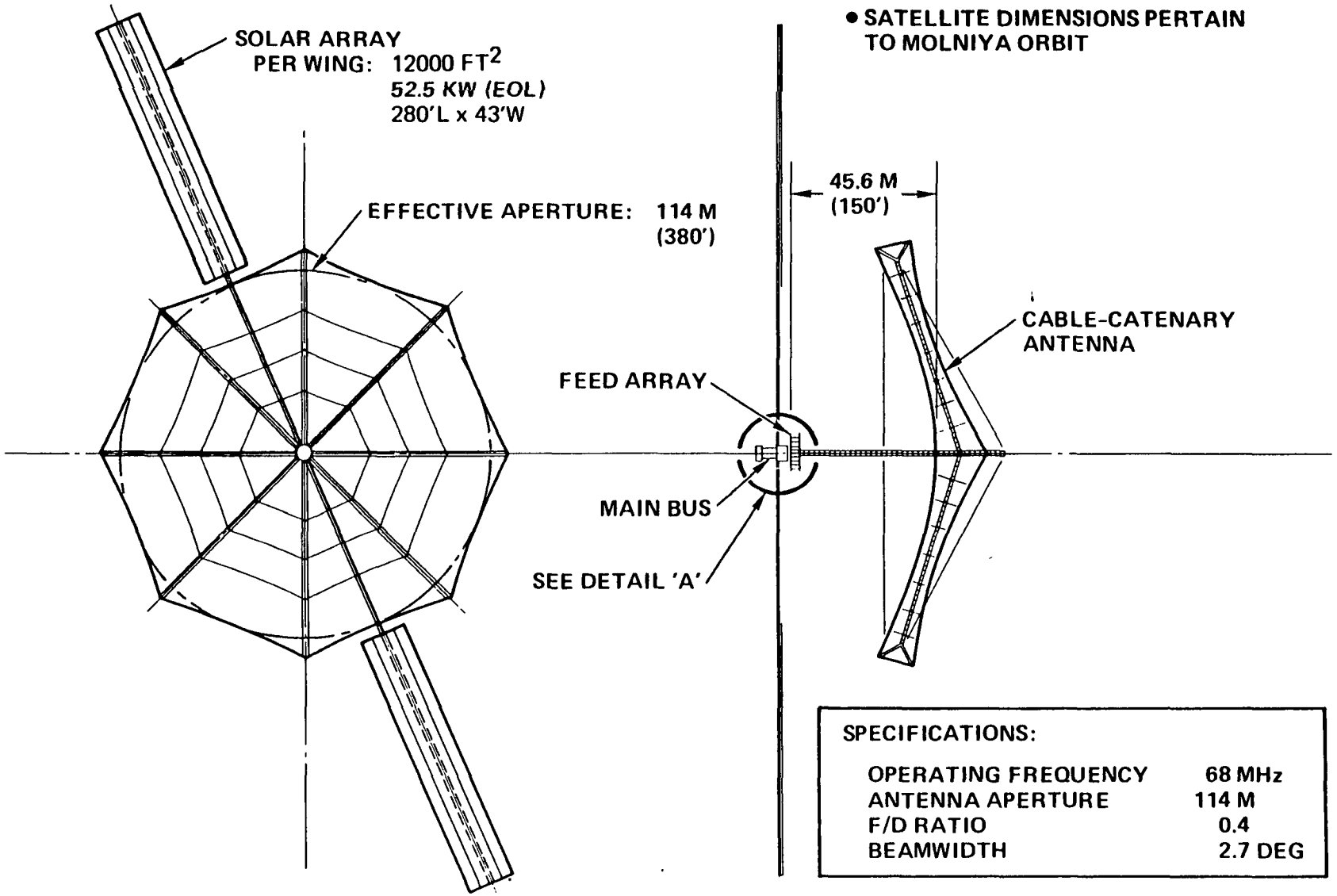

Figure 13. Molniya and Band 1 Geostationary Satellite Concept

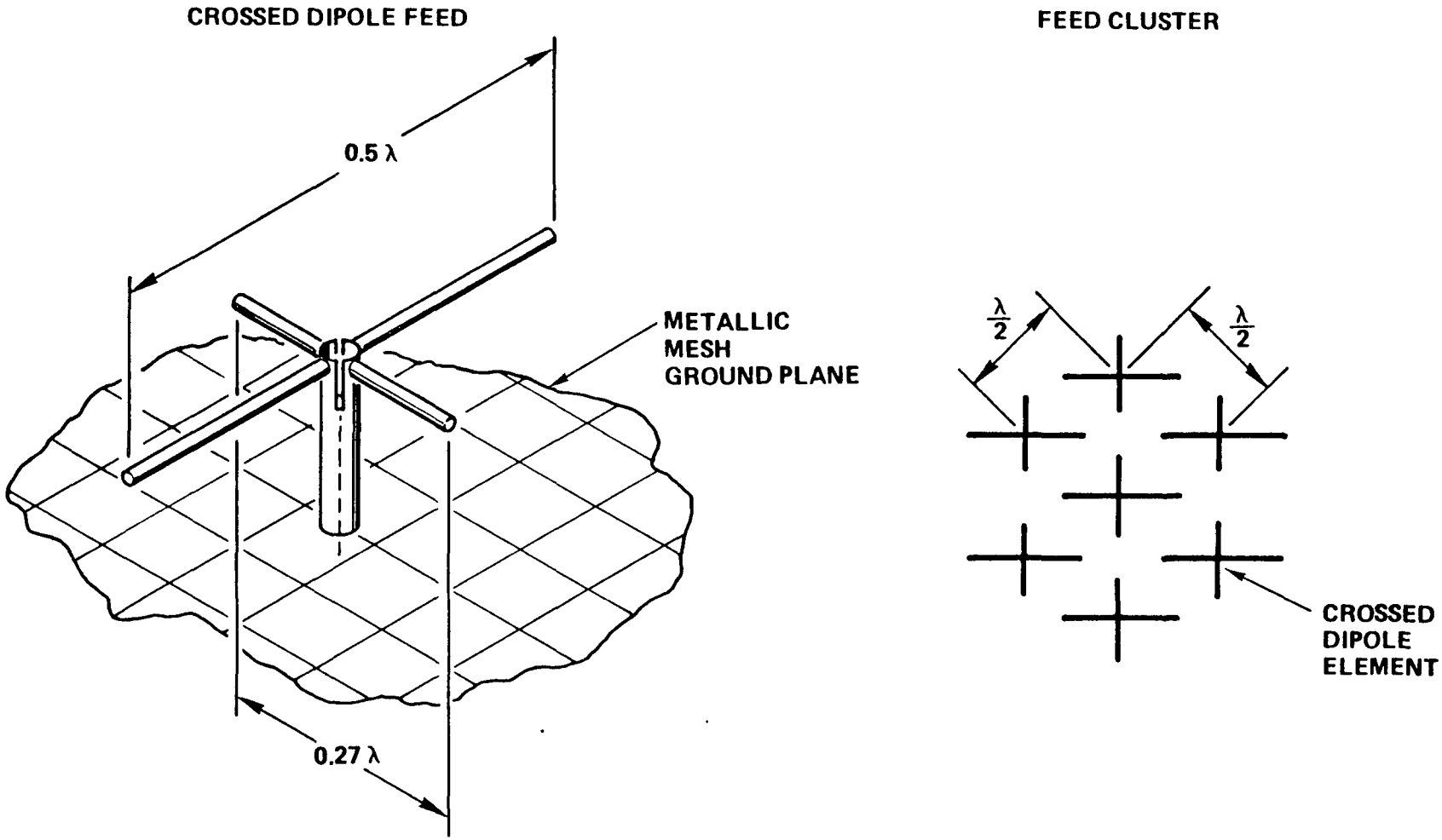

Figure 14. Feed Geometry for Reflector Antenna

The satellite concept for the 8-hour-orbit system is shown in Figure 15. The 8 by 8 element array, which is 80 meters on a side, produces a beamwidth of 6 degrees. Element spacing is one wavelength. The element selected is the short-backfire dipole (Figure 16). This element is short, mechanically rigid, self-supporting, and has a "flat-top" gain pattern. The latter feature is important in minimizing scan loss. Circular polarization is conveniently obtained by unequal-length dipoles. The antenna is very compact and lightweight, and can be designed to fold during launch.

By contrast with the Band 1 and 2 satellite designs, the Band 3 geostationary satellite (Figure 17) is comparable in weight to present-day (video) direct-broadcast satellites. The 16-ft antenna is required to produce a 3-degree beamwidth at 1.5 GHz. Individual transmitters must support as many as three separate voice channels. The transmitter output power in this multicarrier mode is 210 watts, which is three times the per-carrier requirement of 70 watts.

Besides the antenna development (whether cable-catenary or phased-array) for the Band 1 and 2 satellite designs, other critical technologies include the electrical power subsystem and the transmitters (Figure 18). Silicon solar cells of 2-mil thickness have been assumed throughout. Cells of this thickness have been developed in 2 x 4 cm size. From a cost standpoint, larger cells (e.g., 3 x 6 cm) of 2-mil thickness are needed for an array generating on the order of 100 kW. To avoid excessive distribution losses, a 200-V distribution system is needed. This level of distribution voltage is likely to be developed for Space Station. There is also a need for lightweight, flexible cabling material, particularly with the large dimensions of the Band 1 geostationary satellite.

High-power transmitter development is crucial to Band 1 and 2 operation. Individual power amplifier outputs are about 10 kW for the Band 1 geostationary satellites and the Band 2 Molniya satellites, and about 1 kW for the 8-hour Band 1 system. The high reliability and high efficiency of MOS-FET devices makes them the preferred power-amplifier technology, provided the indicated power levels can be achieved.

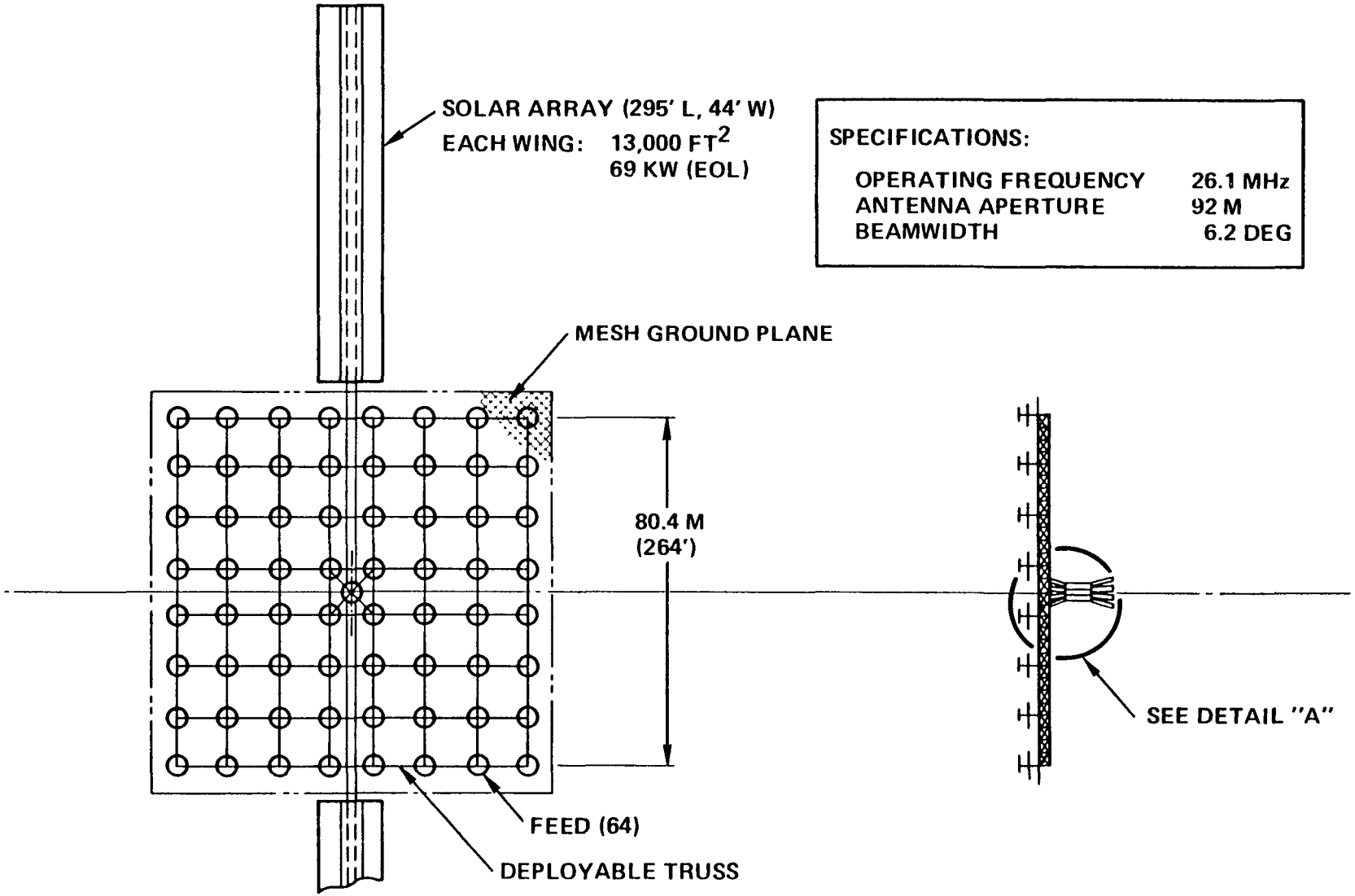

Figure 15. Satellite Concept for 8-Hour Orbit

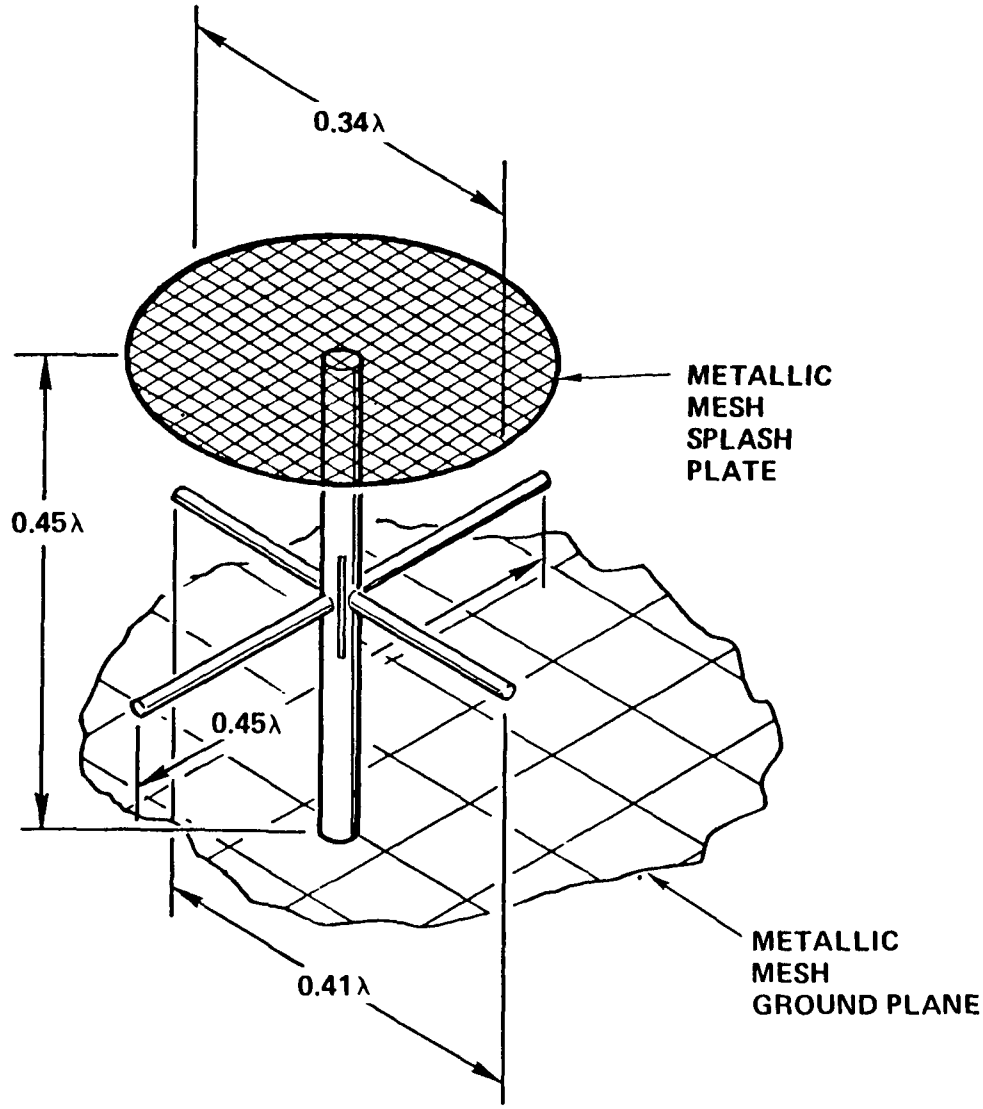

Figure 16. Short-Backfire Dipole Element for Phased-Array Antenna

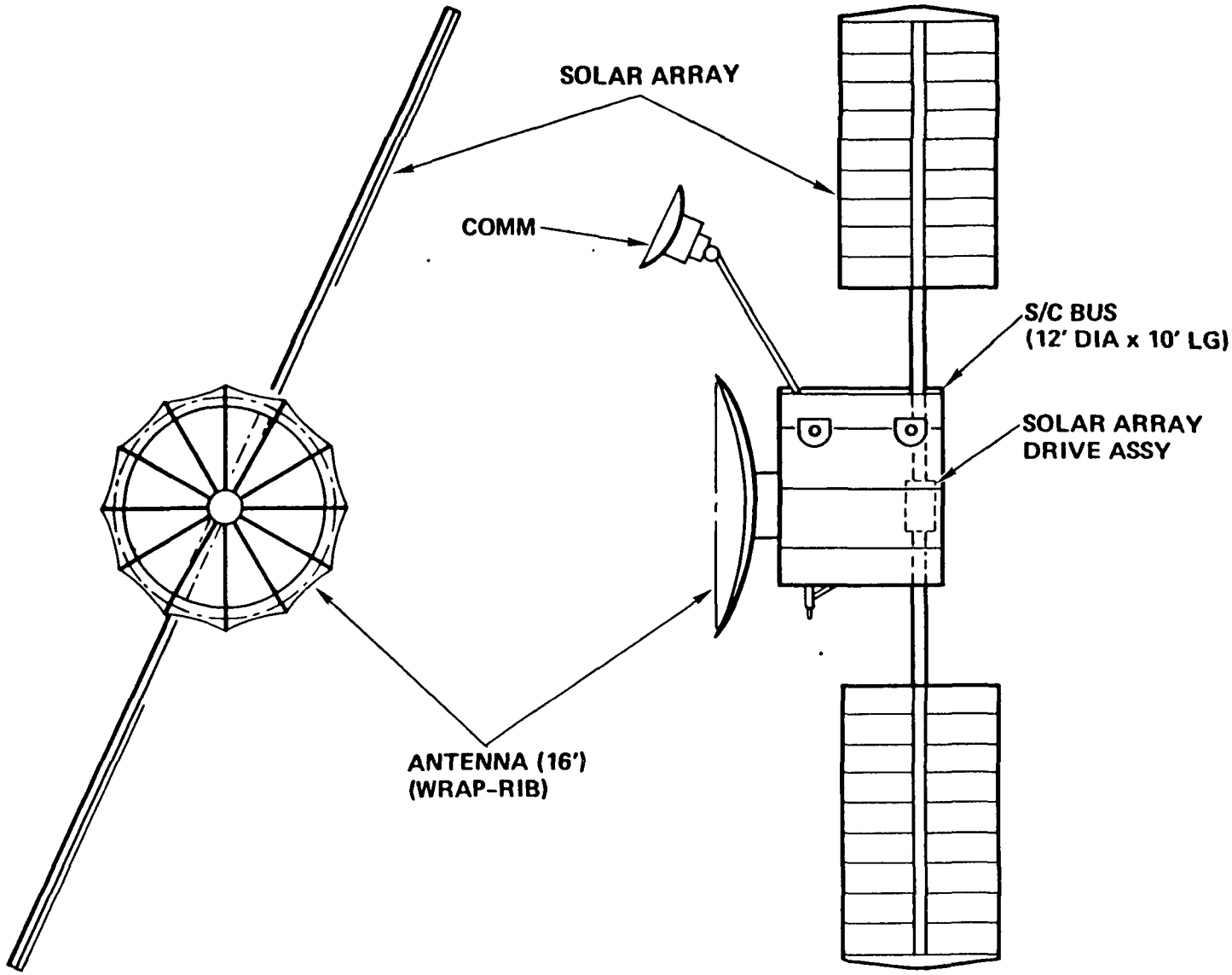

Figure 17. Band 3 Geostationary Satellite

SUBSYSTEM OR TECHNOLOGY	SYSTEM 1	SYSTEM 2	SYSTEM 3	SYSTEM 4
ANTENNA				○
CABLE CATENARY	●		●	
PHASE ARRAY		●		
TT&C	○	○	○	○
ACS	●	○	●	○
RCS	○	○	○	○
STRUCTURE	○	○	○	○
THERMAL	○	◒	○	○
EPS				○
SOLAR CELLS	●	●	●	
200 V DISTRIBUTION	●	●	●	
ALUMINUM CABLING	●	◒	○	
PAYLOAD				
TRANSMITTER	●	●	●	◒

● CRITICAL TECHNOLOGY DEVELOPMENT REQUIRED

◒ TECHNOLOGY DEVELOPMENT DESIRABLE, BUT NOT ESSENTIAL (PERFORMANCE DEGRADATION MAY RESULT)

○ TECHNOLOGY EXISTS

Figure 18. Critical Technology Identification

It is anticipated that the emphasis by the Japanese government on solid-state devices for commercial broadcasting will propel MOS-FET development to the power levels needed for Bands 1 and 2.

The evolutionary expectations for solid-state devices in Bands 1 and 2 do not apply to Band 3. There is no apparent commercial impetus for development of MOS-FETs or other devices more efficient than current bipolar transistors. Unless the low (30-percent) efficiency of these transistors or the lower reliability of TWTs is acceptable, technology enhancement will be necessary to achieve the required Band 3 transmitter power levels.

The need for technology development in the area of attitude control is uncertain at this point. This question should be resolved by further analysis. Pending this determination, altitude control has been labeled as a critical technology in Figure 18.

5. SINGLE-CHANNEL SATELLITE BROADCAST SYSTEMS

The original set of broadcast requirements (as embodied in the broadcast schedule of Figure 4) led to Band 1 satellite systems comprising many satellites of extremely large physical dimensions, with very large costs. As a result, TRW was directed to perform an additional task to determine the broadcast capability that can be derived from a single satellite with sufficient power to broadcast just one voice channel. Three values of field strength — 300 μV/m (the baseline value), 150 μV/m, and 50 μV/m — were to be considered.

Six different orbits were examined. These include geostationary and Molniya orbits, as well as subsynchronous orbits with 6-, 8-, and 12-hour periods. The inclination of the 6- and 8-hour orbits is 28.5 degrees, while that of the 12-hour orbit is 37 degrees. The sixth orbit is referred to as a "triply-sync" orbit. It is a highly elliptical, sun-synchronous orbit, with apogee of 7843 kilometers, perigee of 521 kilometers, and inclination of 116.6 degrees. The orbit period is 3 hours. Apogee is placed at a latitude of 63.4 degrees, which is the maximum value achieved.

5.1 Satellite Visibility

Visibility for a geostationary satellite is simply described. The visible region is shown in Figure 19 as a function of latitude and longitudinal offset, for a minimum elevation angle of 20 degrees. Visibility periods for a satellite in Molniya orbit are immediately evident from a set of instantaneous visibility contours. Visibility contours valid for either of two consecutive 12-hour orbits are shown in Figure 20. The only distinction between the two orbit passes is that the longitudinal reference (i.e., the longitude of apogee) is shifted by 180 degrees.

Satellite visibility for each open contour in Figure 20 (e.g., for t = 4 hr) extends to all points above that contour. Visibility for the closed contours (e.g., t = 5 hr) is restricted to those points within the contour. Continuous satellite visibility for the period (t_1,t_2) requires that the observer be located above or within all open or closed contours, respectively, for times between t_1 and t_2. Visibility regions for various minimum periods are indicated in Figure 20.

The triply-sync orbit offers the possibility of several significant (from a broadcast standpoint) visibility periods per day. Moreover, these visibility periods occur at the same local time each day. Figure 21 shows the period of visibility for three different latitudes as a function of displacement from the longitude of apogee. Because of the 3-hour orbit period, a given latitude is crossed, in either the north-south or south-north direction, at a longitudinal separation of 45 degrees on successive orbits. Therefore, dividing the longitudinal span over which the visibility period is approximately constant by 45 degrees gives the number of successive orbits on which this degree of visibility is realized.

Satellite visibility is summarized below for the three values of observer latitude. For a latitude of 20 degrees, visibility during one pass in the middle of the sequence will be less than 30 minutes.

Latitude (Degrees)	Period of Visibility (Min)	Number of Passes
60	50	5
40	50	4
20	30	6

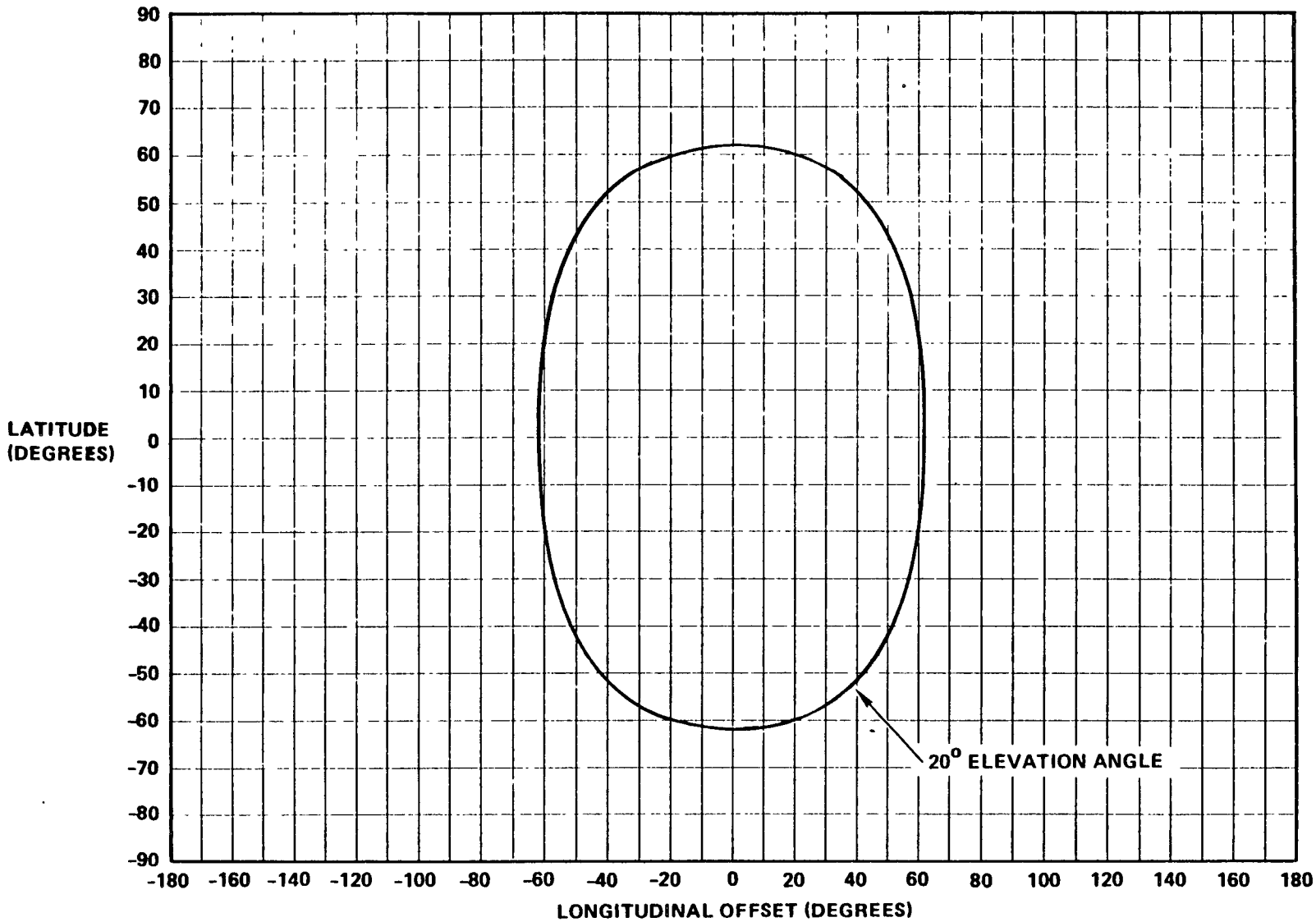

Figure 19. Geostationary Satellite Visibility

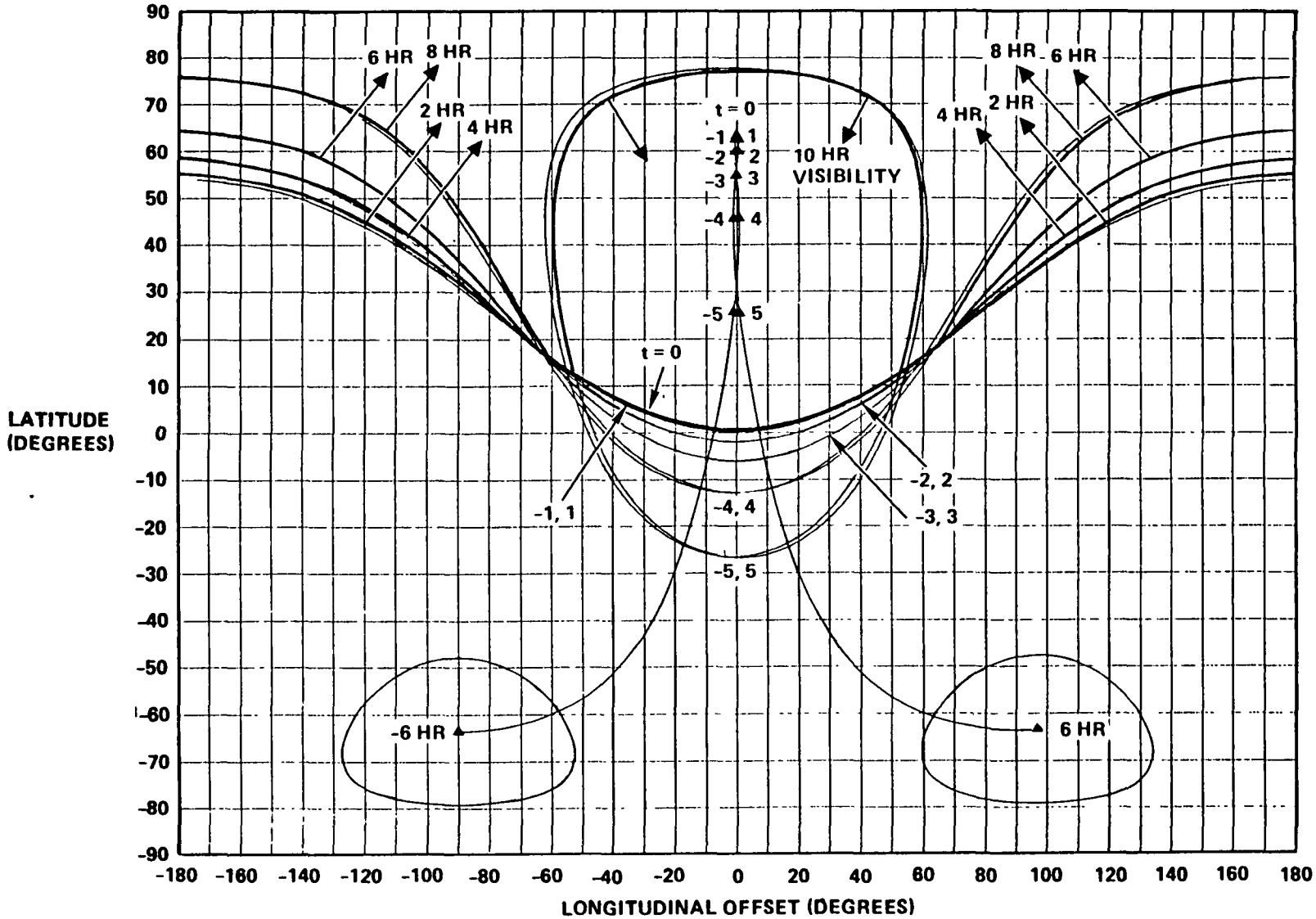

Figure 20. Satellite Visibility Periods for Molniya Orbit

ORIGINAL PAGE IS OF POOR QUALITY

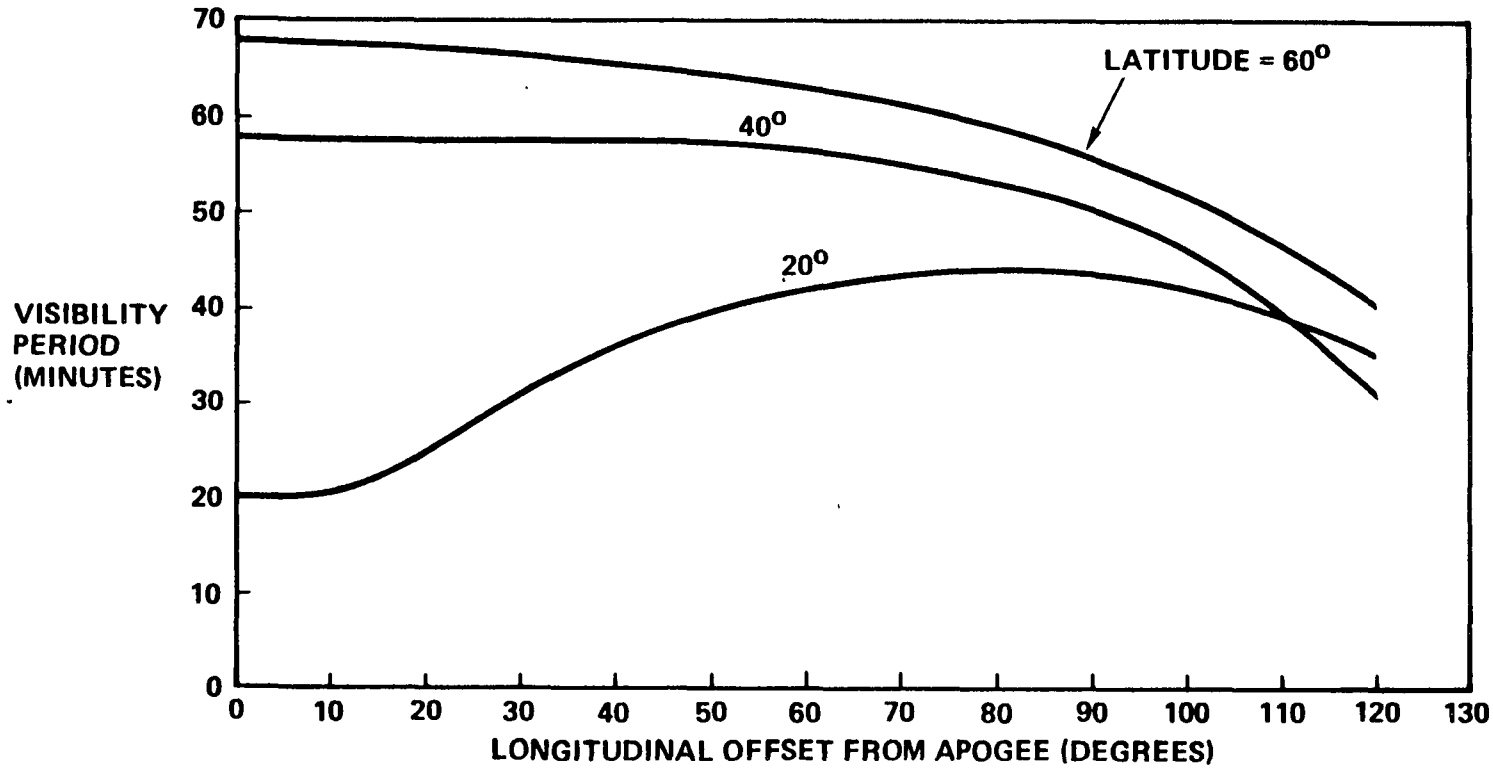

Figure 21. Visibility Period for Triply-Sync Orbit

Visibility of a satellite in subsynchronous orbit will be described as a function of observer latitude and longitudinal separation from the satellite ascending node. For a 6-hour orbit, there can be as many as three separate visibility periods daily; for an 8-hour orbit, two visibility periods; and for a 12-hour orbit, only one visibility period. Visibility periods for the three orbits are shown in Figures 22-24, for an observer located at the longitude of the ascending node. Visibility is considered only in multiples of 1/2-hour. In extreme cases, therefore, the visibility periods may be understated by nearly 1 hour.

Because of the wide range of required field strengths and the need for only a single voice channel, suitable orbital transfer vehicles (OTVs) range from the Centaur class to the PAM-A. In addition to these two OTVs, a custom bipropellant second stage was considered. For each of the 18 orbit/field strength combinations, a representative set of satellite characteristics was determined in conjunction with the choice of an appropriate OTV. The results are shown in Figure 25.

Since no antenna beamwidth is specified, a tradeoff exists between antenna aperture and RF power. The approach adopted is to minimize the antenna aperture. The resulting beamwidth is indicated in each case. For the geostationary, Molniya, and triply-sync orbits, the aperture refers to a reflector type of antenna. For the three circular, subsynchronous orbits, the aperture size is the dimension of a phased array.

The satellite weights in all but three cases reflect the benefits of advanced technology, circa 1995. For the 6-, 8-, and 12-hour orbits and a field strength requirement of 50 μV/m, the satellite weights reflect current technology. In all three cases, the antenna is of modest size. For the 6- and 8-hour orbits, the 11-meter aperture implies a 2 by 2 phased array.

Because the triply-sync orbit is confined to a radiation belt encircling the earth, silicon solar cells cannot be used. The three satellites designed for this orbit use a GaAs concentrator array, which is relatively impervious to radiation. Because of the considerable weight of this technology, fully half the satellite weight in each case is attributable to the electrical power subsystem.

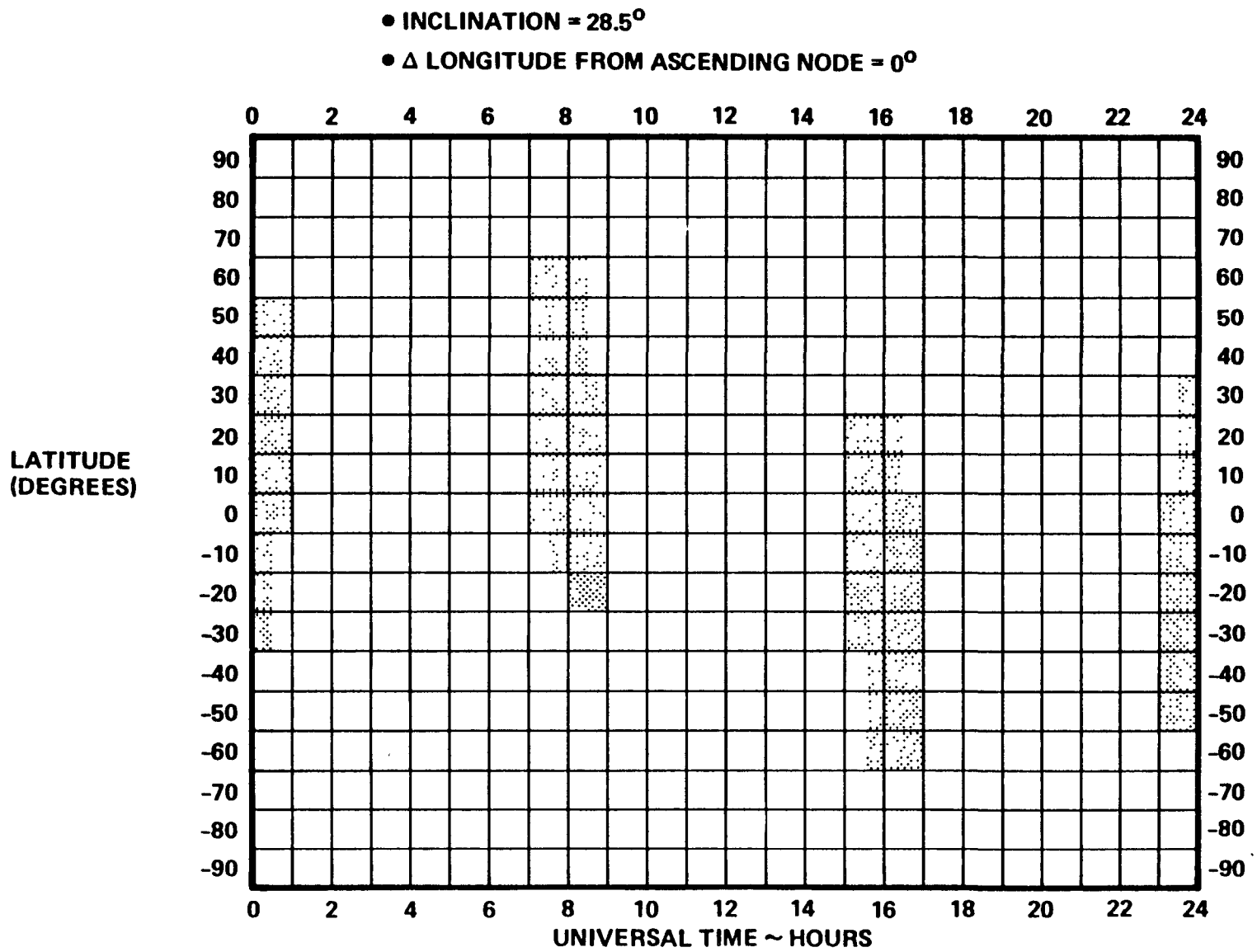

Figure 22. Single-Satellite Visibility for 6-Hour Circular Orbit

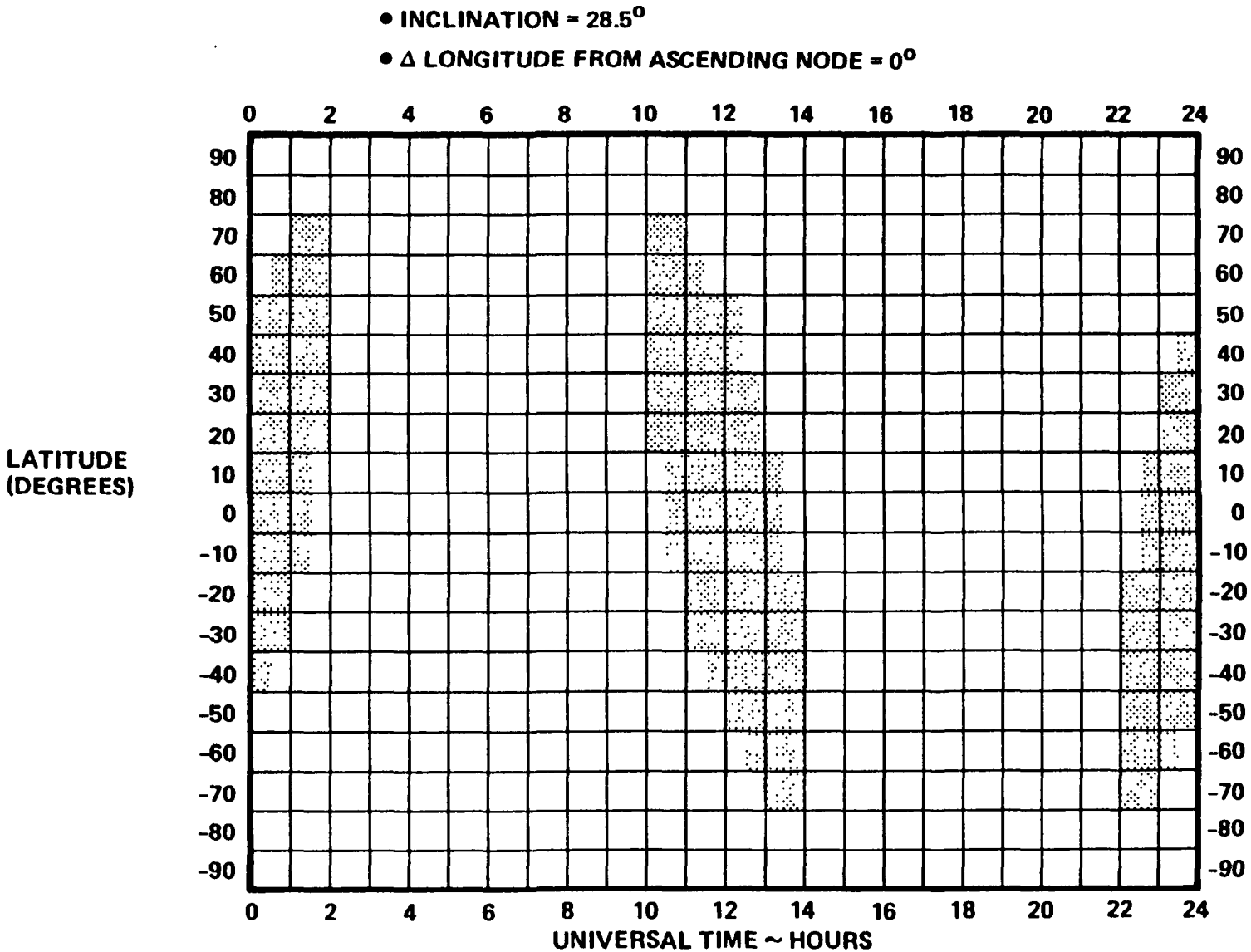

Figure 23. Single-Satellite Visibility for 8-Hour Circular Orbit

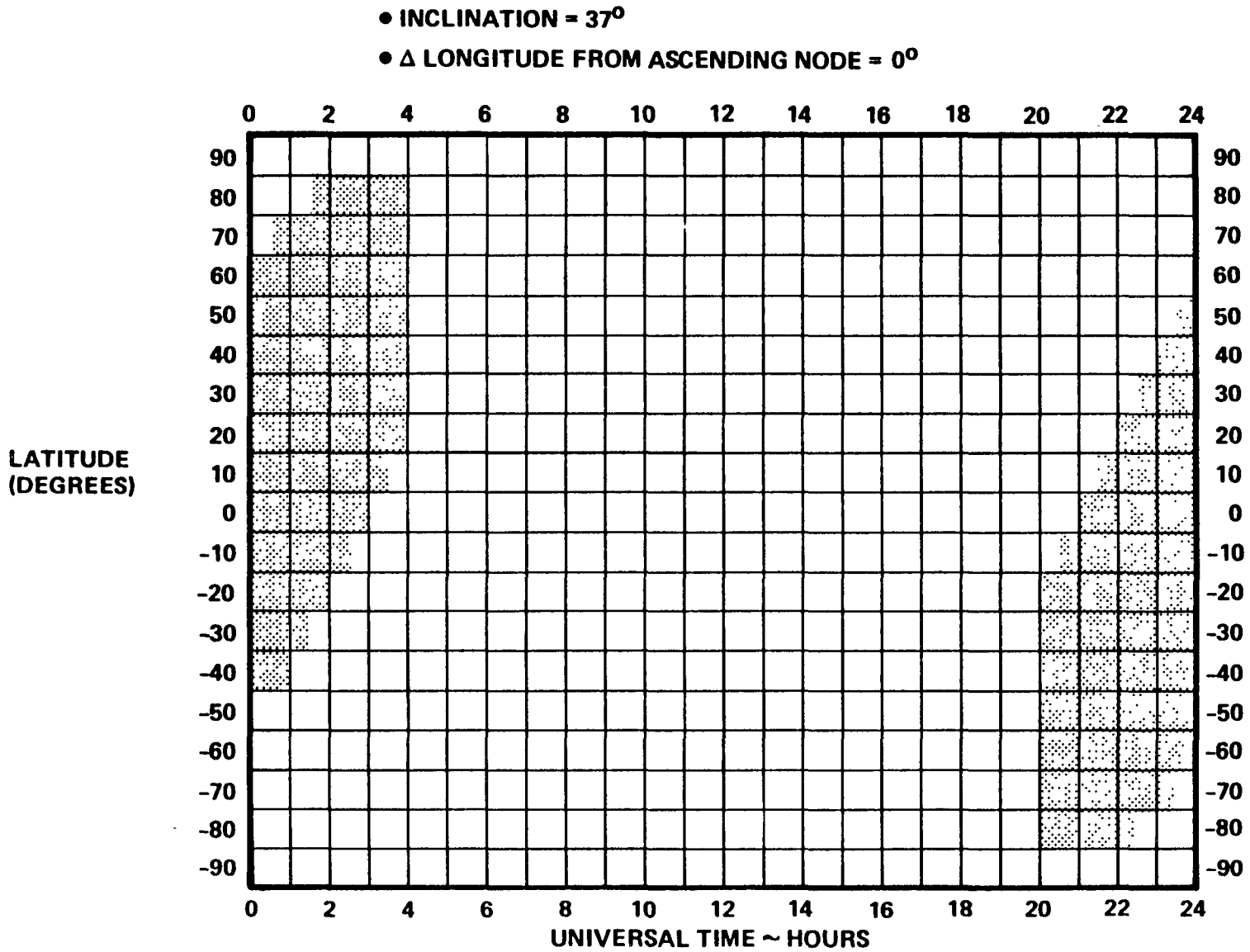

Figure 24. Single-Satellite Visibility for 12-Hour Circular Orbit

ORBIT	FIELD STRENGTH (μV/m)	ORBITAL TRANSFER VEHICLE	STS PAYLOAD TO LEO (LB)	EQUIVALENT GEO BEAMWIDTH (DEG)	ANTENNA APERTURE (M)	AVERAGE RF POWER (kW)	SATELLITE WEIGHT (LB)
GEO	300	CENTAUR	65,000	5.5	146	40	11,108
GEO	150	CENTAUR	65,000	12.2	66	50	11,051
GEO	50	CUSTOM BIPROP	40,000	20.0	40	15	4,209
MOLNIYA	300	CENTAUR	65,000	6.8	130	59	16,192
MOLNIYA	150	CENTAUR	65,000	14.4	62	66	16,143
MOLNIYA	50	CUSTOM BIPROP	40,000	28.0	32	28	7,302
TRIPLY SYNC	300	CUSTOM BIPROP	30,000	3.4	71	15	9,564
TRIPLY SYNC	150	CUSTOM BIPROP	30,000	7.2	33	17	9,629
TRIPLY SYNC	50	PAM-A	20,700	16.6	14	10	5,861

Figure 25. Representative OTV/Satellite Characteristics for Single-Channel Capability at 26 MHz

ORBIT	FIELD STRENGTH (μV/m)	ORBITAL TRANSFER VEHICLE	STS PAYLOAD TO LEO (LB)	EQUIVALENT GEO BEAMWIDTH (DEG)	ANTENNA APERTURE (M)	AVERAGE RF POWER (kW)	SATELLITE WEIGHT (LB)
6 HR	300	CUSTOM BIPROP	40,000	5.0	34	32	9,313
6 HR	150	CUSTOM BIPROP	38,000	10.0	11	32	8,526
6 HR	50	PAM-A	13,000	10.0	11	3.5	4,070*
8 HR	300	CUSTOM BIPROP	42,000	5.0	46	31	8,302
8 HR	150	CUSTOM BIPROP	38,000	10.0	17	31	7,109
8 HR	50	PAM-A	14,500	12.0	11	5.0	4,950*
12 HR	300	CUSTOM BIPROP	56,000	5.0	65	31	10,082
12 HR	150	CUSTOM BIPROP	48,000	10.0	28	31	8,222
12 HR	50	CUSTOM BIPROP	21,000	13.0	19	5.7	5,860*

*BASED ON CURRENT TECHNOLOGY

Figure 25. Representative OTV/Satellite Characteristics for Single-Channel Capability at 26 MHz (Continued)