DAA/ AMES

VTL TR 196-8

INDIVIDUAL-BLADE-CONTROL RESEARCH IN THE MIT VTOL TECHNOLOGY LABORATORY 1977-1985

by

Norman D. Ham

Final report covering the period November 1977 to November 1985. Related research continues under NASA Cooperative Agreement NCC 2-366. Wayne Johnson was NASA Technical Officer.

June 1986

Distribution of this report is provided in the interest of information exchange. Responsibility for the contents resides in the author or organization that prepared it.

Prepared under Research Grant No. NSG-2266 by

VTOL Technology Laboratory
Department of Aeronautics and Astronautics
Massachusetts Institute of Technology
Cambridge, Massachusetts 02139

for

AMES RESEARCH CENTER
NATIONAL AERONAUTICS AND SPACE ADMINISTRATION
MOFFETT FIELD, CALIFORNIA 94035

(NASA-CR-177121) INDIVIDUAL-BLADE-CONTROL RESEARCH IN THE MIT VTOL TECHNOLOGY LABORATORY 1977-1985 Final Report, Nov. 1977 - Nov. 1985 (Massachusetts Inst. of Tech.) 40 p CSCL 01C G3/08

N86-28954

Unclas 43250

HELICOPTER INDIVIDUAL-BLADE-CONTROL RESEARCH AT MIT 1977-1985

Norman D. Ham

Director, VTOL Technology Laboratory
Department of Aeronautics and Astronautics
Massachusetts Institute of Technology
Cambridge, Massachusetts 02139

Abstract

A new, advanced system for active control of helicopters and its application to the solution of rotor aerodynamic and aeroelastic problems is described. Each blade is individually controlled in the rotating frame over a wide range of frequencies. Application of the system to gust alleviation, attitude stabilization, vibration alleviation, blade lag damping augmentation, stall flutter suppression, blade flapping stabilization, stall alleviation, and performance enhancement is outlined. The effectiveness of the system in achieving most of these applications is demonstrated by experimental results from wind tunnel tests of a model helicopter rotor with individual-blade-control. The feasibility of achieving many or all of the applications of individual-blade-control using the conventional helicopter swash plate is demonstrated, and the necessary control laws are presented.

This research was sponsored by the Ames Research Center, NASA, Moffett Field, California 94035. Special acknowledgment is due to Robert M. McKillip, Jr., and Paul H. Bauer for their contributions at MIT.

1. INTRODUCTION

A truly advanced helicopter rotor must operate in a severe aerodynamic environment with high reliability and low maintenance requirements. This environment includes:

(1) atmospheric turbulence (leading to impaired flying qualities, particularly in the case of hingeless rotor helicopters).

(2) retreating blade stall (leading to large torsional loads in blade structure and control system).

(3) blade-vortex interaction in transitional and nap-of-the-earth flight (leading to unacceptable higher harmonic blade bending stresses and helicopter vibration).

(4) blade-fuselage interference (leading to unacceptable higher harmonic blade bending stresses and helicopter vibration).

(5) blade and rotor instabilities (leading to structural failure or loss of control).

The application of feedback techniques make it possible to alleviate the effects described in items (1) to (5) above, while improving helicopter vibration and handling characteristics to meet desired standards. The concept of Individual-Blade-Control (IBC), inspired by the work of M. Kretz, embodies the control of broadband electrohydraulic actuators attached to each blade or to the swash plate, using signals from sensors mounted on the blades to supply appropriate control commands to the actuators [1-26]. Note that IBC involves not just control of each blade independently, but also a feedback loop for each blade in the rotating frame. In this manner it becomes possible to reduce the severe effects of atmospheric turbulence, retreating blade stall, blade-vortex interaction, blade-fuselage interference, and blade and rotor instabilities, while providing improved performance and flying qualities.

It is evident that the IBC system will be most effective if it is comprised of several sub-systems, each controlling a specific mode, e.g., the blade flapping mode, the first blade flatwise bending mode, the first blade lag mode, and the first blade torsion mode [1]. Each sub-system operates in its appropriate frequency band:

Consider the modal equation of motion

$$m\ddot{x} + c\dot{x} + kx = F(t) + \Delta F \tag{1}$$

where the modal control force ΔF is

$$\Delta F = K_A m\ddot{x} - K_R c\dot{x} - K_P kx \tag{2}$$

Then substituting (2) into (1)

$$(1+K_A)m\ddot{x} + (1+K_R)c\dot{x} + (1+K_P)x = F(t)$$

For the case $K_A = K_R = K_P = K$

$$m\ddot{x} + c\dot{x} + kx = [1/(1+K)]\ F(t)$$

and the modal response is attenuated by the factor $1/(1+K)$ while the modal damping and natural frequency are unchanged.

For modal damping augmentation, only the rate feedback $\Delta F = -K_R c\dot{x}$ is required.

The configuration considered in [1-14] employs an individual actuator and multiple feedback loops to control each blade. These actuators and feedback loops rotate with the blades and, therefore, a conventional swash plate is not required. However, some applications of individual-blade-control can be achieved by placing the actuators in the non-rotating system and controlling the blades through a conventional swash plate as described in Section 9 and in [15, 17].

The following sections describe the design of a system controlling blade flapping, bending, lag, and torsion dynamics, and related testing of the system on a model rotor in the wind tunnel. The control inputs considered are blade pitch changes proportional to blade flapping and bending acceleration, velocity, and displacement, and lag and torsion velocity. It is then shown that helicopter gust alleviation, attitude stabilization, vibration alleviation, and 1P lag damping augmentation can be achieved using the conventional helicopter swash plate for an N-bladed rotor where $N>3$. For $N\leq 3$, all applications can be achieved.

2. GUST ALLEVIATION

References [2-4] describe the application of IBC to helicopter gust alleviation. The feedback blade pitch control was proportional to blade flapping acceleration and displacement, i.e.,

$$\Delta\theta = -K\left(\frac{\ddot{\beta}}{\Omega^2} + \beta\right)$$

A block diagram of the control system is shown in Figure (1).

Figures (2) and (3) show the effect of increasing the open-loop gain K upon the IBC gust alleviation system performance. Note that the experimental reduction in gust-induced flapping response is in accordance with the theoretical closed-loop gain $1/(1+K)$.

The Lock number of the model blade was 3.0. For a full size rotor, the increase in damping due to the increase in Lock number results in the flapping at excitation frequency becoming the dominant response. Also, with increased blade damping it becomes possible to use higher feedback gain for the same stability level, and as a consequence the IBC system performance improves with increasing Lock number.

Following the successful alleviation of gust disturbances using the IBC system, [2-4] showed the theoretical equivalence of blade flapping response due to atmospheric turbulence and that due to other low-frequency disturbances, e.g., helicopter pitch and roll attitude; therefore these disturbances can also be alleviated by the IBC system, as shown in the following section.

3. ATTITUDE STABILIZATION

References [13, 15] present an analysis of the effect of the IBC system on helicopter longitudinal attitude stability for feedback pitch control given by

$$\Delta\theta = -K_A \frac{\ddot{\beta}}{\Omega^2} - K_R \frac{\dot{\beta}}{\Omega} - K_P\beta$$

For small displacements of the rotor tip-pat h-plane from equilibrium, and not including coupling with lateral flapping that is negligible at low frequency and for $K_P = K_A$, [13, 15] obtain the following perturbation relationship between shaft angle α and longitudinal flapping β_{1_c}:

$$\Delta\alpha - \Delta\beta_{1_c} = A\,\Delta\frac{\dot{\beta}_{1_c}}{\Omega} + B\Delta\beta_{1_c} \qquad (3)$$

where $$A = 2[1 + \frac{\gamma}{8} K_A (1 + \frac{3}{2}\mu_0^2)]/\frac{\gamma}{8}(1 + \frac{3}{2}\mu_0^2)$$

$$B = K_R - (2\mu_0^2)/(1 + \frac{3}{2}\mu_0^2)$$

and the subscript zero denotes trim conditions. Figure 4 indicates that any effect tending to increase the quantity $\Delta\alpha - \Delta\beta_{1_c}$ produces a stabilizing moment $Th\,(\Delta\alpha - \Delta\beta_{1_c})$ about the helicopter center-of-gravity. Therefore, positive terms on the RHS of equation (3) are stabilizing. It is seen that the IBC system increases the rotor damping-in-pitch parameter A and the rotor angle-of-attack stability parameter B.

Equation (3) was used to investigate the effect of the IBC system on helicopter longitudinal attitude stability at various forward speeds. Stability parameters A and B are plotted in Figures 5 and 6 as a function of trim advance ratio μ_0 for helicopter having a blade Lock number γ=8 and IBC open loop gains $K_A = K_R = K_P = 0.5$ [13, 15]. (See either reference for the effect of K_P). For these arbitrary values, it is seen that the rotor disk longitudinal damping-in-pitch is increased over fifty per cent (Figure 5), while the rotor disk angle-of-attack dependence changes from unstable to stable (Figure 6).

The physical origin of these effects is as follows. To precess the rotor disk with a longitudinal pitching velocity $\Delta\dot{\beta}_{1_c}$, the rotor disk must lag behind the shaft an amount $(\Delta\alpha - \Delta\beta_{1_c})$ to generate the necessary rolling moment. Since the $K_A\,\ddot{\beta}/\Omega^2$ feedback represents an effective increase in blade flapping inertia, the required lag is increased, thus increasing the stabilizing moment proportional to $\dot{\beta}_{1_c}$, i.e., rotor damping-in-pitch. The rotor angle-of-attack instability is proportional to disk attitude perturbations $\Delta\beta_{1_c}$. The $K_R\,\dot{\beta}/\Omega$ feedback opposes increases in disk attitude β_{1_c}

(defined positive nose down) through the flapping velocity perturbation $\Delta\dot{\beta} = -\beta_{1_c}\Omega \sin\varphi$ which produces an aerodynamic moment opposing $\Delta\beta_{1_c}$, the tendency of the disk to follow the shaft is reduced, producing a perturbation lag $(\Delta\alpha - \Delta\beta_{1_c})$ and a stabilizing moment proportional to $\Delta\beta_{1_c}$, i.e., rotor longitudinal angle-of-attack stability.

Roll attitude stabilization also results from the IBC system described above. If it were desired to reduce the roll stabilization due to the helicopter rolling inertia being less than its pitching inertia, gains could be varied with blade azimuth angle.

Attenuation of the response to pilot's control can be prevented by biasing the feedback signals by a signal proportional to stick displacement.

4. VIBRATION ALLEVIATION

A major source of helicopter higher harmonic vertical vibration is the blade flatwise response to the impulsive loading due to blade-vortex or blade-fuselage interaction. If the blade flatwise response is controlled, the higher harmonic vertical vibration will be correspondingly reduced [8, 9, 19].

This section begins with the application of the IBC concept to control of the blade first elastic flatwise bending mode. (Control of the flapping mode is similar in principle.) To achieve this, a servomotor controls the pitch angle of the blade whose flatwise bending acceleration and displacement are sensed by accelerometers, and an integrator yields the flatwise bending velocity. Combinations of these signals are fed back to the blade pitch control to effect increases in the effective inertia, damping, and stiffness of the blade first elastic flatwise bending mode.

Consider the blade shown in Figure (7) to be responding in both the flapping mode and the first elastic flatwise bending mode. The signal from an accelerometer placed at blade station x is given by

$$a_F/R\Omega^2 = x\ddot{\beta}/\Omega^2 + x\beta + \eta(x)\ddot{g}/\Omega^2 + x\eta'(x)g \qquad (4)$$

where R = rotor radius

Ω = rotor rotational speed

x = blade spanwise station r/R

$\beta(t)$ = blade flapping angle

$\eta(x)$ = first elastic flatwise bending mode shape

$g(t)$ = first elastic flatwise bending mode displacement

It is evident that if three flatwise-oriented accelerometers are mounted at three different spanwise stations, equation (4) yields three equations corresponding to the three spanwise stations. These equations can be solved for the three quantities $(\ddot{\beta}/\Omega^2 + \beta)$, $\ddot{g}/\Omega^2$, and g. Integration of $\ddot{g}/\Omega^2$ then yields bending rate $\dot{g}/\Omega$.

If $\ddot{\beta}/\Omega^2$ and β are required independently, or a hinge offset is present, then a fourth measurement is required.

The above technique provides all the information required to create the bending feedback signals $(\ddot{g} + \omega_g^2 g)$, $\dot{g}$, and if desired, the flapping feedback signals $(\ddot{\beta} + \Omega^2\beta)$ and/or $\dot{\beta}$.

The design of the control system is based on the root locus of the overall system, composed of a servomotor controlling the pitch motion of the blade, which is equipped with three accelerometers to provide the required feedback signals as described above.

The combined accelerometer transfer functions are given by

$$A_1(s) = \frac{R\Omega^2}{G}\left[\left(\frac{s}{\Omega}\right)^2 + \left(\frac{\omega_g}{\Omega}\right)^2\right]$$

and $$A_2(s) = \frac{R\Omega^2}{G}\left(\frac{s}{\Omega}\right)^2$$

where G = acceleration due to gravity

The integrator transfer function is given by

$$I(s) = \frac{s}{(s/3 + 1)^2}$$

Note the integrator low-frequency roll-off of 3 rad/sec to avoid the application of an infinite d.c. gain to any steady-state components in the accelerometer signal.

From the inner-loop block diagram shown in Figure (8), the closed loop transfer function $H(s)$ from g_D to g for $\gamma = 8$, $\Omega = 31.4$ rad/sec, $\omega_g/\Omega = 3$, and $K = 3$ is readily obtained [8, 9]. The corresponding inner-loop root locus is shown in Figure (9).

Then from the outer-loop block diagram in Figure (10), the final closed loop transfer function from g_D to g is obtianed. The corresponding outer-loop locus is shown in Figure (11).

Some preliminary test results are shown in Figure (12). It is seen that a reduction in bending response to $1/(1+K) = 0.25$ of the original value, i.e., an attenuation of 75% without significant change in bending natural frequency can thus be obtained. The control system achieves the desired attenuation of flatwise bending response, and presumably its associated vertical inertial vibratory shear, as postulated above.

In practice, only certain harmonics of the vertical vibration due to blade bending can be transmitted to the fuselage by an N-bladed rotor. These harmonics can be controlled using blade-mounted accelerometers as sensors and a conventional swash plate, as described in Section 9.

It should also be noted that suppression of blade flapping and flatwise bending responses and their corresponding in-plane Coriolis forces will tend to alleviate in-plane vibration as a beneficial by-product of vertical vibration alleviation.

5. LAG DAMPING AUGMENTATION

For lag damping augmentation, a servomotor controls the pitch angle of the blade whose lag acceleration is sensed by two accelerometers, and an integrator yields the lag velocity which is fed back through a compensator to the blade pitch control [7, 10]. A blade flapping velocity is thus generated which in the presence of blade coning angle, results in an in-plane moment due to Coriolis forces which opposes lag motion and is proportional to lag velocity (Figure 13).

A series of wind tunnel tests of this system was run utilizing white noise excitation of blade pitch. The results are shown in Figure (14) in terms of lag acceleration magnitude and phase as a function of pitch excitation frequency for the rotor at advance ratio 0.27.

The response phase angles shown Figure (14) are conclusive in demonstrating an increase in lag damping due to the control system. The figure shows a rotation of the slope of the phase angle versus frequency curve at lag resonance, in the direction of increased lag damping, as K_R is increased. The increase in lag damping ratio due to the control system was determined to be 0.37 at advance ratio 0.27. This value is incremental to the open loop value of 0.37 due to bearing friction.

6. STALL FLUTTER SUPPRESSION

References [2-4] showed that appropriate feedback to a position control servo governing blade pitch motion could reduce undesirable blade motions due to low-frequency gust inputs. Similar methods were applied to alleviate the violent torsional motions associated with stall flutter. At high blade angles of attack and certain reduced frequencies, aerodynamic moment hysteresis causes a net input of energy to blade torsional motion, so that any small blade oscillation grows with time. Such a situation is typical of simple oscillating systems with negative damping; stall flutter can be considered as a phenomenon caused by a variation in the effective damping of the blade in pitch. On the advancing side, the blade experiences strong positive damping at low angles of attack, but on the retreating side the effective damping can temporarily become negative, leading to the oscillations described above.

An effective stall flutter suppression system would eliminate this excursion into negative damping. One way to achieve this end is to provide pitch-rate feedback from the blade to the pitch control servo (Figure 15). The details of this concept, its implementation, and the results of experiments utilizing it are given in [5, 6].

Typical test results are shown in Figures (16 and 17) for an advance ratio of 0.33. Note that the stall flutter component is effectively suppressed with increasing feedback.

7. FLAPPING STABILIZATION AT HIGH ADVANCE RATIO

Since blade flap damping and restoring forces can be controlled using IBC techniques, the high-advance-ratio flapping instability of helicopter blades due to periodicity of these forces can be eliminated. The simplest method would be to increase the mean values of blade flap damping and

restoring forces by feedback of blade flapping velocity and displacement to blade pitch control as discussed in Section 1. However, this approach would not reduce the large periodicity of these forces at high advance ratio. A more sophisticated control technique to control this perioidicity is described below.

References [11, 16] describe the results of an investigation into methods of IBC controller design for linear periodic systems utilizing an extension of modern control methods. Trends present in the selection of various cost functions are outlined, and closed-loop controller results are demonstrated for two cases: first, on an analog computer simulation of the rigid out-of-plane flapping dynamics of a single rotor blade and second, on a model helicopter rotor in the wind tunnel, both for various high levels of advance ratio. It is shown that modal control using the IBC concept is possible over a large range of advance ratios with only a modest amount of computational power required.

Typical wind tunnel test results are shown in Figures (18) and (19) for open-and closed-loop cases at an advance ratio of 1.4. It is seen that periodic control of rotor blade flapping dynamics is feasible even for extreme flight conditions.

References [11, 16] also contain an excellent discussion of the unique advantages of using blade-mounted accelerometers as sensors in designing a blade modal control system.

8. STALL ALLEVIATION AND PERFORMANCE ENHANCEMENT

If rotor loading is increased in the fore and aft portions of the rotor disk and reduced in the lateral portions, the loaded retreating blades will be operating at higher angles of yaw and higher pitch reduced-frequencies than

before, with corresponding benefits in rotor stall alleviation and rotor performance. Such a change in rotor loading can be obtained with the blade pitch time history shown in Figure (20). Though a completely arbitrary pitch schedule is possible with IBC, for ease of description a simple super-position of 1P, 2P, and 3P pitch is employed [23].

Reference [12] considers only open-loop implementation of this pitch time history; subsequent applications may involve closed-loop variation of pitch amplitude and phase in accordance with some measure of blade stall onset such as the RMS value of blade lag acceleration.

The pitch time history shown in Figure (20) was tested on a model rotor in the wind tunnel. Application of 2P and 3P cyclic pitch eliminated high frequency blade lag accelerations believed to be associated with rotor blade stall. However, due to blade mechanical pitch limitations, substantial blade stall was not encountered, and therefore conclusive demonstration of the success of 2P and 3P cyclic pitch in alleviating more extreme rotor blade stall must await testing with increased model blade pitch capability.

Preliminary work has indicated that there are substantial performance increments to be obtained from the introduction of appropriate higher harmonic control to the helicopter rotor to reduce induced drag by re-distribution of blade loading. Since individual-blade-control is a generalization of higher harmonic control, similar benefits can be expected in this application.

Since it is possible to modify rotor loading distribution using IBC techniques as described above, it may be possible to reduce rotor noise signatures using these techniques.

9. HELICOPTER INDIVIDUAL-BLADE-CONTROL USING A CONVENTIONAL SWASH PLATE

Several important dynamic phenomena of the helicopter rotor occur at harmonics of rotor rotational speed:

(1) Gust-induced flapping, both quasi-steady and at 1P

(2) Shaft-motion-induced flapping, both quasi-steady and at 1P

(3) Airload-induced vibration at NP and (N±1)P

(4) Rotor fuselage air/ground resonance at 1P

(5) Tilt-rotor maneuvering loads at 1P

Sections 2, 3, and 4 have shown that individual-blade-control can alleviate items (1) to (3) above. Section 5 demonstrated that blade lag damping can be augmented using IBC to suppress items (4) and (5).

It is now shown that IBC can be implemented through a conventional swash plate to alleviate items (1) to (5) for N-bladed rotors:

The control requirement for the mth individual blade is

$$\theta_m = -K_A \frac{\ddot{\beta}_m}{\Omega^2} - K_R \frac{\dot{\beta}_m}{\Omega} - K_P \beta_m - k_A \frac{\ddot{g}_m}{\Omega^2} - k_R \frac{\dot{g}_m}{\Omega} - k_P g_m - K\dot{\zeta}_m$$

The corresponding control requirement for the swash plate is*

$$\theta = \theta_0 + \theta_{1_c} \cos\varphi + \theta_{1_c} \sin\varphi + \theta_2$$

Using the mathematics of Johnson*, P, 351, the control laws are

$$\theta_0 = \frac{1}{N} \sum_{m=1}^{N} \theta_m = 0 \text{ unless } n = pN$$

$$\theta_{1_c} = \frac{2}{N} \sum_{m=1}^{N} \theta_m \cos\varphi_m = 0 \text{ unless } n = pN \pm 1$$

$$\theta_{1_s} = \frac{2}{N} \sum_{m=1}^{N} \theta_m \sin\varphi_m = 0 \text{ unless } n = pN \pm 1$$

$$\theta_2 = 0 \text{ unless } n = pN \pm N/2 \text{ (Johnson*, P. 348)}$$

where p = any integer

n = rotor harmonic number

*Johnson, W., "Helicopter Theory", Princeton U.P., 1980

The physical significance of the above equations is that IBC of an N-bladed rotor having a conventional swash plate is possible for those IBC functions involving the zeroth (quasi-steady), first, pNth, and (pN±1)th harmonics of rotor speed, e.g., gust alleviation (p=0), attitude stabilization (p=0), vibration alleviation (p=1), and suppression of air/ground resonance and tilt-rotor maneuvering loads (p=0).

Note that all harmonics and in general any arbitrary time history of control are achievable with a three-bladed rotor using a conventional swash plate.

The summations of individual blade sensor signals required to obtain the swash plate collective and cyclic pitch components provide a filtering action such that only the desired harmonics 0P, 1P, NP, and (N±1)P remain after summation, i.e., no specific harmonic analysis is required. In addition, some smoothing of random noise in the signals may result.

Since all sensing is done in the blades, no transfer matrices from non-rotating to rotating system are required; therefore no updating of these matrices is required, and no non-linearity problems result from the linearization required to obtain the transfer matrices. Also, blade state measurements allow tighter vehicle control since rotor control can lead fuselage response: this lead should provide more effective gust alleviation and permit higher control authority without inducing rotor instabilities than would be possible without rotor state feedback.

The following equipment is required to implement IBC for gust alleviation and attitude stabilization of an N-bladed helicopter rotor:

(1) two flatwise accelerometers per blade.

(2) a means of transmitting signals from rotating to non-rotating system.

(3) swash plate actuator bandwidths up to disturbance frequency.

The following equipment is required to implement IBC for vibration alleviation of an N-bladed helicopter rotor:

(1) four flatwise accelerometers per blade.

(2) a means of transmitting signals from rotating to non-rotating system.

(3) swash plate actuator bandwidths up to (N+1)P.

The following equipment is required to implement IBC for suppression of air/ground resonance and tilt-rotor maneuvering loads of an N-bladed helicopter rotor:

(1) two lagwise accelerometers per blade.

(2) a means of transmitting signals from rotating to non-rotating system.

(3) swash plate actuator bandwidths up to disturbance frequency.

10. CONCLUSION

The preceding sections have demonstrated that the use of blade-mounted accelerometers as sensors makes possible the control of the flapping, flatwise bending, lag, and torsional modes of each blade individually. This control technique is applicable to helicopter rotor gust alleviation, attitude stabilization, vibration alleviation, lag damping augmentation, stall flutter suppression, blade flapping stabilization at high advance ratio, stall alleviation, and performance enchancement.

For rotors having three blades, any arbitrary pitch time history can be applied to each blade individually using the conventional swash plate. Rotors with more than three blades require individual actuators for each blade for

some applications; other applications such as gust alleviation, attitude stabilization, vibration alleviation, and lag damping augmentation (for suppression of air/ground resonance and tilt-rotor maneuvering loads) can be achieved using a conventional swash plate.

REFERENCES AND BIBLIOGRAPHY

Conferences and Journals:

1. Ham, N.D., "A Simple System for Helicopter Individual-Blade-Control Using Modal Decomposition", Vertica, 4, 1, 1980.

2. Ham, N.D. and McKillip, R.M., Jr., "A Simple System for Helicopter Individual-Blade-Control and Its Application to Gust Alleviation", Proc. Twenty-First AIAA Structures, Structural Dynamics, and Materials Conference, Seattle, WA, May 1980.

3. Ham, N.D. and McKillip, R.M., Jr., "A Simple System for Helicopter Individual-Blade-Control and Its Application to Gust Alleviation", Proc. Thirty-Sixth AHS Annual National Forum, Washington, D.C., May 1980.

4. Ham, N.D. and McKillip, R.M., Jr., "A Simple System for Helicopter Individual-Blade-Control and Its Application to Gust Alleviation", Proc. Sixth European Rotorcraft Forum, Bristol, U.K., September 1980.

5. Ham, N.D. and Quackenbush, T.R., "A Simple System for Helicopter Individual-Blade-Control and Its Application to Stall Flutter Suppression", Proc. Seventh European Rotorcraft Forum, Garmisch-Partenkirchen, FRG, September 1981.

6. Ham, N.D. and Quackenbush, T.R., "A Simple System for Helicopter Individual-Blade-Control and Its Application to Stall-Induced Vibration Alleviation", Proc. AHS National Specialists' Meeting on Helicopter Vibration, Hartford, CT, November 1981.

7. Ham, N.D., Behal, Brigitte L., and McKillip, R.M., Jr., "A Simple System for Helicopter Individual-Blade-Control and Its Application to Lag Damping Augmentation", Proc. Eighth European Rotorcraft Forum, Aix-en-Provence, France, September 1982.

8. Ham, N.D., "Helicopter Individual-Blade-Control and Its Applications", Proc. Thirty-Ninth AHS Annual National Forum, St. Louis, MO, May 1983.

9. Ham, N.D., "Helicopter Individual-Blade-Control and Its Applications", Proc. Ninth European Rotorcraft Forum, Stresa, Italy, September 1983.

10. Ham, N.D., Behal, Brigitte L. and McKillip, R.M., Jr., "Helicopter Rotor Lag Damping Augmentation Through Individual-Blade-Control", Vertica, 7, 4, 1983.

11. McKillip, R.M., Jr., "Periodic Control of the IBC Helicopter Rotor", Proc. Tenth European Rotorcraft Forum, The Hague, Netherlands, Aug. 184.

12. Ham, N.D., "Helicopter Stall Alleviation Using Individual-Blade-Control", Proc. Tenth European Rotorcraft Forum, The Hague, Netherlands, Aug. 1984.

13. Ham, N.D., "Helicopter Attitude Stabilization Using Individual-Blade-Control", Proc. Tenth European Rotorcraft Forum, The Hague, Netherlands, Aug. 1984.

14. Ham, N.D., "Active Controls", MIT ILP Symposium on Helicopter Technology, Cambridge, MA., Nov. 1984.

15. Ham, N.D., "Helicopter Gust Alleviation, Attitude Stabilization, and Vibration Alleviation Using Individual-Blade-Control Through a Conventional Swash Plate", Proc. Forty-First AHS Annual National Forum, Fort Worth, Texas, May 1985.

16. McKillip, R.M. Jr., "Periodic Control of the Individual-Blade-Control Helicopter Rotor", Vertica, 9, 2, 1985.

17. Ham, N.D., "Helicopter Gust Alleviation, Attitude Stabilization, and Vibration Allevation Using Individual-Blade-Control Through a Conventional Swash Plate", Proc. Eleventh European Rotorcraft Forum, London, U.K., September 1985.

Reports of the VTOL Technology Laboratory, MIT:

18. McKillip, R.M., Jr., "The Design Testing and Evaluation of the MIT Individual-Blade-Control System as Applied to Gust Alleviation for Helicopters", VTL TR 196-1, February 1980.

19. Rahnema, M.A., "Alleviation of Helicopter Fuselage-Induced Rotor Unsteady Loads through Deterministic Variation of the Individual Blade Pitch", VTL TR 196-2, May 1981.

20. Quackenbush, T.R., "Testing and Evaluation of a Stall-Flutter Suppression System for Helicopter Rotors Using Individual-Blade-Control", VTL TR 196-3, August 1981.

21. Behal, B.L., "Design and Testing of a Control System to Increase the Lag Damping of a Helicopter Blade", VTL TR 196-4, August 1982.

22. Ham, N.D., "A Preliminary Note on the Application of Individual-Blade-Control to Vertical Vibration Alleviation", VTL TR 196-5, October 1982.

23. Cole, C., The Electronic Swash Plate for Individual-Blade-Control", VTL TR 196-6, March 1984.

24. McKillip, R.M., Jr., "Periodic Control of the IBC Helicopter Rotor", VTL TR 196-7, August 1984.

25. Ham, N.D., "Individual-Blade-Control Research in the MIT VTOL Technology Laboratory 1977-1985", VTL TR 196-8, June 1986.

Patents:

26. Ham, N.D., "Helicopter Individual Blade Control System", U.S. Patent No. 4,519, 743, May 28, 1985.

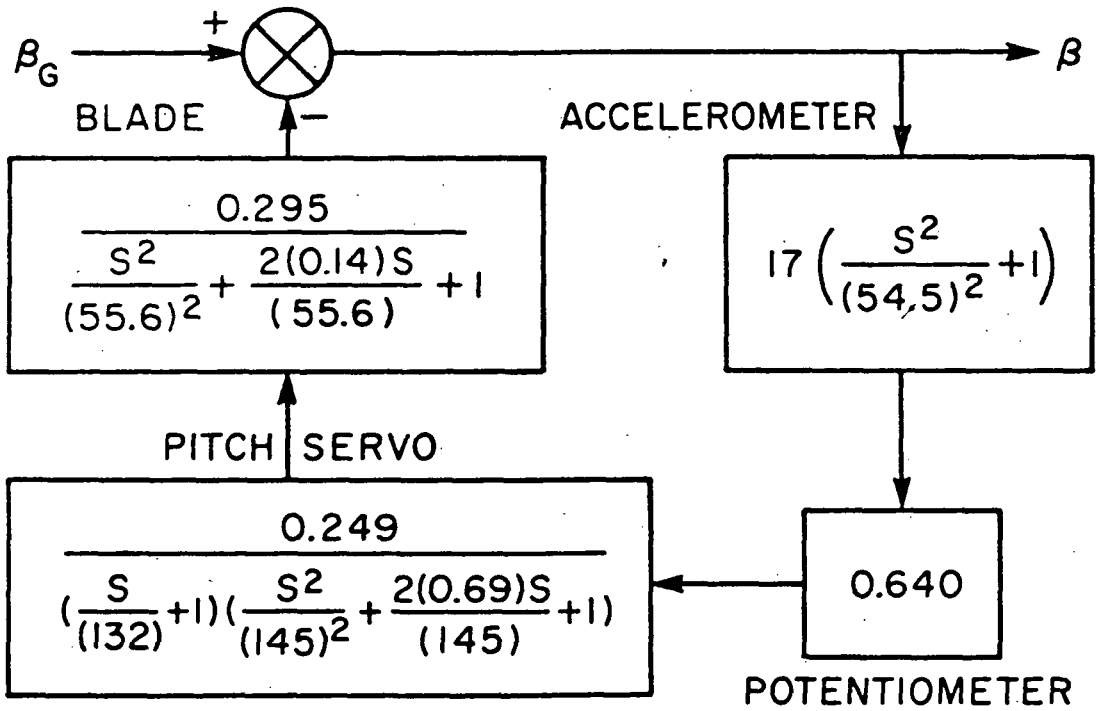

FIG. 1 Gust Alleviation System Block Diagram

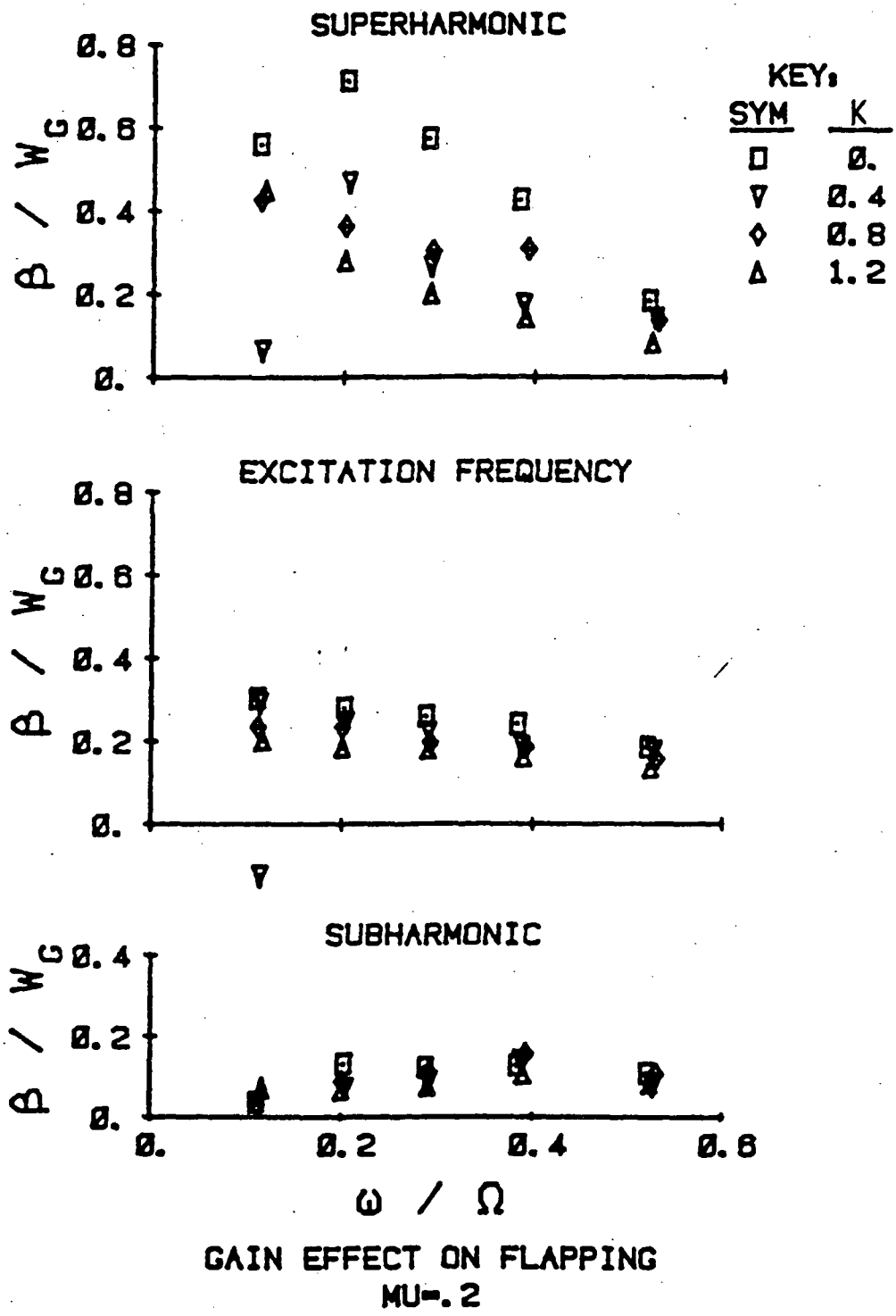

FIG. 2 Effect of Feedback Gain on Flap Response to Gust (μ = 0.2)

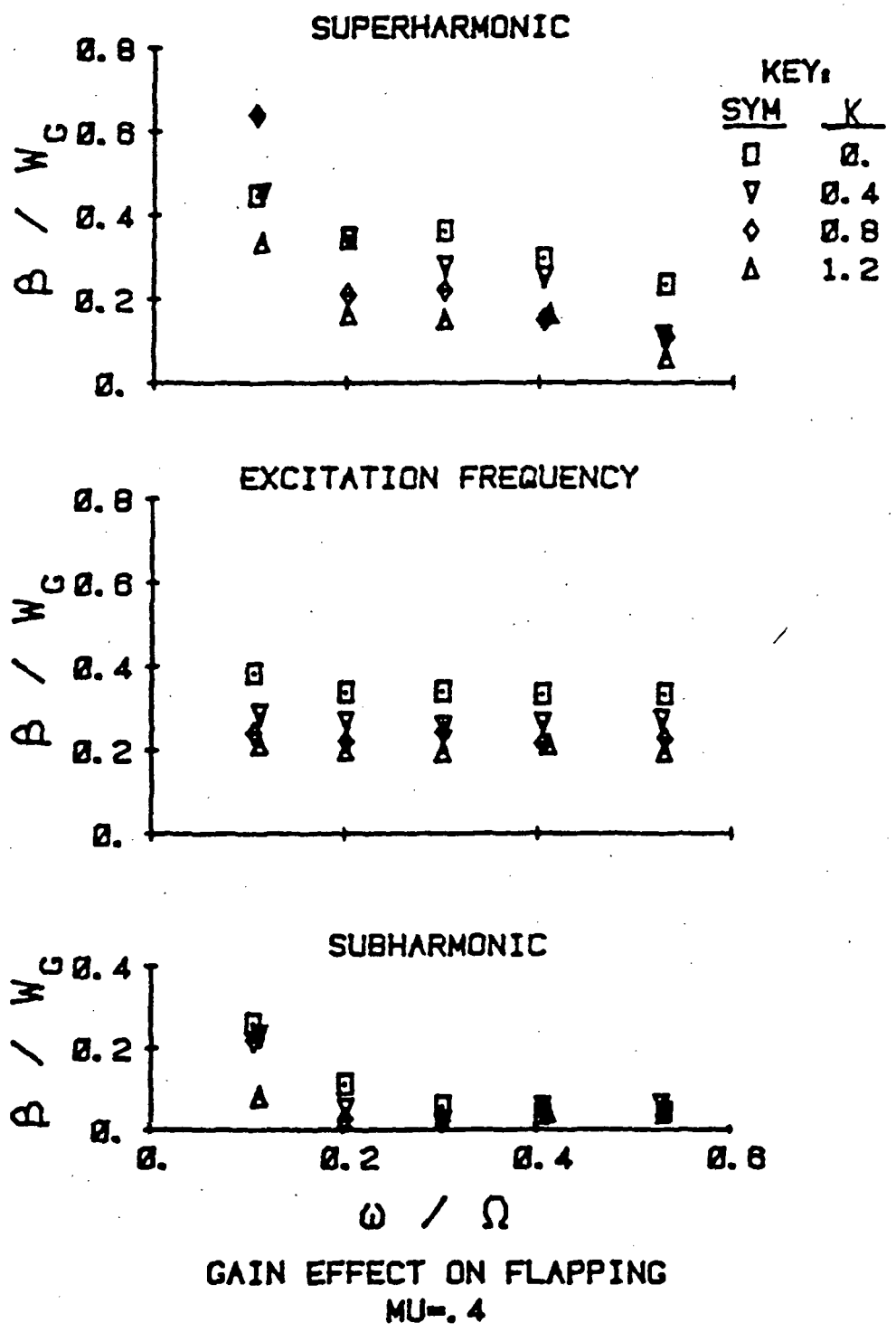

FIG. 3 Effect of Feedback Gain on Flap Angle Response to Gust (μ = 0.4)

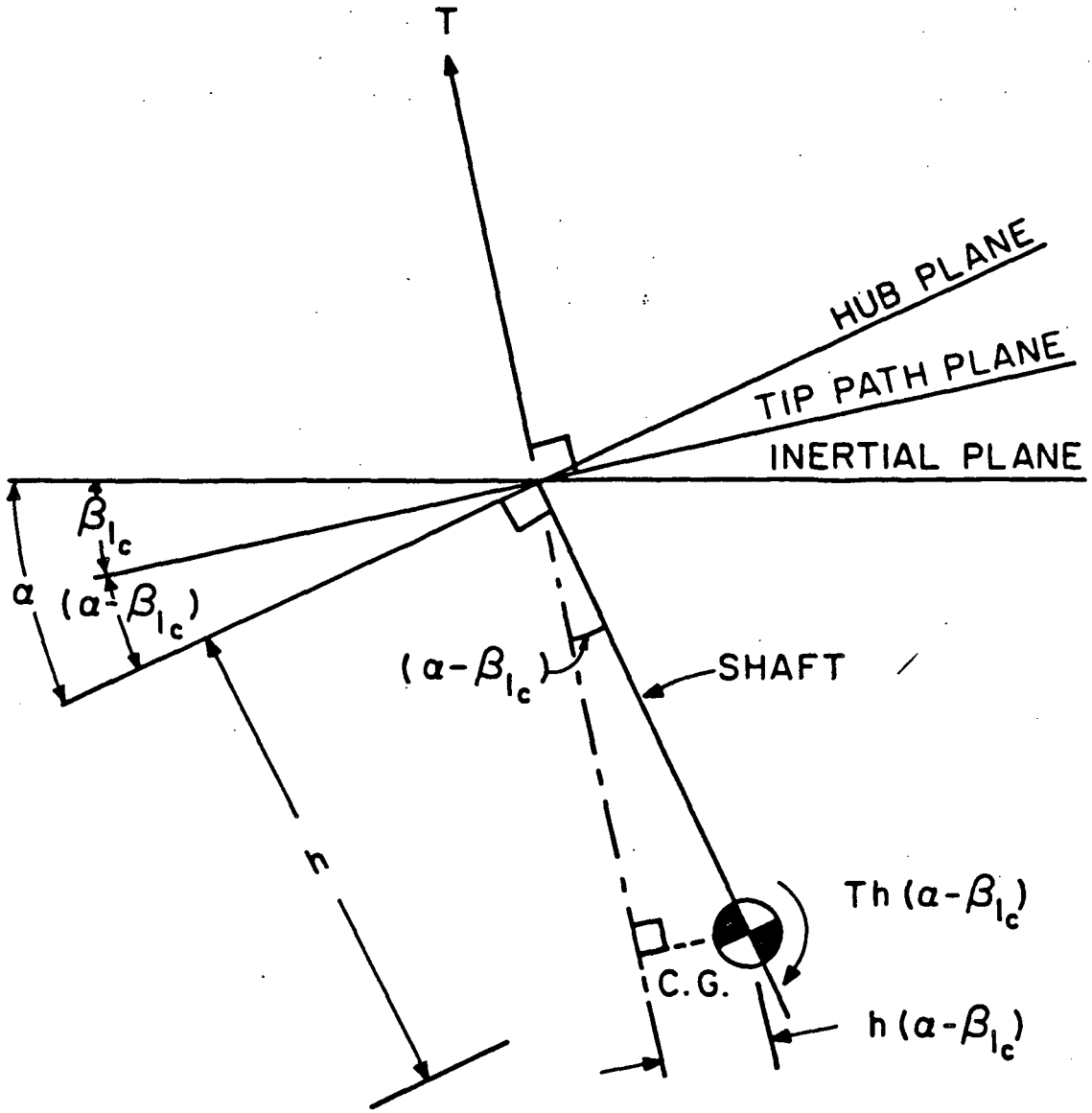

FIG. 4 Geometry for Longitudinal Stability Analysis

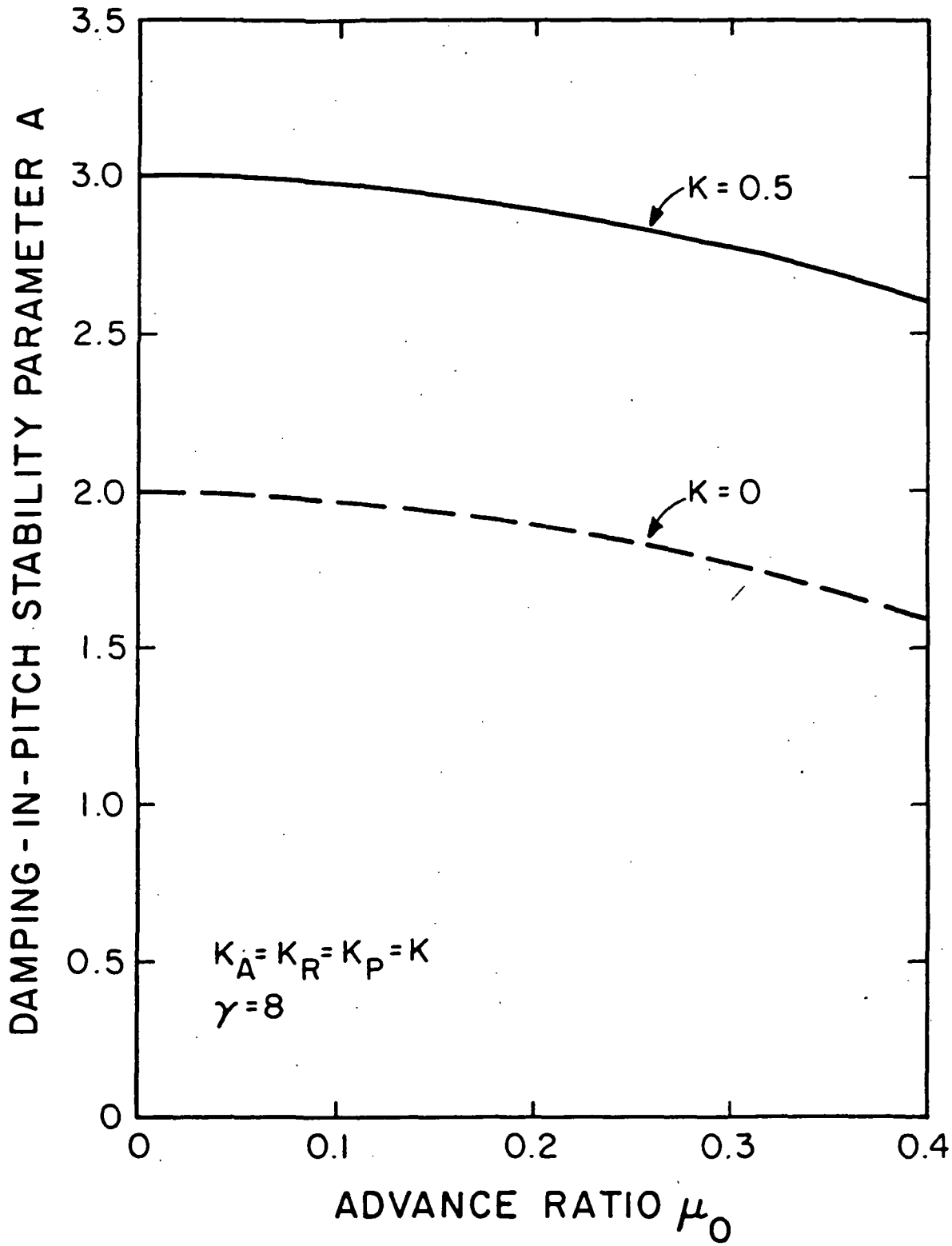

FIG. 5 Rotor Damping-in-Pitch Stability Parameter Versus Advance Ratio

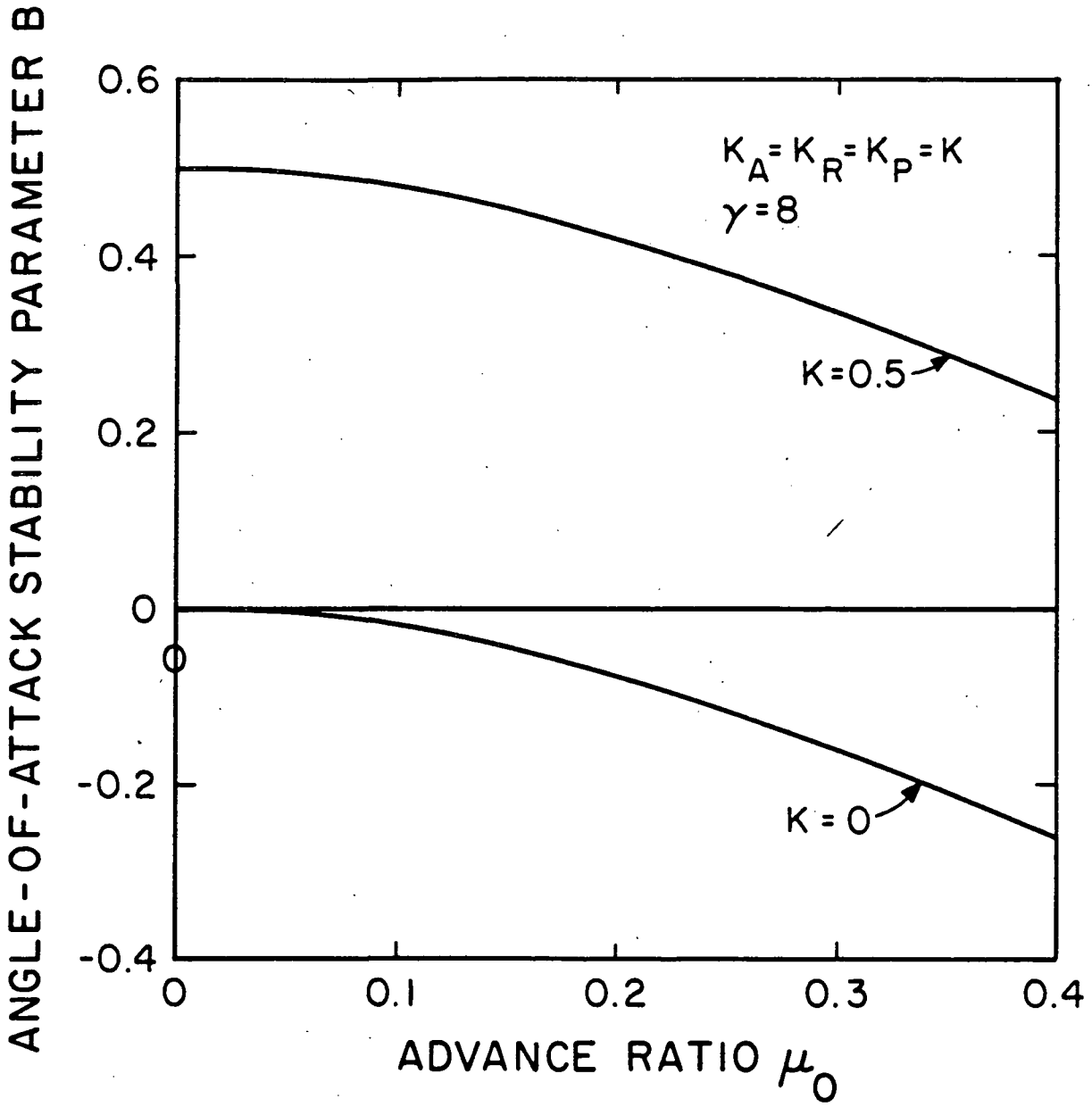

FIG. 6 Rotor Angle-of-Attack Stability Parameter Versus Advance Ratio

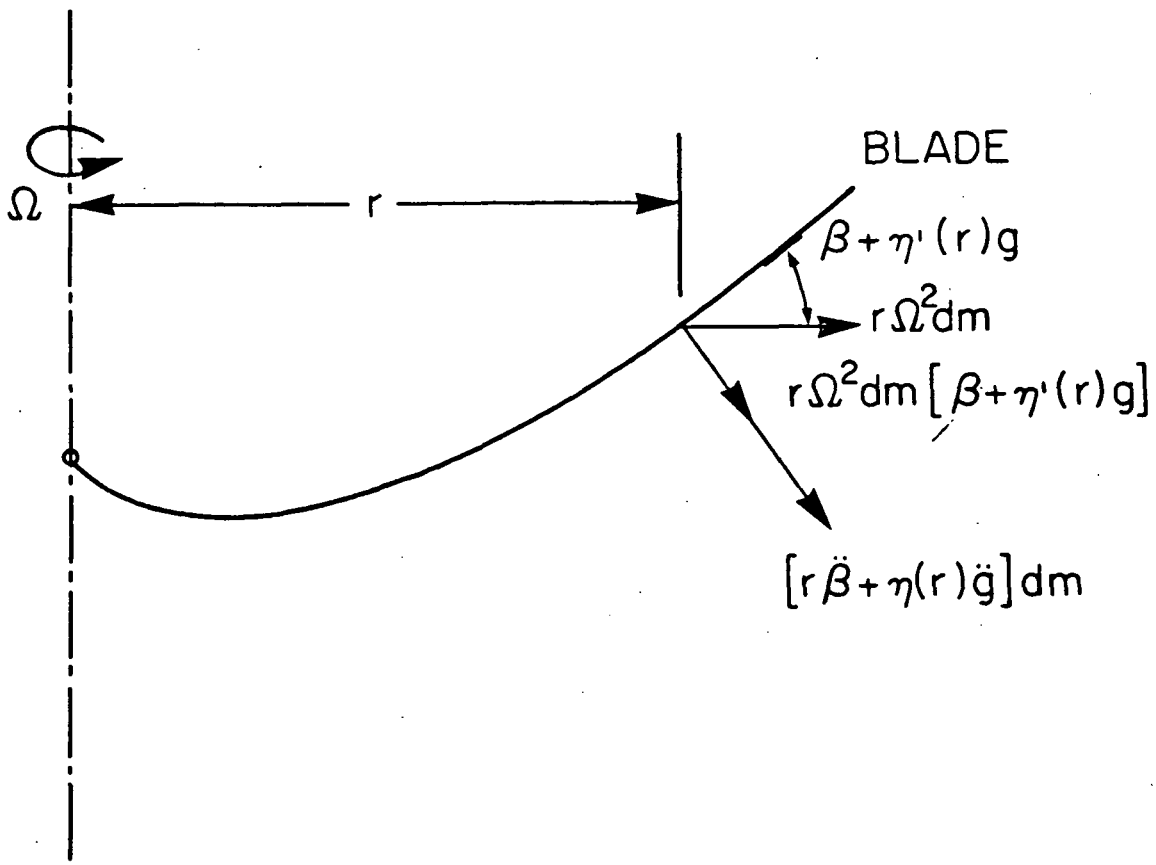

FIG. 7 Blade Flatwise Inertia Forces

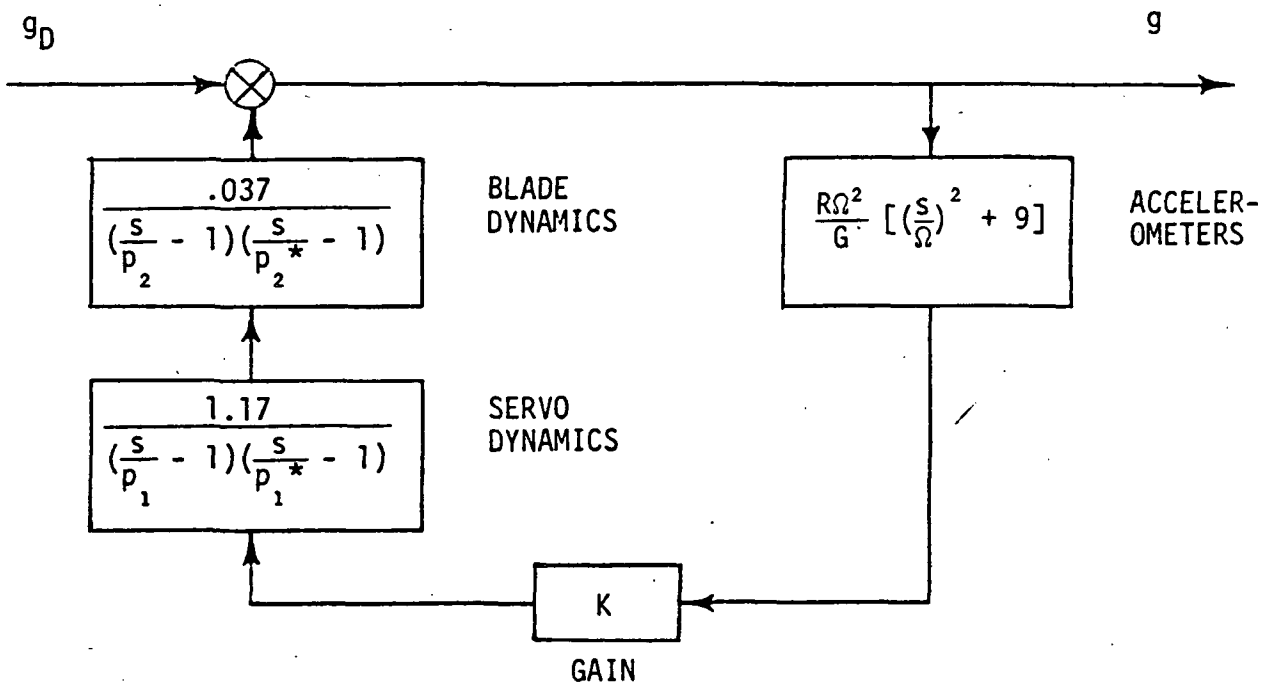

FIG. 8 Inner Loop Block Diagram Yielding H(s) (Vibration System)

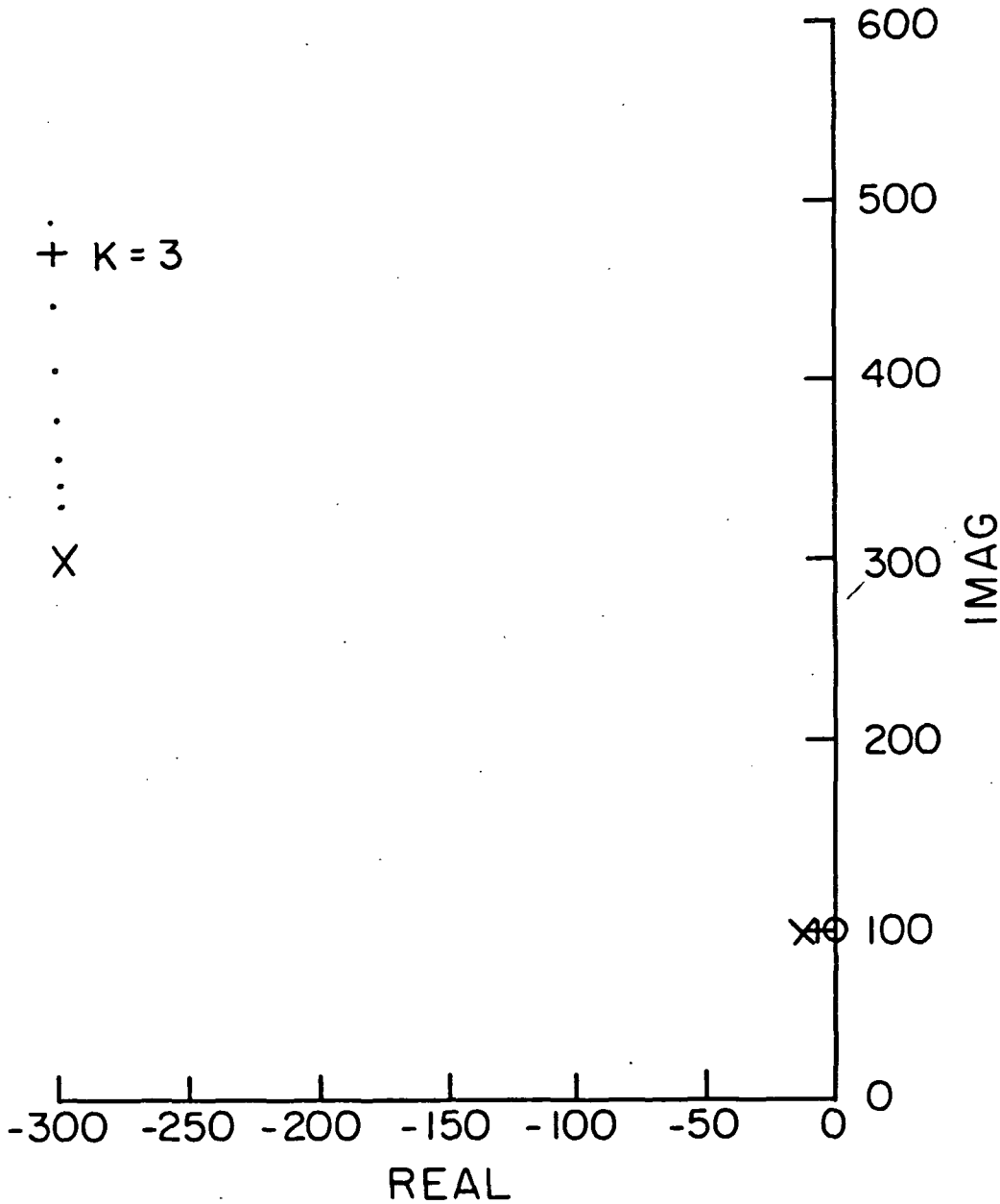

FIG. 9 Inner Loop Root Locus (Vibration System)

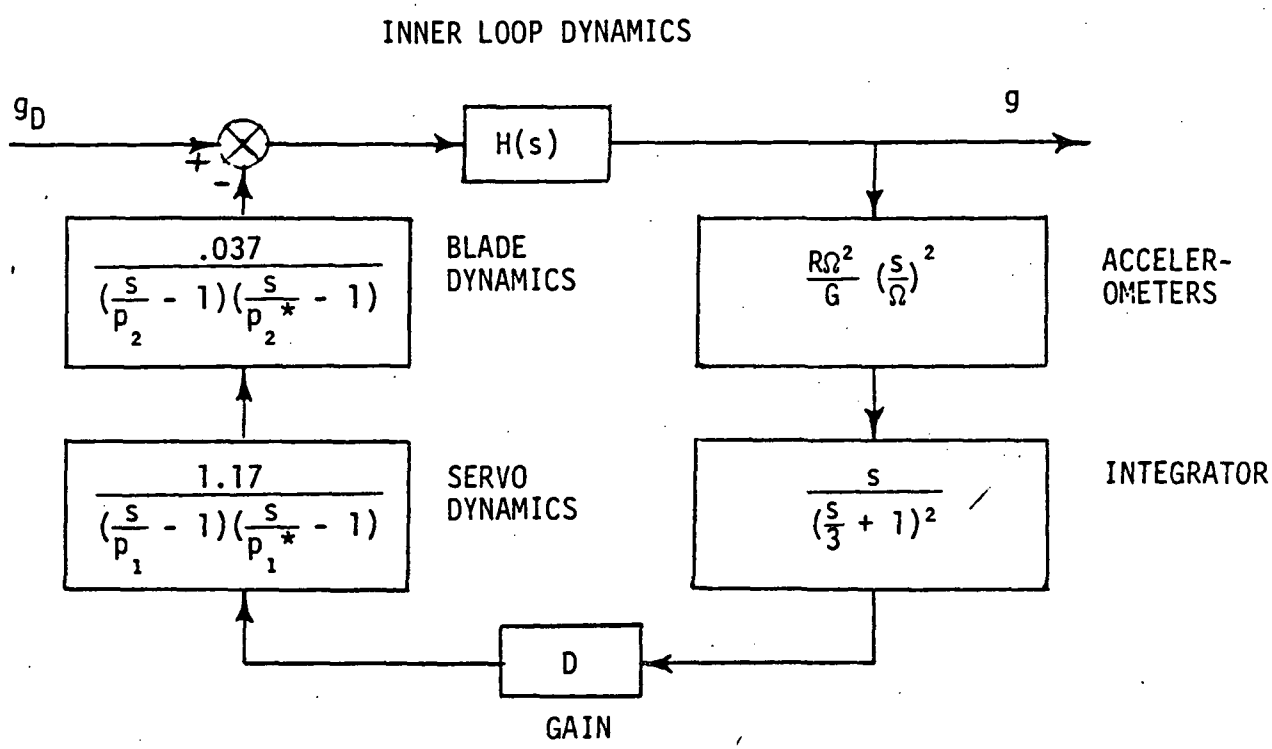

FIG. 10 Outer Loop Block Diagram (Vibration System)

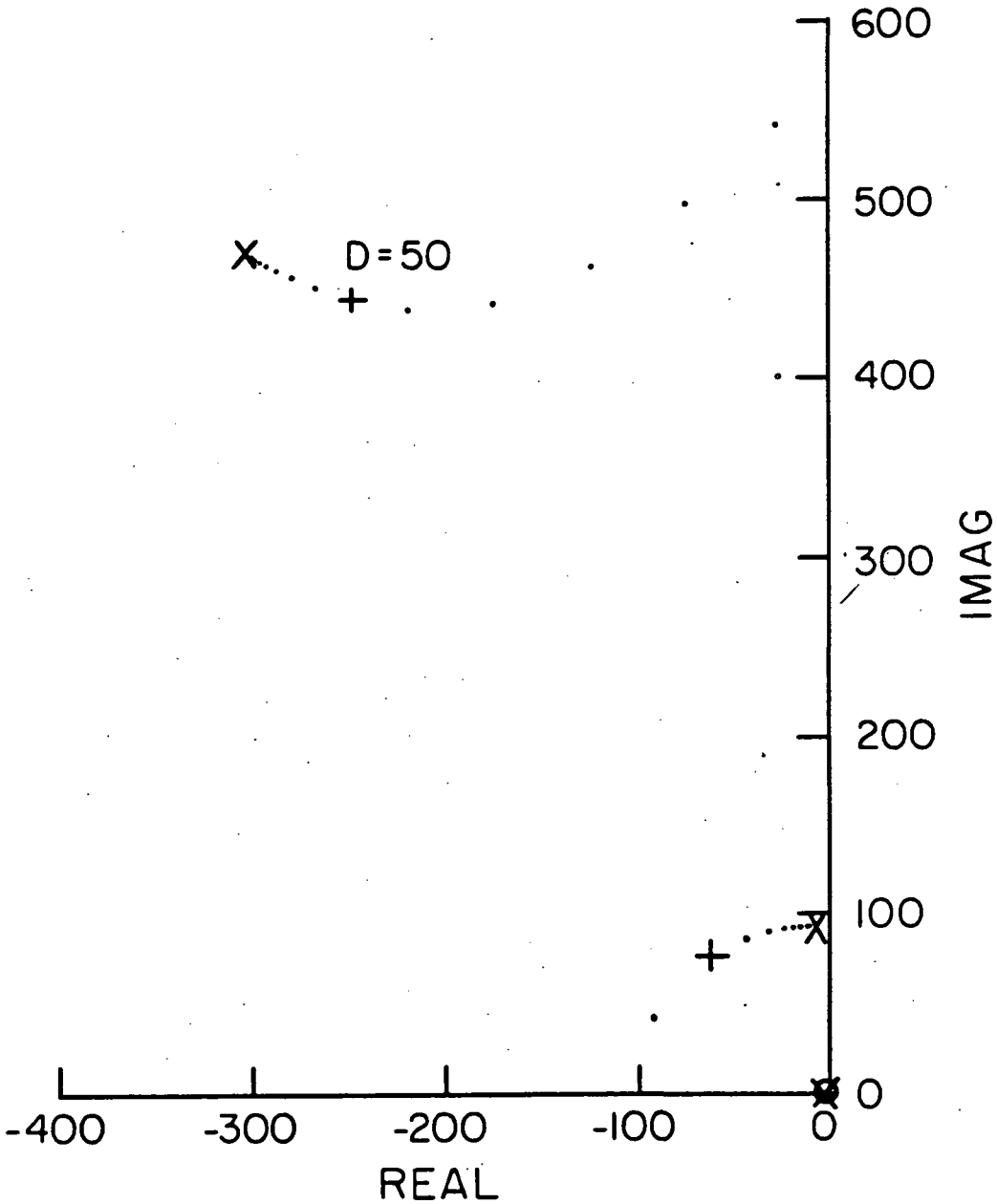

FIG. 11 Outer Loop Root Locus (Vibration System)

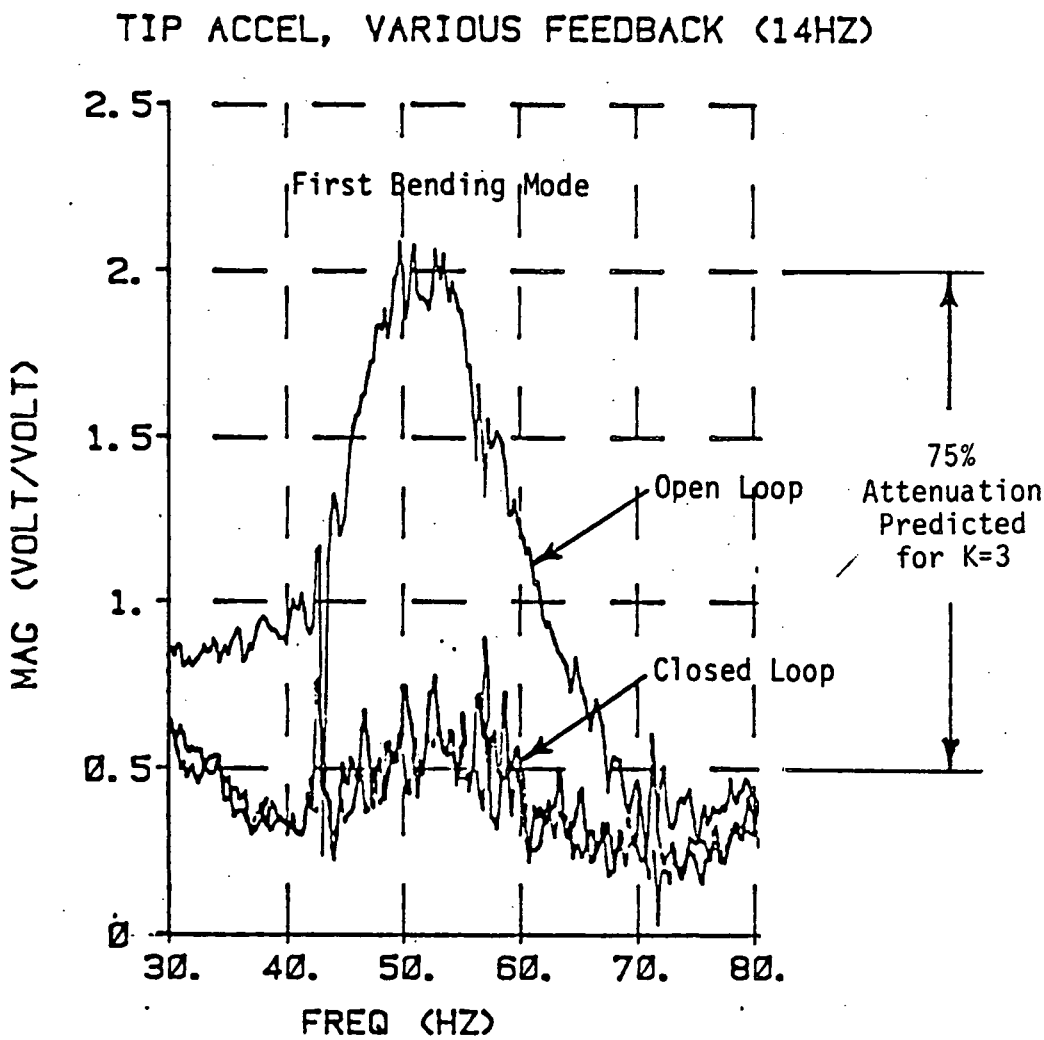

Fig. 12 Open and Closed Loop Tip Accelerometer Response to White Noise Pitch Input in Hover

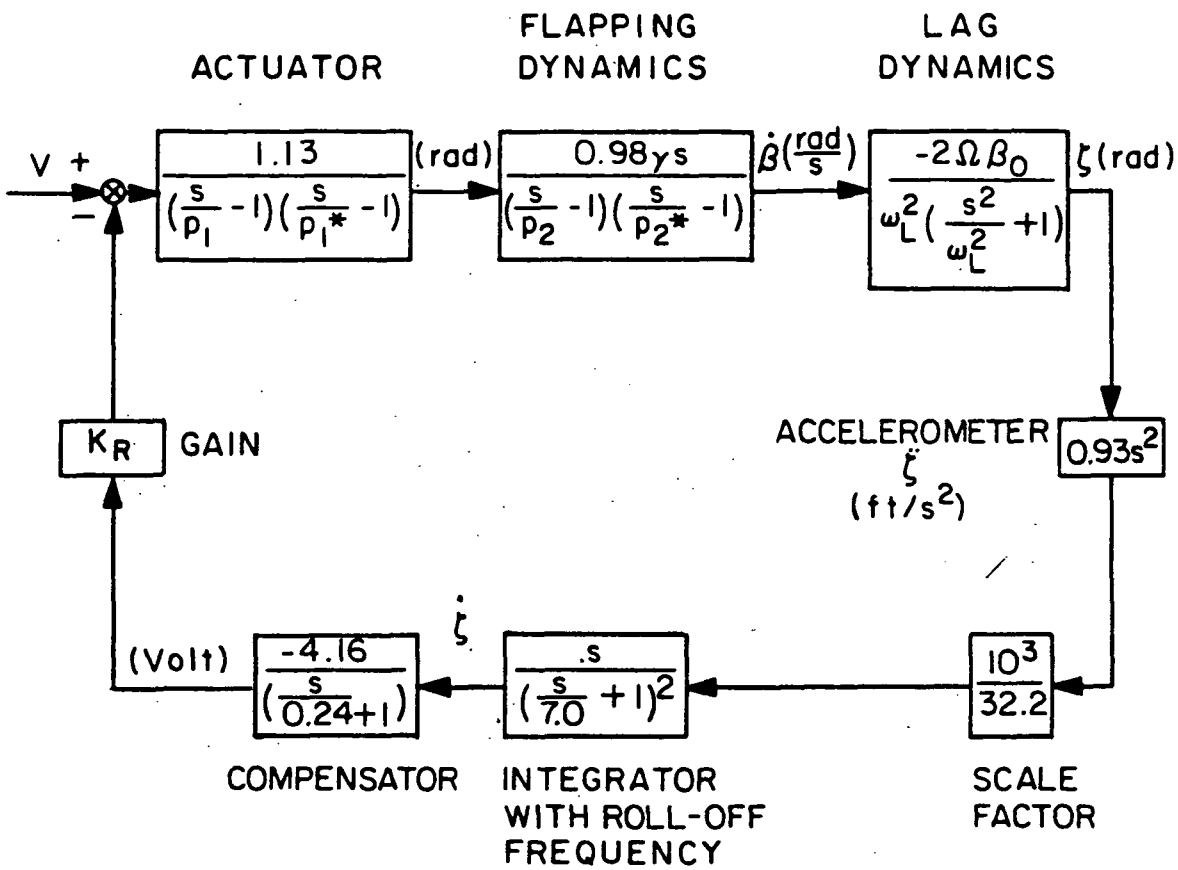

$P_1 = -300(1+j)$

$P_2 = -12.1 + 82.57j$

$\omega_L = 28.74$ rd/s

FIG. 13 Block Diagram of the System with Compensator

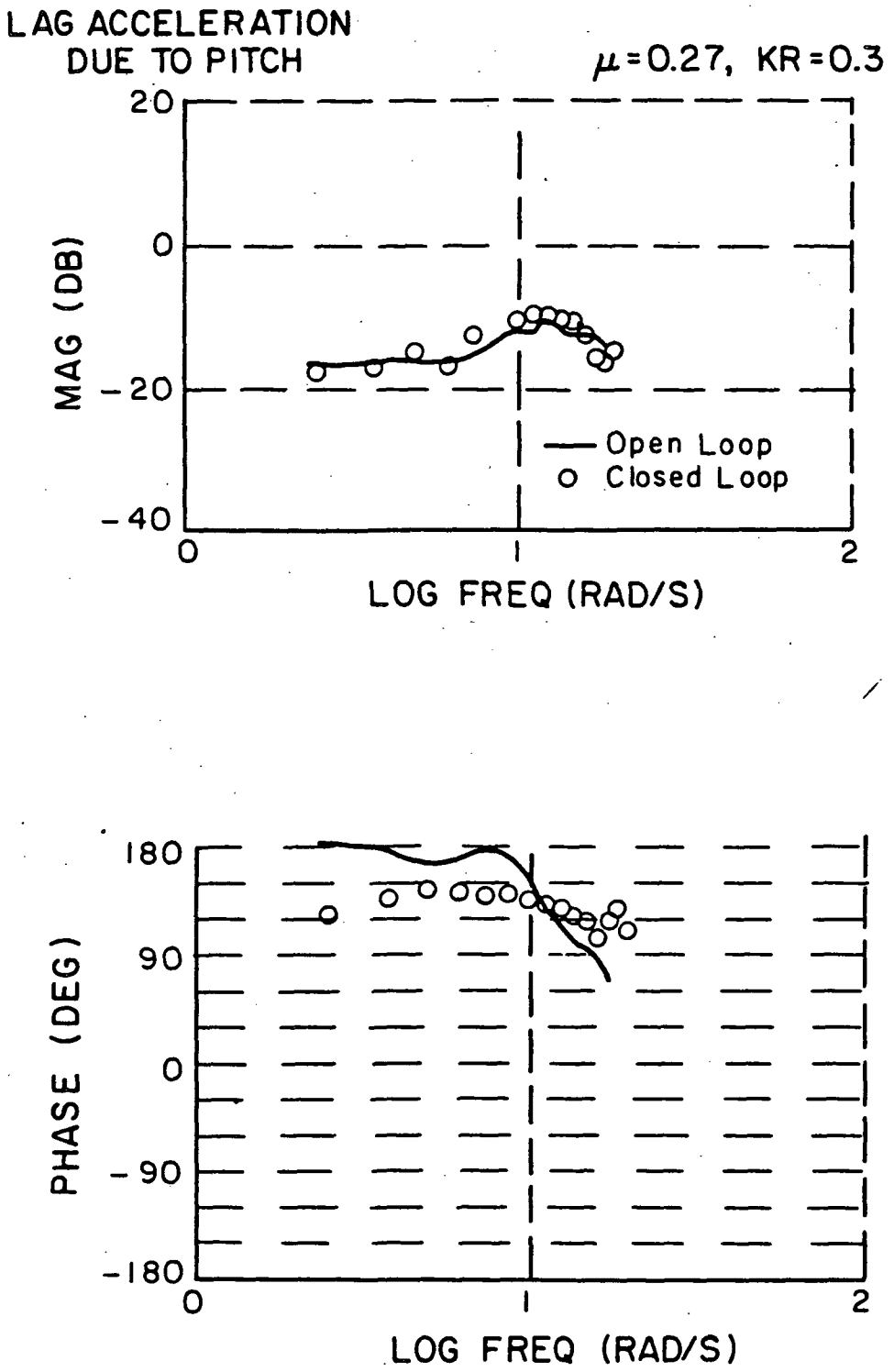

FIG. 14 Experimental Results, $\mu = 0.27$, $\Omega = 37.7$ rad/s. Pitch θ to Accelerometer Difference Signal $1/2\,(R-e)\,\ddot{\zeta}$

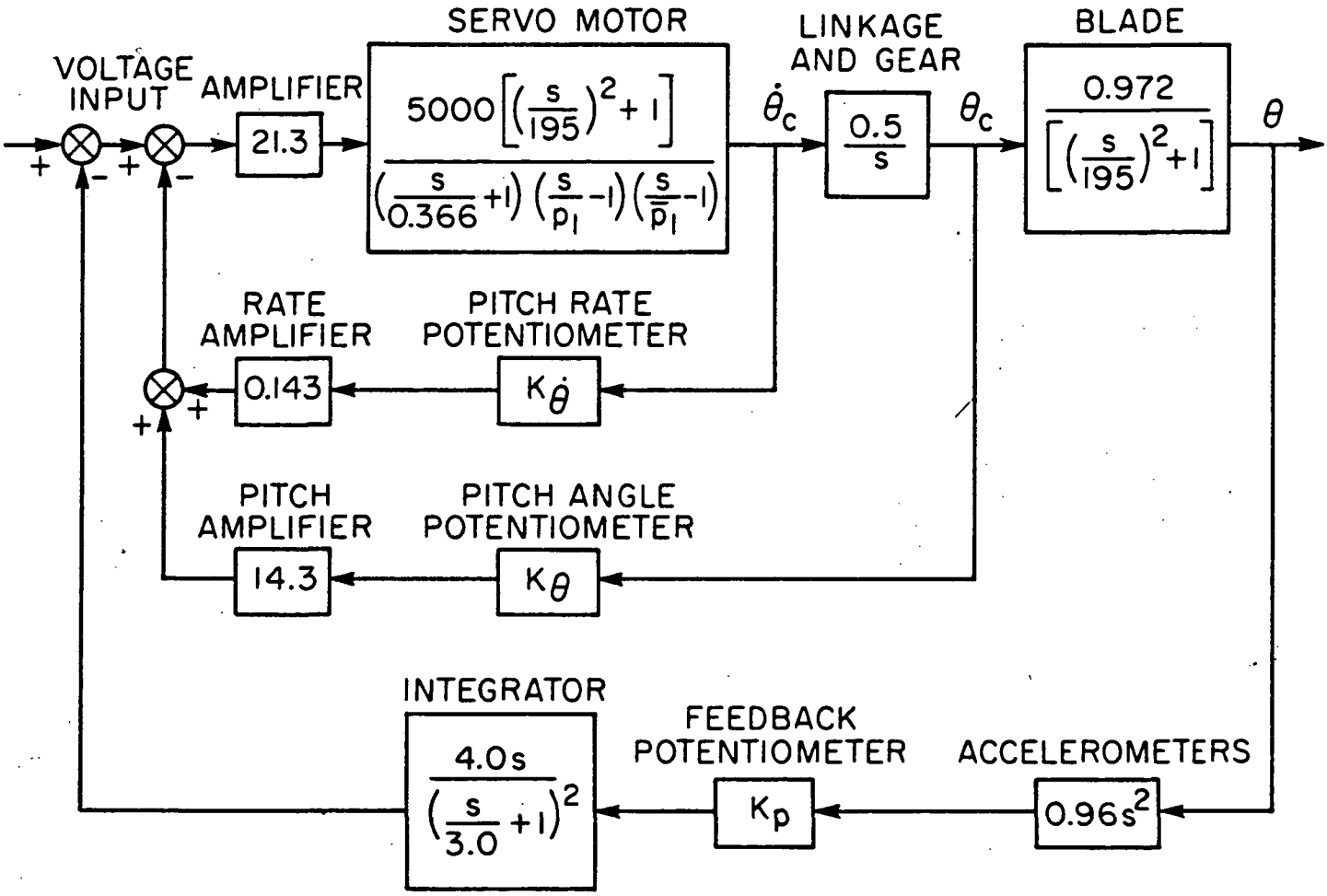

$p = -.057 + 220i$ FOR $\Omega = 0$

FIG. 15 Stall Flutter Suppression System Block Diagram

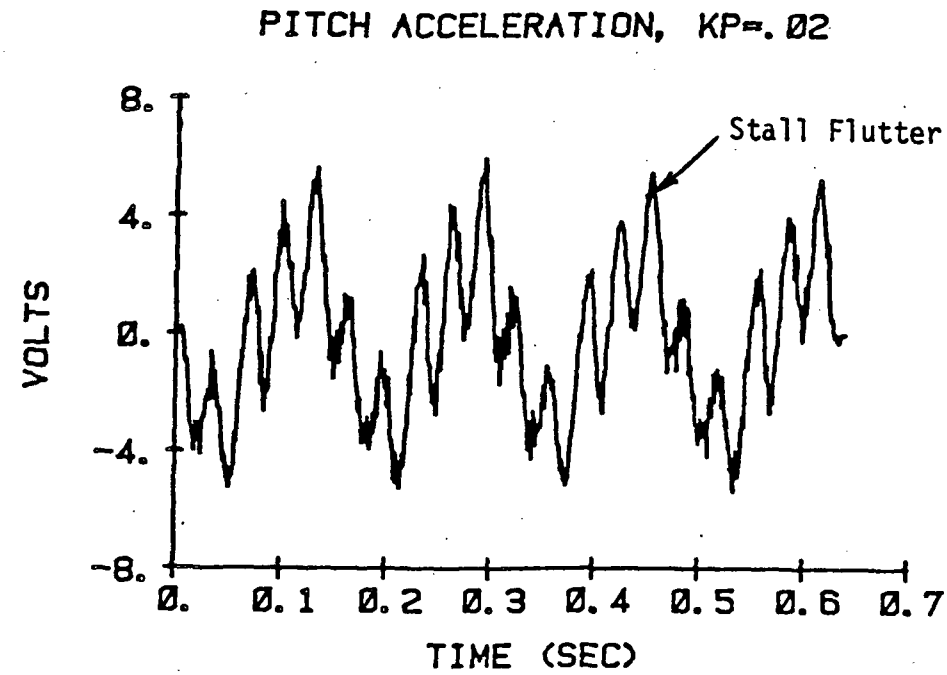

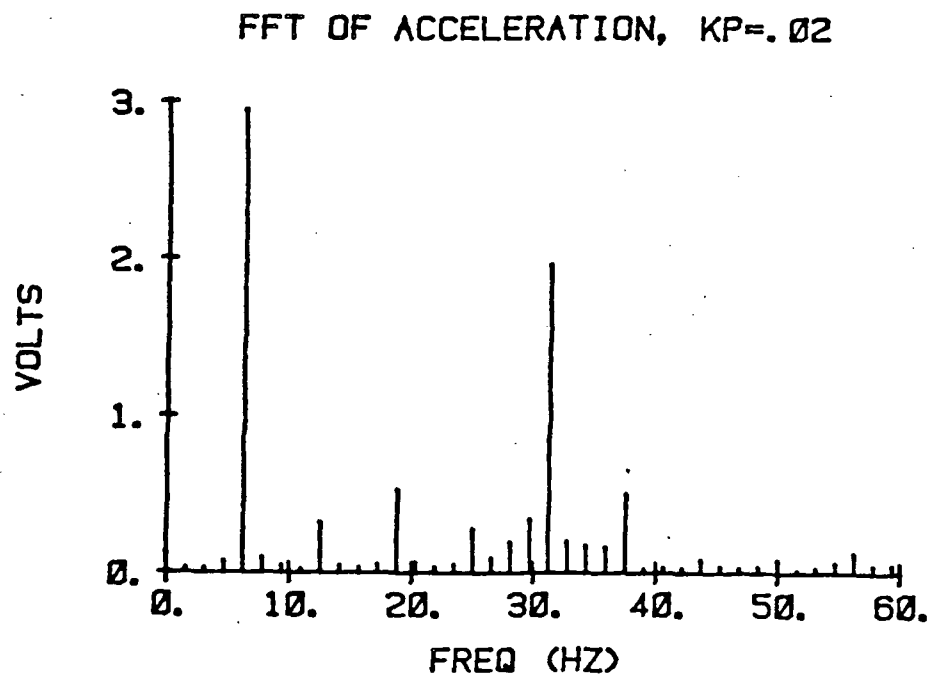

FIG. 16 Low Feedback Mechanical Spring Test, Ω = 6.1 Hz, μ = 0.33

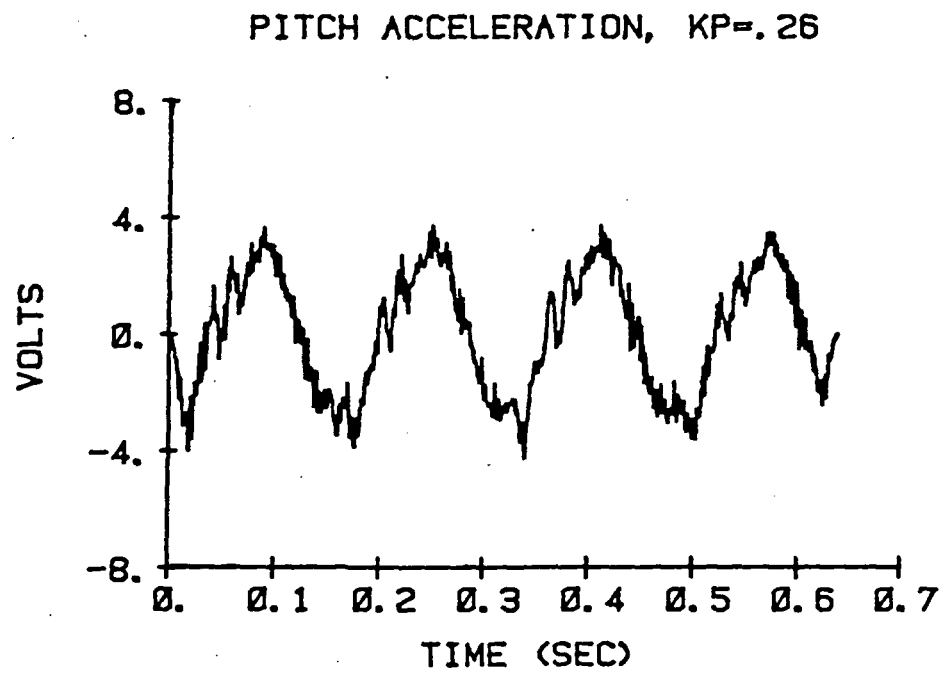

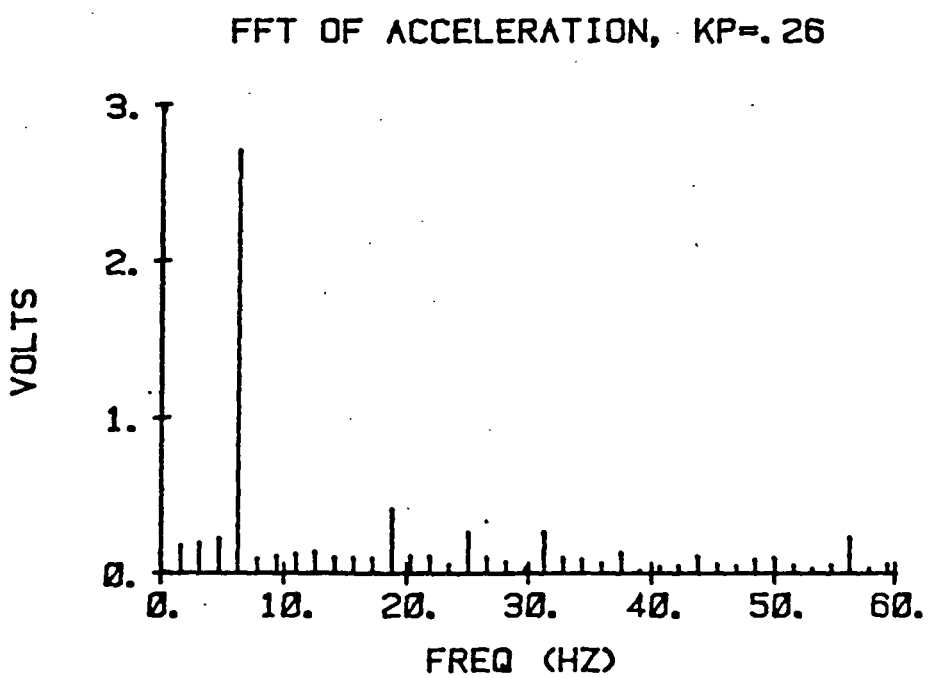

FIG. 17 High Feedback Mechanical Spring Test, Ω = 6.1 Hz, μ = 0.33

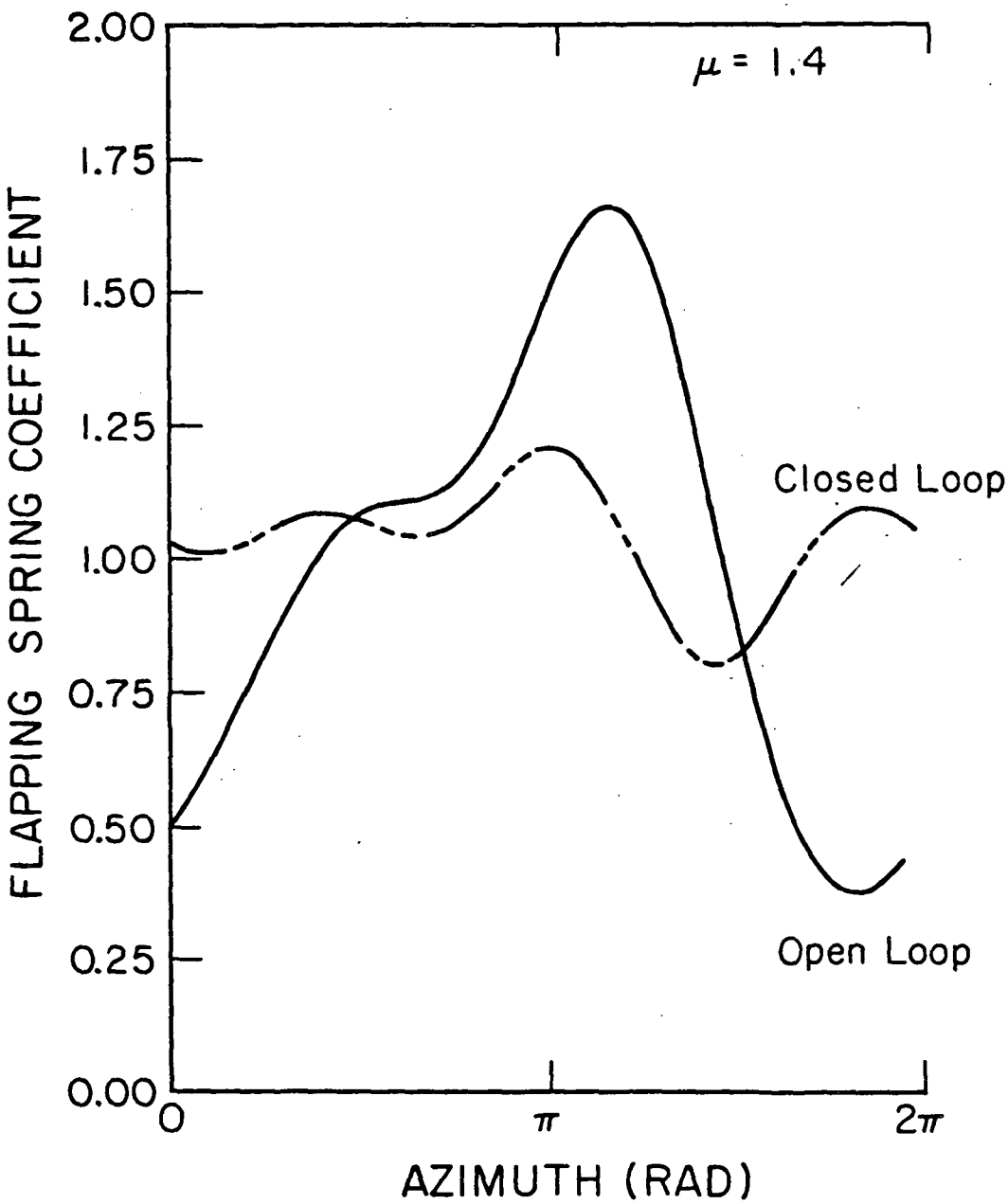

FIG. 18 Experimental Rotor Flapping Spring Coefficient (μ = 1.4)

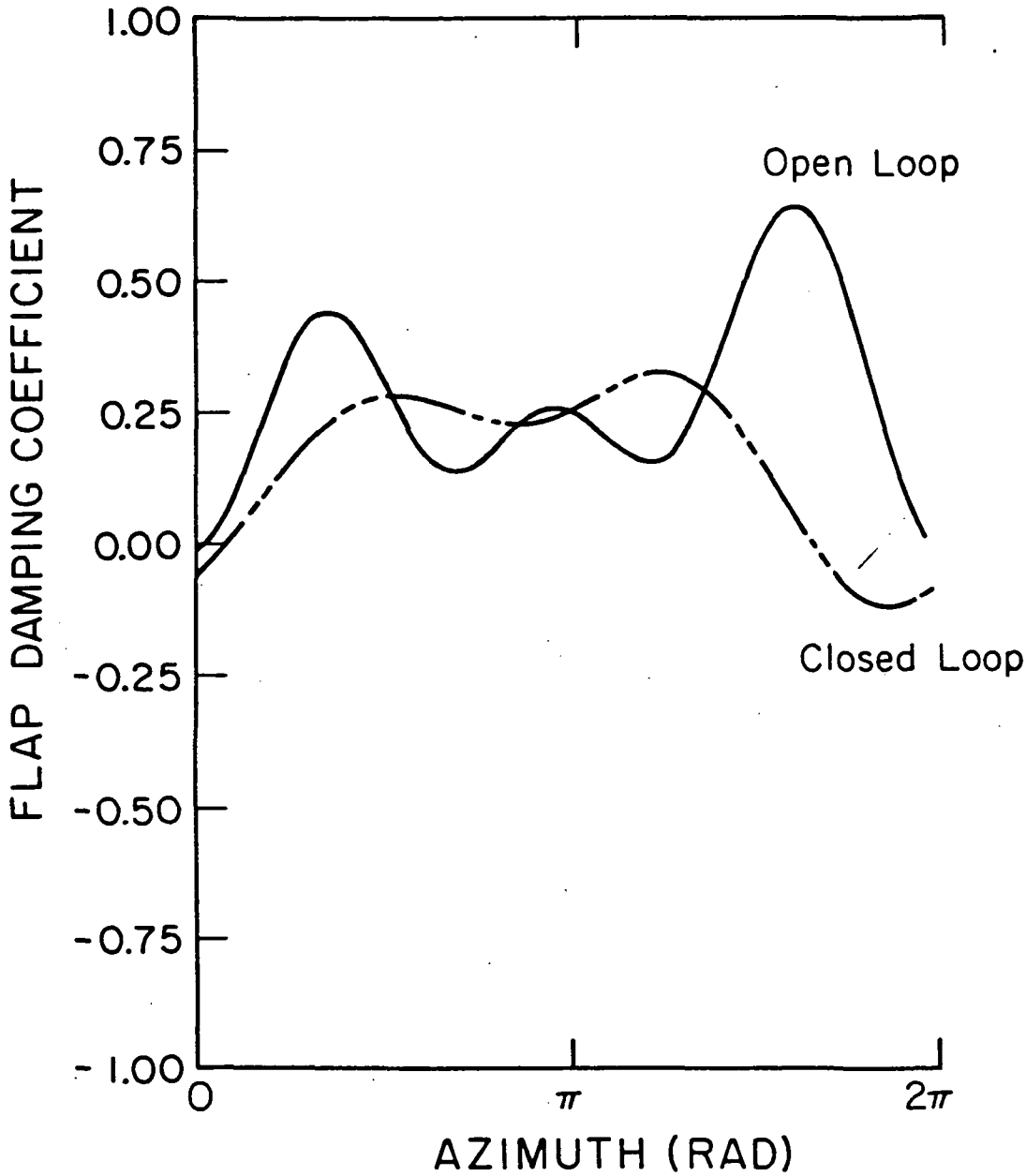

FIG. 19 Experimental Rotor Flap Damping Coefficient (μ = 1.4)

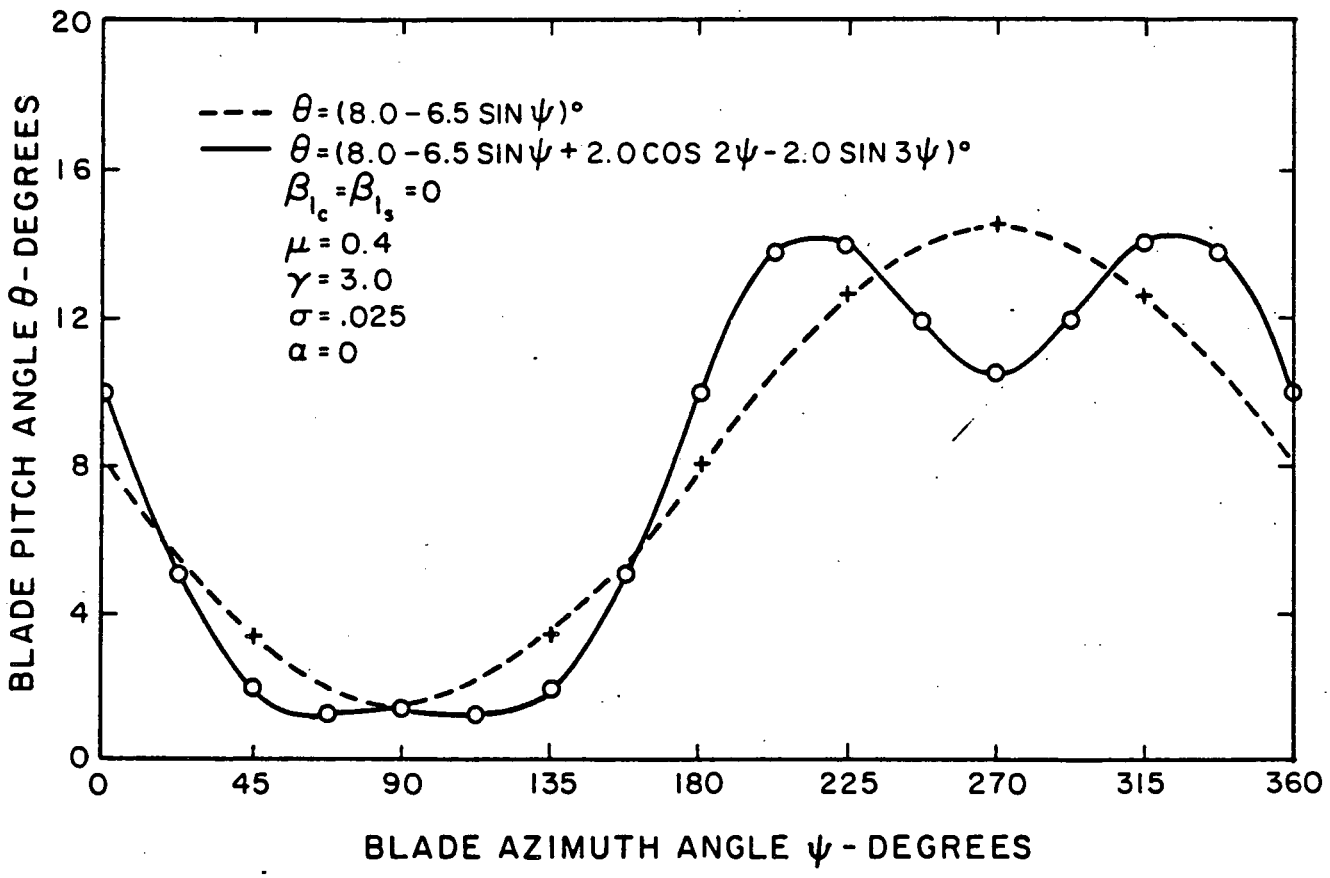

FIG. 20 Blade Pitch Angle Time History for Stall Alleviation