IN-22011

NASA Technical Memorandum 87277

Effect of Crystallographical and Geometrical Changes of a Ferrite Head on Magnetic Signals During the Sliding Process With Magnetic Tape

Kazuhisa Miyoshi and Donald H. Buckley
Lewis Research Center
Cleveland, Ohio

and

Kyuichiro Tanaka
Kanazawa University
Kanazawa, Japan

(NASA-TM-87277) EFFECT OF CRYSTALLOGRAPHICAL AND GEOMETRICAL CHANGES OF A FERRITE HEAD ON MAGNETIC SIGNALS DURING THE SLIDING PROCESS WITH MAGNETIC TAPE (NASA) 26 p CSCL 14E G3/27
N86-31728
Unclas
43098

Prepared for the
1986 Joint Tribology Conference
cosponsored by the American Society of Lubrication Engineers and
the American Society of Mechanical Engineers
Pittsburgh, Pennsylvania, October 19–22, 1986

NASA

EFFECT OF CRYSTALLOGRAPHICAL AND GEOMETRICAL CHANGES OF A FERRITE HEAD ON MAGNETIC SIGNALS DURING THE SLIDING PROCESS WITH MAGNETIC TAPE

Kazuhisa Miyoshi and Donald H. Buckley
National Aeronautics and Space Administration
Lewis Research Center
Cleveland, Ohio 44135

and

Kyuichiro Tanaka
Kanazawa University
Kanazawa, Japan

E-2955

SUMMARY

This paper reviews changes in the crystalline structure and geometry of lapped Mn-Zn ferrite heads in sliding contact with magnetic tape and the effects of these changes on magnetic signals. A highly textured, polycrystalline structure was produced on the surface of a single-crystal Mn-Zn ferrite head when it was finished with an aluminum oxide lapping tape. Sliding this lapped surface against a magnetic tape produced a nearly amorphous structure. The sliding process led to a degradation in readback signal of 1 to 2 dB (short-wavelength recording). Furthermore, wear of the magnetic head caused geometrical changes in the head surface. The signal read back with the worn magnetic head was sensitive to operating parameters such as head displacement and tape tension. A change in operating parameters created head-to-tape spacings and, consequently, excessive gains or losses in the readback signal.

INTRODUCTION

The present work continues an ongoing tribological study on how wear affects the structure-sensitive magnetic properties of Mn-Zn ferrite in contact with magnetic tape (1).

Extrinsic magnetic properties of ferrites such as initial permeability, coercive force, and magnetic loss are influenced by both the surface and bulk

crystalline states of the ferrite. Sliding a magnetic tape on a ferrite head abrades the ferrite and generates small scratches on the surface. Considerable plastic flow occurs on the ferrite surface, and the large number of defects produced can drastically change the crystalline state of the head and produce a deformed layer on the head surface. These deformed layers lead to a decrease in readback signal amplitude and a deterioration of the signal obtained in short-wavelength recording, as observed previously by the present authors and by Potgiesser and Koorneef (2)-(4).

Many investigators have studied the effects of surface finishing (such as those associated with polishing and grinding) on the structure-sensitive magnetic properties of ferrites. The observed effects include changes in magnetostriction and permeability due to surface distortion induced by grinding (5),(6), improvements in coercivity and permeability of a ground ferrite after annealing (7), an increase in the residual and hysteresis losses and a pronounced change in the permeability-temperature curve due to tensile and compressive stresses (8), a reduction in initial permeability by residual stresses in the damaged surficial layer induced by the polishing process (9),(10), and the formation of fine domains and zig-zag walls around a scratched groove on a ferrite by residual stresses induced during mechanical contact (11). The effects of machining on the extrinsic magnetic properties of ferrite are very similar to those of wear with a magnetic tape. The difference between them appears to be simply a matter of magnitude.

In addition to the formation of a deformed layer, wear causes geometrical changes in the head surface. The geometry of the worn head creates head-to-tape spacings and, consequently, excessive signal loss (2),(3), and (12).

This paper discusses the crystallographical and geometrical changes of a lapped magnetic head in sliding contact with a magnetic tape and the effects

of these changes on magnetic signals. All the wear experiments were conducted with single-crystal Mn-Zn ferrite magnetic heads sliding against a γ-Fe_2O_3 magnetic tape at a tape speed of 0.19 m/s and with a head rotating velocity of 11 m/s in room-temperature air at atmospheric pressure. Unless otherwise specified, the sliding surface of each magnetic head was finished with an abrasive impregnated tape, commonly called lapping tape. Lapping tapes are practically and widely used in the final finishing or cleaning of the sliding surface of magnetic heads for incontact recording applications.

MATERIALS

As-grown single-crystal Mn-Zn ferrite (69.8 wt % Fe_2O_3, 22.6 wt % MnO, and 7.6 wt % ZnO) is a ceramic semiconductor. In Mn-Zn ferrites the {110} planes in the <100> direction exhibit the greatest hardness (13). Therefore the magnetic head was oriented with its Mn-Zn ferrite {110} surface nearly parallel to the sliding interface and with its {100} surface perpendicular to the sliding direction (1). The orientation was determined with the back-reflection Laue method. The {100} and {110} surfaces were oriented to an accuracy of ±1°. The magnetic gap was 115 μm wide (the width of the recorded track) and 0.7 μm long (14).

The magnetic tape used in this investigation had a layered structure (1): a magnetic layer of γ-Fe_2O_3 powder, binder, and lubricant; and a polymer-base film (polyethylene terephthalate) backing. It was 23 μm thick and 12.7 mm wide.

The lapping tapes used in this investigation were aluminum oxide (2000-mesh Al_2O_3) powders coated on a polyester film backing (thickness, 23±1 μm; Young's modulus, 5.8×10^9 Pa; and width, 12.7 mm). The average grain size of the abrasive, 7.1 μm, was obtained by averaging the measurements

of 150 grains in scanning electron micrographs. The total lapping-tape thickness was 47 μm.

APPARATUS

The apparatus used in this investigation was a modified commercial two-head, helical-scan video tape recording system (Fig. 1). The two video heads were positioned exactly opposite each other on the drum. A measuring microscope and a tape-tension measuring device were mounted in the system. The measuring microscope was used to measure the head displacement from the drum surface and the head wear and to determine the surface profile of the head.

The 12.7-mm-wide magnetic tape, which was wound around the drum at a 190° wrap angle, traveled helically at 0.19 m/s at an angle of 2°50' on the drum surface. The head rotated at 11 m/s in the direction opposite to tape travel.

The tape tension, which was controlled by a tension arm, was used to vary the normal load applied to the head-tape contact. The normal load could also be controlled by displacing the head radially from the drum surface [Fig. 1(b)]. The applied load and friction force were proportional to the tape tension and the amount of head displacement below 150 μm. At displacements above 150 μm the tension increased at a slightly higher rate with further increases in head displacement. The final tape tension was three times greater than the initial tape tension (15).

EXPERIMENTAL PROCEDURE

Preparation of Sliding Surface

Lapped surface. - Some of the sliding surfaces of the Mn-Zn ferrite magnetic heads used in the experiments were first polished and cleaned by lapping tapes coated with aluminum oxide (2000 mesh) powders. In the polishing process the head rotated at 11 m/s in the direction opposite to

that in which the tape traveled at 0.19 m/s; the initial tape tension was 0.2 N; and the polishing time was 10 s. Each head thus slid on the lapping tape for approximately 100 m.

Chemically etched surface. - Some of the sliding surfaces of Mn-Zn ferrite magnetic heads used in the experiments were first run against magnetic tapes with a predetermined head displacement and with an initial tape tension of 0.2 N for a sliding distance of 40 km. The end-view contour and the deformed layer of the head surface reached an equilibrium condition for a given head displacement. The sliding surface of the magnetic head was then etched to a depth of approximately 0.1 μm in order to remove the residual, deformed surficial layer from the wear surface. The contours of the sliding surface were not changed during etching.

Preworn surface. - Some of the sliding surfaces of Mn-Zn ferrite magnetic heads used in the experiments were first run against magnetic tapes with a predetermined head displacement and with an initial tape tension of either 0.2 or 0.61 N for a sliding distance of 40 or 1190 km. The end-view contour reached an equilibrium condition for a given head displacement at an initial tape tension of 0.2 N. The sliding surface of the head had a deformed layer, as discussed in reference (1).

Wear Experiments

Wear experiments were conducted with magnetic tapes in sliding contact with magnetic heads prepared by one of the methods described in the section Preparation of Sliding Surface. In the experiments both the head and the tape were in motion; that is, the head rotated at 11 m/s in the direction opposite to that in which the tape traveled at 0.19 m/s. All experiments were conducted in room-temperature laboratory air, at a relative humidity of 50±10 percent.

Surface Contour and Wear Measurement

An optical interference microscope was used to examine the end-view contour (A-A in Fig. 2) of the sliding surface of the magnetic head (1). The contours were measured from interference fringes on the photomicrographs. The side-view contour (B-B in Fig. 2) and the wear measurement of the magnetic head were determined as follows: An optical microscope was used to examine the side of the magnetic head and to photograph it (at a magnification of 600) before and after the sliding-friction experiments (1). Small scratches or dents on the side of the magnetic head were used as standard markers. Lines, which were parallel to the front end, the rear end, or the magnetic gap of the head and which extended through the standard markers, were drawn on the photomicrographs. The distances between the standard markers and the sliding surface of the magnetic head (X_1, X_2, ..., X_n) were then measured (Fig. 2). The amount of wear reported herein was obtained by averaging the distances X_1 to X_n from seven or eight measurements.

Signal-Output Level

The effect of wear on the electrical characteristics of the magnetic head-tape contacts used in the recording system was examined as follows: First, a sine wave with a non-frequency-modulated 3-MHz signal was supplied at a recording current of 60 mA and was recorded on the magnetic tape via the magnetic head. (Such a tape is called a newly recorded tape.) The signal was then read back via the magnetic head. The readback signal was amplified 8 and 500 times through a built-in rotary transformer and a preamplifier, respectively. The readback signals were monitored by an oscilloscope at a sweep speed of 2 ms/cm and a sensitivity of 0.02 V/cm during the sliding friction experiments. Readback signal levels (in decibels) during sliding were defined by $D = 20 \log (G_n/G_1)$, where G_1 is the standard readback signal (in volts) and G_n is an arbitrary signal (in volts).

In the wear experiments, which were conducted to examine the effects of magnetic-head wear on magnetic signals, a newly recorded tape (11 m long) was first run and the standard signal G_1 was read back. An unrecorded tape (230 m long) was repeatedly run over a desired head sliding distance. During the sliding process the 11-m-long recorded tape, which was used to read back signals G_n at various stages of the experiment, was replaced several times.

Electron Diffraction and Depth Profiling

The sliding surfaces of the magnetic heads were depth profiled to examine the crystalline states as a function of depth. The etching was done with hydrochloric acid at 50±1 °C for a predetermined etching time. The surfaces were examined by reflection electron diffraction in a transmission electron microscope. The acceleration voltage was 75 or 100 kV. The depth in terms of the etching time was obtained by using an optical interference microscope.

RESULTS AND DISCUSSION

Crystalline State of Lapped Surface

Sliding a lapping tape on a Mn-Zn ferrite magnetic head generated abrasion and developed a deformed layer on the ferrite surface. Figure 3 presents reflection diffraction patterns obtained from the abraded surface and the etched surfaces. The arcs in the electron diffraction pattern of the abraded surface are partial Debye-Scherrer rings that contain enlarged, streaked spots [Fig. 3(a)]. They indicate that a highly textured, surficial layer formed on the single-crystal magnetic head during the sliding of the lapping tape.

The surface etched to a depth of 0.3 μm from the abraded surface shows an enlarged streak-spot pattern [Fig. 3(b)]. The streaking indicates a great amount of plastic deformation: that is, a highly strained single-crystal structure. A large number of line defects can cause streaking in a single-crystal diffraction pattern.

The surface etched to a depth of 0.6 μm shows Kikuchi lines (pairs of black and white parallel lines), which are an indication of the bulk single-crystal structure of a ferrite head containing no extrinsic mechanical stress [Fig. 3(c)]. Thus the total thickness of the deformed layers on the Mn-Zn ferrite head presented in Fig. 3 was less than 0.6 μm.

When lapping tape was again slid against the etched surface typified by Fig. 3(c), the polishing process reintroduced local surface stresses and redeveloped a deformed layer on the ferrite similar to that on the surface presented in Fig. 3(a).

Effect of Crystal Structure on Magnetic Signals

To determine how wear of the lapped magnetic head affects its crystalline state and magnetic signals, we ran the head against magnetic tapes (recorded and unrecorded) at an initial tape tension of 0.2 N and three head displacements for a sliding distance of 40 km. The results are presented in Fig. 4(a). The readback signal amplitude (sensitivity) decreased rapidly during the initial 20 km of tape sliding distance. It remained constant or decreased slightly over the next 20 km.

Typical electron diffraction patterns taken from the lapped surfaces of the magnetic head before the sliding experiment and from the wear surfaces after 40 km of sliding are presented in Fig. 4(b) and (c). These diffraction patterns show that sliding action changed the highly textured, polycrystalline structure of the lapped head to a nearly amorphous structure. When a lapping tape was then slid against the wear surface of the lapped magnetic head, the nearly amorphous structure was removed and a highly textured, polycrystalline structure was reformed in the magnetic-head surficial layer. The lapping also restored the readback signal amplitude to the initial standard level G_1. In other words, lapping the wear surface of the magnetic head restored extrinsic magnetic properties.

The change of the crystalline state of the magnetic head surface and the tape wear were the primary factors controlling the signal losses presented in Fig. 4. The signal loss due to tape wear, which has been previously discussed, (1)-(3), was less than 1 dB. The signal loss due to the crystallographical change of the magnetic-head surficial layer from a textured, polycrystalline structure to a nearly amorphous structure was 1 to 2 dB (Fig. 4).

Figure 5 presents the readback signals from a chemically etched magnetic head in sliding contact with a magnetic tape as a function of sliding distance (1)-(3) as well as typical electron diffraction patterns taken from the etched surfaces of the magnetic head before the sliding experiment and from the wear surfaces after 60 km of sliding. Clearly the sliding action changed the crystalline state of the magnetic-head surficial layer from a single-crystal structure to a nearly amorphous structure. That crystallographic change was a critical factor in readback signal loss above 2.5 dB (1)-(3).

Effect of Geometry on Magnetic Signals

Since the magnetic tape was thin and flexible, both the end- and side-view contours of the magnetic-head wear surface changed during sliding (1)-(3). The geometry of the wear surface was strongly affected by head displacement and tape tension.

End-view contour. - The end-view contour of the magnetic-head wear surface reached an equilibrium shape for a given head displacement and tape tension after some period of sliding against a magnetic tape. Generally the end-view contour of the head wear surface at equilibrium had a larger radius of curvature when less head displacement and/or less tape tension was provided, and vice versa. In other words the radius of curvature of the wear surface increased with decreasing head displacement and/or tape tension.

To determine the end-view-contour geometrical changes of a magnetic head with a preworn surface and the effect of those changes on magnetic signals, we ran the preworn head against magnetic tapes with new head displacements and an initial tape tension of 0.2 N for an additional sliding distance of 40 km. The initial end-view contours were known. Note that the deformed layer of the preworn surface was the same as that of the wear surface after the sliding experiment. The resulting geometrical changes of the wear surfaces and the resulting readback signals are presented in Figs. 6 and 7, respectively.

Figure 6 shows end-view contours of the magnetic heads before and after sliding on magnetic tapes for 40 km. In each wear experiment the radius of curvature of the sliding surface increased during sliding because the head displacement was always set lower than it was in the prewear treatment.

Figure 7 presents the readback signal amplitude as a function of sliding distance. In experiment A the readback signal amplitude increased rapidly as the sliding distance increased to approximately 6 km. It remained high and constant after 6 km. In experiments B and C the amplitude increased with increasing sliding distance to 15 km; after that, it remained constant. In experiment D the amplitude remained constant.

The change in the end-view contour at the magnetic gap and the tape wear were the primary factors controlling the readback signal amplitude shown in Fig. 7. The signal loss due to tape wear was much less than 1 dB. On the other hand, the gross signal gain due to the change in the end-view contour of the magnetic head was quite large, for example, 3 dB in experiment A. Thus, the net signal gain in experiment A is approximately 2 dB.

The signal gain due to the magnetic-head geometrical changes presented in Fig. 7 can be explained by Figs. 8 and 9. When a preworn surface of a magnetic head was placed in contact with a tape at a different head displacement from that used in the prewear treatment, the tape did not conform

to the sliding surface of the magnetic head. The tape head tended to form an end-view profile based on a given head displacement and tape tension. It is anticipated that the end-view profile of a tape contacting a magnetic head will be very similar to the end-view contour of the wear surface of the magnetic head. The radius of curvature of the tape profile was larger than that of the preworn head.

At the beginning of the sliding process the actual contact takes place over a very small area, literally at the tip of the magnetic head, as indicated in Fig. 8. Spacing is therefore introduced between the tape and the head. During sliding, ferrite is first removed from the initial contact area of the magnetic head, and then the contact area widens rapidly with increasing sliding distance. The widening of the contact area reduces the spacing between the magnetic head and the tape. Finally the contact takes place over the entire sliding surface of the head. The profile of the tape is the same as the head contour at this stage.

Therefore the end-view contours of the head before and after the wear experiment were compared to give a rough estimate of the spacing at the beginning of the experiment (Fig. 8). The two contours were matched at their tips; the distances between the contours (S_1, S_2, ..., S_n) were measured; and the average spacing was obtained by averaging the distances S_1 to S_n (Fig. 8). The average spacing generally increased as the difference between the head displacements used for the prewear treatment and wear experiment was increased.

Figure 9 presents the maximum signal gain indicated in Fig. 7 as a function of the spacing estimated from the end-view contours shown in Fig. 6. The signal gain is almost linearly proportional to the estimated spacing. The relation between the signal gain during sliding and the estimated spacing at the beginning of sliding correlates well with the theoretical spacing loss

factor. The spacing loss factor is given by $e^{-2\pi d/\lambda}$: that is, 54.6 d/λ (dB), where d is head-to-tape spacing and λ is the recorded wavelength (16).

Side-view contour. - The side-view contour of the lapped magnetic head surface generally possessed symmetry about the magnetic gap, as typified in Fig. 10(a). In wear experiments at a tape tension of 0.6 N and with the sliding distance extended to 1190 km, much more ferrite was removed from the front sliding surface of the head than from the rear because greater contact pressure was applied to the front than to the rear. The side-view contours of the wear surfaces subsequently reflected the pressure distribution on the sliding surface in contact with the magnetic tape. They were asymmetrical in shape, as indicated in Figs. 10(b) and (c).

To determine the effect of the asymmetrical side-view contour of the wear surface on the magnetic signal, we ran the preworn surfaces of the magnetic heads presented in Figs. 10(b) and (c) against recorded tapes with various tape tensions but with the same amount of head displacement as for the preworn heads. The results are presented in Fig. 11.

No signal loss was observed when the signal was read back with a tape tension of approximately 0.6 N, the same tape tension used in the prewear treatment. The readback signal amplitude decreased when the signal was read back with a tape tension lower than 0.6 N, as indicated in Fig. 11. The lower the tape tension, the greater the signal loss. Thus a magnetic head with an asymmetrical side-view contour (due to wear), has a readback signal that is very sensitive to operating conditions such as tape tension.

CONCLUSIONS

The following conclusions were drawn from wear experiments and electron diffraction studies of single-crystal Mn-Zn ferrite magnetic heads in contact with magnetic tapes:

(1) A highly textured, polycrystalline structure is produced on the single-crystal Mn-Zn ferrite head finished by a lapping tape with 2000-mesh aluminum oxide powder. The surface changes to a nearly amorphous structure after sliding against a magnetic tape. The process of sliding the lapped magnetic head with a magnetic tape leads to a decrease in readback signal of 1 to 2 dB.

(2) The wear of the magnetic head causes geometrical changes in the head surface. The signal output read back with the worn magnetic head is very sensitive to such operating parameters as head displacement and tape tension. A change in operating parameters may create head-to-tape spacings with consequent excessive gains or losses in readback signal.

REFERENCES

1. Miyoshi, K., Buckley, D.H., and Tanaka, K., "Effect of Wear on Structure-Sensitive Magnetic Properties of Ceramic Ferrite in Contact with Magnetic Tape," Tribology and Mechanics of Magnetic Storage Systems, Vol. II, ASLE SP-19, B. Bhushan and N.S. Eiss, Jr., eds., ASLE, Park Ridge, IL, 1985, pp. 112-118.
2. Miyoshi, K., Tanaka, K., and Murayama, T., "Friction and Wear of Video-Head in Sliding Contact with Magnetic Tape" (3rd report, Effect of Wear on Magnetic Signals). JSME-JSPE (The Japan Society of Mechanical Engineers - The Japan Society of Precision Engineering) Joint meeting in Kanazawa, Japan. Preprint No. 727-2, July 1972, pp. 65-68 (in Japanese).
3. Tanaka, K., Miyoshi, K., and Murayama, T., "Friction and Wear in the Sliding of VTR Head Against Magnetic Tape (3rd Report) - Effect of Wear on the Output Signal Level," Journal of the Japan Society of Precision Engineering, Vol. 40, No. 9, Sept. 1974, pp. 785-791 (in Japanese).
4. Potgiesser, J.A.L., and Koorneef, J., "Mechanical Wear and Degeneration of the Magnetic Properties of Magnetic Heads Caused by the Tape," Radio and Electronic Engineer, Vol. 44, No. 6, June 1974, pp. 313-318.
5. Stern, E. and Temme, D., "Magnetostriction Effects in Remanence Phase Shifters," IEEE Transactions on Microwave Theory and Technique, Vol. MTT-13, No. 6, Nov. 1965, pp. 873-874.
6. Knowles, J.E., "The Effect of Surface Grinding upon the Permeability of Manganese-Zinc Ferrites," Journal of Physics, D: Applied Physics, 1970, Vol. 3, No. 9, Sept. 1970, pp. 1346-1351.
7. Kehr, W.D., Meldrum, C.B., and Thornley, R.F.M., "The Influence of Grain Size on the Wear of Nickel-Zinc Ferrite by Flexible Media," Wear, Vol. 31, 1975, pp. 109-117.

8. Snelling, E.C., "The Effects of Stress on Some Properties of Mn-Zn Ferrite," IEEE Transactions on Magnetics, Vol. MAG-10, No. 3, Sept. 1974, pp. 616-618.

9. Yonezawa, T., Yokoyama, K., and Ito, N., "Residual Stress of Mn-Zn Ferrite Polished Surface and Effect on Magnetic Properties," National Technical Report, Vol. 25, No. 1, Feb. 1979, pp. 6-17 (in Japanese).

10. Sugaya, H., "Mechatronics and the Development of the Video Tape Recorder," Tribology and Mechanics of Magnetic Storage Systems, Vol. II, ASLE SP-19, B. Bhushan and N.S. Eiss, Jr., eds., ASLE, Park Ridge, IL, 1985, pp. 64-71.

11. Kinoshita, M., Murayama, T., Shimizu, R., and Ikuta, T., "Magnetic Domain Observation of Induced Anisotropy Around Scratches in Mn-Zn Ferrite Using SEM," Applied Physics Letters, Vol. 28, No. 3, Feb. 1, 1976, pp. 164-165.

12. Hahn, F.W., Jr., "Materials Selection For Digital Recording Heads," Wear of Materials, 1977, W.A. Glaeser, K.C. Ludema, and S.K. Rhee, eds., ASME, New York, 1977, pp. 199-203.

13. Miyoshi, K., "Lapping of Manganese-Zinc Ferrite by Abrasive Tape," Lubrication Engineer, Vol. 38, No. 3, Mar. 1982, pp. 165-172.

14. Murayama, T., Yamamoto, Y., and Someya, M., "The Optimum Gap Structure of VTR Magnetic Head," Bulletin of the Japan Society of Precision Engineering, Vol. 5, No. 4, Dec. 1971, pp. 113-114.

15. Tanaka, K., Miyoshi, K., Araki, H., and Murayama, T., "Friction and Wear in the Sliding of VTR Head Against Magnetic Tape (1st Report) - Contact Force and Frictional Force," Journal of the Japan Society of Precision Engineering, Vol. 40, No. 7, 1974, pp. 550-556 (In Japanese).

16. Katz, H.W., ed., "Magnetic Recording," Solid State Magnetic and Dielectric Devices, John Wiley & Sons, New York, 1959, pp. 404-456.

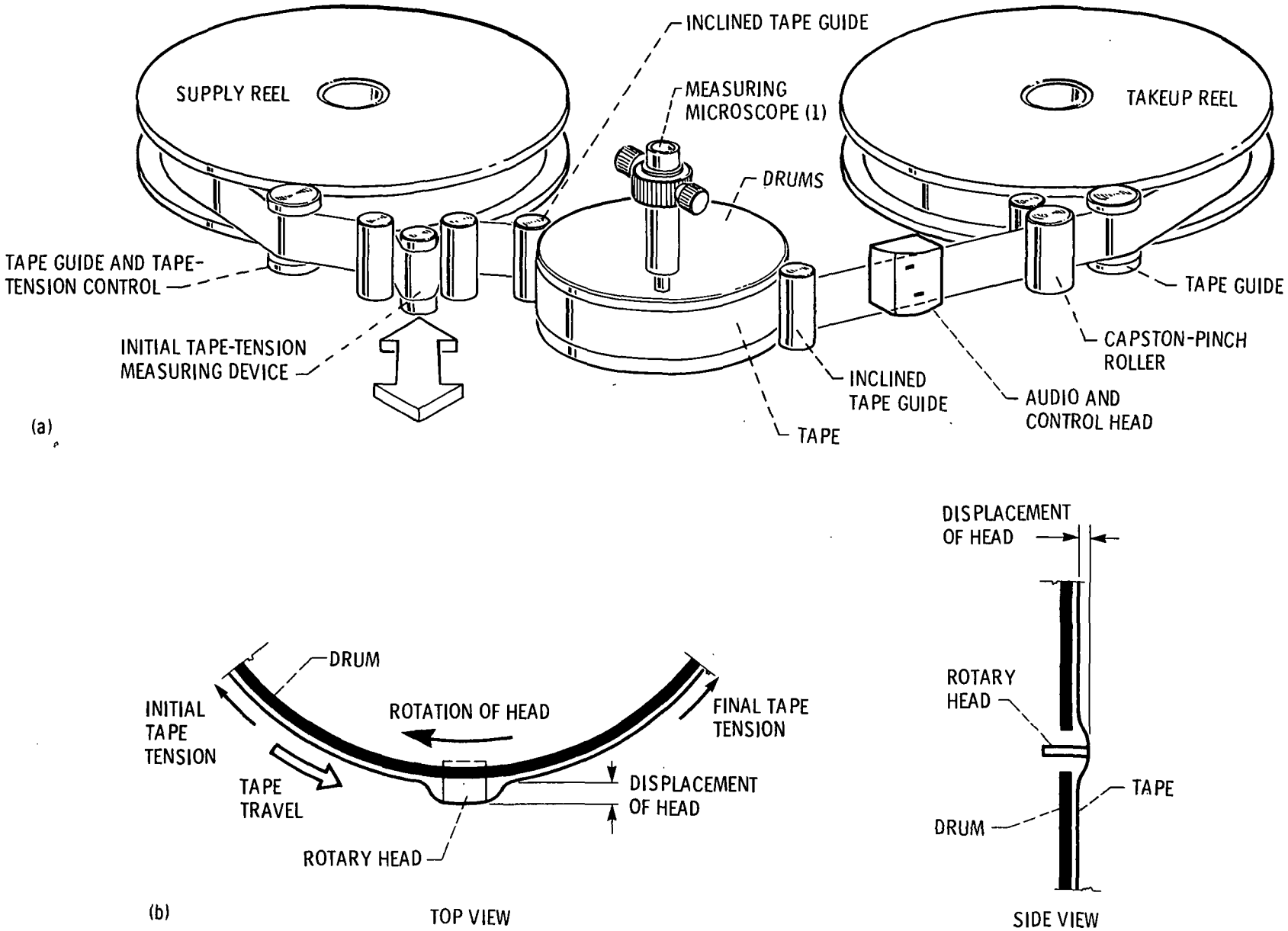

(a) Helical-scan recorder (configuration of recording and playback processes).

(b) Configuration of head-to-tape contact.

Fig. 1. - Friction and wear apparatus.

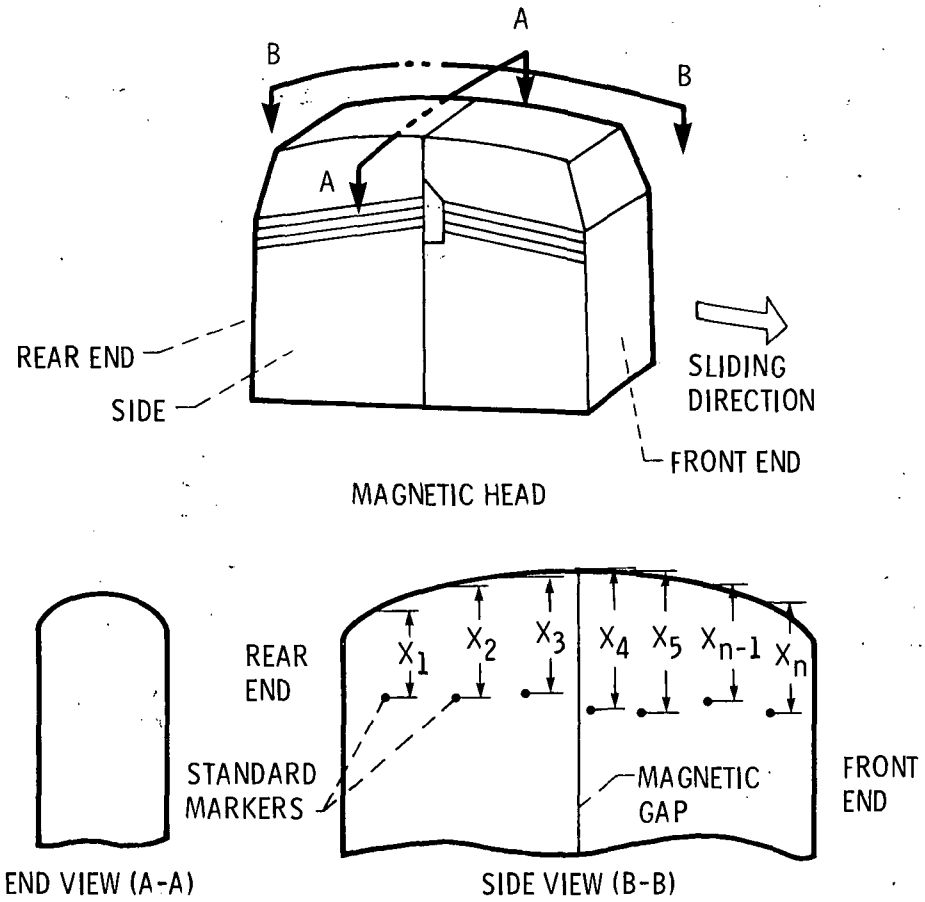

Fig. 2. - Schematics of end and side views of magnetic head.

ORIGINAL PAGE IS
OF POOR QUALITY

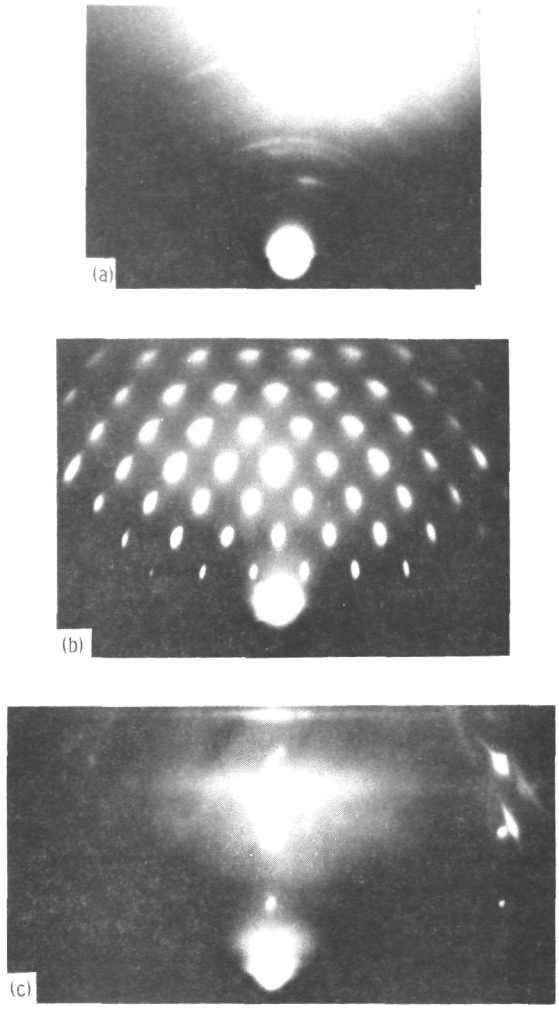

(a) Polished surface.

(b) Etched surface; etching depth, 0.3 μm.

(c) Etched surface; etching depth, 0.6 μm.

Fig. 3. - Diffraction patterns of polished and etched surfaces of magnetic head in sliding contact with lapping tape (2000-mesh aluminum oxide powder). Head displacement, 117 μm; tape tension, 0.2 N.

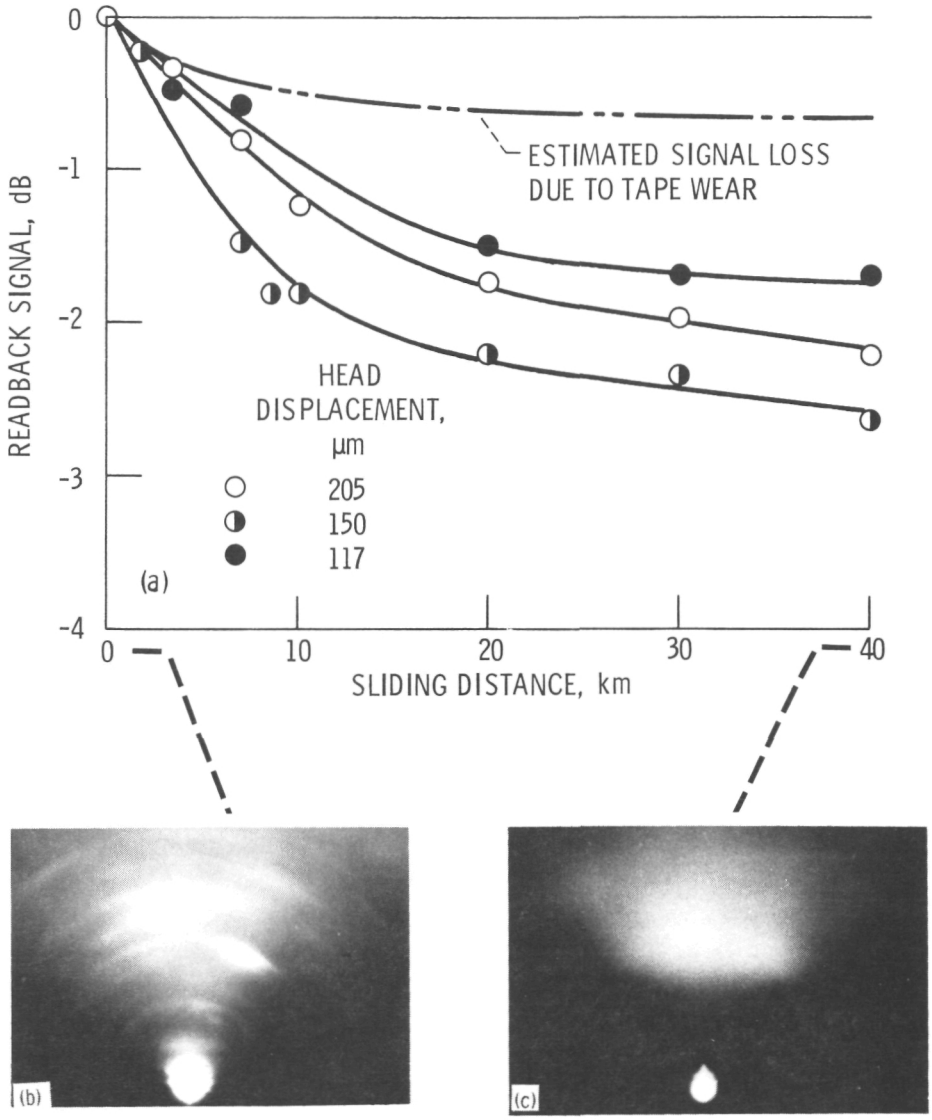

(a) Magnetic signals.

(b) Highly textured, polycrystalline structure of lapped surface. Sliding distance, 0 km.

(c) Nearly amorphous structure of wear surface. Sliding distance, 40 km.

Fig. 4. - Change in crystalline structure of lapped Mn-Zn ferrite head in relation to sliding distance against magnetic tape and effect of change on signals.

ORIGINAL PAGE IS
OF POOR QUALITY

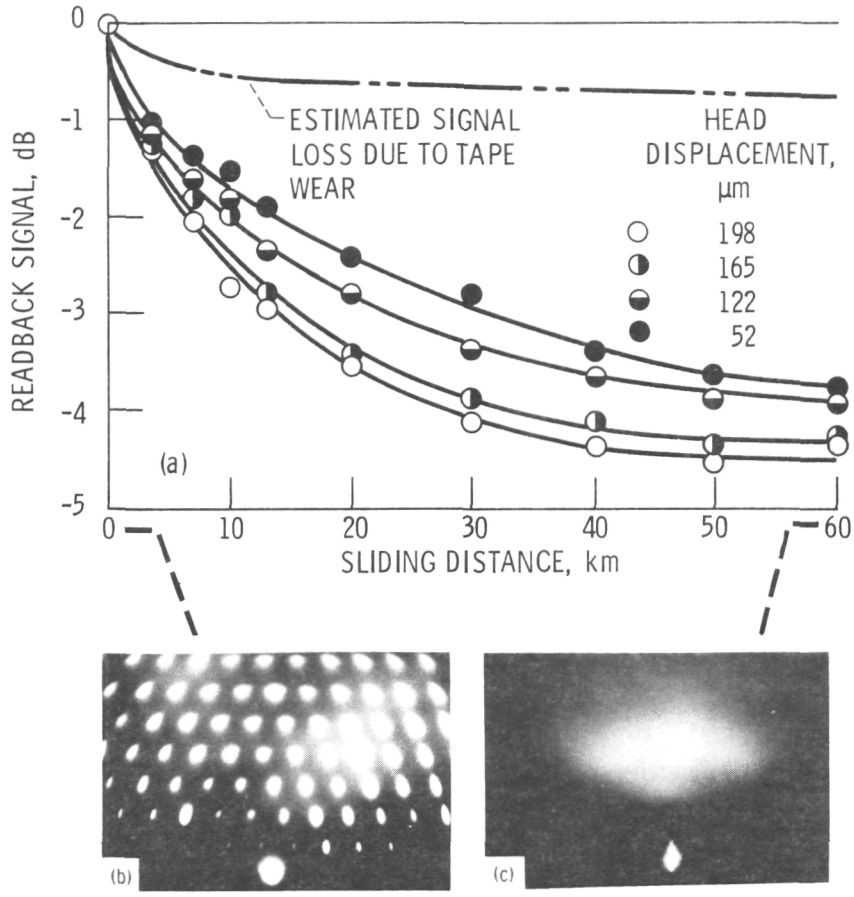

(a) Magnetic signals.

(b) Highly strained single-crystal structure of chemically etched surface. Sliding distance, 0 km.

(c) Nearly amorphous structure of wear surface. Sliding distance, 60 km.

Fig. 5. - Change in crystalline structure of chemically etched Mn-Zn ferrite head in relation to sliding distance against a magnetic tape and effect of change on magnetic signals.

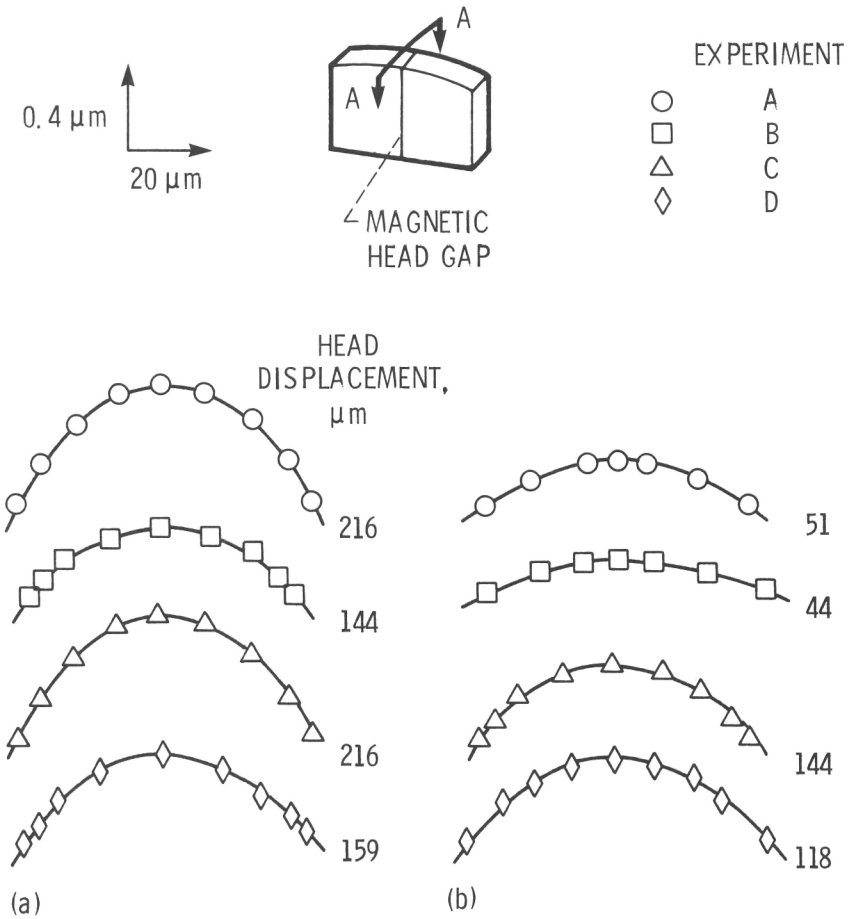

(a) Preworn surface before experiment.

(b) Wear surface after experiment.

Fig. 6. - Changes of end-view contours of magnetic heads at magnetic gap (lateral cross section A-A of wear surface of magnetic head. Initial tape tension, 0.2 N; total sliding distance with a magnetic tape, 40 km.

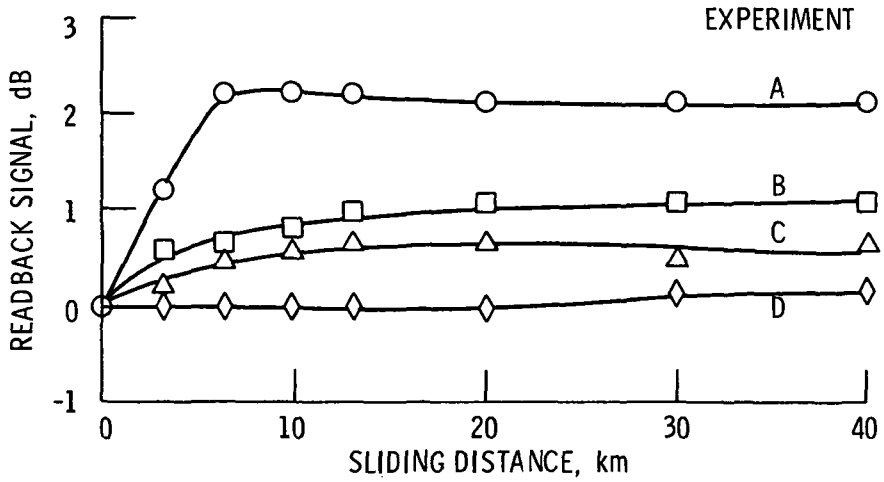

Fig. 7. - Readback signal amplitude as function of changes in end-view contours of magnetic head with sliding distance. Initial tape tension, 0.2 N.

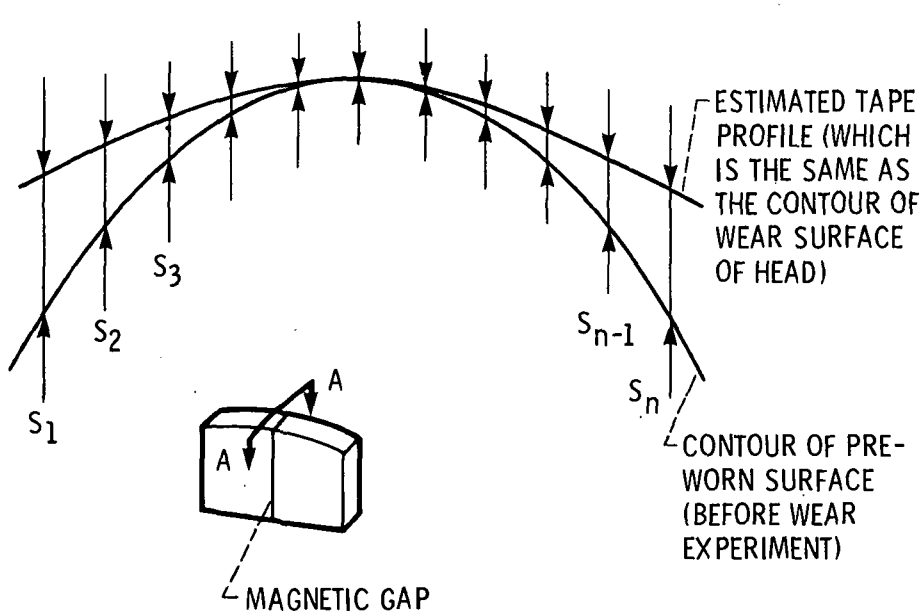

Fig. 8. - Estimation of spacing between tape and magnetic-head preworn surface at beginning of wear experiment from contours of preworn and wear surfaces.

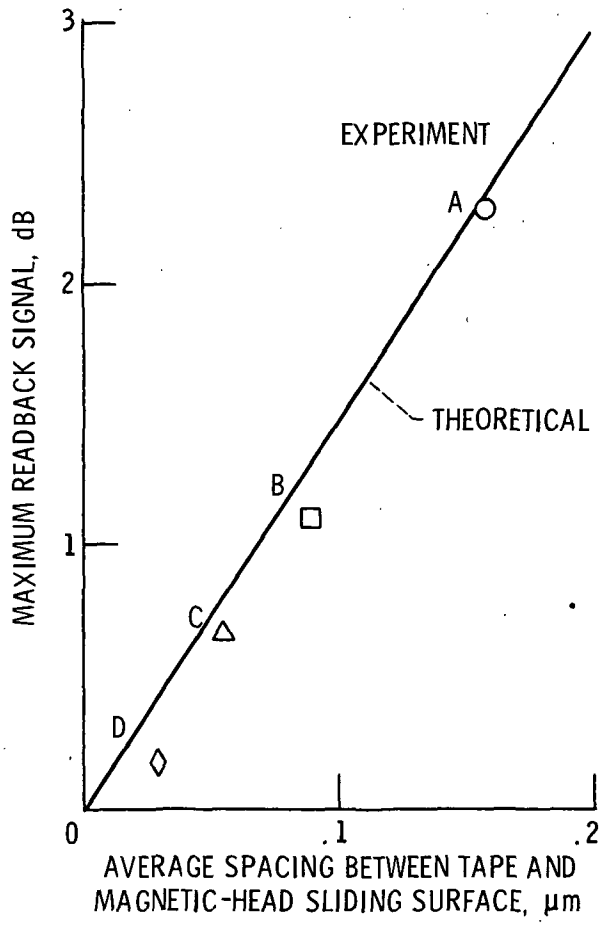

Fig. 9. - Maximum readback signal amplitude as function of average spacing between tape and magnetic-head sliding surface.

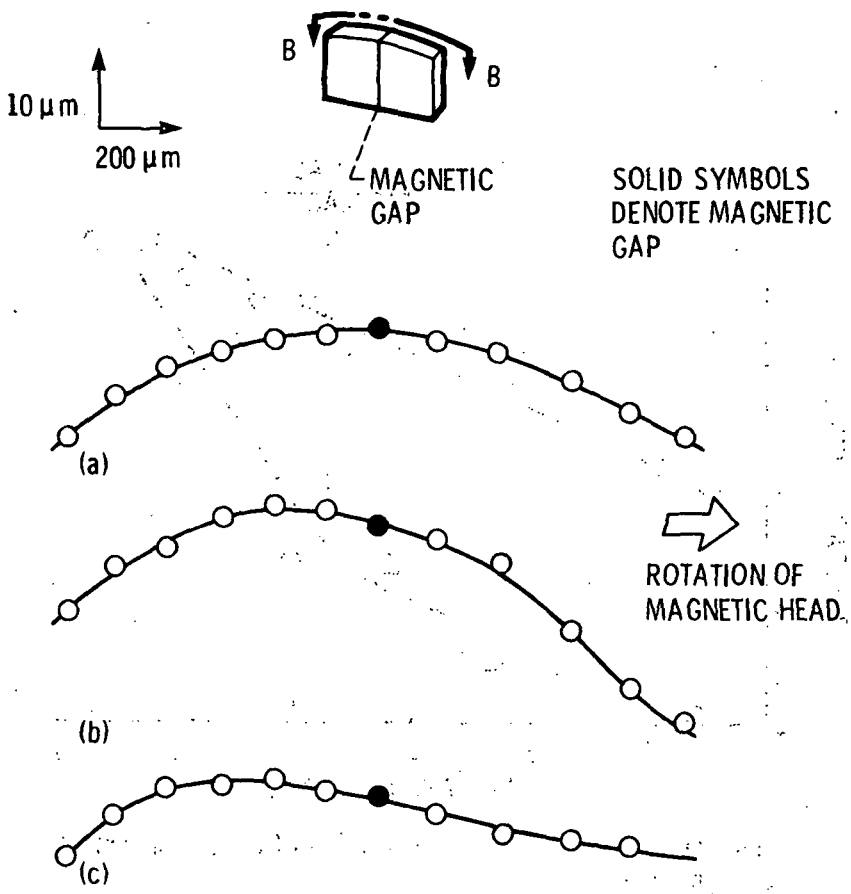

(a) Lapped surface.

(b) Surface after wear experiment. Head displacement, 214 μm; tape tension, 0.6 N; sliding distance, 1190 km.

(c) Surface after wear experiment. Head displacement, 161 μm; tape tension, 0.6 N; sliding distance, 1190 km.

Fig. 10. - Side-view contours (longitudinal section B-B) of magnetic-head sliding surface.

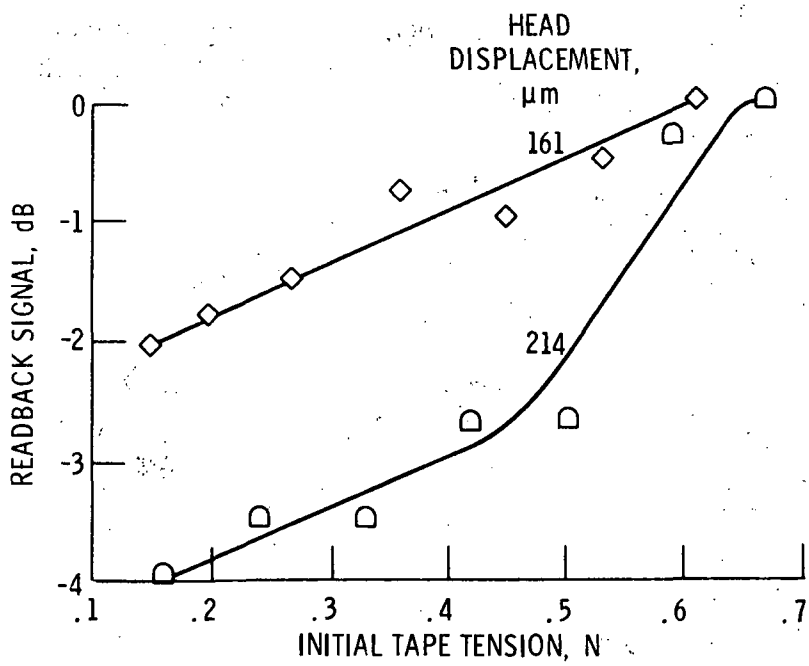

Fig. 11. - Readback signal amplitude as function of applied tape tension.

1. Report No.	2. Government Accession No.	3. Recipient's Catalog No.
NASA TM-87277		

4. Title and Subtitle	5. Report Date
Effect of Crystallographical and Geometrical Changes of a Ferrite Head on Magnetic Signals During the Sliding Process With Magnetic Tape	6. Performing Organization Code: 506-43-11
7. Author(s): Kazuhisa Miyoshi, Donald H. Buckley, and Kyuichiro Tanaka	8. Performing Organization Report No.: E-2955
	10. Work Unit No.
9. Performing Organization Name and Address: National Aeronautics and Space Administration, Lewis Research Center, Cleveland, Ohio 44135	11. Contract or Grant No.
	13. Type of Report and Period Covered: Technical Memorandum
12. Sponsoring Agency Name and Address: National Aeronautics and Space Administration, Washington, D.C. 20546	14. Sponsoring Agency Code

15. Supplementary Notes

Prepared for the 1986 Joint Tribology Conference, cosponsored by the American Society of Lubrication Engineers and the American Society of Mechanical Engineers, Pittsburgh, Pennsylvania, October 19-22, 1986. Kazuhisa Miyoshi and Donald H. Buckley, NASA Lewis Research Center; Kyuichiro Tanaka, Kanazawa University, Kanazawa, Japan.

16. Abstract

This paper reviews changes in the crystalline structure and geometry of lapped Mn-Zn ferrite heads in sliding contact with magnetic tape and the effects of these changes on magnetic signals. A highly textured, polycrystalline structure was produced on the surface of a single-crystal Mn-Zn ferrite head when it was finished with an aluminum oxide lapping tape. Sliding this lapped surface against a magnetic tape produced a nearly amorphous structure. The sliding process led to a degradation in readback signal of 1 to 2 dB (short-wavelength recording). Furthermore, wear of the magnetic head caused geometrical changes in the head surface. The signal read back with the worn magnetic head was sensitive to operating parameters such as head displacement and tape tension. A change in operating parameters created head-to-tape spacings and, consequently, excessive gains or losses in the readback signal.

17. Key Words (Suggested by Author(s))	18. Distribution Statement
Mn-Zn ferrite Magnetic tape Signal loss	Unclassified - unlimited STAR Category 27

19. Security Classif. (of this report)	20. Security Classif. (of this page)	21. No. of pages	22. Price*
Unclassified	Unclassified		

*For sale by the National Technical Information Service, Springfield, Virginia 22161

National Aeronautics and
Space Administration

Lewis Research Center
Cleveland, Ohio 44135

Official Business
Penalty for Private Use $300

SECOND CLASS MAIL

ADDRESS CORRECTION REQUESTED

U.S. MAIL

Postage and Fees Paid
National Aeronautics and
Space Administration
NASA-451

NASA