NASA Technical Memorandum 100950

Component Improvement of Free-Piston Stirling Engine Key Technology for Space Power

(NASA-TM-100950) COMPONENT IMPROVEMENT OF FREE-PISTON STIRLING ENGINE KEY TECHNOLOGY FOR SPACE POWER (NASA) 13 p CSCL 10B

N88-25476

Unclas

G3/20 0151352

Donald L. Alger
Lewis Research Center
Cleveland, Ohio

Prepared for the
4th International Conference on Stirling Engines
sponsored by the Japan Society of Mechanical Engineers
Tokyo, Japan, November 7-10, 1988

NASA

COMPONENT IMPROVEMENT OF FREE-PISTON STIRLING ENGINE

KEY TECHNOLOGY FOR SPACE POWER

Donald L. Alger
National Aeronautics and Space Administration
Lewis Research Center
Cleveland, Ohio 44135

ABSTRACT

The successful performance of the 25-kW Space Power Demonstrator (SPD) engine during an extensive testing period has provided a baseline of free-piston Stirling engine technology from which future space Stirling engines may evolve. Much of the success of the engine was due to the initial careful selection of engine materials, fabrication and joining processes, and inspection procedures. Resolution of the few SPD engine problem areas that did occur has resulted in the technological advancement of certain key free-piston Stirling engine components. Derivation of two half-SPD, single-piston engines from the axially opposed-piston SPD engine, designated as Space Power Research (SPR) engines, has made possible the continued improvement of these engine components. The two SPR engines serve as test-bed engines for testing of engine components.

Some important fabrication and joining processes are reviewed. Also, some component deficiencies that were discovered during SPD engine testing are described and approaches that were taken to correct these deficiencies are discussed. Potential component design modifications, based upon the SPD and SPR engine testing, are also reported.

INTRODUCTION

Improvement of free-piston Stirling engine components has been a continuing effort since the fabrication and initial testing of the SPD engine during the 1984-85 period. This work effort is being carried out as part of the SP-100 Advanced Technology Program conducted by NASA Lewis Research Center.

A description of the SPD engine, and details of engine testing, have been reported elsewhere (1,2). The SPD engine, as shown in the cut-a-way drawing of Fig. 1, is actually two free-piston Stirling engine/alternators constructed in an axially opposed configuration. A brief listing of the engine's nominal characteristics is given in Table I.

The careful selection of materials, fabrication and joining processes, and inspection techniques contributed toward the overall successful performance of the SPD engine. As an example, the approaches taken to ensure that welding and brazing procedures were adequate, are illustrated in this paper for the SPD engine's heat exchangers.

The SPD engine performed very well. The many technological successes achieved by the engine far outweighed the few component deficiencies that occurred during engine testing. As testing continued, however, it became apparent that some engine components needed further development work to correct a minor problem or to improve the performance of a component. Diagnostic tests were performed to define the specific problem areas. Work efforts were then undertaken to improve the performance of the appropriate components.

It was decided that component technological development could be carried out more efficiently by cutting the SPD engine into two pieces to produce two half-SPD engines. With the addition of closure hardware to complete the pressure vessel of each half-SPD engine, the engine halves were renamed Space Power Research (SPR) engines. One such engine is shown in Fig. 2. The SPR engines are unbalanced engines that are either attached to a large mass or to a vibration absorber to reduce the vibration amplitude of the engine casing to an acceptable level.

Although some initial engine component testing was accomplished with the SPD engine, most of the component improvements have been carried out with the SPR engines. One SPR engine was delivered to NASA Lewis, the other was retained by the Mechanical Technology, Inc., Latham, New York, the company who designed and fabricated the engines. Both SPR engines are being used to advance free-piston Stirling engine technology. This work is continuing.

This paper concentrates upon the technological evaluation and improvement of four engine components that have a significant impact upon free-piston Stirling engine performance. These components include the regenerator, the heat exchangers, the piston and displacer gas bearing

system, and the alternator. Each component will be discussed separately in the following sections.

REGENERATOR

The initial choice of regenerator matrix for the SPD engine consisted of a stack of individual, annular, unsintered screens which were sandwiched between the heater and cooler tube sheets. Unsintered screens were chosen over sintered screens because previous testing of the unsintered screens had shown that these screens provided a slight engine efficiency advantage over the sintered screens (3).

The regenerator matrix for each of the two regenerators of the SPD engine is made up of a stack of 350 annular shaped, 200 mesh, woven screens with a wire thickness of 41 μm, or a screen crossover nominal thickness of 82 μm (Fig. 3). The screens fill a regenerator length of about 2.54 cm.

The loose regenerator screens were installed into the base of the heater, as shown in Fig. 4. The cooler assembly, shown in Fig. 5, was then slid into place at the base of the screens and was supposed to compress the loose screens tightly together. Unfortunately, the initial batch of screens had been subjected to a light cold-roll process after the wire weaving process. The rolling process has reduced each screen thickness, at the crossovers, by 20 percent. The effect of the cold-roll process can be seen in the scanning electron micrograph of the "as received" screen shown in Fig. 6. These dimensional changes were not detected prior to engine operation, allowing the screens to move freely within the regenerator cavity.

After more than 75 hr of operation, the engine was shut down for routine inspection. Screen debris was found throughout the engine. Metallurgical analysis of the debris determined it to be cracked-off-deformed pieces of the 304 stainless steel regenerator screen. Scanning electron microscopy of the cracked screens revealed failures occurring at wire crossovers (Fig. 7) and fatigue striations on the fracture surface of the wires. It was determined that failure of the screens occurred at wire crossovers where there were; a 30 percent reduction of wire thickness, stress concentration, and a highly worked microstructure, all of which provided a site for crack initiation and subsequent fatigue failure. Details of the regenerator matrix failure are reported in Ref. 4.

After the initial regenerator failure, a modified regenerator made of a sintered regenerator matrix, has been used. No further regenerator matrix failures have occurred during subsequent engine testing.

HEAT EXCHANGERS

A tube-and-shell heat exchanger configuration was chosen for the heaters and coolers of the SPD engine. During engine operation, the helium working fluid flows through the heater and cooler tubes. The heater heat transfer medium, HITEC salt (a eutectic mixture of sodium nitrite, sodium nitrate, and potassium nitrate), flows through the shell of the heater (5). A water/ethylene glycol solution flows through the shell of the cooler.

The SPD engine's heat exchanger assembly, as shown in Figs. 1 and 8, consists of one unit which houses the heaters, regenerators and coolers of both engines. The region between the heaters defines the common expansion space for the two opposed engines. The entire assembly, including the tube plates and tubes, was fabricated of Inconel 718 alloy. The assembly, except the tubes was E-beam welded together. During welding, the E-beam welding parameters required careful definition in order to minimize the formation of microcracks in the heat-affected-zone of each E-beam weld. This was accomplished by welding numerous samples, having the same geometrical configuration and thickness as the actual heat exchanger part, followed by metallurgical evaluation of the samples for the existence of microcracks.

Each heater or cooler incorporated more than 1600 tubes. A total of nearly 14 000 braze joints were needed to secure the tubes to the tube plates in a complete SPD engine. Since Inconel 718 tends to form a protective oxide film following machining, the braze surface areas were plated with electroless nickel prior to brazing. To minimize cracking of any of the numerous braze joints, a ductile braze compound, gold/nickel (82/18), was used.

Since the corrosion resistance of Inconel 718 in HITEC salt solution was unknown, a corrosion test was performed. Inconel 718 samples, and samples of Inconel 718 brazed with gold/nickel braze material, were submerged in the HITEC salt solution at a temperature of 650 K for approximately a 300-hr period. Only minimal corrosion of the Inconel 718, and no apparent attack of the braze material, occurred over that time period. Metallographic examination of the cross section of each Inconel 718 sample showed an insignificant, thin, uniform corrosion product scale and no intergranular penetration.

The complex tube-and-shell exchangers have performed well, without failure, for more than 350 hr of SPD (and SPR) engine testing. Although the SPD engine's heater functioned well at the 650 K temperature, heat exchangers for advanced engines will operate at a higher temperature (1050 K or higher), which is beyond the capability of the HITEC salt. A modular type of heater head, shown conceptually in Fig. 9, illustrates one type of heater-regenerator-cooler heat exchanger configuration that is being considered. At the 1050 K temperature of the next generation of space Stirling engines being studied by NASA (1,2), the heat transfer medium for the heater will be a liquid metal like sodium or potassium. Whether a heat pipe or a flowing liquid metal configuration is chosen for the future heat exchangers, it is most likely that an all-welded design will be selected to avoid the exposure of dissimilar metals to the liquid metal environment.

In the design of the modular type of heater shown in Fig. 9, the material chosen to fabricate the module must provide the creep-rupture strength required for long life in space and, at the same time, have a reasonable thermal conductivity in order to minimize the temperature drop across the heat pipe wall. A cross-section of a typical module showing the helium flow passageways and the heat pipe wall is shown in Fig. 10.

GAS BEARINGS

The SPD engine was designed to operate at a 20 mm stroke. Hydrostatic gas bearings were used to support the piston and displacer, but the bearing system was not designed for part-stroke operation. Gas for the bearing system was designed to be pumped from the piston gas springs by an integral ported compressor. A bearing manifold pressure of 5 to 7 bar was required for effective support of the piston and displacer at full piston stroke. The bearing gas was manifolded through passageways in the cylinder wall to orifices through the walls of the piston and displacer cylinders. This flow of helium established the gas bearings for support of the piston and displacer. The orifices can be seen in the power piston cylinder shown in Fig. 11.

During early testing of the SPD engine, it was necessary to operate the engine extensively at part-stroke. Therefore, considerable modification of the bearing system (orifices, etc.), or use of an external compressor, was required in order to maintain bearing manifold pressure for part-stroke operation. An external compressor was chosen for the engine testing.

Although the hydrostatic bearing system worked well in the SPD engine, there are areas where improvement could occur. First, the bearing system should be modified to accommodate part-stroke engine operation. Second, the hydrostatic bearing system consumes about 10 percent of the engine's power and this loss should be better understood and reduced. And finally, the complex and costly bearing manifolds and other structural parts should be simplified.

Efforts to advance gas bearing technology are continuing. Included in the work is the evaluation of a hydrodynamic gas bearing system as described in Refs. 1 and 2. The advantage of hydrodynamic bearings are improved efficiency, enhanced hardware simplicity, and an overall more flexible design.

LINEAR ALTERNATOR

The design of the SPD engine was accomplished under a considerable time constraint. That is, the entire program, from design to test, was carried out in 16 months. In the interest of maintaining schedule as well as reducing the cost of the materials, some alternator structural support materials, which had magnetic permeability values considerably greater than one, were substituted for the nonmagnetic materials initially considered. For example, the power piston cylinder, which was originally designed to be made of beryllium, was actually fabricated from 4340 steel - an alloy that quite closely matched the thermal expansion coefficient of the beryllium piston. Similarly, the joining ring and pressure vessel were fabricated from a relatively inexpensive PH13-8Mo alloy. Although these material substitutions were effective in helping to complete the engine on schedule and within the planned cost, the substitutions did, however, cause a greater loss of alternator power than was anticipated.

As reported elsewhere (1,2), the approximate 70 percent efficiency of the SPD engine's alternator at design power was considerably lower than the design efficiency of 93 percent. Eddy currents generated in the support structure were suspected as the major source of alternator power loss. Static diagnostic tests were performed to define the components responsible for this loss and to provide a rough quantitative value of the extent of the power loss caused by each component. With the piston/plunger held fixed to prevent its motion, the stator coil was electrically energized while, one-by-one, the alternator structural elements were removed and the change in electrical power required to energize the coil was measured. This change in electrical power was a measure of power loss in that particular element. Figure 12 lists the structural elements that were tested and illustrates the effect of this power loss upon alternator efficiency.

It is quite clear that the cylinder, joining ring, and pressure vessel are responsible for the major portion of the power loss. Table II compares the magnetic permeability and electrical resistivity values of beryllium and 4340 steel. Based on this comparison, it is probable that eddy current losses in the cylinder will be drastically reduced by the use of a beryllium cylinder.

Similarly, the joining ring and pressure vessel were fabricated from PH13-8Mo alloy. Substitution of other materials (e.g., titanium) having a lower magnetic permeability and higher electrical resistivity should reduce the eddy current losses in these components.

The causes of other minor alternator losses are being defined in a similar manner.

CONCLUDING REMARKS

Four key SPD engine components have been discussed. Overall, the SPD engine performed extremely well. The minor SPD engine component deficiencies that did occur provided an opportunity to improve and upgrade the free-piston Stirling engine technology base. One component, the heat exchanger, is singled out to illustrate the degree of care that was exercised in carrying out the joining procedures for the SPD engine's complex heat exchanger. It was this kind of effort throughout the SPD engine development program that contributed to the successful completion of the engine. Technological development of engine components is continuing for potential space power use in future free-piston Stirling engines.

REFERENCES

1. Slaby, J.G.: 1988 Overview of Free-Piston Stirling Technology For Space Power at the NASA Lewis Research Center, NASA TM-100795, 1988.

2. Alger, D.L.: Progress Toward the Evolution of a Stirling Space Engine, NASA TM-100221, 1988.

3. Spatz, M.W.: Regenerator Matrices for Stirling Engines, Nineteenth Summary Report, Automotive Technology Development Contractors' Coordination Meeting, CONF-811090, DOE, 1981, pp. 240-258.

4. Hull, D.R., Alger, D.L., Moore, T.J., and Scheuermann, C.M.: Fatigue Failure of Regenerator Screens in a High Frequency Stirling Engine, NASA TM-88974, 1987.

5. Geiringer, P.L.: Handbook of Heat Transfer Media, Reinhold Publishing Corp., New York, 1962, pp. 208-213.

6. Gray, D.E.: American Institute of Physics Handbook, 3rd ed., McGraw-Hill, New York, 1972.

7. Brown, W.F. Jr., and King, B.: Beryllium. Nonferrous Alloys, Aerospace Structural Metals Handbook, Code 5101, Metals and Ceramics Information Center, Battelle Labs, Columbus, OH, June 1974.

8. Hickey, C.F., Jr.: PH13-8Mo. FeAH, Ferrous Alloys, Aerospace Structural Metals Handbook, Code 1510, Metals and Ceramics Information Center, Battelle Labs, Columbus, OH, Sept. 1973.

9. Commercially Pure Titanium. Nonferrous Alloys, Aerospace Structural Metals Handbook, Code 3701, Metals and Ceramics Information Center, Battelle Labs, Columbus, OH, Mar. 1963.

10. 4340, 4337 FeUH. Ferrous Alloys, Aerospace Structural Metals Handbook, Code 1206, Metals and Ceramics Information Center, Battelle Labs, Columbus, OH, Dec. 1963.

TABLE I. - SPACE POWER DEMONSTRATOR ENGINE NOMINAL OPERATING CHARACTERISTICS

Mean pressure, MPa	15
Frequency, Hz	105
Heater metal temperature, K	630
Cooler metal temperature, K	315
Piston PV power, kW	25
PV efficiency (power to piston/heat in.), percent	21

TABLE II. - PHYSICAL PROPERTIES OF SOME ALTERNATOR STRUCTURAL SUPPORT MATERIALS

Material	Electrical resistivity, μΩ-cm	Temperature, C	Magnetic permeability	Field strength, oersted
Beryllium	[a]3.25	22	Diamagnetic[b]	
4340 alloy	[c]29.7	299	Ferromagnetic[c]	
PH13-8Mo	[d]102.0	100	[d]52	10.5
			127	54.7
			85	110.5
			65	164.5
			53	217.0
Titanium	[a]43.1	22	[e]1.00005 to 1.00001	20.0

[a]Ref. 6
[b]Ref. 7
[c]Ref. 10
[d]Ref. 8
[e]Ref. 9

ORIGINAL PAGE IS
OF POOR QUALITY

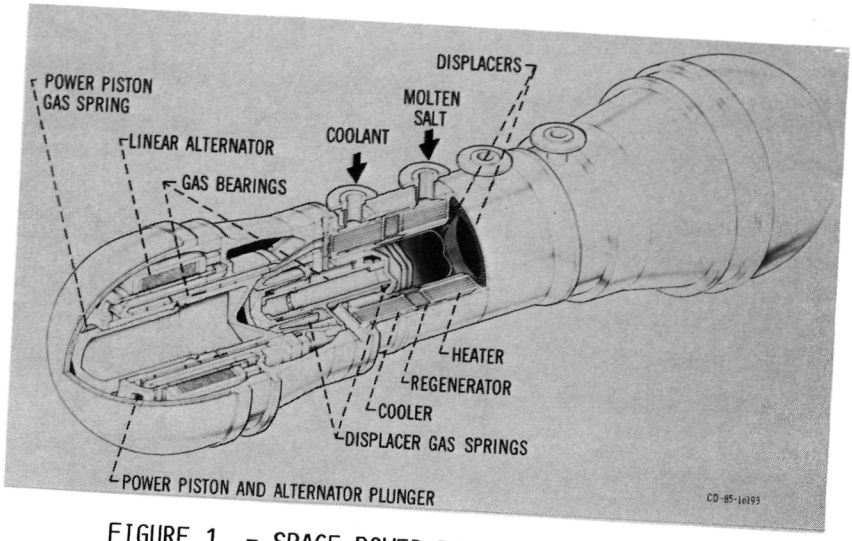

FIGURE 1. - SPACE POWER DEMONSTRATOR ENGINE.

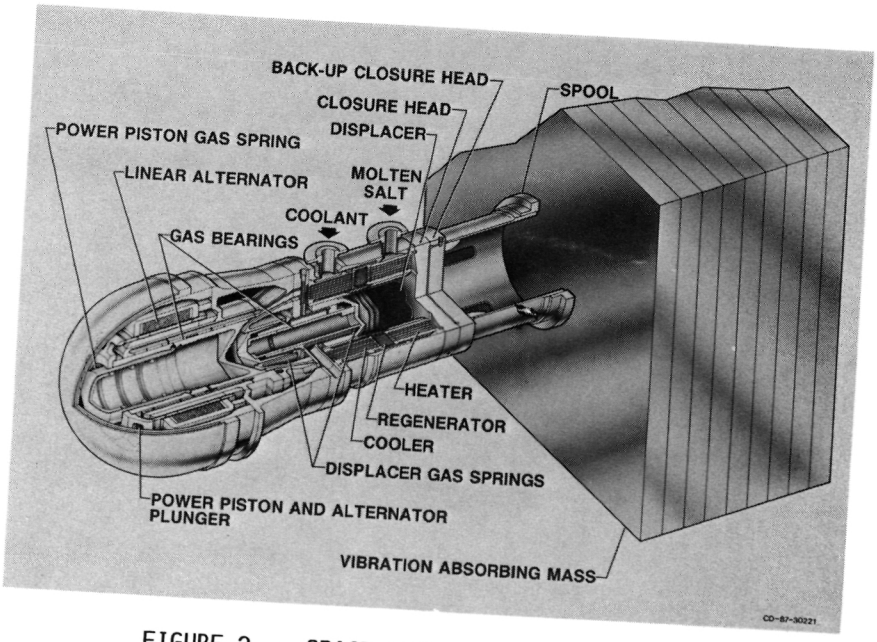

FIGURE 2. - SPACE POWER RESEARCH ENGINE.

ORIGINAL PAGE IS
OF POOR QUALITY

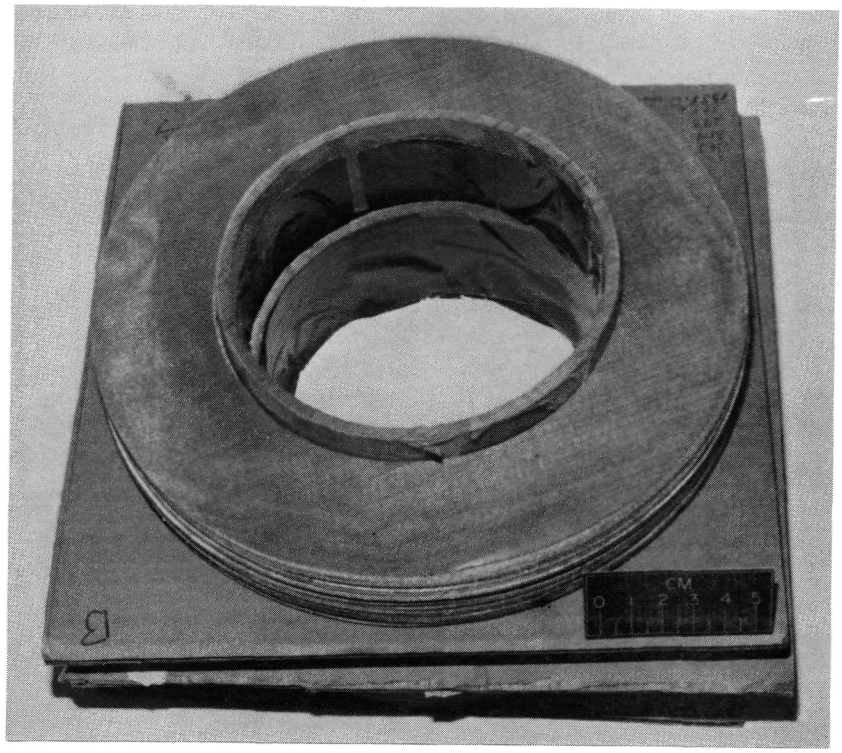

FIGURE 3. - STACK OF 350 TYPE 304 STAINLESS STEEL REGENERATOR SCREENS.

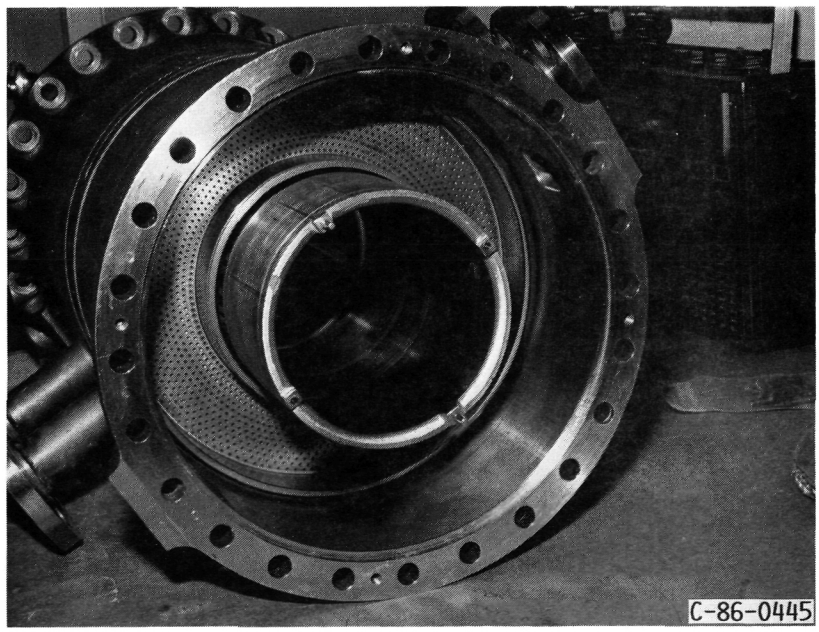

FIGURE 4. - DISASSEMBLED ENGINE SHOWING ANNULAR SPACE AT BASE OF HEATER WHERE REGENERATOR SCREENS ARE LOCATED.

ORIGINAL PAGE IS
OF POOR QUALITY

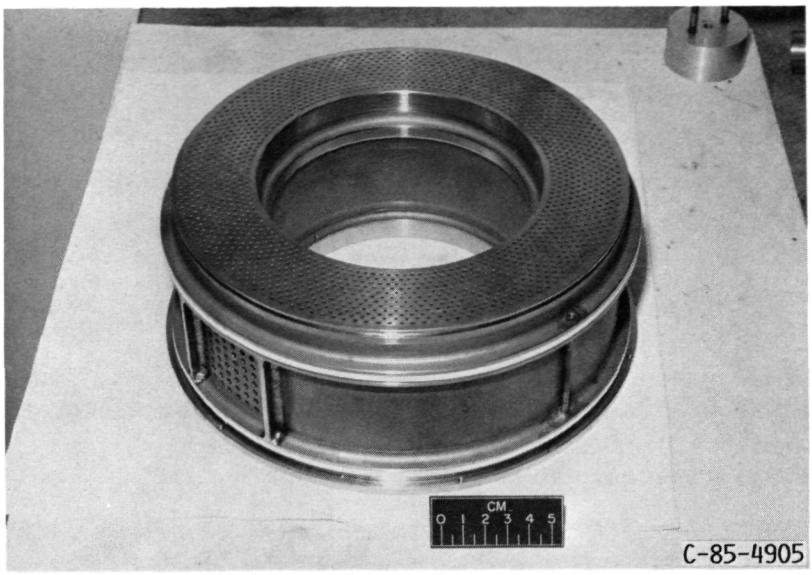

FIGURE 5. - COOLER ASSEMBLY.

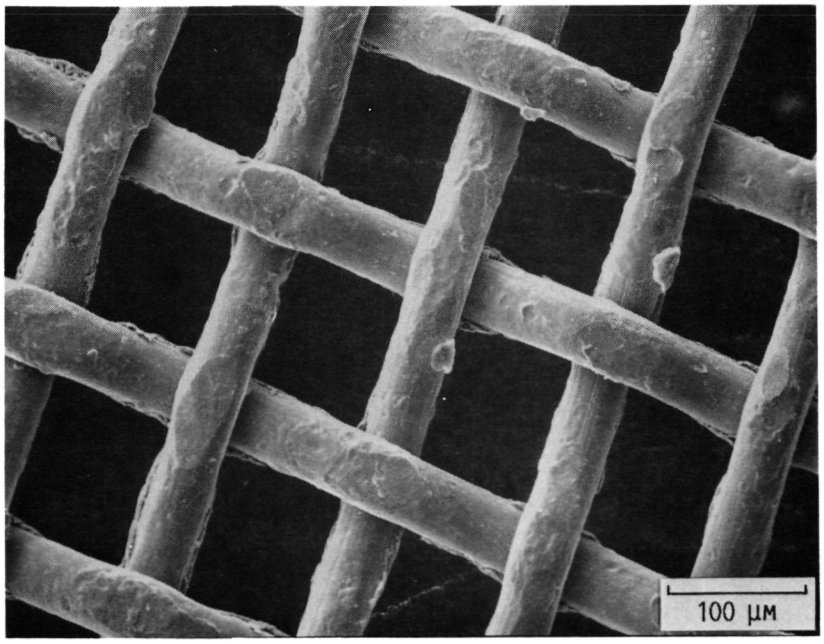

FIGURE 6. - SCANNING ELECTRON MICROGRAPH OF "AS-RECEIVED" REGENERATOR SCREEN.

ORIGINAL PAGE IS
OF POOR QUALITY

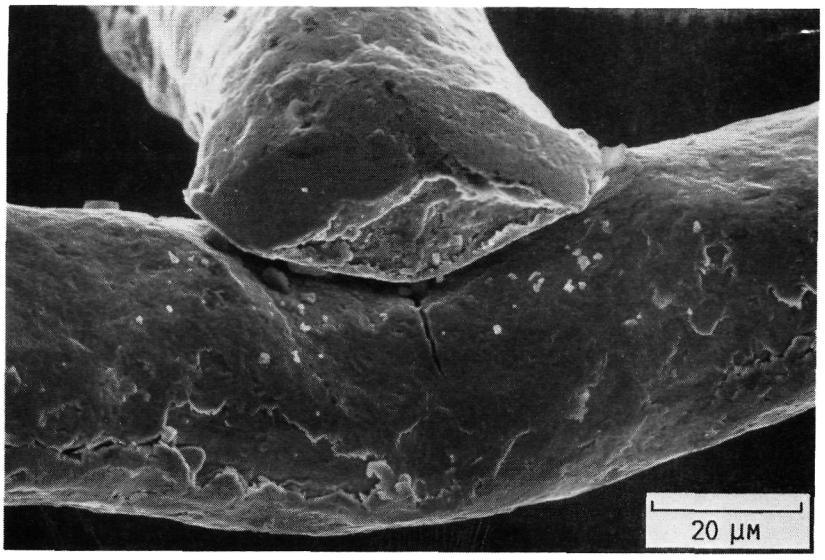

FIGURE 7. - SCANNING ELECTRON MICROGRAPH OF WIRE FRACTURE AT CROSSOVER.

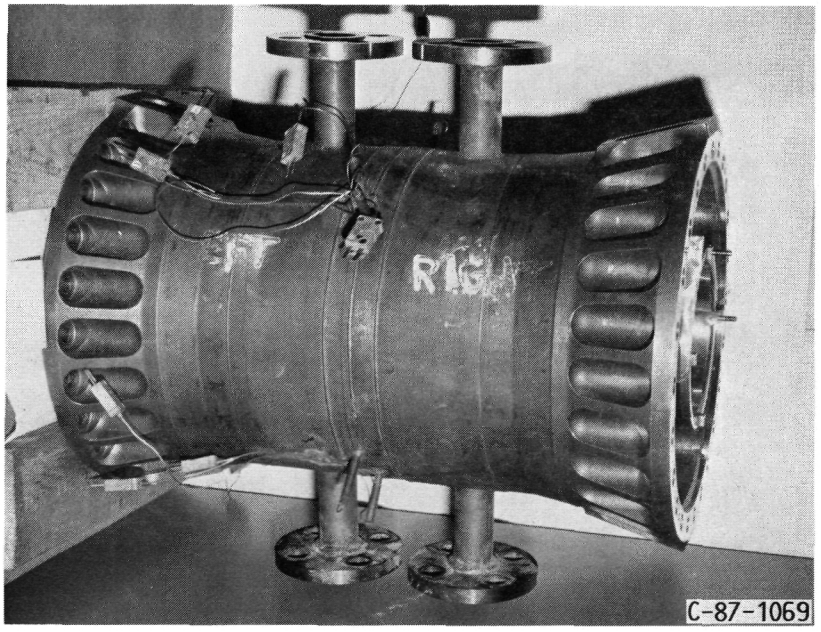

FIGURE 8. - SPD ENGINE'S HEAT EXCHANGER HOUSING.

ORIGINAL PAGE IS
OF POOR QUALITY

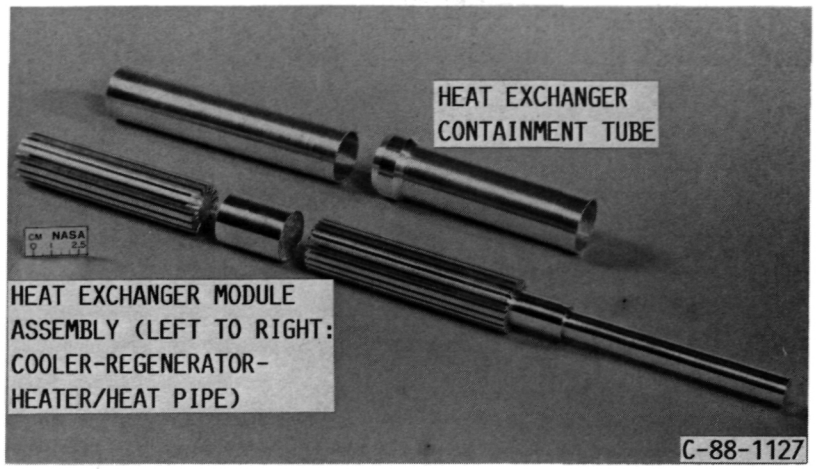

FIGURE 9. - STIRLING MODULAR HEAT EXCHANGER ASSEMBLY.

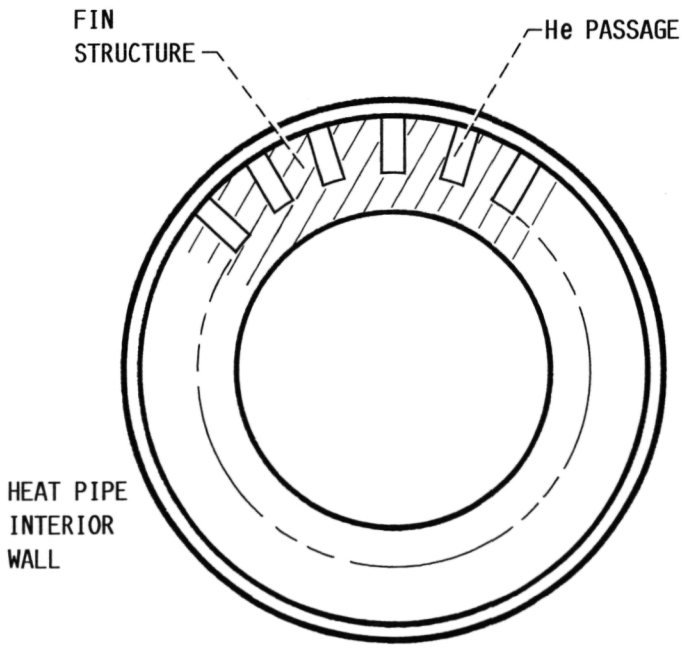

FIGURE 10. - CROSS SECTION OF MODULAR HEATER.

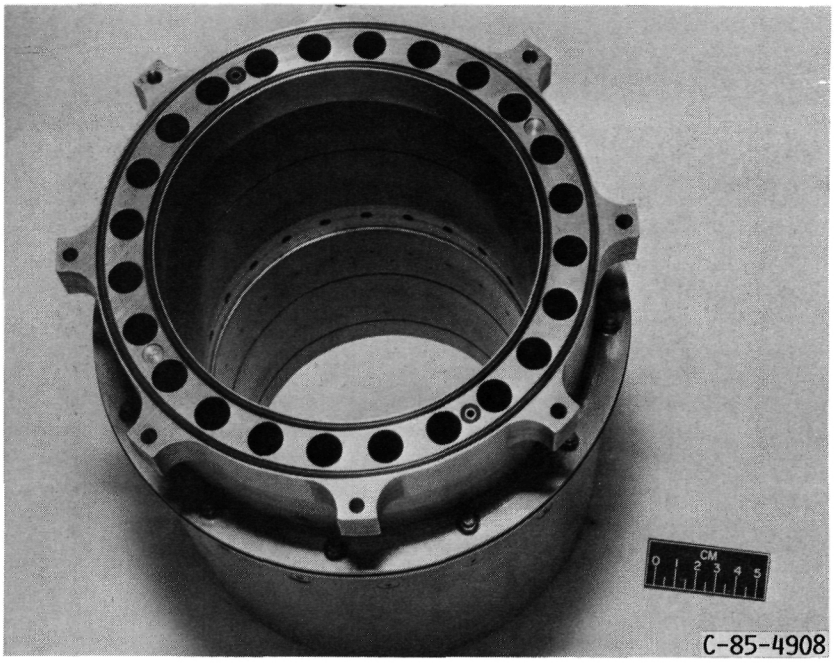

FIGURE 11. - SPD ENGINE'S CYLINDER SHOWING BEARING ORIFICES.

- MEASUREMENTS AT 100 HERTZ IDENTIFY LOSSES IN:
  - CYLINDER 9.5 EFFICIENCY POINTS
  - JOINING RING 9.3
  - STATORS 6.3
  - PRESSURE VESSEL 5.5
  - PLUNGER 4.2
  - TUNING CAPACITORS 0.2
- TOTAL MEASURED EFFICIENCY; POINT LOSSES 35
- ENGINE/ALTERNATOR TEST EFFICIENCY: POINT LOSSES 30

FIGURE 12. - MEASURED SPD ENGINE ALTERNATOR LOSSES.

ORIGINAL PAGE IS
OF POOR QUALITY

NASA
National Aeronautics and Space Administration

Report Documentation Page

1. Report No. NASA TM-100950	2. Government Accession No.	3. Recipient's Catalog No.
4. Title and Subtitle Component Improvement of Free-Piston Stirling Engine Key Technology for Space Power		5. Report Date
		6. Performing Organization Code
7. Author(s) Donald L. Alger		8. Performing Organization Report No. E-4243
		10. Work Unit No. 586-01-11
9. Performing Organization Name and Address National Aeronautics and Space Administration Lewis Research Center Cleveland, Ohio 44135-3191		11. Contract or Grant No.
		13. Type of Report and Period Covered Technical Memorandum
12. Sponsoring Agency Name and Address National Aeronautics and Space Administration Washington, D.C. 20546-0001		14. Sponsoring Agency Code

15. Supplementary Notes

Prepared for the 4th International Conference on Stirling Engines sponsored by the Japan Society of Mechanical Engineers, Tokyo, Japan, November 7-10, 1988.

16. Abstract

The successful performance of the 25-kW Space Power Demonstrator (SPD) engine during an extensive testing period has provided a baseline of free-piston Stirling engine technology from which future space Stirling engines may evolve. Much of the success of the engine was due to the initial careful selection of engine materials, fabrication and joining processes, and inspection procedures. Resolution of the few SPD engine problem areas that did occur has resulted in the technological advancement of certain key free-piston Stirling engine components. Derivation of two half-SPD, single-piston engines from the axially opposed-piston SPD engine, designated as Space Power Research (SPR) engines, has made possible the continued improvement of these engine components. The two SPR engines serve as test-bed engines for testing of engine components. Some important fabrication and joining processes are reviewed. Also, some component deficiencies that were discovered during SPD engine testing are described and approaches that were taken to correct these deficiencies are discussed. Potential component design modifications, based upon the SPD and SPR engine testing, are also reported.

17. Key Words (Suggested by Author(s)) Stirling engines Free-piston stirling Space power	18. Distribution Statement Unclassified - Unlimited Subject Category 20

19. Security Classif. (of this report)	20. Security Classif. (of this page)	21. No of pages	22. Price*
Unclassified	Unclassified	12	A02

NASA FORM 1626 OCT 86

*For sale by the National Technical Information Service, Springfield, Virginia 22161

National Aeronautics and
Space Administration

Lewis Research Center
Cleveland, Ohio 44135

Official Business
Penalty for Private Use $300

FOURTH CLASS MAIL

ADDRESS CORRECTION REQUESTED

U.S.MAIL

Postage and Fees Paid
National Aeronautics and
Space Administration
NASA-451

NASA