N89 - 10091

Issues, Concerns, and Initial Implementation Results for Space Based Telerobotic Control

D. A. Lawrence*, J. D. Chapel**, and T. M. Depkovich†

ABSTRACT

Telerobotic control for space based assembly and servicing tasks presents many unique problems in system design. Traditional force reflection teleoperation schemes are not well suited to this new application, and the relatively new approaches to compliance control via computer algorithms have yet to see significant testing and comparison. These observations are discussed in detail, as well as the concerns they raise for imminent design and testing of space robotic systems.

As an example of the detailed technical work yet to be done before such systems can be specified, a particular approach to providing manipulator compliance is examined experimentally and through modeling and analysis. This yields some initial insight into the limitations and design trade-offs for this class of manipulator control schemes. Implications of this investigation for space based telerobots are discussed in detail.

* Staff Engineer, Martin Marietta Denver Aerospace
** Senior Engineer, Martin Marietta Denver Aerospace
† Senior Staff Engineer, Martin Marietta Denver Aerospace

This work was performed under IRAD D-75D.

1. INTRODUCTION

Although there has been an intense amount of activity in the area of control system design for robotic manipulator systems over the past ten years, little has surfaced in the way of a unified body of theory that can be readily applied for a given application. For example, the tremendous amount of work in the area of nonlinear systems theory has failed to produce general techniques for control system design that clearly outperform conventional independent joint control techniques. In a similar vein, the work in the area of compliant control systems has failed to produce a consensus on a method for control when environmental interaction is required. All of these problems are further compounded when system requirements dictate the need for both teleoperator and autonomous operational modes. Unfortunately, some solid answers and directions are required now since both NASA and the DOD are ready to embark on major system developments.

Our research and development work at Martin Marietta has focussed on a hierarchical approach to the development of robotic control systems. A general task breakdown is shown in Figure 1. While research continues in the area of nonlinear control methods, we have nonetheless been able to implement reliable compliant control structures that have demonstrated a great deal of promise. This has, in turn, allowed work to proceed in both teleoperation and autonomous coordinated dual arm control structures. The benefits of this approach are twofold. First, it has forced us to make maximum usage of existing theory to develop an overall control structure that supports both autonomous and teleoperated operations for both single and dual arm systems. Secondly, it has consistently forced the issue of hardware implementation. As a result, all key aspects of system performance have been demonstrated on a dual arm laboratory testbed.

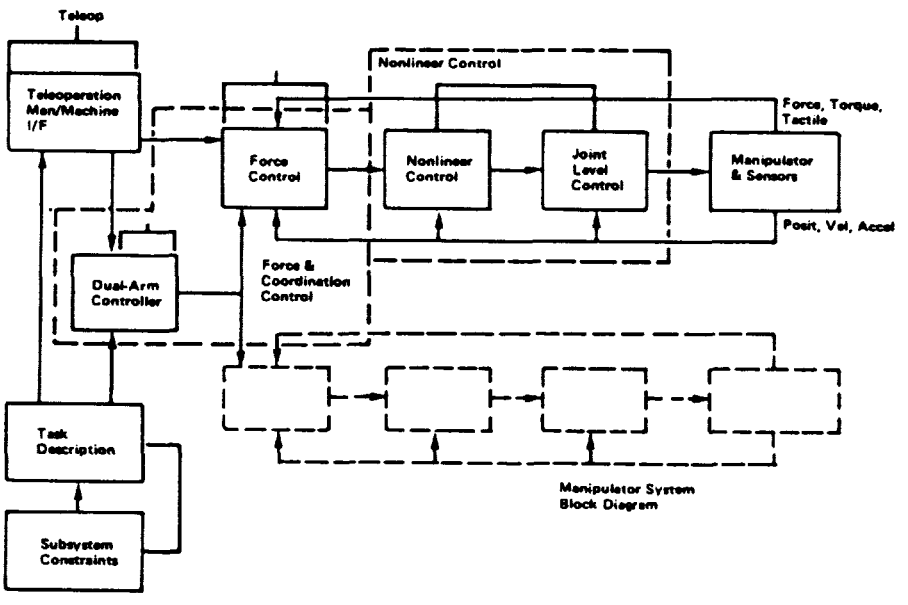

Figure 1. *Overall manipulator control block diagram.*

This paper focusses on the heart of our system--single arm compliant control strategies. The control structure to be described in detail in the following sections relies on independent joint level control but allows specification of the dynamic impedance of the manipulator in any specific reference frame. We view this structure as both a reasonable compliant controller baseline and a tool for more advanced studies. In particular, we present some detailed results on the modeling, analysis, and limitations of this approach to providing compliance for manipulator/task interactions.

2. BACKGROUND AND MOTIVATION

Although advancements in artificial intelligence and computer vision promise fully autonomous robotic servicing in the future, near term space servicing systems, such as the flight telerobotic servicer (FTS), will be primarily teleoperated systems. Because these space servicing systems will be manually operated by a remote operator, small errors in aligning the telerobot with the worksite are almost unavoidable. As shown in an experimental module removal task presented later in this paper, these small errors in alignment and positioning can impart large forces upon the worksite, depending upon both the environmental and manipulator stiffnesses. Clearly, a key aspect of these systems will be the control of these environmental interaction forces.

Both nuclear and underwater teleoperation systems have extensively utilized the technique of bilateral force reflection or, simply, force reflection to control interaction forces. This technique provides force information to the operator by backdriving motors on the master arm with signals proportional to sensed forces. Because the master arm controls the position of the telerobot's manipulators, backdriving the master arm modifies the postion command to the manipulators. Thus, the dynamics of the teleoperator system using this force reflection scheme are determined by the characteristics of the hand controller/human arm combination. By using this scheme, teleoperation task completion times have been shown to be reduced by up to 40% [1].

There are substantial differences between these teleoperation systems and those envisioned for space teleoperation. Because space telerobotic servicing systems will be all electric, the damping inherent in hydraulic systems, which helps stabilize them, will not be available. Size and weight constraints, as well as scaling problems, will preclude the use of replica master controllers in space. The resulting D/A and A/D conversions and kinematic mapping calculations needed for digital control of the telerobot can introduce significant time delay into the system. Finally, the communications link may have minimal bandwidth resulting in a slowly sampled system controlled by a low bandwidth controller. Because all of these factors are expected to adversely affect system performance, review of the traditional teleoperator control techniques is warranted to assess their applicability to space telerobotics.

One alternative method of providing telerobot compliance can be realized by replacing the dynamics of the force reflection hand controller with a digital filter. In other words, the measured contact forces can be processed through a digital filter to provide the desired dynamic relation between experienced forces and manipulator motion commands. Because this control scheme effectively modifies the mechanical impedances of the manipulator according to the parameters of this digital filter, it is

known in the robot control literature as impedance control or force control [2,3]. Using this scheme, the stiffness, damping and inertia parameters, or mechanical impedance, can be programmed to vary the dynamic characteristics of the telerobot system. In particular, the filter parameters can be programmed so that the impedance controller has approximately the same closed loop dynamics as the bilateral force reflection controller. It is this equivalence between the two controllers that we wish to exploit to further understand the control of environmental interaction forces for telerobots.

PRACTICAL IMPLEMENTATION

The robotic laboratory facilities used to examine these two telerobot force control schemes at Martin Marietta are shown in Figure 2. The Cincinnati-Milacron T^3-726 industrial robots are essentially position-control devices, servoing about a given reference position. The operator can modify the reference position by moving a compact, 6-DOF hand controller, which has the capability for force feedback. Because the hand controller has only ± 1 inch travel in the three translational degrees of freedom and only ± 30 degrees travel in the three rotational degrees of freedom, it must be indexed or "racheted" to produce large changes in the robot's position. Each robot has a 6-DOF force-torque sensor attached to the mounting plate of the gripper. The force information from this sensor can be used to drive the force feedback motors on the hand controller thereby providing bilateral force reflection, or can be used as inputs to the impedance filter whose outputs are used to modify the robot's reference position directly.

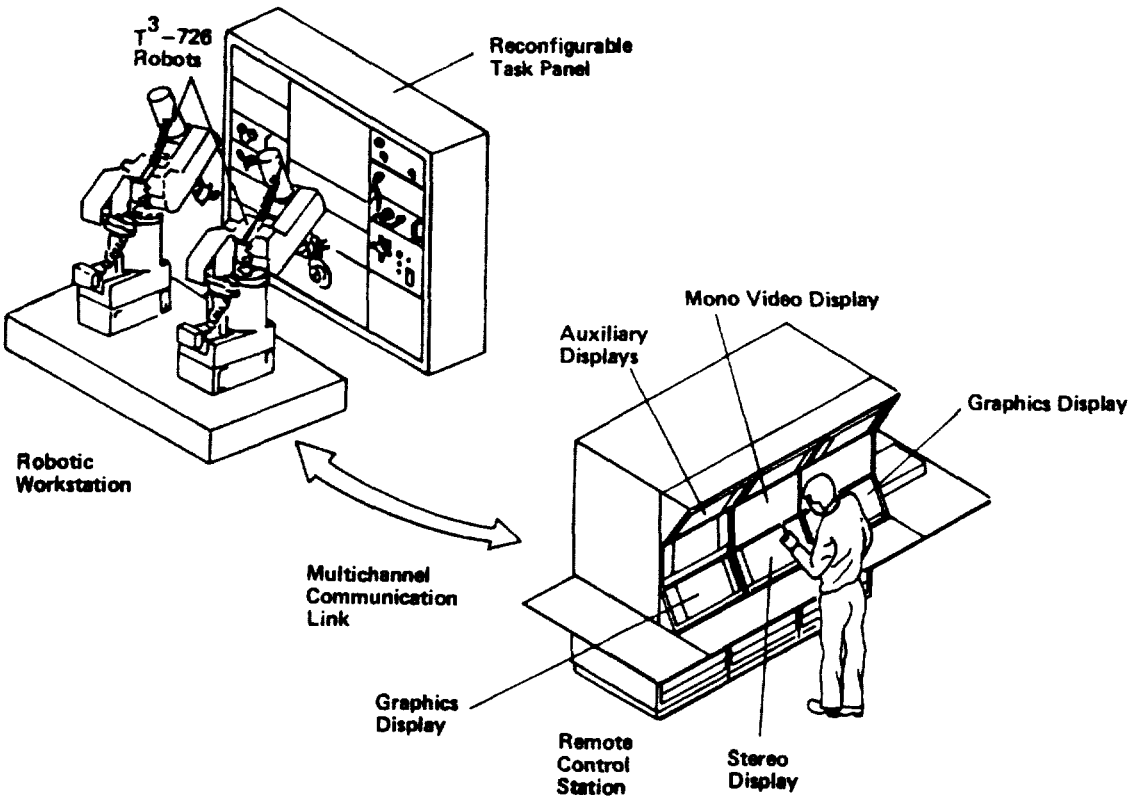

Figure 2. Martin Marietta telerobotic research facilities.

To compare these two control techniques, a module removal task was chosen as representative of spacecraft servicing. In the laboratory, this task is simulated by a task panel drawer that slides along an axis, x_p, perpendicular to the task panel's face. To demonstrate the performance in compensating for small misalignments, the task panel is set up so that the
task panel's coordinate system must be rotated by an angle θ to align the task panel's x_p axis with the robot's x coordinate axis, as shown in Figure 3. This angle is only 4 degrees, so it is difficult, at best, for the operator to determine that any misalignment exists. To perform the task successfully, the operator must command the manipulator to grasp the handle on the drawer, pull the drawer out to its full extension, hold it at that point for 10 to 15 seconds, and then push the drawer closed. As mentioned earlier, the hand controller must be racheted to move the manipulator from the initial grasp point to tthe maximum x displacement, which is about 10 inches. Because of this racheting action, the position profile in the x direction is expected to be as shown in Figure 3. The manipulator and the environment are assumed to have stiffnesses K_m and K_e, respectively in the directions of interest. Therefore, as the minipulator is given a commanded position trajectory to pull the drawer along the manipulator's x axis, the misalignment angle θ will produce a static force in the y direction of

$$D\left(\frac{K_e K_m}{K_e + K_m}\right)\sin\theta \approx DK_e \sin\theta$$

where D is the distance measured along the x axis from the initial grasp point. The expected force profile in the y direction is also given in Figure 3.

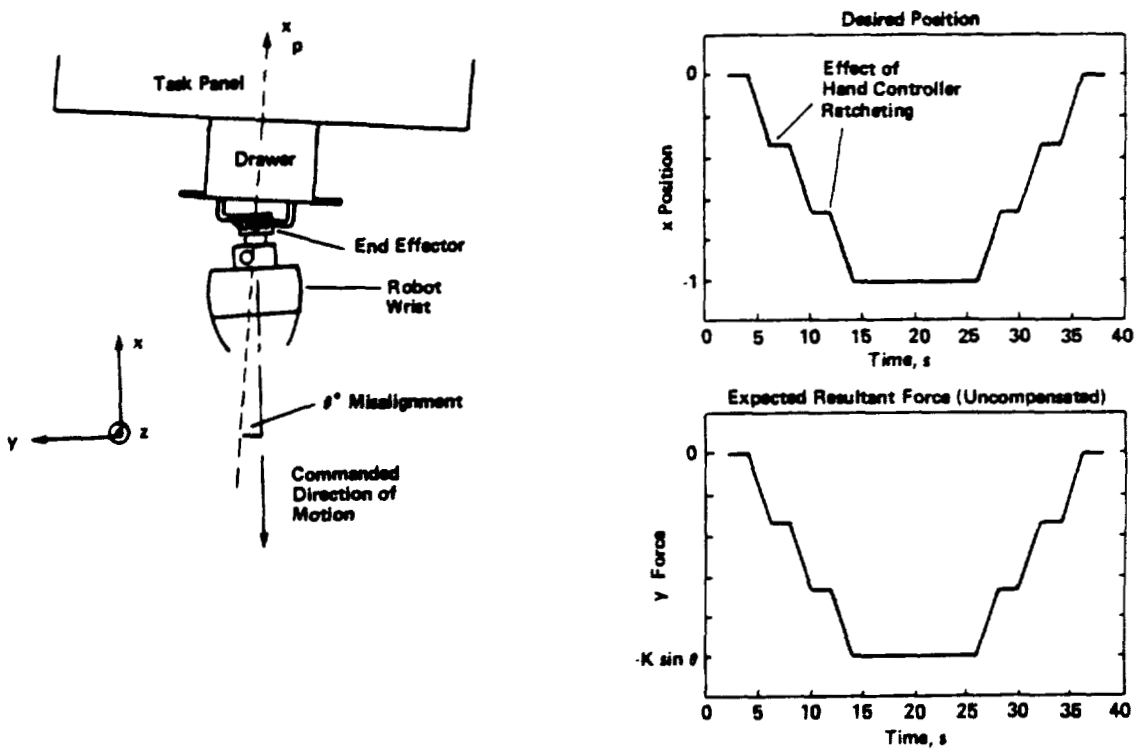

Figure 3. *Misaligned module removal task.*

Three independent trials were made using this experimental setup. In the first trial, the force information was not used in any way so the operator had only visual information to perform the required task. In the second trial, the technique of bilateral force reflection was used to drive the motors on the hand controller proportionally to the sensed forces. In the third trial, the force information was used as input to an impedance filter, and the output of this filter was used to modify the position references. The results of this experiment are shown in Figure 4.

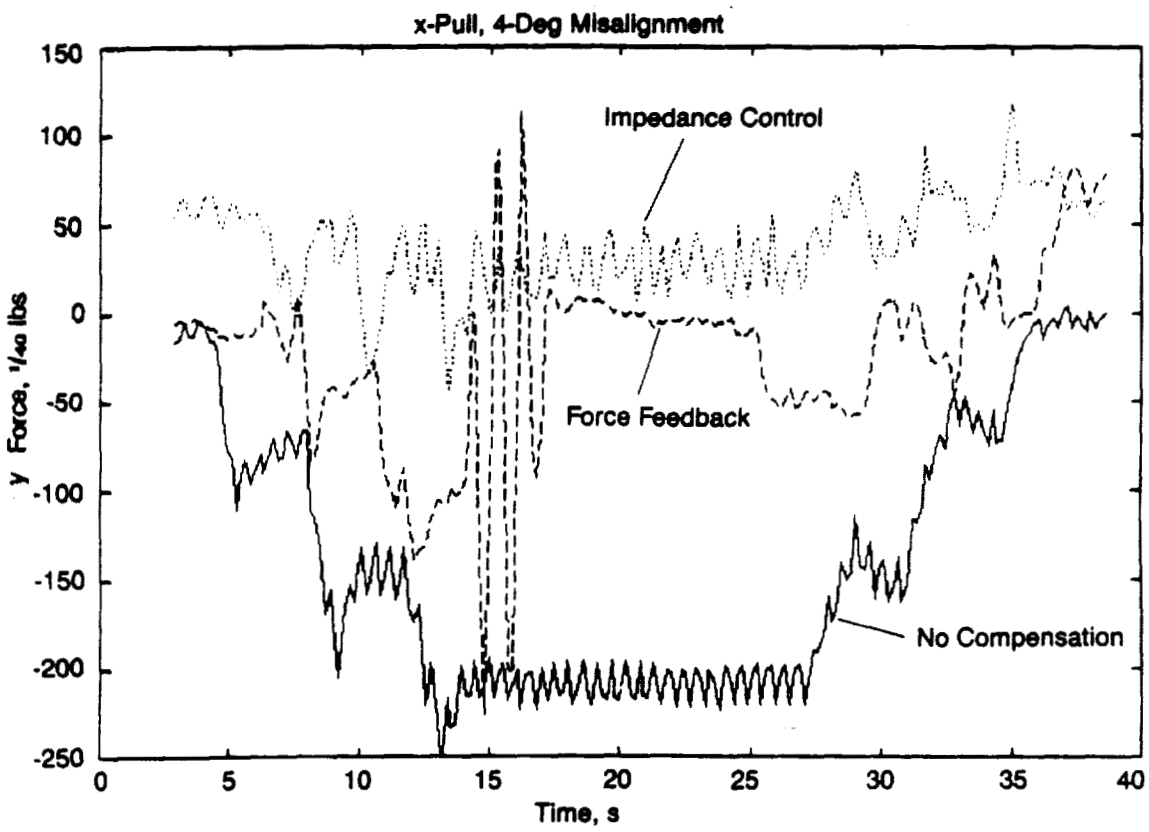

Figure 4. *Misaligned task experimental results.*

Because the manipulator itself is very stiff, the y position in the first trial is nearly constant. As a result, the task panel drawer must comply to compensate for the misalignment. The experimental parameters produce a steady state force in the y direction of more than 5 lbs at the maximum displacement. This force level is certainly more than is desirable. If this force level could be reduced by an order of magnitude by using some form of compliant control, the performance of this simple task would be much more acceptable.

The results of the second trial with force reflection were somewhat unexpected. By making the operator conscious of the force in the y direction, the operator is able to compensate for the forces by moving the hand controller in the opposite direction of the sensed force. The steady state force in the y direciton is reduced to less than 1 lb by using the force information in this way. However, the oscillations occurring in

the force profile at approximately 15 seconds into the trial produced forces equivalent to those observed in the first trial. These oscillations reflect the difficulty an operator has in stabilzing the system. A similar oscillation was observed in the y position profile. The only time delay in the system results from the computational requirements for the digital controller, so no stability problems were anticipated due to time delay. An initial response to these oscillations is to decrease the gain in the force reflection, but the operator loses "feel" for the task when this gain is reduced. Clearly there are additional dynamics in this system that need to be better understood.

In the third trial, the impedance control structure is seen to be as effective as the force reflection controller in reducing interaction forces. However, the impedance controller does not exhibit the oscillatory tendancies of the force reflection controller. Because of the difficulty in estimating the stiffness/damping parameters for the force reflection hand controller/human operator system, it is nearly impossible to choose parameters for the impedance controller to precisely emulate the dynamics of the hand controller. Instead, the impedance control parameters were selected to make tthe system fairly compliant, but viscous enough to maintain stability. Oscillatory behavior was observed when the stiffness and/or damping parameters in the filter were chosen to be to low. In fact, some combinations of impedance control parameters were seen to produce an oscillatory system with oscillations that were growing with time.

The similarity in performance between these two force control methods suggests further similarities in their dynamic models. In both cases, oscillatory behavior has been observed with certain parameters. Furthermore, this oscillatory behavior can be modified to produce acceptable system behavior by altering parameters within either controller. In the force reflection control system, the operator has difficulty stabilizing the system, even with small time delays. While in contact with rigid objects, this form of compliant control requires intense concentration and a fair amount of physical effort. The operator is able to stabilize the system by exerting more force on the hand controller to stop the oscillations. He is essentially modifying the dynamics of the force reflection controller to stabilize the system. He is certainly adding more stiffness to the system by exerting force on the hand controller, but our understandings of physical systems tell us that damping is also needed to damp out these oscillations. Similarly in the impedance control case, we have found that making the coefficient on the filter's damping term larger tends to stabilize the system. The trend observed by adding to the stiffness term is less clear, but it is clear that when the manipulator is stiffer than the environment there is no stability problem (although the manipulator will not comply in response to force inputs). Intuition also tells us that this situation is aggravated by adding time delay into the system.

3. MODELING AND ANALYSIS

The behavior of the bilateral force reflection and the impedance control observed in experimental tests was perplexing, since the prevalent theory behind the implementation did not suggest that stability could be a problem. However, the data suggested that the system could become unstable for certain combinations of programmed impedance and environmental conditions, or when the human operator was not "stiff" enough. This situation raised some important questions. Is the anamolous behavior inherent in the basic control technique, the implementation, or

both? Are there "safe areas" of operation which can be designed around? Are there other control techniques which are more suitable?

To gain a deeper understanding of the problem, a detailed investigation was initiated. The goals were to first understand the essential cause of the observed behavior, and then to build on this insight using more detailed models and more thorough experimental verification. The remainder of this paper describes the results obtained in the first phase of this investigation. The second phase is the subject of ongoing research.

Analysis of the observed behavior may seem a complex problem at first. The interaction of a six DOF robot with a task containing the various dynamics of the human and hand controller is a complex process indeed. A full dynamic model of this system would contain far too many parameters to lend any insight into its behavior. Such an approach is the undoing of many proposed manipulator control schemes in the literature--the essential benefits are masked by unjustified complexity/

The approach taken here, in contrast, seeks to discover the most fundamental models which can predict the observed behavior. Both the force reflection teleoperation and impedance control are considered using a single dynamic model. In either case, they act to process sensed forces and provide manipulator position commands. In the impedance control case, the position commands are related to the forces by a programmed filter. In the teleoperation case, the force/position relation is governed by the dynamics of the hand controller, human hand and arm. At the simplest level, both systems have the same model structure: a spring/damper/inertia combination. With respect to dynamic performance, these systems are essentially the same. We will refer to both cases as a compliance control system in the following discussion.

Since the performance objective can be thought of as assuring some desired behavior in each cartesian axis, including rotations about these axes, it would seem that satisfactory behavior in each axis would be a necessary condition for acceptable behavior overall. This intuitive principle provides motivation for the simple modeling and analysis below, where a single cartesian axis model is investigated in detail. To indicate the validity of the results obtained, experimental results of a full six DOF implementation along one axis are compared with the analysis. While experimental error prevented verifying exact correspondance, the trends predicted by the analysis were clearly verified by the hardware data. This experimental test is also discussed in detail below.

Before describing the details of the analytical results, it may be helpful to place the approach in context with others from the control literature. There seem to be two main approaches to specifying objectives for the control scheme. The first considers specific objectives on either position or force in a particular cartesian direction. Typical goals are zero steady state error in these individual quantities, or to minimize these errors in other senses. The basis of this approach relies on a separation of the six axes into "force control" and "position control" axes, which depend on the particular geometry of each task [4,5]. This approach is often called the "hybrid" control technique.

The second main approach considers the control objective to be a constraint on position and force in each cartesian direction. This constraint is often expressed as a desired mechanical impedance [2,6]. For example the constraint

$$F = Kx + B\frac{dx}{dt} + J\frac{d^2x}{dt^2}$$

would cause the robot and effector to behave as a spring of stiffness K, a damper of damping B, and an inertia of value J. The resulting impedance is expressed as

$$Z = K + Bs + Js^2$$

where s is the Laplace derivative operator. Actually, this view contains the hybrid approach as a special case, since small position errors are achieved by large stiffnesses, and force error zeroing can be achieved by zero stiffness and non-zero damping or inertia. For the case of teleoperation with force reflection, the human operator cannot provide wide ranges of impedances simultaneously in various directions, due to coupling in the arm and hand. Hence, this is more of an impedance control technique rather than a hybrid approach.

Another distinguishing feature of the different methods is the particular way the objective is implemented via feedback control. This is perhaps the most confusing issue in the field. We consider the impedance objective to have two main implementations. The first seeks to measure the cartesian position and orientation of the robot end effector, then command joint torques to supply the desired force according to the impedance constraint [2,5,6]. This is termed "torque based" impedance control, since the robot commands are in the form of torque. The second approach measures end effector forces and commands the robot cartesian position, again according the impedance objective. This is the "position based" approach to impedance control, since robot commands are in the form of positions [7,8,9]. Some suggested control schemes [3] differ slightly from these two main approaches, and some contain a mixture [2,6] of these ideas. However, this view captures the essential ideas behind the various approaches. Of course, force reflection teleoperation is necessarily a position based approach.

While there are many issues in the relative advantages of these methods when implemented via computer control, a key issue exploited here is that the joint control used to follow position commands also provides a large degree of joint dynamic decoupling. This greatly simplifies the control design task, since the heirarchical successive loop closure approach can be used. Hopefully, a more complete understanding of the limitations of this approach, together with other approaches, can be gained. Only then can rational choices be made between approaches and implementation details for particular applications. The analysis presented below yields some insight into the limitations of position based impedance control.

We consider the following physical situation. The manipulator base is attached to a common mounting with a task fixture. The end effector contains a six axis force sensor, which measures the forces and torques occuring at the contact point when the manipulator interacts with the task. The manipulator is under joint position control, and can be commanded to move according to cartesian reference commands by passing these commands through the inverse kinematic transformation to arrive at joint position commands. The actual cartesian position is available by passing the measured joint positions through the foreward kinematic transformation.

If the joint position control were perfect, and the kinematics were computed instantaneously, then the manipulator motion in each cartesian direction would be exactly as desired, and it would be decoupled from motion in all other cartesian axes. Practically, this behavior is approached at low frequencies, but degrades at higher frequencies. Thus we model the behavior of the manipulator in a particular cartesian direction as a positioning system with second order dynamics. This provides a basic model of the positioning fidelity as the frequency increases, but does not include coupling effects from other cartesian axes. As it turns out, the unstable behavior we wish to model occurs at low frequencies relative to those at which our model loses significant accuracy.

The impedance control is implemented in an outer feedback loop which measures interaction forces, passes these through an impedance specification filter, and updates the commanded cartesian position. Again, this models both the teleoperation and computer control implementations. The sensed foreces are dependent on the position of the contact point as well as the dynamic properties of the manipulator and task. For many tasks, their dominant character is represented by a pure stiffness, since it is often very large compared to any damping present in the task. Also, in the present case where the task is rigidly attached to the manipulator base frame, no inertial effects in the task are significant. The resulting model for the interconnected system is shown in block diagram form in Figure 5. The manipulator dynamics are parameterized by K_m, B_m , and J_m. The environmental (task) stiffness is K_e, and the desired impedance specification has stiffness K and damping B. X is the cartesian position along the axis in question, and F is the sensed interaction force. Note that if X accurately tracks the impedance update X_i, then the desired manipulator impedance will be achieved, ie. the constraint between F and X will be realized. This impedance is independent of the environmental impedance K_e, but the total impedance seen at the contact point is the sum of the manipulator and environmental impedance. This fact suggests that the system will be stable if the parameters are all positive [10]. The system should act like a connection of positive springs, masses and dampers.

However, the implementation of various kinematic transforms, rotations into the correct reference frame, etc. cause time delays in practical systems. Together with potentially large feedback gains due to small desired stiffness K and damping B, this time delay can cause instabilities in the overall system behavior. Due to the simplicity of our model, the precise relationship between the desired impedance, the environmental impedance, the time delay, and manipulator dynamics can be determined in order to retain stability.

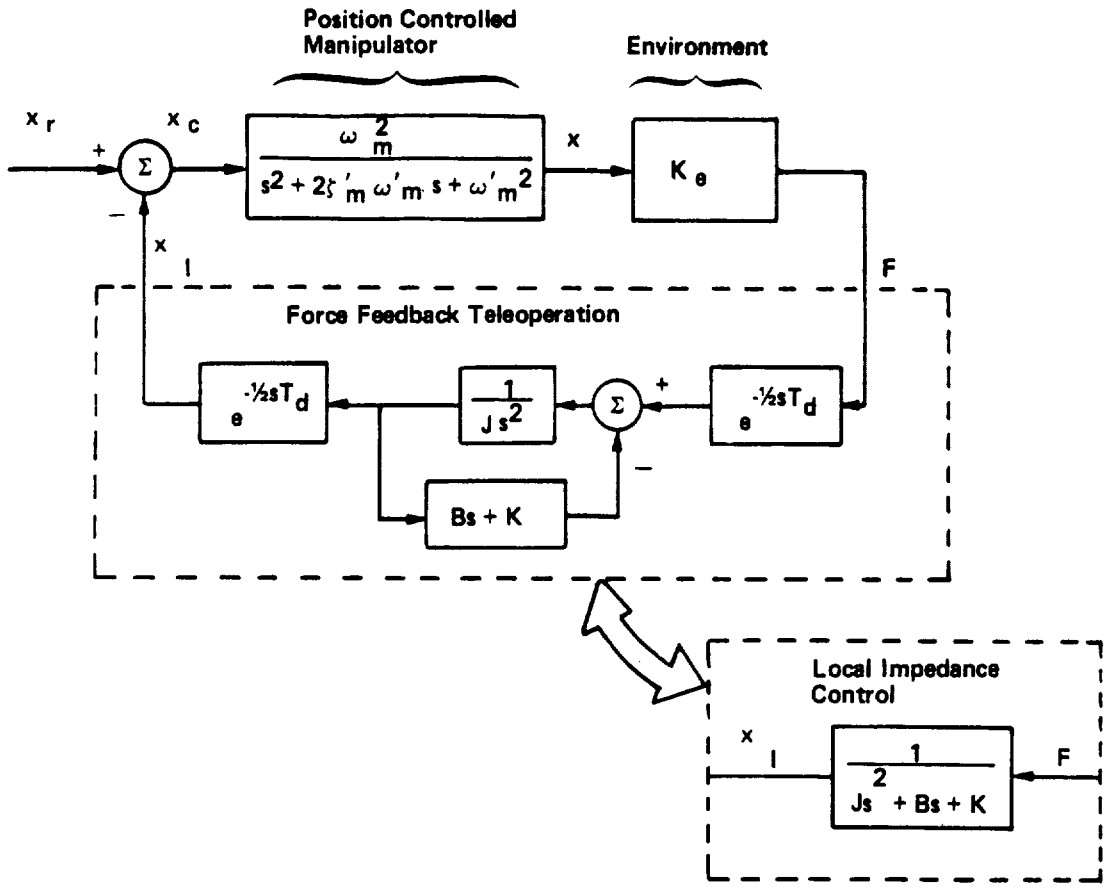

Figure 5. *Position Based Impedance Control Block Diagram.*

Since the system is infinite dimensional when time delays are present, gain and phase margins are used to determine the stability boundaries as parameters are varied. Based on the practical assumption that the manipulator dynamics are well damped, the open loop transfer function of the model in Figure 5, given by

$$G_{OL} = \frac{K_m K_e}{\left(J_m s^2 + B_m s + K_m + K_e\right)\left(Bs + K\right)}$$

can be shown to represent a stable closed loop system if and only if the phase margin is positive [9]. For a given set of manipulator dynamics parameterized by K_m, B_m, and J_m, and for a given environmental stiffness K_e, the time delay nT_s and desired impedance parameters K and B must satisfy both

$$K_m^2 K_e^2 = \left[\left(K_m + K_e - J_m\omega^2\right)^2 + B_m^2\omega^2\right]\left(K^2 + B^2\omega^2\right)$$

and

$$\pi = \tan^{-1}\left(\frac{B_m\omega}{K_m + K_e - J_m\omega^2}\right) + \tan^{-1}\left(\frac{B\omega}{K}\right) + \omega n T_s$$

for marginal stability of the closed loop system. This stability boundary in K and B is shown in Figure 6 for particular values of the other system parameters, and for various time delays nT_S. This figure also shows the stability boundary for a discrete time model of the impedance control loop. Both boundaries are quite close, except when B is very small. For further details on these results, see [9,11]. Observe that the region where both K and B are small is excluded for stable behavior. This restricts how "soft" the manipulator can be made to appear, ie., how small its impedance specification can be. Also, note that small K or small B can be achieved only if the other is relatively large. Finally, the larger the time delay, the larger K and B generally have to be to remain in the stable region. The implications of these stability results are discussed in detail in section 4.

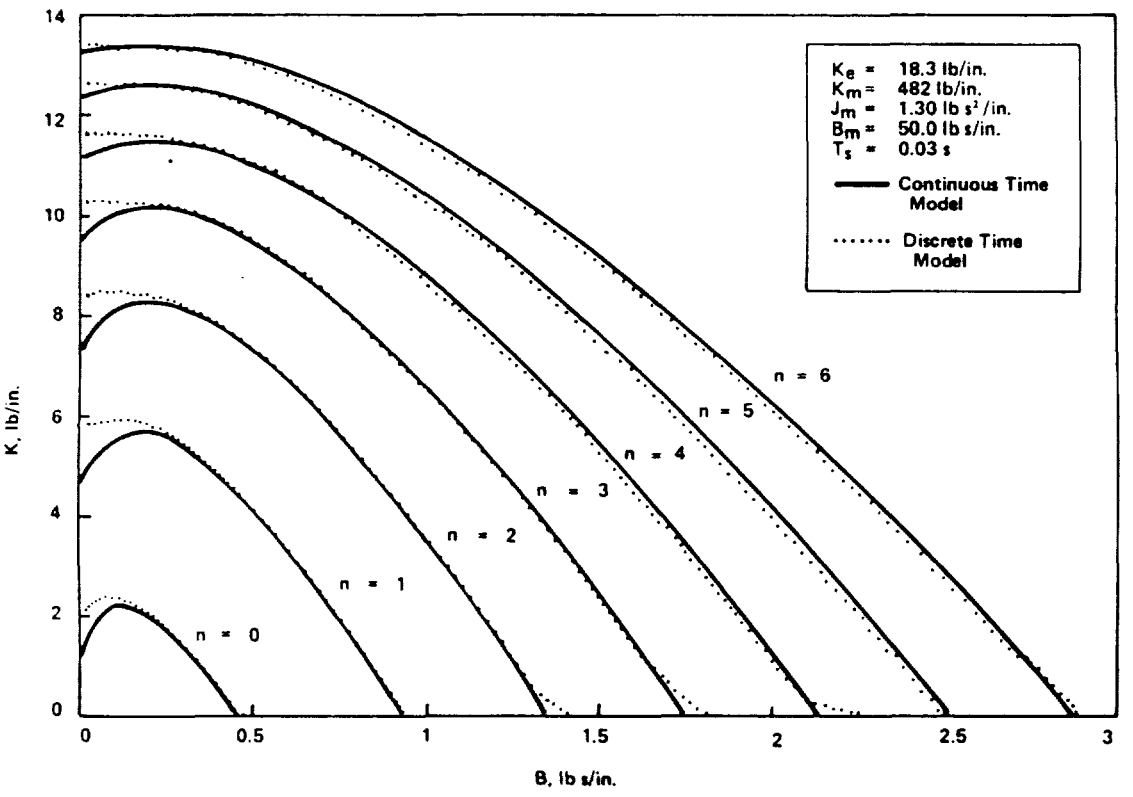

Figure 6. *Stability boundary in K and B for various time delays, nT_S.*

As an indication of the validity of the model and its prediction of the stability/instability boundary, consider the following comparison with an experimental determination of the boundary. For the test, the manipulator was programmed to have very large stiffness and damping in all cartesian directions but one. In these directions, the feedback gain from the force sensor to position update is essentially zero, and the stiff manipulator behavior is not modified. In the direction in question, however, various B and K values were used in the impedance specification block to find the values which caused unstable behavior. The task in this case consisted of a simple linear spring with known spring constant, as shown in Figure 7. The measured stability boundary is plotted in Figure 8, along with the theoretical boundary for the manipulator parameters and software time delay obtained from previous identification work. Here,

$$\omega_m = \sqrt{\frac{K_m + K_e}{J_m}}, \qquad \zeta_m = \frac{B_m}{2\sqrt{J_m\left(K_m + K_e\right)}}$$

The large measurement uncertainty bands are due to the presence of limit cycles near the stability boundary. Rather than a sharp division between growing oscillations and decaying oscillations, as the linear model above would predict, limit cycles of varying sizes were seen along the stability boundary. Outside this band, decaying and growing oscillations were observed. Thus, the overall trend predicted by the anlaysis is clearly observed, but close agreement in actual values was not.

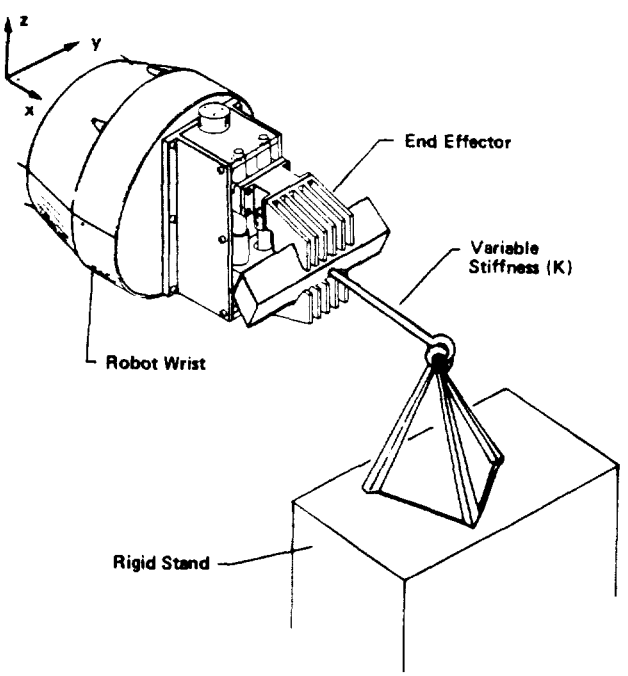

Figure 7. *Experimental verification test fixture.*

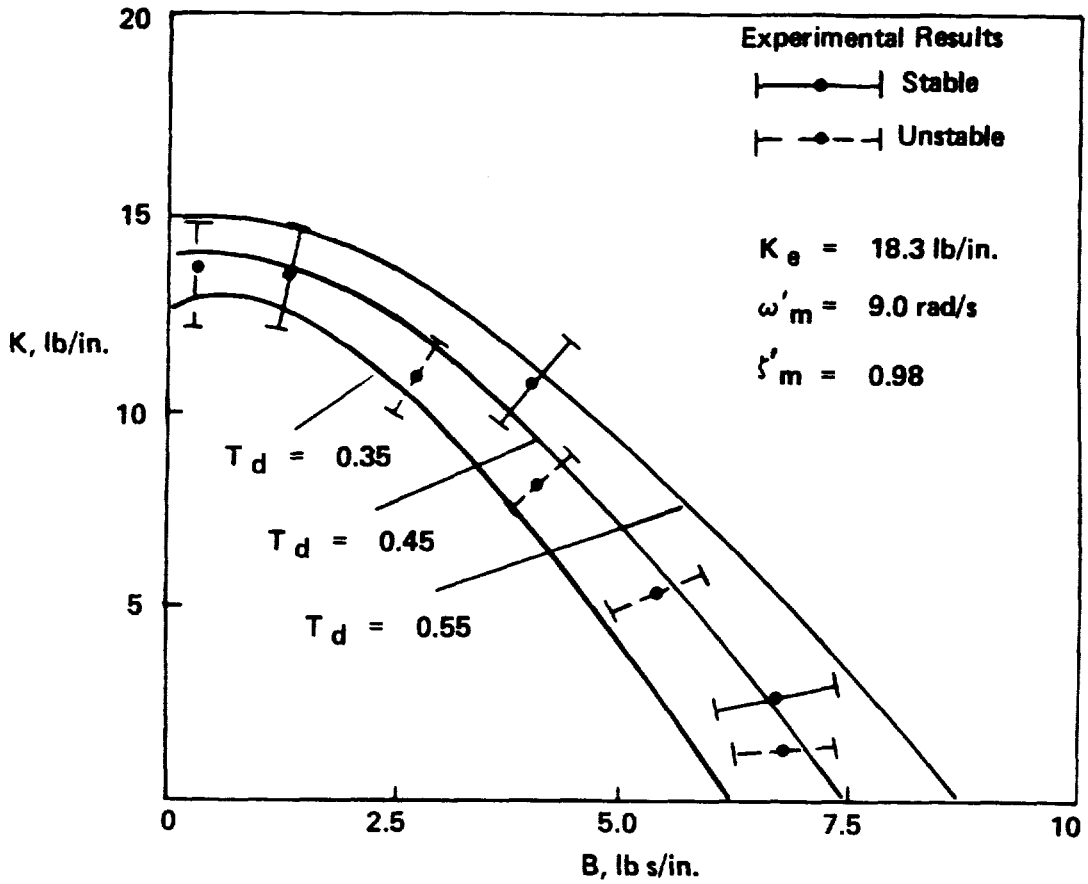

Figure 8. *Comparison of experimental and theoretical results.*

The essence of the problem is now clear---time delays and manipulator dynamics can cause undesired behavior, which prevents realization of very small manipulator impedances. More exact correspondence with measured data will depend on more detailed modeling, but the basic intuition has been established.

4. IMPLICATIONS FOR SPACE-BASED TELEROBOTS

One of the most desireable aspects of good bahavior during interaction between manipulator and environment is the reduction of contact forces. This provides a measure of safety in general, but also reduces distortion in components and disturbances to the overall system. Force disturbances may play a crutial role in space manipulation systems, particularly when supported by larger, more flexible platforms, such as the RMS manipulator.

If we consider the manipulator to have stiffness K and the environment (task) to have stiffness K_e along a particular cartesian direction, then the resulting force due to a change in the manipulator command position, x, is given by

$$F = \frac{KK_e}{K + K_e} x$$

This represents the force that would occur if the position of the task were not known precisely, and the command attempted to position the end effector inside the task surface. Note that when K is small compared to K_e, the resulting force is given approximately by

$$F \approx Kx$$

In fact, if $K < K_e/10$ then the resulting force is less than 1/11 of the force when the manipulator is perfectly stiff, ie. when $F = K_e X$. Thus, a usual objective for the control scheme is to require that K is small compared to the environmental stiffness in those directions where K_e is large. From Figure 6, stability of the system when this condition on K is imposed requires that the specified damping B lie near the K=0 intercept of the stability boundary. That is, relatively large values of damping are required. If other performance restrictions are imposed, such as the absense of overshoot in the response to surface contact, then even more damping is required. See [11] for more discussion of performance issues.

Even if static forces are sufficiently reduced by specifying small K, dynamic forces due to motion can cause large transient forces when B is large. In the case where the specified manipulator impedance is Bs + K, the force at the contact point is given by

$$F = K_e \, x \, \frac{(Bs + K)}{Bs + K + K_e}$$

If K_e is large compared to K, and large compared to Bs up to some maximum frequency of interest, then this is given approximately by

$$F \approx (Bs + K)x$$

From the stability analysis results for the case where K_e = 5 lb./in., and K = 0.5 lb./in., and the time delay is 200 ms a reasonable value for B would be 2 lb. sec./in. Given a position profile X(t), the resulting force at the contact point can be computed using the approximate relation above.

The full effect of large damping values can be more easily seen in the following example. As in the experimental tests of section 2, let the manipulator extract a drawer from a fixture along some direction which is slightly different from the nominal direction given by the task geometry. Figure 9 shows a typical smooth position trajectory in the pull direction x. The misalignment causes a similar position trajectory in the y direction, which is interpreted as a position error with respect to the task geometry. Due to the small alignment error, the y position only changes 1 inch, while the drawer is pulled 1 foot in the x direction. The forces due to this 1 inch position error are shown in Figure 10 for three manipulator impedances. The first represents the case where no control compensation is present. There, the force is simply K_e times the position error. The second case represents the ideal case where the manipulator is programmed to behave as a pure stiffness K. Since K is 1/10 the size of K_e, the force is approximately given by K times the position error. Note the order of magnitude reduction in force compared to the uncompensated case. The third case represents the practical situation where significant damping is also required to retain stability. While static forces are the same as in the ideal (stiffness only) case, the transient forces exceed those of even the uncompensated case.

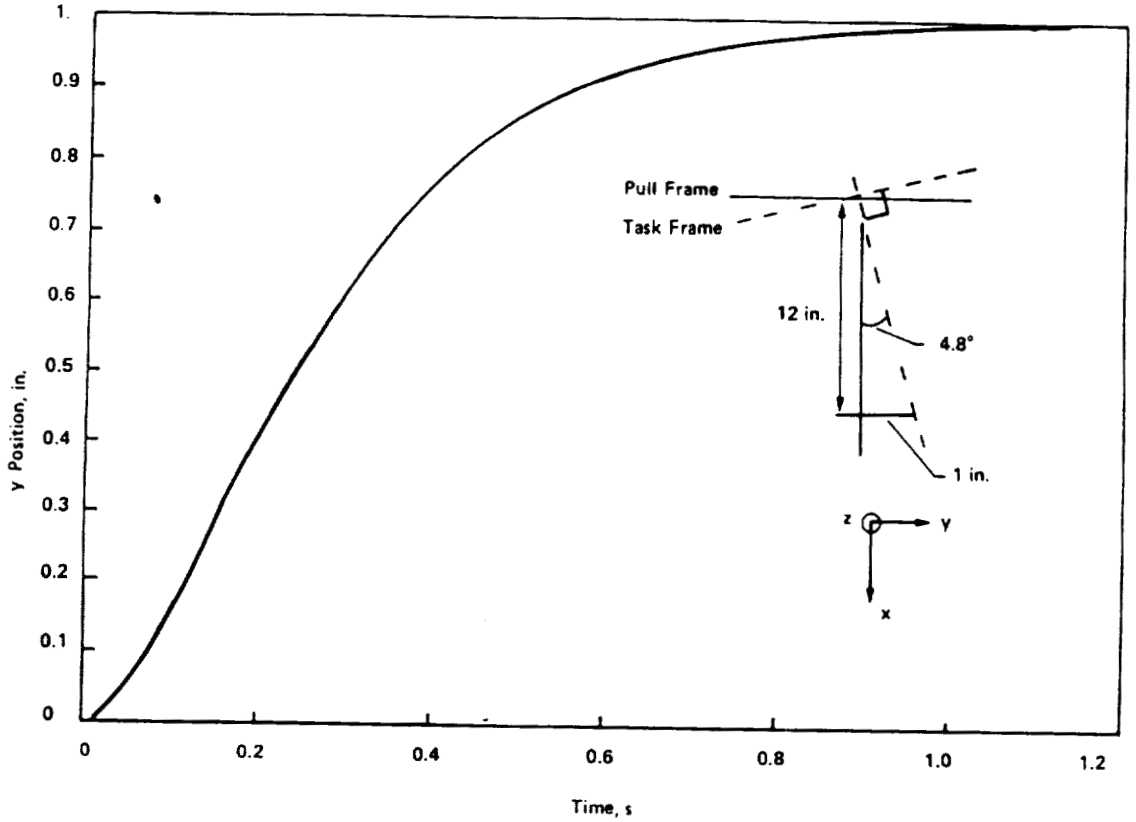

Figure 9. *Uncompensated y position, misaligned pull.*

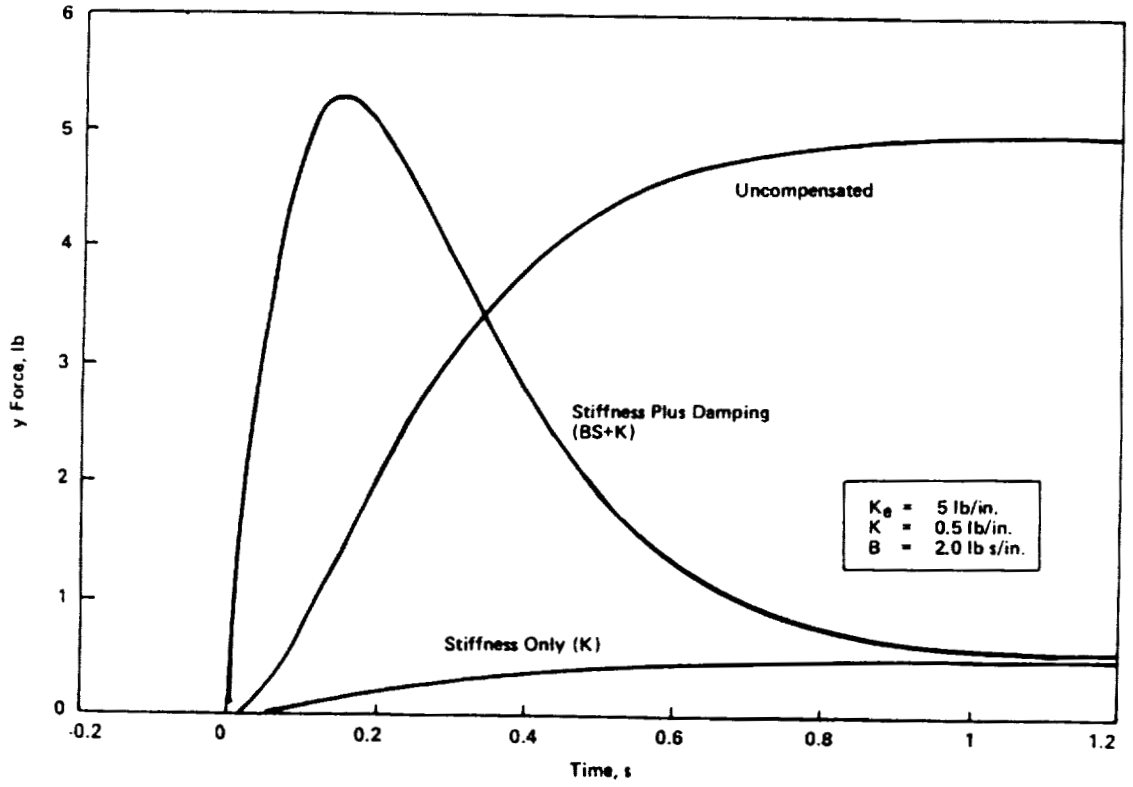

Figure 10. *Force versus time, for three manipulator impedances.*

Since the transient forces are proportional to the speed of the motion, these forces can be reduced by slowing the motion. Hence, given a desired level of force reduction compared to the uncompensated case, the stability constraint can be viewed as imposing limitations on speed of task execution. This is the essential difficulty with large amounts of damping in the impedance specification when the control is implemented via computer.

When implemented via force reflection teleoperation, other implications of large amounts of damping appear. There are two ways of supplying the required damping at the hand controller. The most obvious is to require the human operator to supply it. Alternatively, feedback control can be implemented local to the hand controller to add damping. In the first case, large amounts of damping are fatiguing because the operator must constantly keep muscles tensed, and concentation must not lapse. The difficulty involved was indicated by the experimental data and discussion in Section 2. In the second case, any motion not due to sensed interacition forces must be supplied by the operator in opposition to the hand controller damping. This can also be quite fatiguing if any prolonged motion is required. For example, the 2 lb. sec/in. level requires the exertion of 2 pounds of force in order to move the end effector at a speed of 1 in./sec. Practically, if motion is required when no environmental contact is made, this damping should be reduced or removed. The emphasis is then placed on some mode switching technique which depends on the detection of contact, proximity sensing, etc. One operational difficulty with hand controller damping is that surface contact can be difficult to "feel", since forces on the hand are not primarily dependent on contact forces. Clearly, many of these issues will require more extensive study, testing, and operator evaluation.

One final implication of the results presented above concerns the source of time delay in the control loop. An advantage in this respect can be obtained by implementing impedance control in computers local to the manipulator. Since the command updates depend on forces in simple ways, safety and error checking can be relatively fast. Also, communication delays can be reduced to insignificant levels. However, the use of teleoperation implies closure of the control loop via a remote control station. Communication delays, additional hand controller kinematic computations, mechanical properties of the hand controller, and relatively unpredictable operator reactions which require extensive safety monitoring all contribute to increasing time delays. These translate into increasing limitations of the control scheme as discussed above. What is obviously needed is a battery of laboratory tests using space--realistic manipulators, hand controllers, and functional tasks to determine the relative advantages of various control methods and implementation details. The results presented here represent initial data on a specific class of control approaches, and should be considered only as a basis on which to build.

REFERENCES

[1] Hill, J. W., Study to Design and Develop Remote Manipulator Systems, Quarterly Reports 5 and 6, Stanford Reserach Institute, January 1977.

[2] Hogan, N., "Impedance Control: An Approach to Manipulation," ASME Journal of Dynamic Systems, Measurement and Control, March, 1985, pp 1-24.

[3] Whitney, D. E., "Force Feedback Control of Manipulator Fine Motions," ASME Journal of Dynamic Systems, Measurement and Control, June, 1977, pp 91-97.

[4] Mason, M. T., "Complinance and Force Control For Computer Controlled Manipulators," IEEE Transacations on Systems, Man and Cybernetics, June, 1981, pp 418-432.

[5] Raibert, M. H., and Craig, J. J., "Hybrid Position/Force Control of Manipulators," ASME Journal of Dynamic Systems, Measurement and Control, June, 1981, pp 126-133.

[6] Salisbury, K. J., "Active Stiffness Control of a Manipulator in Cartesian Coordinates," Proceedings 1980 Conference on Decision and Control, December, 1980, pp 95-100.

[7] Maples, J. A. and Becker, J. J., "Experiments in Force Control of Robotic Manipulators," Proceedings IEEE International Conference on Robotics and Automation, April 1986, pp 695-702.

[8] Septien, T. M., et al, "Control of Tool/Workpiece Contact Force with Application to Robotic Deburring," IEEE Journal of Robotics and Automation, Vol RA-3, No. 1, February, 1987, pp 7-18.

[9] Lawrence, D. A. and Stoughton, R. M., "Position-Based Impedance Control: Achieving Stability in Practice," to appear Proceedings AIAA Conference on Guidance, Navigation, and Control, August, 1987.

[10] Kazerooni, H., Sheridan, T. B., and Houpt, P. K., "Robust Compliant Motion for Manipulators, " IEEE Journal of Robotics and Automation, Vol. RA-2, No. 2, June 1986, pp 83-92.

[11] Chapel, J. D. and Lawrence, D. A., "Stability Analysis For Alternative Force Control Schemes as Applied to Remote Space Teleoperation," Proceedings, 10th Annual AAS Guidance and Control Conference, January, 1987.