N89-24663

Part II

APPLICATION OF FINITE-ELEMENT METHODS TO DYNAMIC ANALYSIS OF FLEXIBLE SPATIAL AND CO-PLANAR LINKAGE SYSTEMS

Steven Dubowsky

The following figures describe an approach to modeling the flexibility effects in spatial mechanisms and manipulator systems. The method is based on finite-element representations of the individual links in the system. However, it should be noted that conventional FEM methods and software packages will not handle the highly nonlinear dynamic behavior of these systems which result from their changing geometry. In order to design high-performance lightweight systems and their control systems, good models of their dynamic behavior which include the effects of flexibility are required.

FOCUS

- **DEVELOP PRACTICAL AND EFFICIENT METHODS WHICH ANALYZE SPATIAL MECHANISMS AND MANIPULATORS CONTAINING IRREGULARLY SHAPED FLEXIBLE LINKS**

The method presented here for the modeling of the dynamic behavior of manipulators and machine systems with flexibility is based on using individual finite-element link models to reduce the number of dynamic degrees of freedom. The system gross motion is modeled using 4 by 4 matrix methods. The resulting equations of motion contain both the full nonlinear behavior introduced by the system's gross motion and the effects of link flexibility.

ANALYTICAL APPROACH

- **4 x 4 MATRIX DYNAMIC ANALYSIS TECHNIQUES**
  - **WELL-ESTABLISHED METHOD**
  - **APPLIED TO RIGID LINK SYSTEMS IN PREVIOUS WORK**
  - **POSSIBLE TO EXTEND ANALYSIS TO INCLUDE FLEXIBILITY OF LINKS**
- **FINITE-ELEMENT METHODOLOGY**
  - **USED EXTENSIVELY IN STRUCTURAL DYNAMICS**
  - **STANDARD FINITE-ELEMENT PROGRAMS (NASTRAN, SAP, ETC) ARE WIDELY AVAILABLE**
- **PERTURBATION COORDINATES**
- **COMPONENT MODE SYNTHESIS COORDINATE REDUCTION**

This figure defines the well-known 4 by 4 coordinate transformation. These transformations contain the information that describes the kinematic constraints imposed by the systems joints or connections.

4 x 4 MATRIX NOTATION

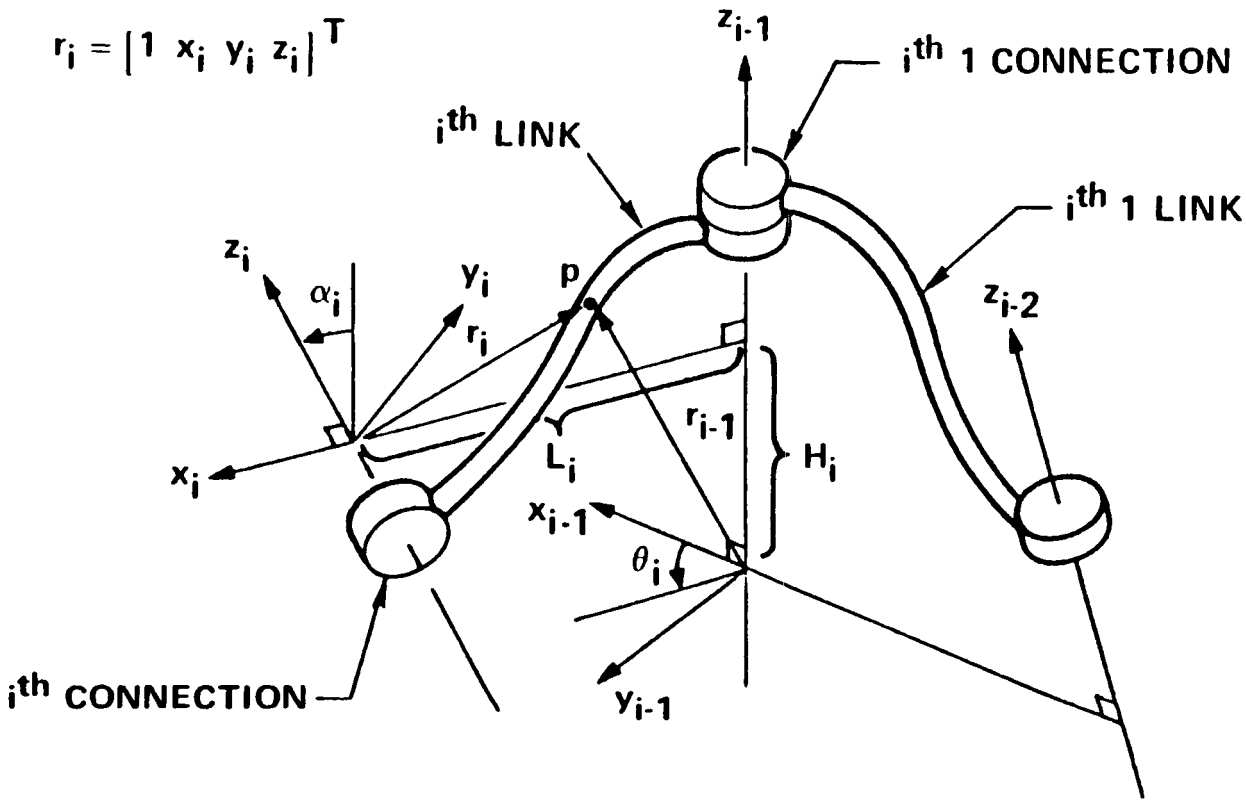

The vectors representing any point in the system can be represented to a common frame using 4 by 4 methods. In particular, the inertial position of any point can be described.

4 x 4 MATRIX ANALYSIS

$$r_{i-1} = T^{i}_{i-1} r_i$$

$$T^{i}_{i-1} = \begin{bmatrix} 1 & 0 & 0 & 0 \\ L_i \cos\theta_i & \cos\theta_i & -\sin\theta_i \cos a_i & \sin\theta_i \sin a_i \\ L_i \sin\theta_i & \sin\theta_i & \cos\theta_i \cos a_i & -\cos\theta_i \sin a_i \\ H_i & 0 & \sin a_i & \cos a_i \end{bmatrix}$$

$$\overset{0}{r_i} = T^1_0 T^2_1 T^3_2 \; . \; . \; . \; T^i_{i-1} r_i = T^i_0 r_i$$

The position variables of the finite-element grid points must be transformed into 4 by 4 notation.

LOCAL GRID POINT MOTION

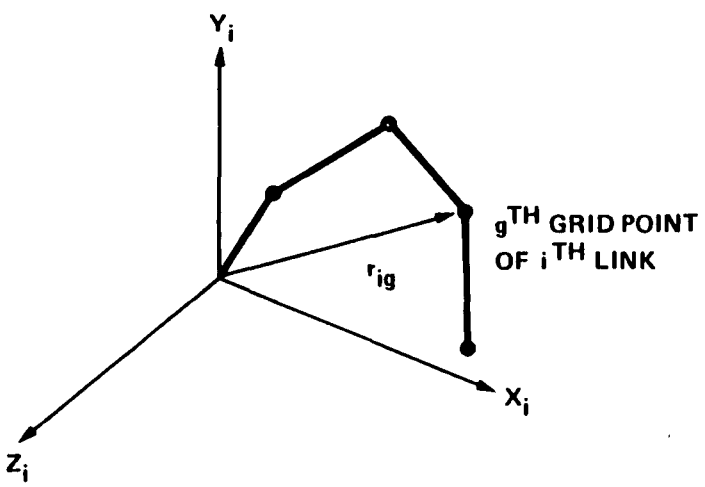

LOCAL POSITION:

$$r_{ig} = \sum_{\beta=1}^{NP(i)} \Phi_{ig\beta}\, p_{i\beta} + b_{ig}$$

NOMINAL POSITION:

$$b_{ig} = [1 \;\; x_{ig}\; y_{ig}\; z_{ig}]^T$$

SELECTION VECTOR:

$$\Phi_{ig\beta} = [0\,1\,0\,0]^T \text{ for } \beta = 1 + 6(g-1)$$
$$= [0\,0\,1\,0]^T \text{ for } \beta = 2 + 6(g-1)$$
$$= [0\,0\,0\,1]^T \text{ for } \beta = 3 + 6(g-1)$$
$$= [0\,0\,0\,0]^T \text{ for all other } \beta$$

The inertial velocities of the grid points are calculated in 4 by 4 notation so that the kinetic energy (next figure) required by Lagrange's Equations (following figure) can be formulated.

GRID POINT INERTIAL VELOCITY

- **INERTIAL POSITION:**

$$r^{o}_{ig} = T^{i}_{o}\, r_{ig}$$

- **INERTIAL VELOCITY:**

$$v_{ig} = \sum_{j=1}^{i} U_{ij}\, r_{ig}\, \dot{\theta}_j + T^{i}_{o}\, \dot{r}_{ig}$$

$$\text{WHERE} \quad U_{ij} = \frac{\partial T^{i}_{o}}{\partial \theta^{i}_{j}}$$

LINK ENERGY

- KINETIC ENERGY

$$T_i = \sum_{g=1}^{NG(i)} T_{ig} = \sum_{g=1}^{NG(i)} \frac{1}{2} m_{ig} \, Tr(v_{ig} \, v_{ig}^T)$$

- POTENTIAL ENERGY (ELASTIC)

$$V_i = \frac{1}{2} p_i^T \left[\tilde{k}_i\right] p_i = \sum_{\beta=1}^{NP(i)} \sum_{\gamma=1}^{NP(i)} \tilde{k}_{i\beta\gamma} \, p_{i\beta} \, p_{i\gamma}$$

LINK DYNAMIC EQUATIONS

- LAGRANGE'S EQUATIONS

$$\frac{d}{dt}\left[\frac{\partial(T_i)}{\partial \dot{p}_{ia}}\right] - \frac{\partial(T_i)}{\partial p_{ia}} + \frac{\partial(V_i)}{\partial p_{ia}} = \tilde{f}_{ia} \qquad a = 1, \ldots, NP(i)$$

- LINK DYNAMIC EQUATIONS

$$m_i \ddot{p}_i + g_i \dot{p}_i + k_i p_i = f_i$$

The number of degrees of freedom for each link is reduced using component mode synthesis in order to achieve good computational efficiency.

COMPONENT MODE SYNTHESIS

- **CMS TRANSFORMATION**

$$p_i = \begin{bmatrix} p_i^I \\ \hline p_i^F \end{bmatrix} = \left[\begin{array}{c|c} I & 0 \\ \hline \Phi_c & \Phi \end{array}\right] \begin{bmatrix} p_i^I \\ \hline \eta_i \end{bmatrix} = A_i\, a_i$$

- **REDUCED LINK DYNAMIC EQUATIONS**

$$M_i \ddot{a}_i + G_i \dot{a}_i + K_i a_i = f_i^a$$

The link dynamic equations are formulated in terms of selected global coordinates.

GLOBAL EQUATIONS OF MOTION

- **GLOBAL TRANSFORMATION**

$$a_i = B_i(\theta(t))\, q$$

- **GLOBAL DYNAMIC EQUATIONS**

$$M(\theta)\ddot{q} + G(\theta,\dot{\theta})\dot{q} + K(\theta,\dot{\theta},\ddot{\theta})\, q = Q(\theta,\dot{\theta},\ddot{\theta},t)$$

This method has been automated in a software package called SALEM (Spatial Analysis of Linkages with Elastic Members).

SALEM ANALYSIS PROCEDURE

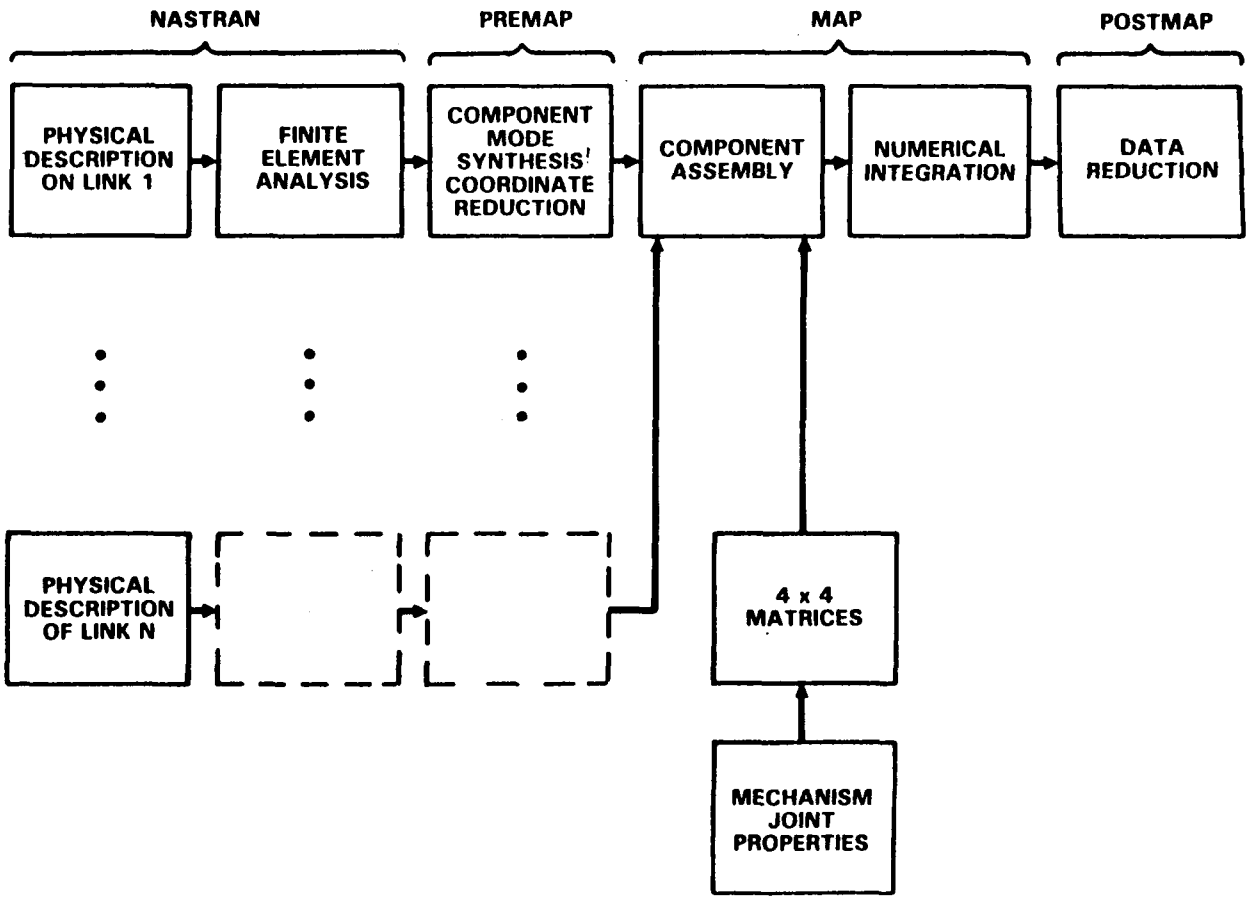

A special version, tailored for robotic manipulators, has also been created. This package is called FLEXARM (FLEXible Analysis of Robotic Manipulators). These programs include computer graphics output capabilities to assist the designer in visualizing, and hence, understanding the complex three-dimensional dynamic behavior of these systems. This figure shows the FLEXARM computational structure.

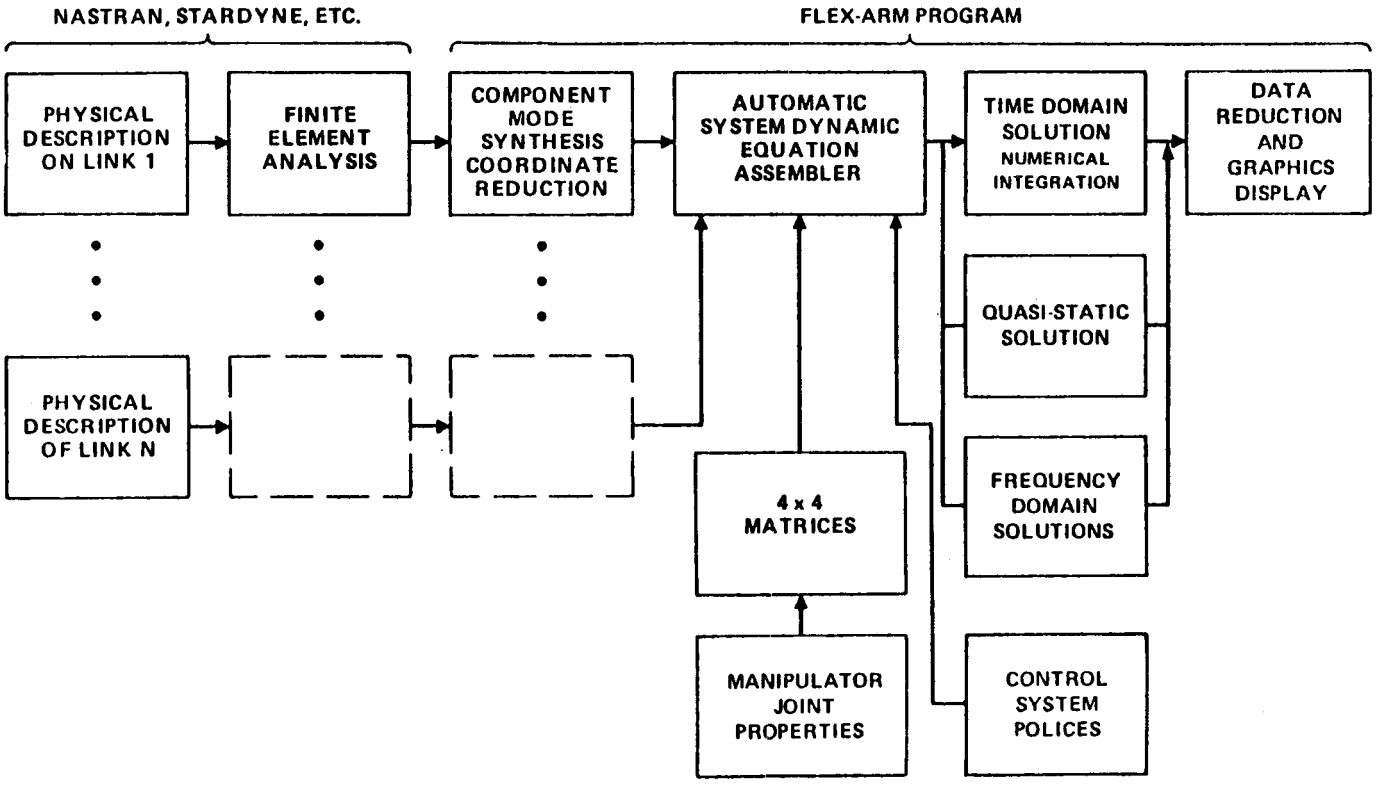

Examples of the results which may be obtained using this technique are presented. First, a machine system will be considered and then results for a robotic manipulator will be presented.

This figure shows a co-planar mechanism. Even though its kinematic structure is planar, it will exhibit spatial vibrations because of the off-sets in the links.

CO-PLANAR MECHANISM

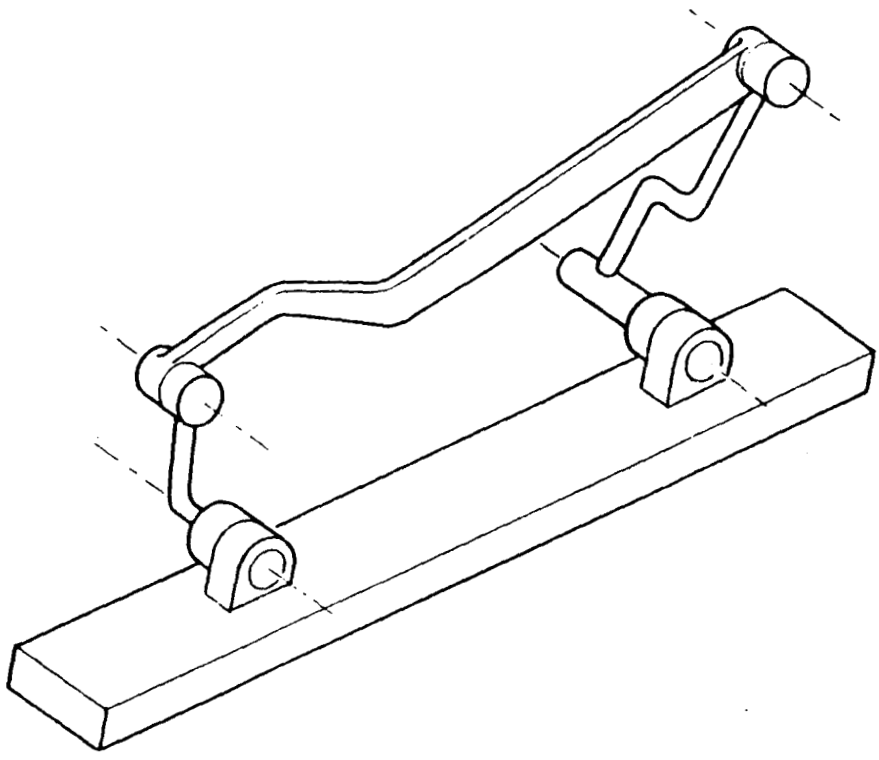

This figure shows the details of the FEM model for the coupler link.

OFFSET COUPLER FINITE-ELEMENT MODEL

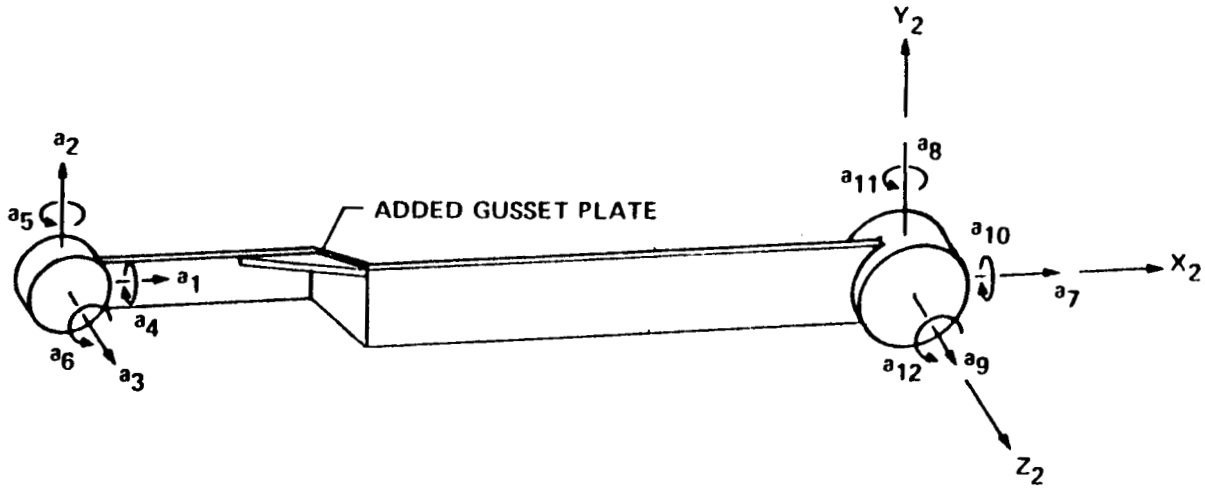

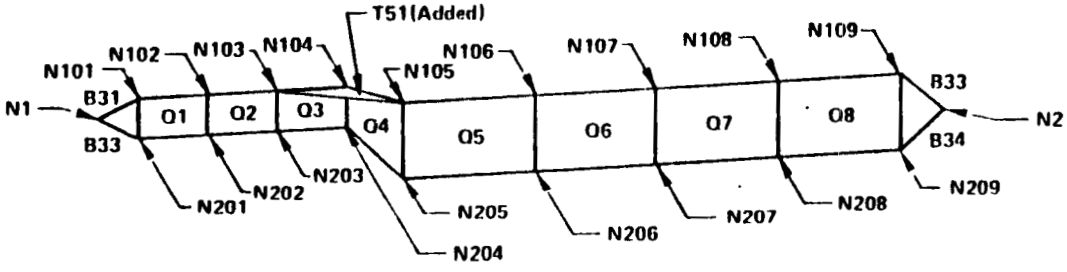

This is a typical plot of the displacements on the coupler link.

OUT-OF-PLANE DEFLECTION OF LINK

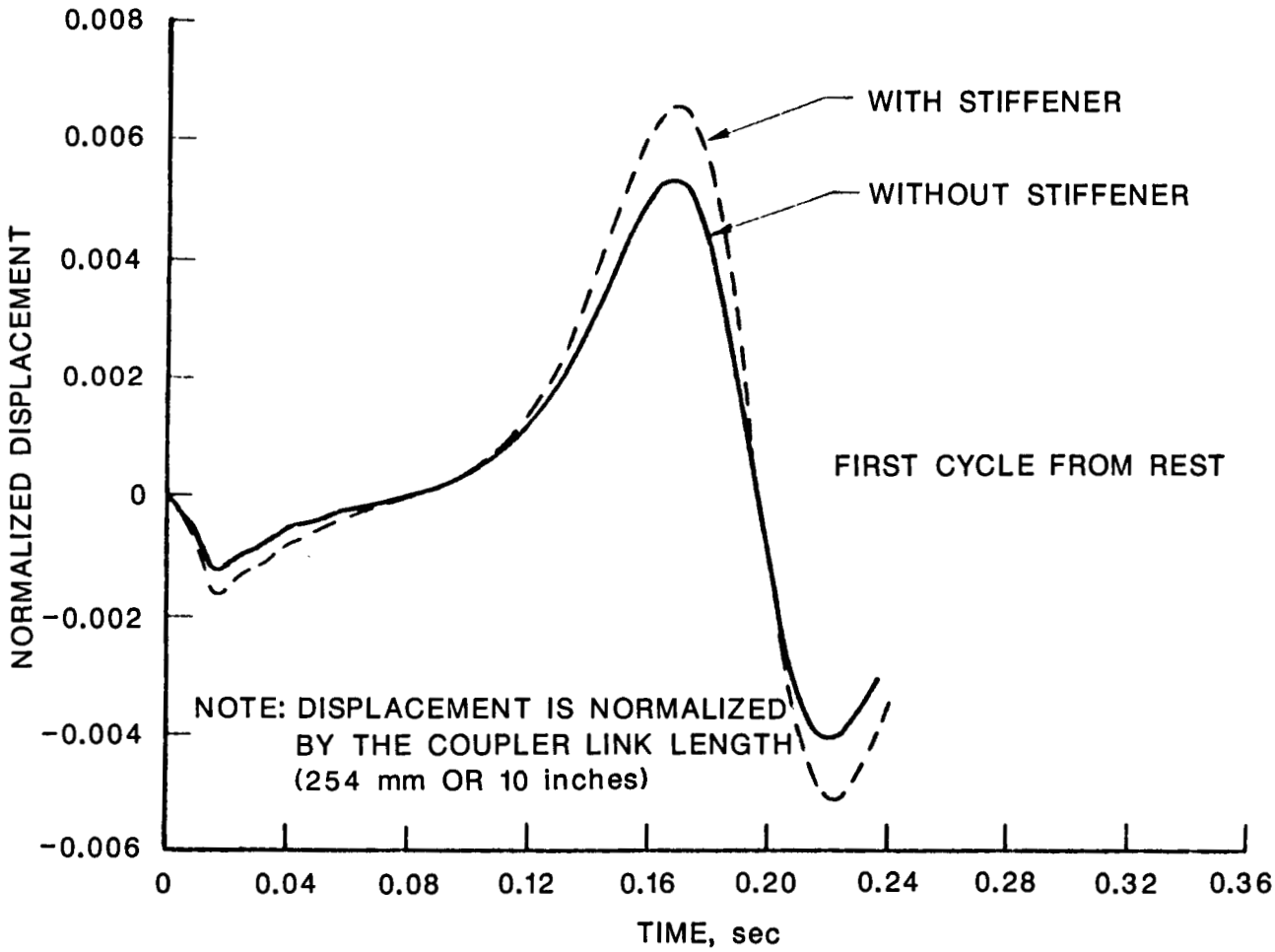

The global coordinates of the mechanism are presented here.

CO-PLANAR FOUR BAR LINKAGE

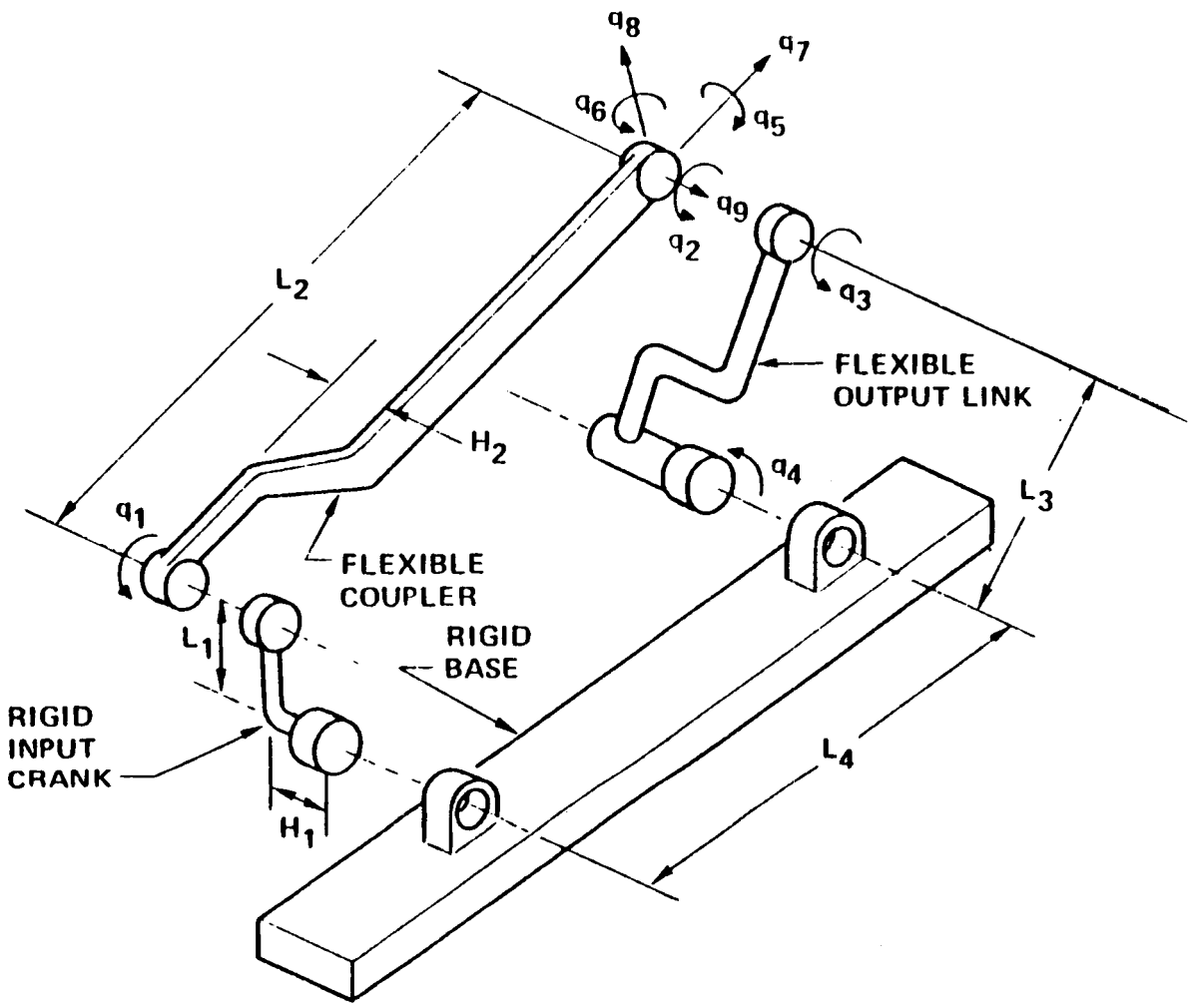

This figure shows different views of the deformation of the mechanism in one of its positions. This type of plot can be overlayed to create animated motions of the mechanisms motion.

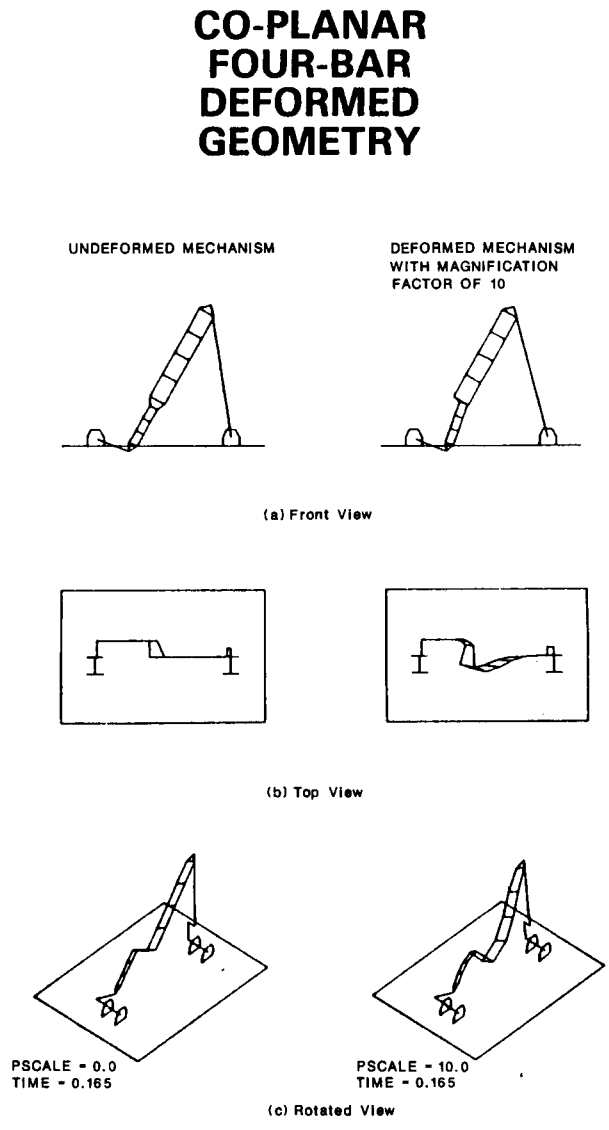

CONCLUSIONS

- A UNIFIED ANALYTICAL APPROACH FOR BOTH RIGID AND ELASTIC LINK MECHANISMS IS POSSIBLE
- EXISTING FINITE-ELEMENT PROCESSING PROGRAMS CAN BE FULLY UTILIZED TO REDUCE GEOMETRIC MODELING COMPLEXITY
- COMPONENT MODE SYNTHESIS COORDINATE REDUCTION IS IDEAL FOR USE IN FLEXIBLE LINKAGE ANALYSIS
- INCREASED UNDERSTANDING OF 3D BEHAVIOR CAN BE OBTAINED THROUGH INTERACTIVE GRAPHICS

Part III

Shown below is an an example of the application of the method to a robotic manipulator: the Cincinnati MILACRON T3R3.

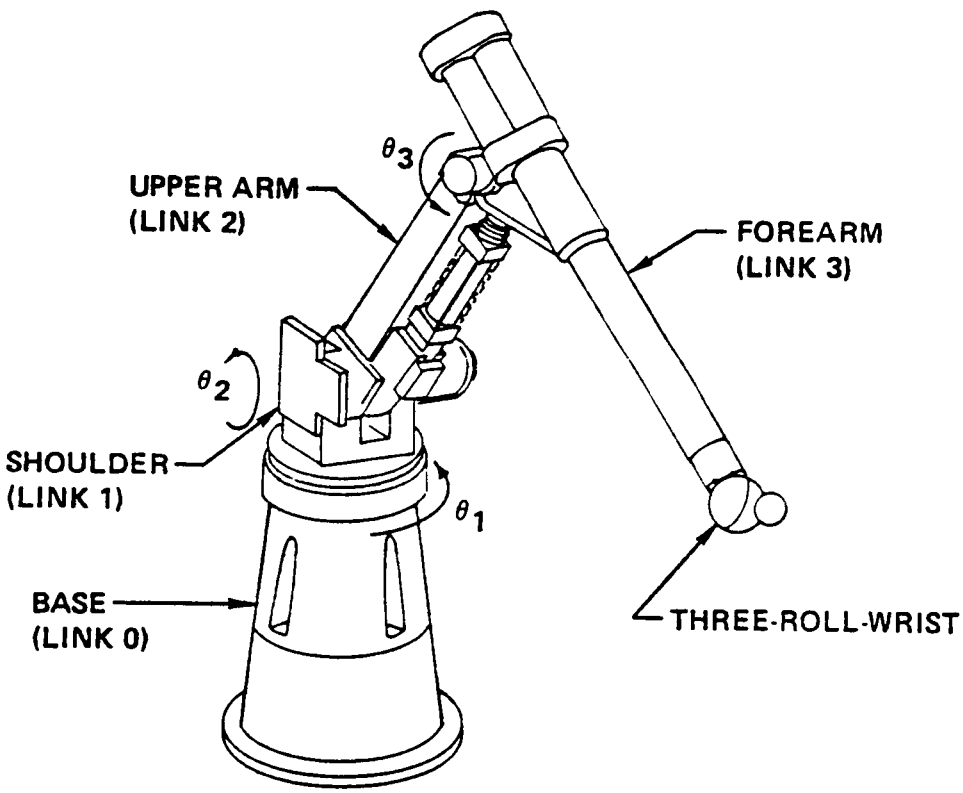

The first step in the method is to develop a standard NASTRAN FEM model for each link in the manipulator, including its base and the floor. The forearm model is shown below. The model includes such important parameters as the stiffness of the manipulators bearings.

```
ENTER COMMAND: .
LIST S
MODEL STATUS:
UPPER ARM
TOTAL CPU USED -     0.897 SECONDS

  1 COORDINATE SYSTEMS
 44 GRIDS      2001 TO     2622
 75 ELEMENTS       2001 TO     2618

  0 CONM2          0 TO        0
 22 CBAR       2301 TO     2368
  0 CELAS2         0 TO        0
 28 CTRIA3     2101 TO     2618
 25 CQUAD4     2001 TO     2504
  0 CTETRA         0 TO        0
  0 CPENTA         0 TO        0
  0 CHEXA          0 TO        0

ENTER COMMAND:
```

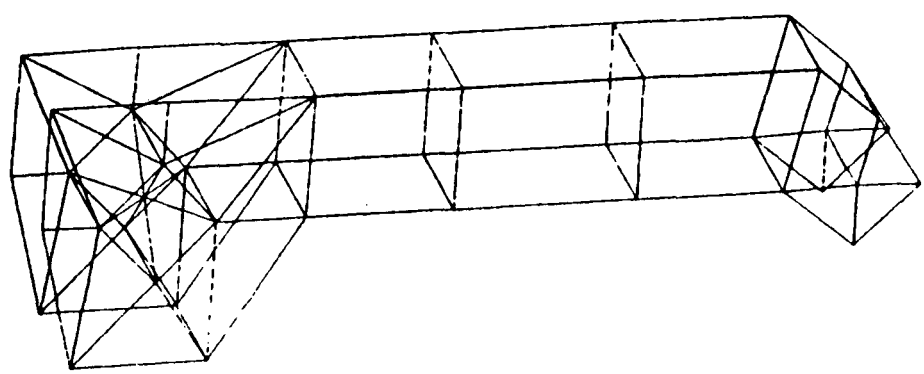

UPPER ARM

In this figure the other NASTRAN models of the other links are shown. They have 155 grid points and 273 elements. With the degrees of freedom associated with the control systems, this unreduced system would have approximately 1650 DOF's. The computational cost required to simulate this large nonlinear system would be very high. However, the results obtained show that the structural degrees of freedom can be effectively reduced by CMS, and a total system model of less than 72 DOF's will yield high-quality results.

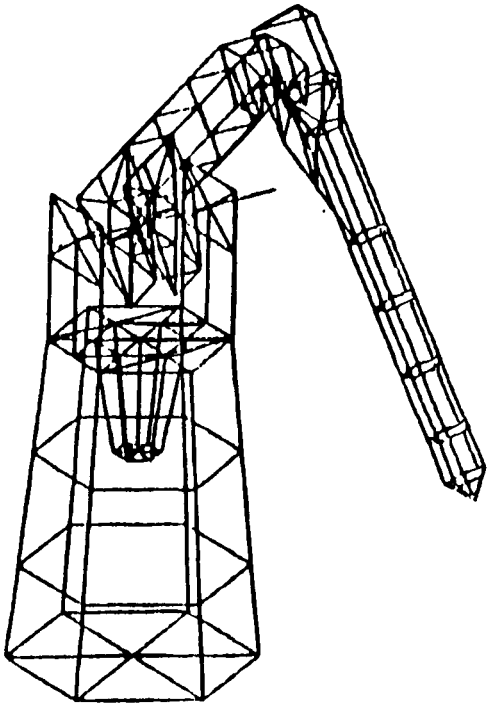

Complete Model

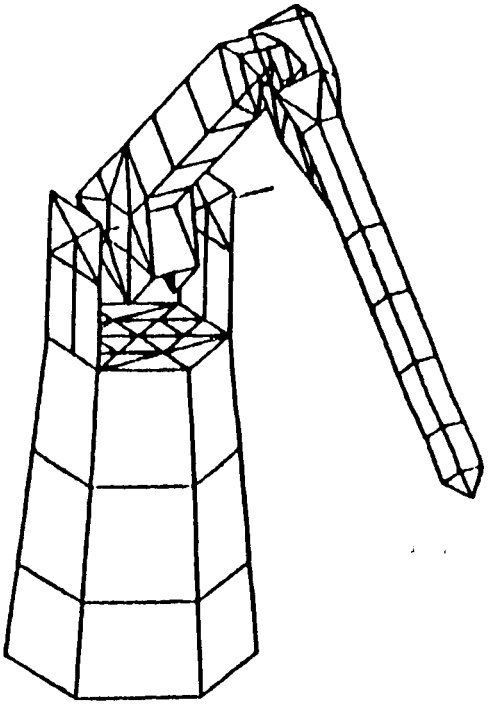

Model with Hidden Lines Removed

Detailed System NASTRAN Finite-element of Robotic Manipulator

An example of the typical control for one of the T3R3 axis is shown here.

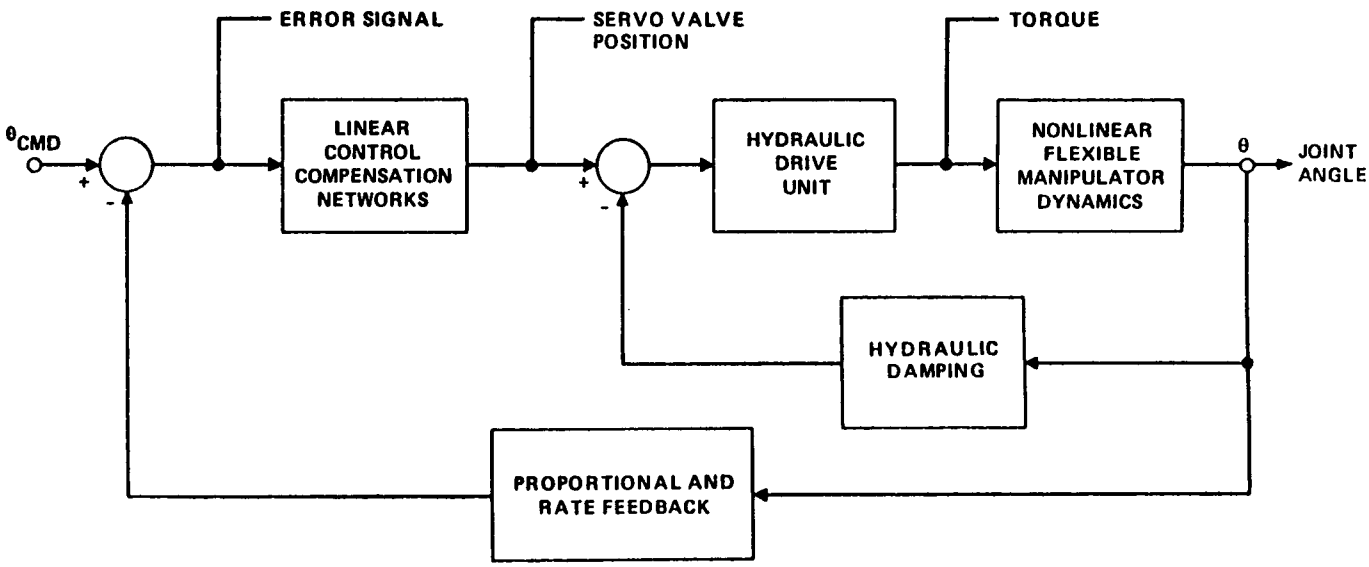

Frequency response experiments for the manipulator in a number of stationary positions show good agreement with the FLEXARM results. It should be noted that when the manipulator is nominally stationary, its equations are nearly linear and classical frequency response analysis is meaningful.

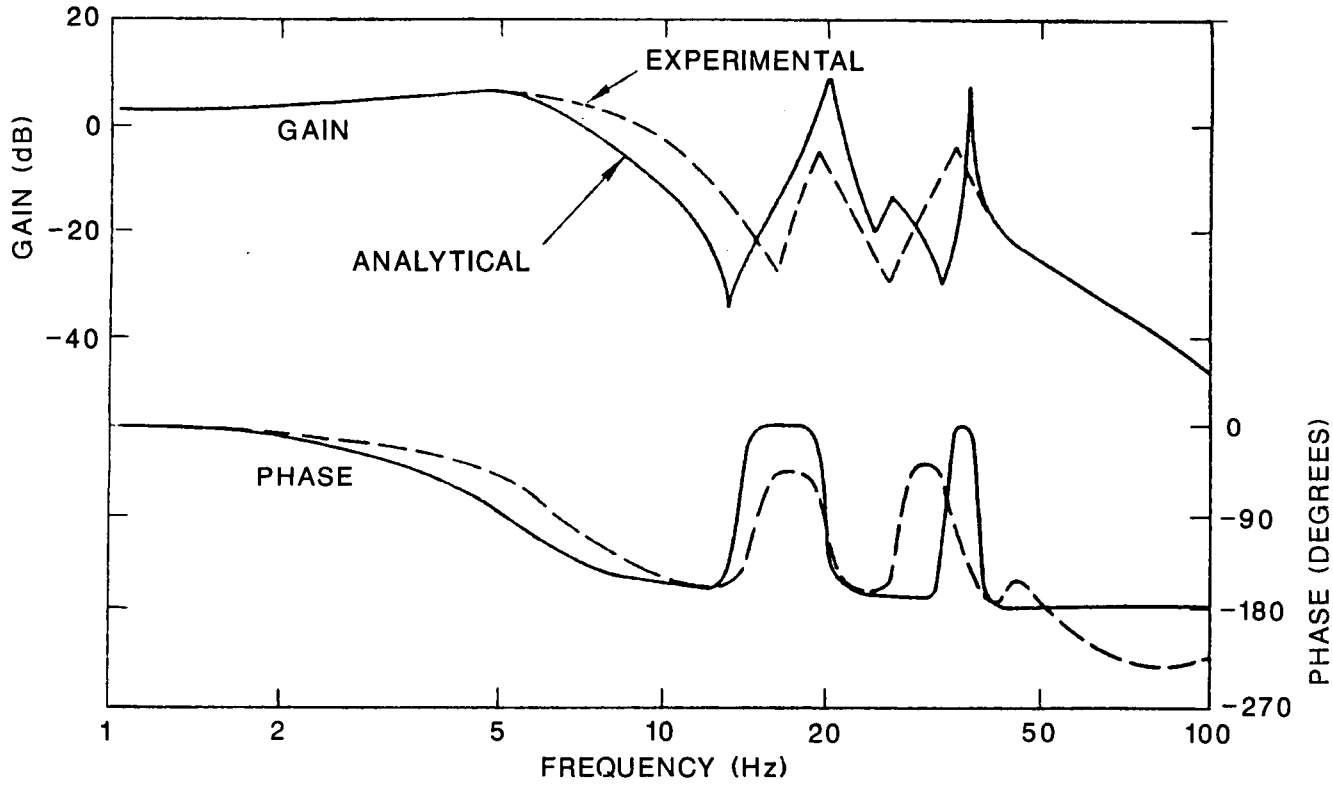

Comparison of Analytically and Experimentally Determined Serve Valve-to-Tachometer Transfer Functions for Base Drive

This figure shows an example of the manipulators first mode shape for a typical position obtained using FLEXARM.

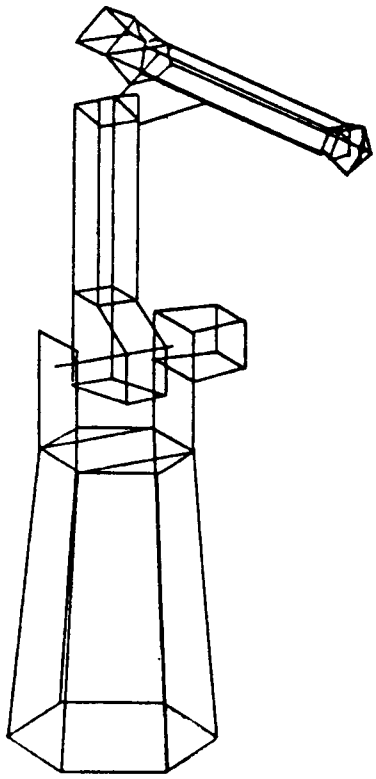

a – TEST POSITION

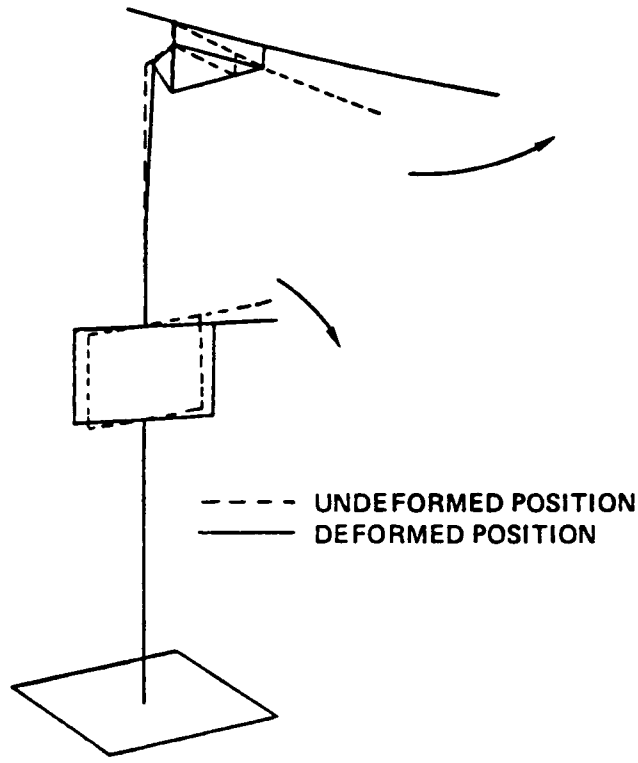

b – MODE SHAPE AT 20 Hz

The open-loop control analysis done using FLEXARM shows that the stability margins of the system are greatly reduced by the link flexibility.

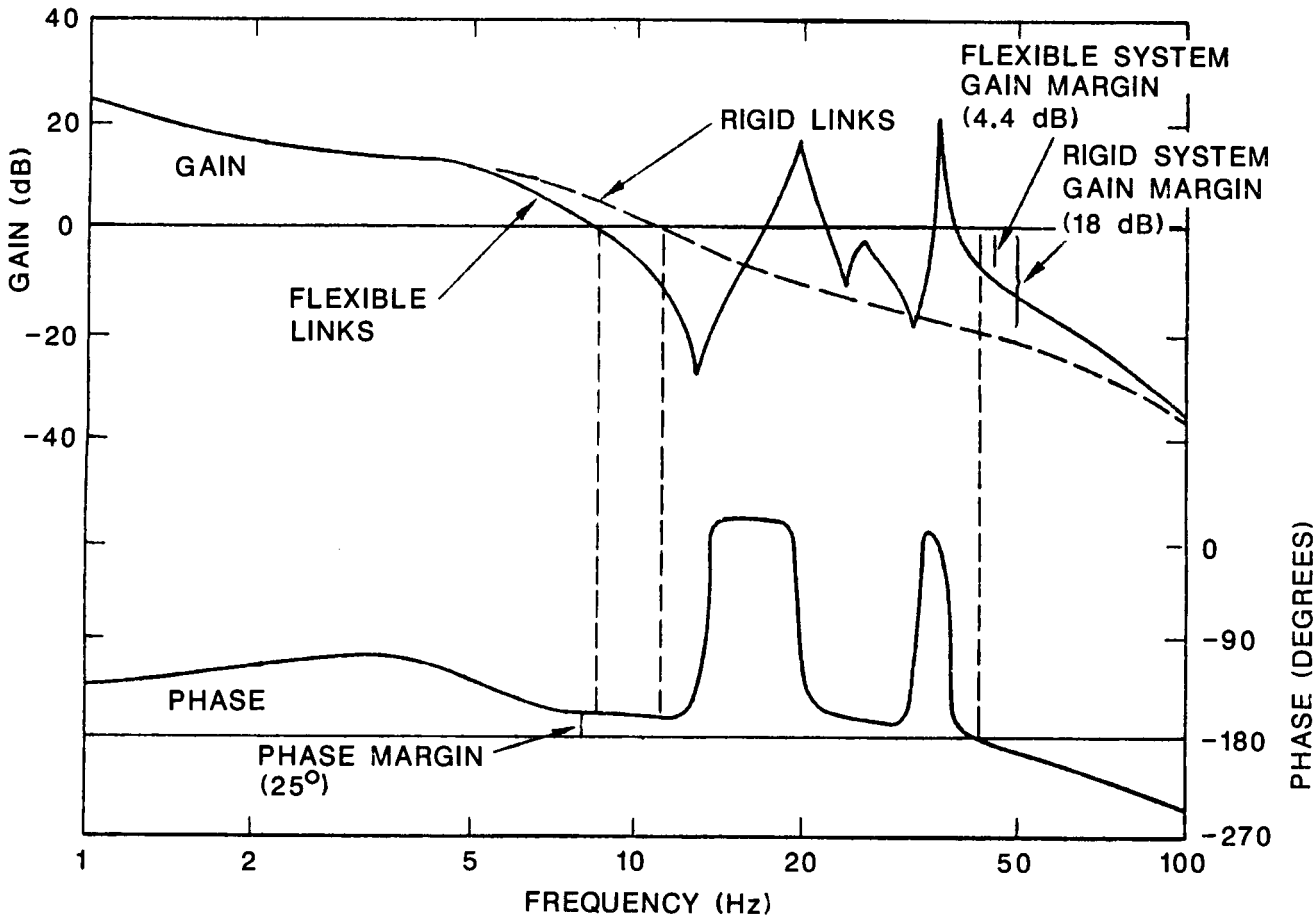

Analytically Predicted Open-Loop Transfer Function for Base Control Loop

The next group of figures shows the results for FLEXARM simulation of a typical large motion manipulator move.

First, we see the manipulator in its initial position. It will start here from rest. This figure is typical of the computer graphics output mode of FLEXARM. It will then move to its final position with the tip traveling along a straight line in three-dimensional space.

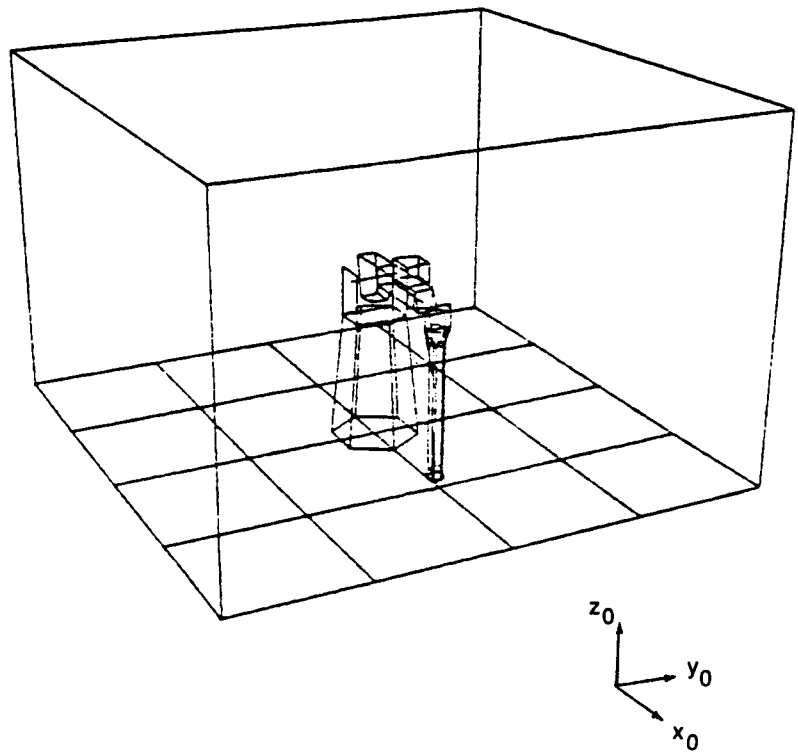

Rotated View of Manipulator in Workspace

Here the several positions of the manipulator are along its straight line path. As it is standard for many commercial systems, the manipulator tip is commanded to move along its path at a constant acceleration until a constant velocity is reached. It then moves at that constant velocity and then at some point it decelerates to its final position.

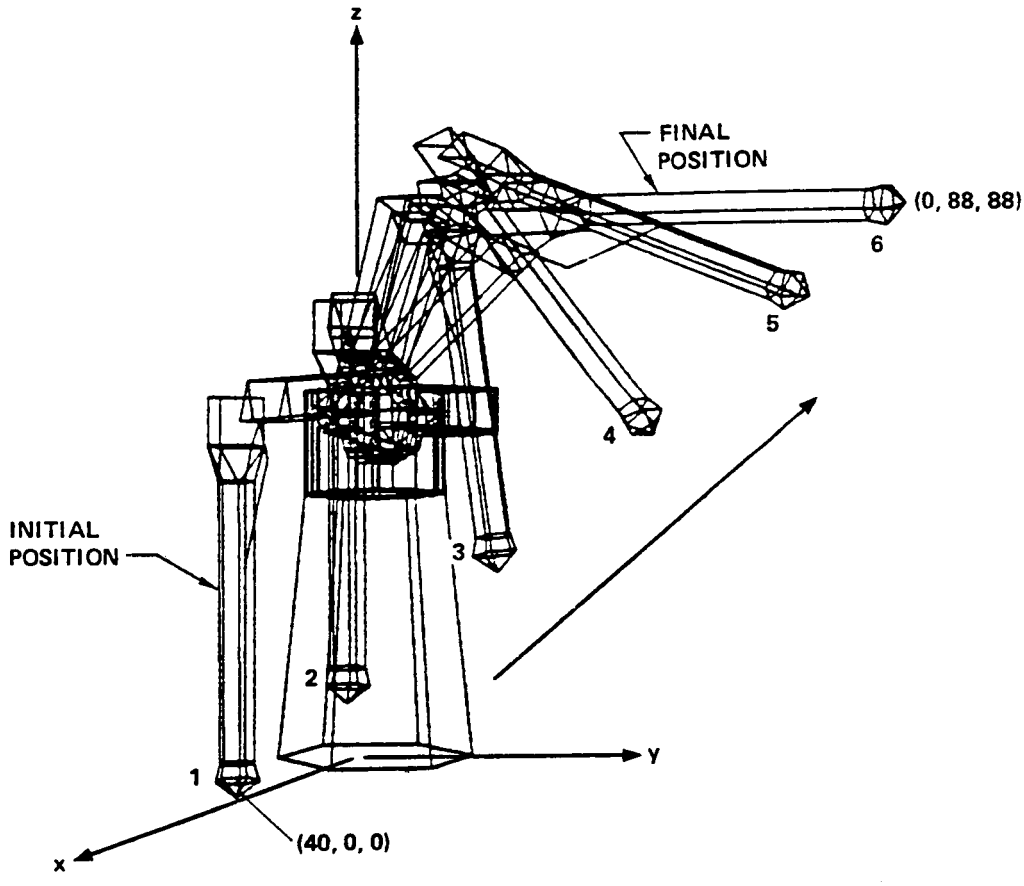

As shown here, the joint motions for a simple straight line move are complex functions of time because of the nonlinear kinematic transformations. These joint angles are required as position inputs to the manipulator control systems. The T3R3 is capable of using both velocity and acceleration feed forward signals as well.

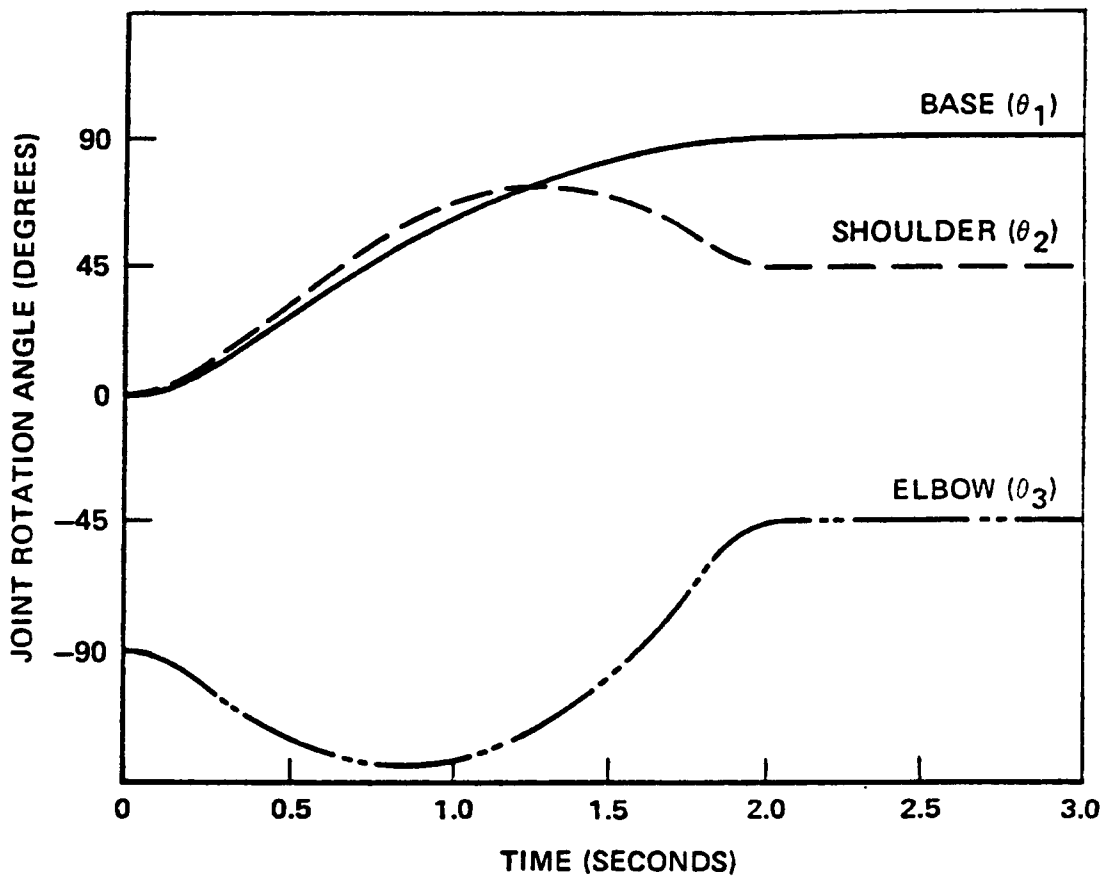

The resulting error in the tip position, measured from its nominal position, is shown here as a function of time. Both the response for a "rigid" system and a flexible system are shown. In both cases there are relatively large errors during the acceleration and deceleration phases of the manipulator's motion. For the rigid case most of the error can be attributed to the compressibility of the hydraulic fluid used in the system's drives. The error of the flexible case is significantly larger than that of the rigid case. An important aspect to be noted in this figure is that the time required for the flexible manipulator to settle within its error specification of 0.25 mm at the end of the motion is nearly twice that for the rigid link system. This increased settling time can have a very substantial impact on the productivity of the system in many practical applications. It might also be noted that the results of the studies predict that flexibility of the floor on which the T3R3 is supported can have a very significant effect on the systems performance. In fact, if the floor concrete is less than 4 inches thick, the system can exhibit unstable behavior in certain manipulator positions.

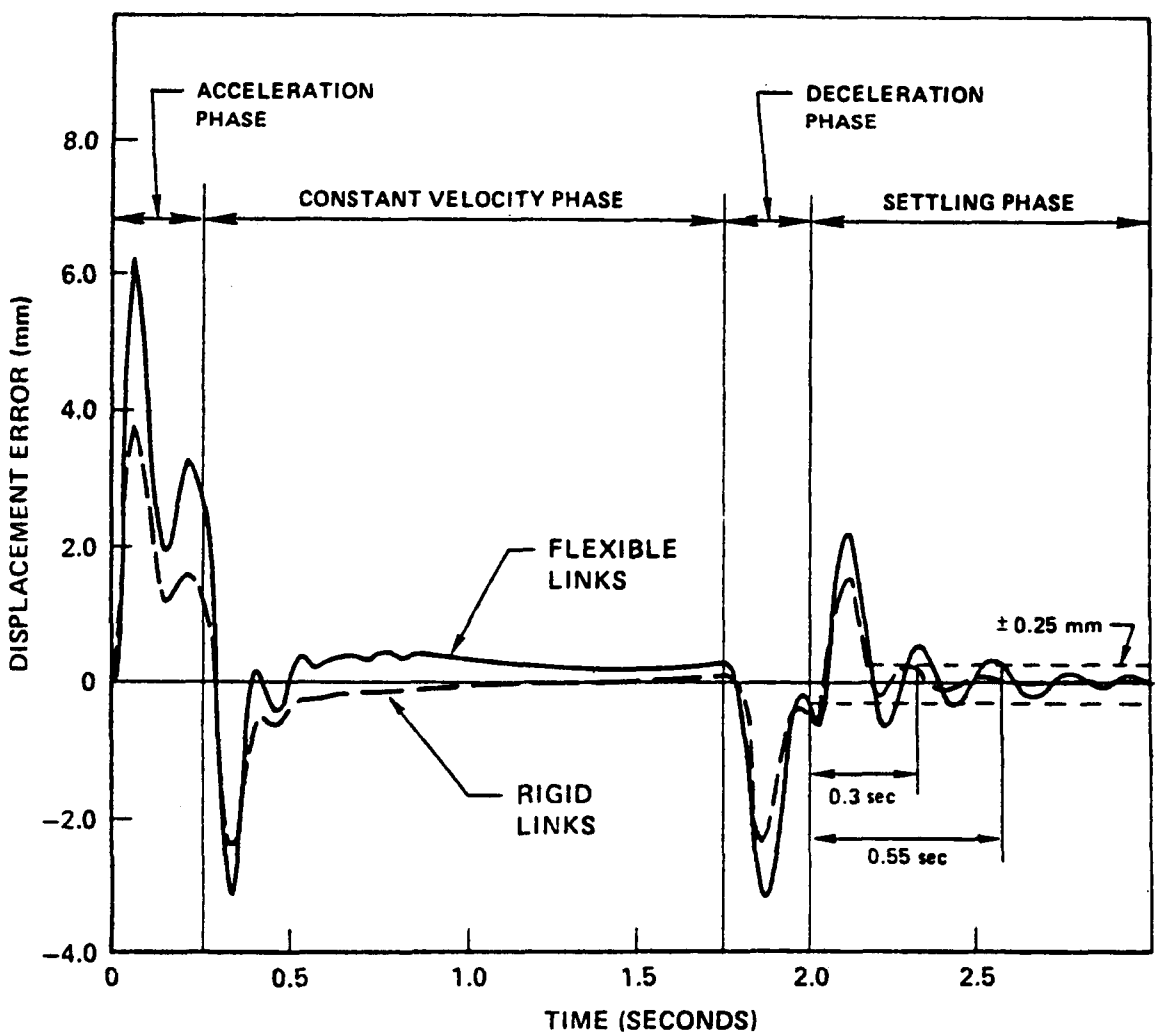

Currently, control algorithms are not available which will effectively control the highly nonlinear dynamic behavior of flexible manipulators. Substantial research on this problem is now being done, but it is a difficult problem.

SOLUTIONS TO FLEXIBILITY PROBLEM

SHORT TERM:

USE OF NEW MATERIALS AND DESIGN CONFIGURATIONS TO MAKE MANIPULATORS LIGHTER - YET MORE RIGID.

LONG TERM:

THE DEVELOPMENT OF CONTROL SYSTEMS TO COMPENSATE MANIPULATOR FLEXIBILITY - AND IDEALLY EXPLOIT IT TO ACHIEVE ULTRA-HIGH SYSTEM PERFORMANCE.

CONCLUSIONS

* FLEXIBILITY CAN PLAY AN IMPORTANT ROLE IN THE DYNAMIC PERFORMANCE OF HIGH-PERFORMANCE MACHINE SYSTEMS.

* EFFICIENT AND ACCURATE FEM METHODS CAN BE DEVELOPED FOR THE MODELING OF NONLINEAR MACHINE SYSTEMS, INCLUDING ROBOTIC MANIPULATORS.

* THE CURRENT MANIPULATORS ARE DESIGNED TO AVOID THE PROBLEMS INTRODUCED BY FLEXIBILITY. HOWEVER, THIS SIGNIFICANTLY LIMITS THE PERFORMANCE OF THESE SYSTEMS.

* NEW CONTROL SYSTEM ALGORITHMS ARE REQUIRED TO PERMIT THE DESIGN OF LIGHTWEIGHT HIGH-PERFORMANCE ROBOTIC SYSTEMS. THESE CONTROL ALGORITHMS NOT ONLY SHOULD COMPENSATE FOR SYSTEM FLEXIBILITY BUT THEY SHOULD ALSO EXPLOIT IT!

BIBLIOGRAPHY

1. "Application of Robotics and Artificial Intelligence to Reduce Risk and Improve Effectiveness: A Study for the United States Army," Published by the National Academy Press, Washington, D.C., 1983.

2. Dubowsky, S., "Dynamics and Control of Robotic Manipulators," Proceedings of the NATO Advanced Study Institute on Robotics and Artificial Intelligence, Castelveechio Pascoli, Italy, June 26 - July 3, 1983.

3. Sunada, W., and Dubowsky, S., "The Application of Finite Element Methods to the Dynamic Analysis of Flexible Spatial and Co-Planar Linkage Systems," J. of Mechanical Design, ASME Trans., Vol. 103, No. 3, pp. 643-651, July 1981.

4. Sunada, W., and Dubowsky, S., "On the Dynamic Analysis and Behavior of Industrial Robotic Manipulators with Elastic Members," J. of Mechanical Design, ASME Trans., Vol. 105, No. 1, pp. 42-51, March 1983.

5. Judd, R.P., and Falkenburg, D.R., "Dynamics of Nonrigid Articulated Robot Linkages," Proc. of the 1983 American Control Conference, San Francisco, CA, 1983.

6. Singh, R.P., and Likens, P.W., "Manipulator Interactive Design with Interconnected Flexible Elements," Proc. of the 1983 American Control Conference, San Francisco, CA, 1983.

7. Book, W.J., "Analysis of Massless Elastic Chains with Servo Controlled Joints," J. of Dynamic Systems, Measurement, and Control, ASME Trans., Vol. 107, pp. 187-192, 1979.

8. Book, W., Maizza-Neto, O., and Whitney, D.O., "Feedback Control of Two Beam, Two Joint System with Distributed Flexibility," J. of Dynamic Systems, Measurement, and Control, ASME Trans., Vol. 97, No. 4, pp. 424-431, Dec. 1975.

9. Truckenbrodt, A., "Modeling and Control of Flexible Manipulator Structures," Proc. of IV CISM-IFToMM Symposium on the Theory and Practice of Robots and Manipulators, Warsaw, Poland, Sept. 1981.

10. Cannon, R.H., and Schmitz, E., "Initial Experiments on the End-Point Control of a Flexible One-Link Robot," The International Journal of Robotics Research, The MIT Press, Vol. 3, No. 3, Fall, 1984.