X 90-36142

X90-36142 *
nasa pers. only

NASA Technical Memorandum 4233

Minimum Weight Design of a Leaf Spring Tapered in Thickness and Width for the Hubble Space Telescope-Space Support Equipment

P. I. Rodriguez

SEPTEMBER 1990

NASA

TECHNICAL LIBRARY
BUILDING 45
Johnson Space Center
Houston, Texas 77058

NASA Technical Memorandum 4233

Minimum Weight Design of a Leaf Spring Tapered in Thickness and Width for the Hubble Space Telescope-Space Support Equipment

P. I. Rodriguez
George C. Marshall Space Flight Center
Marshall Space Flight Center, Alabama

NASA
National Aeronautics and
Space Administration
Office of Management
Scientific and Technical
Information Division

1990

ACKNOWLEDGMENTS

The author wishes to express his appreciation to Mrs. Nancy Jarecki and Mr. Steve Marinelli for their support and suggestions during the derivation and computer implementation of the tapered beam equations. The author would also like to thank Mr. David Stargel for his assistance in the preparation of the graphs and charts.

TABLE OF CONTENTS

	Page
INTRODUCTION	1
LINEAR ELASTIC SOLUTION	1
WEIGHT OPTIMIZATION	7
COMPUTER IMPLEMENTATION	11
NUMERICAL EXAMPLES	11
TEST RESULTS	27
CONCLUSIONS	29
REFERENCES	31

LIST OF ILLUSTRATIONS

Figure	Title	Page
1.	HST space support equipment suspension system	3
2.	Leaf spring geometry	3
3.	Normalized bending stress variation for a typical double-tapered cantilever beam	8
4.	Initial leaf spring design configuration (half length)	18
5.	Deflection distribution for initial leaf spring design	18
6.	Stress distribution for initial leaf spring design	19
7.	History of design variables versus number of iterations	24
8.	History of deflection constraint versus number of iterations	25
9.	History of stress constraint versus number of iterations	25
10.	History of weight versus number of iterations	26
11.	Design space for leaf spring with additional side constraints	26
12.	Location of deflection and strain gauges	28
13.	Test results for leaf spring (6061-T6 aluminum)	30

LIST OF TABLES

Table	Title	Page
1.	Fortran program SPOPT	12
2.	Fortran program SPTRIAL	14
3.	Sample of input data required by SPTRIAL	19
4.	Output listing from SPTRIAL	20
5.	Sample of input data required by SPOPT	21
6.	Output listing from SPOPT (DOT optimizer)	22
7.	Optimization results for various initial designs	24

LIST OF SYMBOLS

A, B, C, D	constants
$a, b, c, d, e, f, g, h, j, k, l$	constants
$A1, B1, C1$	constants
E	modulus of elasticity
$F(X)$	objective function
FOS	factor of safety
f_n	natural frequency
G	acceleration factor
$g_j(X)$	inequality constraint
$h_k(X)$	equality constraint
$I(x)$	moment of inertia function
k	spring constant
k_T	total spring rate for isolation system
k_s	individual leaf spring stiffness
L	length of leaf spring
$M(x)$	bending moment function
m	mass
P	applied load
P_s	load per leaf spring
t_o	thickness at fixed end
t_e	thickness at free end
$t(x)$	thickness function
t_1, t_2	constants
Vol	volume
w_o	width at fixed end
w_e	width at free end
$w(x)$	width function
w_1, w_2	constants
$Wsse$	total weight
x	coordinate
x_o	origin of coordinate axis

LIST OF SYMBOLS (Continued)

x_{max}	location of maximum bending stress
X_i^{ℓ}	lower bound on design variable
X_i^{u}	upper bound on design variable
$x(1), x(2), x(3), x(4)$	design variables
$\alpha_1, \alpha_2, \alpha_3$	constants
Φ, Ψ	constants of integration
δ	beam (leaf spring) deflection
δ_{all}	allowable deflection
δ_{max}	maximum deflection
σ_b	bending stress
σ_y	yield stress

TECHNICAL MEMORANDUM

MINIMUM WEIGHT DESIGN OF A LEAF SPRING TAPERED IN THICKNESS AND WIDTH FOR THE HUBBLE SPACE TELESCOPE-SPACE SUPPORT EQUIPMENT

INTRODUCTION

During the life of the Hubble Space Telescope (HST), on-board optical guidance systems and scientific instruments will experience degradation. Maintenance or replacement of these systems will be necessary in order to maintain a fully operational observatory. Due to the cost and risk of retrieving the HST for ground refurbishment and consequent space redeployment, a series of maintenance missions have been identified in order to carry fine guidance sensors (FGS's) and scientific instruments (SI's) aboard the space shuttle for on-orbit replacement of degraded units. The weight of these units ranges from approximately 500 to 1,000 lb.

During the initial launch of the HST, these instruments form part of a 25,000-lb space observatory. This large mass provides the SI's and FGS's with a safe environment from the frequency spectrum of the space shuttle cargo bay. When launched separately as part of a maintenance mission, the protection from the dynamic environment must come from a suspension system that will preclude damage to these delicate optical and scientific instruments.

As part of the design of the suspension system, leaf springs (similar to those found in automobiles) have been designed to provide the necessary flexibility to alleviate potentially damaging dynamic loading. This report describes the design of a concept of a variable width and depth cantilever spring for the HST maintenance and refurbishment mission.

LINEAR ELASTIC SOLUTION

The basic idea behind the suspension system is to provide a certain stiffness (or flexibility) so that there is no danger of resonance between the natural frequency of the system (including the payload) and certain mechanical and acoustical frequencies encountered during the ascent or descent phase of the mission. There are also certain points in the ascent/descent frequency spectrum that could induce high transient loads into the hardware and, thus, the natural frequency of the suspension system should be different than these.

The first step in the design of the spring is to determine its stiffness or spring rate. Because the design of the suspension system will limit the movement of the spring/mass system to one direction, its natural frequency can be obtained from the equation of motion of a single degree-of-freedom system

$$m\ddot{x} + kx = 0 \quad . \tag{1}$$

Solution of equation (1) leads to definition of the natural frequency of the system [1],

$$f_n = \frac{1}{2\pi}\sqrt{\frac{k}{m}} \quad , \tag{2}$$

and solving for the stiffness k one obtains

$$k = 4m(f\pi)^2 \quad . \tag{3}$$

With the stiffness k and the mass m to be isolated, one has the information necessary to begin the design of the leaf spring. In order to produce an efficient spring that is compatible with the available installation space, a cantilever with variable width and depth has been selected. This is a hybrid between type F-3 (triangular cantilever) and type T-1 (tapered cantilever) which can be found in chapter 10 of reference 2. Figures 1 and 2 show the suspension system assembly and the geometry of the spring, respectively. At this point, it should be explained that the beam in figure 2 has the load applied at the two tapered ends through pins. The center (constant cross section) of the beam is clamped and bolted to essentially provide two cantilever springs instead of a longer simply supported spring.

By defining the widths and thicknesses at the fixed and free ends of the spring as w_o, w_e and t_o, t_e, respectively, one can express a linear taper for both the width and depth as

$$w(x) = w_e\left(\frac{x}{L}\right) + w_o\left(1 - \frac{x}{L}\right) \quad , \tag{4}$$

$$t(x) = t_e\left(\frac{x}{L}\right) + t_o\left(1 - \frac{x}{L}\right) \quad , \tag{5}$$

where $w(x)$ and $t(x)$ are the width and thickness at any position x along the length L of each cantilever (the origin x_o is located at the fixed (clamped) end). The moment of inertia at any point along the length is

$$I(x) = \frac{w(x)t(x)^3}{12} \quad . \tag{6}$$

Substituting equations (4) and (5) into equation (6) one obtains

$$I(x) = \frac{(w_1x + w_2)(t_1x + t_2)^3}{12} \quad , \tag{7}$$

where

$$w_1 = \frac{w_e - w_o}{L} \quad , \tag{8}$$

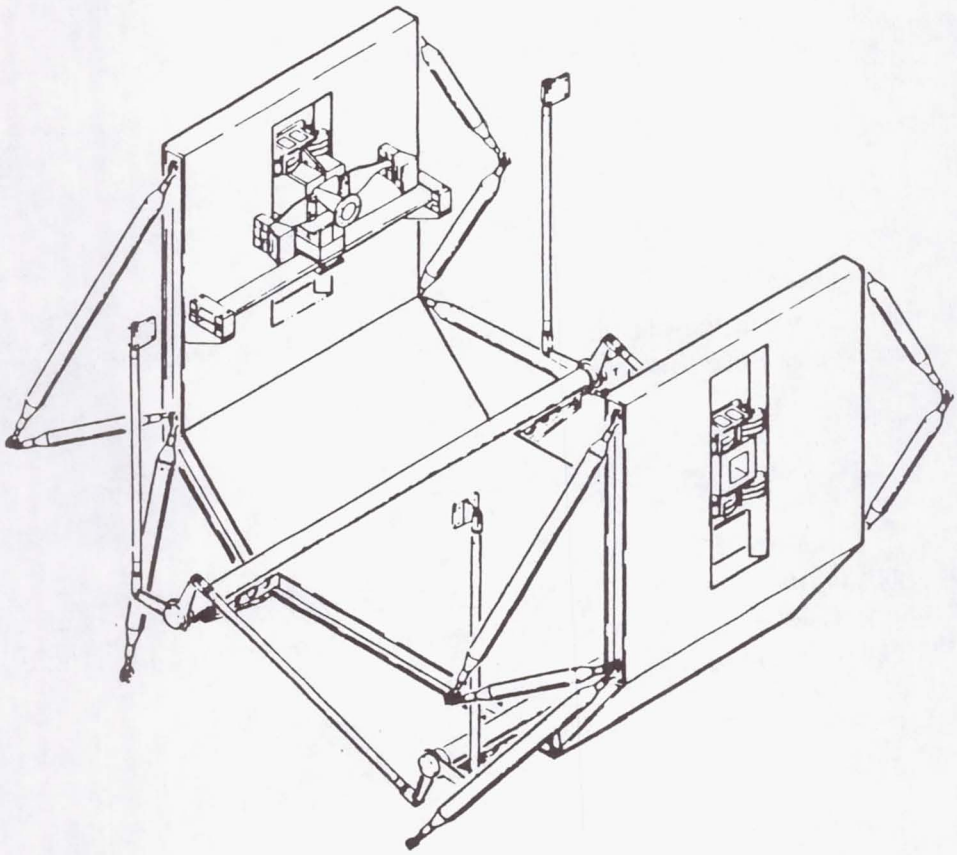

Figure 1. HST space support equipment suspension system.

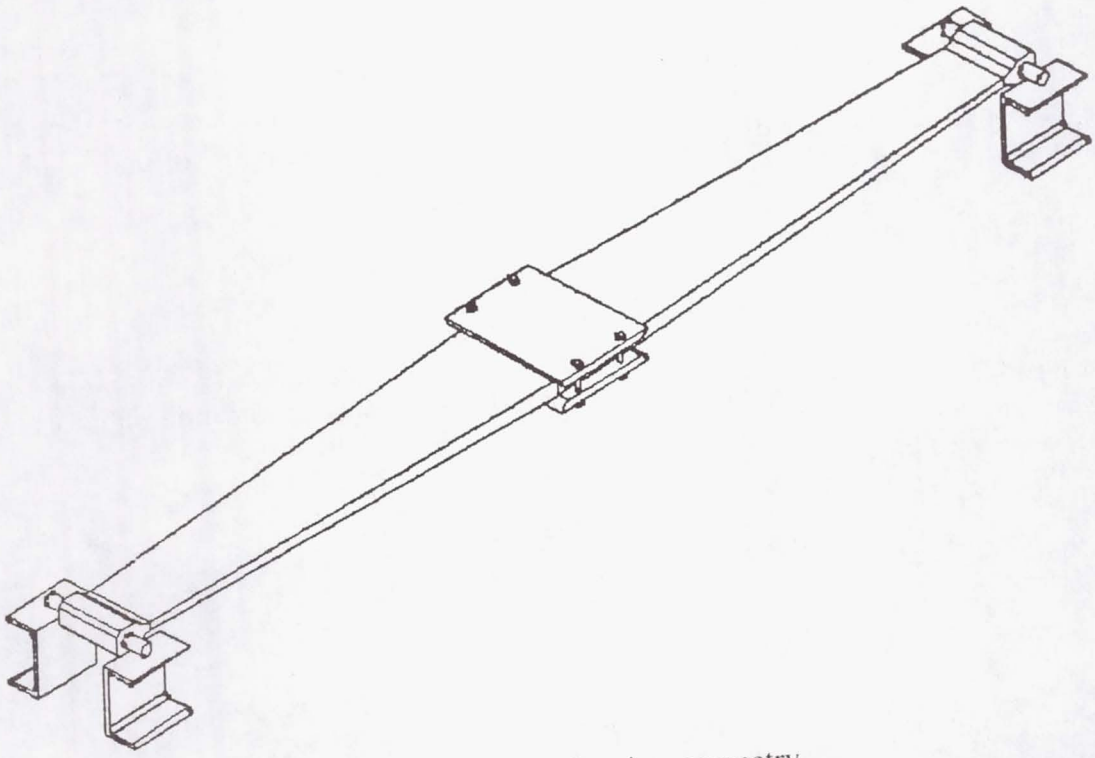

Figure 2. Leaf spring geometry.

$$w_2 = w_o \quad , \tag{9}$$

$$t_1 = \frac{t_e - t_o}{L} \quad , \tag{10}$$

$$t_2 = t_o \quad . \tag{11}$$

The relationship between the elastic axis of the spring and the bending moment for elastic deformations is given by the Euler-Bernoulli equation,

$$\frac{1}{\rho} = \frac{M(x)}{EI(x)} \quad . \tag{12}$$

Equation (12), although derived for prismatic bars, can be utilized in the analysis of tapered beams with sufficient accuracy as long as the variation of the taper is not extreme [3]. The equation for the curvature of the elastic beam is

$$\frac{1}{\rho} = \frac{d^2y/dx^2}{[1+(dy/dx)^2]^{3/2}} \quad . \tag{13}$$

When dealing with small deflections, which correspond to the linear range of equation (13), the effect of the dy/dx term becomes negligible and one can write

$$[1+(dy/dx)^2]^{3/2} \approx 1 \quad . \tag{14}$$

Combining equations (12), (13), and (14), one obtains the linear elastic range of the Euler-Bernoulli equation,

$$\frac{d^2y}{dx^2} = \frac{M(x)}{EI(x)} \quad . \tag{15}$$

Referring to figure 4 and recalling that the moment of inertia is a function of x, one can express equation (15) as

$$E\frac{d^2y}{dx^2} = \frac{12\ P(L-x)}{(w_1x+w_2)(t_1x+t_2)^3} \quad , \tag{16}$$

where

$$M(x) = P(L-x) \quad , \tag{17}$$

and $I(x)$ is defined as in equation (7). The right hand side of equation (16) can be expressed as a sum of partial fractions as follows,

$$\frac{12\,P(L-x)}{(w_1x+w_2)(t_1x+t_2)^3} = \frac{A}{w_1x+w_2} + \frac{B}{t_1x+t_2} + \frac{C}{(t_1x+t_2)^2} + \frac{D}{(t_1x+t_2)^3} \quad . \tag{18}$$

The following are defined,

$$a = t_1^3 \tag{19a}$$

$$b = 3t_1^2t_2 \tag{19b}$$

$$c = 3t_2^2t_1 \tag{19c}$$

$$d = t_2^3 \tag{19d}$$

$$e = t_1^2w_1 \tag{19e}$$

$$f = w_2t_1^2 + 2t_1t_2w_1 \tag{19f}$$

$$g = t_2^2w_1 + 2t_1t_2w_2 \tag{19g}$$

$$h = t_2^2w_2 \tag{19h}$$

$$j = t_1w_1 \tag{19i}$$

$$k = t_1w_2 + t_2w_1 \tag{19j}$$

$$\ell = t_2w_2 \quad . \tag{19k}$$

By solving the partial fractions problem of equation (18), and by using equations (19), one can obtain the expressions for the constants A, B, C, and D. In matrix form, these equations are,

$$\begin{Bmatrix} A \\ B \\ C \\ D \end{Bmatrix} = \begin{bmatrix} a & e & 0 & 0 \\ b & f & j & 0 \\ c & g & k & w_1 \\ d & h & \ell & w_2 \end{bmatrix}^{-1} \begin{Bmatrix} 0 \\ 0 \\ -12P \\ 12PL \end{Bmatrix} \quad . \tag{20}$$

Substituting the values of A, B, C, and D obtained in equations (20) into equation (18), one can now express equation (16) as follows,

$$E\frac{d^2y}{dx^2} = \frac{A}{w_1x+w_2}+\frac{B}{t_1x+t_2}+\frac{C}{(t_1x+t_2)^2}+\frac{D}{(t_1x+t_2)^3} \quad . \tag{21}$$

Performing consecutive integrations on equation (21) will lead to the equation for the deflection of the beam. The first integration leads to the equation of the slope of the beam.

$$E\int_L\left(\frac{d^2y}{dx^2}\right)dx = E\frac{dy}{dx} = \frac{A}{w_1}\ln(w_1x+w_2)+\frac{B}{t_1}\ln(t_1x+t_2)$$
$$-\frac{C}{t_1(t_1x+t_2)}-\frac{D}{2t_1(t_1x+t_2)^2}+\Phi \quad . \tag{22}$$

Φ is a constant of integration, which evaluated at $x=0$ with $dy/dx = 0$ yields

$$\Phi = \frac{C}{t_1t_2}+\frac{D}{2t_1t_2^2}-\frac{A}{w_1}\ln w_2-\frac{B}{t_1}\ln t_2 \quad . \tag{23}$$

Performing a second integration on equation (22) leads to the expression for the deflection at any point on the beam,

$$E\int_L\left(\frac{dy}{dx}\right)dx = Ey = \frac{A}{w_1}\left[\frac{w_1x+w_2}{w_1}\{\ln(w_1x+w_2)\}-x\right]+\frac{B}{t_1}\left[\frac{t_1x+t_2}{t_1}\{\ln(t_1x+t_2)\}-x\right]$$
$$-\frac{C}{t_1}\left[\frac{1}{t_1}\{\ln(t_1x+t_2)\}\right]+\frac{D}{2t_1}\left[\frac{1}{t_1(t_1x+t_2)}\right]+\Phi x+\Psi \quad , \tag{24}$$

where Ψ is a second constant of integration which can be evaluated at $x=0$ where $y=0$.

$$\Psi = -\frac{A}{w_1^2}(w_2\ln w_2)-\frac{B}{t_1^2}(t_2\ln t_2)+\frac{C}{t_1^2}(\ln t_2)-\frac{D}{2t_1^2t_2} \quad . \tag{25}$$

Equation (24) is the linear elastic solution for the deflection of a variable thickness and width cantilever beam.

The maximum bending stress for the beam of constant cross section will occur at the location where the bending moment is maximum. This is not the case for a beam having a variable thickness. Since the moment of inertia of the beam is a function of the cube of the thickness, the

section modulus changes much faster than the bending moment as a function of beam length. This causes the maximum bending stress to occur at a location other than the point of maximum bending moment. A normalized plot comparing the bending moment, bending stress, and moment of inertia for a typical cantilevered beam of tapered width and thickness can be found in figure 3. The expression for bending stress for the beam under study is

$$\sigma_b = \frac{6\,P(L-x)}{(w_1 x + w_2)(t_1 x + t_2)^2} \quad . \tag{26}$$

Since the maximum bending stress is now a function of the varying cross section as well as the location along the length of the beam, one can find the maximum by setting the derivative of equation (26) equal to zero,

$$\frac{d\sigma_b}{dx} = 0 \quad . \tag{27}$$

The resulting expression is a cubic equation in x which can be solved to obtain the location of maximum stress

$$x^3 + \alpha_1 x^2 + \alpha_2 x + \alpha_3 = 0 \quad , \tag{28}$$

where

$$\alpha_1 = \frac{1}{2}\left(\frac{w_2}{w_1}\right) + \frac{t_2}{t_1} - \frac{3}{2}L \quad , \tag{29a}$$

$$\alpha_2 = -L\left[2\left(\frac{t_2}{t_1}\right) + \frac{w_2}{w_1}\right] , \tag{29b}$$

$$\alpha_3 = -\left[\frac{w_2 t_2 L}{w_1 t_1} + \frac{t_2^2 L}{2t_1^2} + \frac{w_2 t_2^2}{2w_1 t_1^2}\right] \quad . \tag{29c}$$

All three roots of equation (28) will be real, with only one root being physically meaningful. Substitution of the location of maximum stress x_{max} (feasible root of equation (28)) into equation (26) yields the maximum stress in the beam. At this point, one has the necessary information to design a beam with a desired stiffness and subject to a maximum allowable bending stress.

WEIGHT OPTIMIZATION

In the aerospace industry, minimum weight of flight structures is of primary importance to the structural design engineer. The use of the space shuttle as a space transportation vehicle results in an approximate cost of $1,100.00 per pound to deliver a payload to Earth orbit. It is, therefore, obvious that lighter payloads result in lower costs and are in the best interest of the government. The challenge is to be able to minimize the weight of a design by varying a select group of parameters and not violate constraints that are essential to the structural integrity of the hardware.

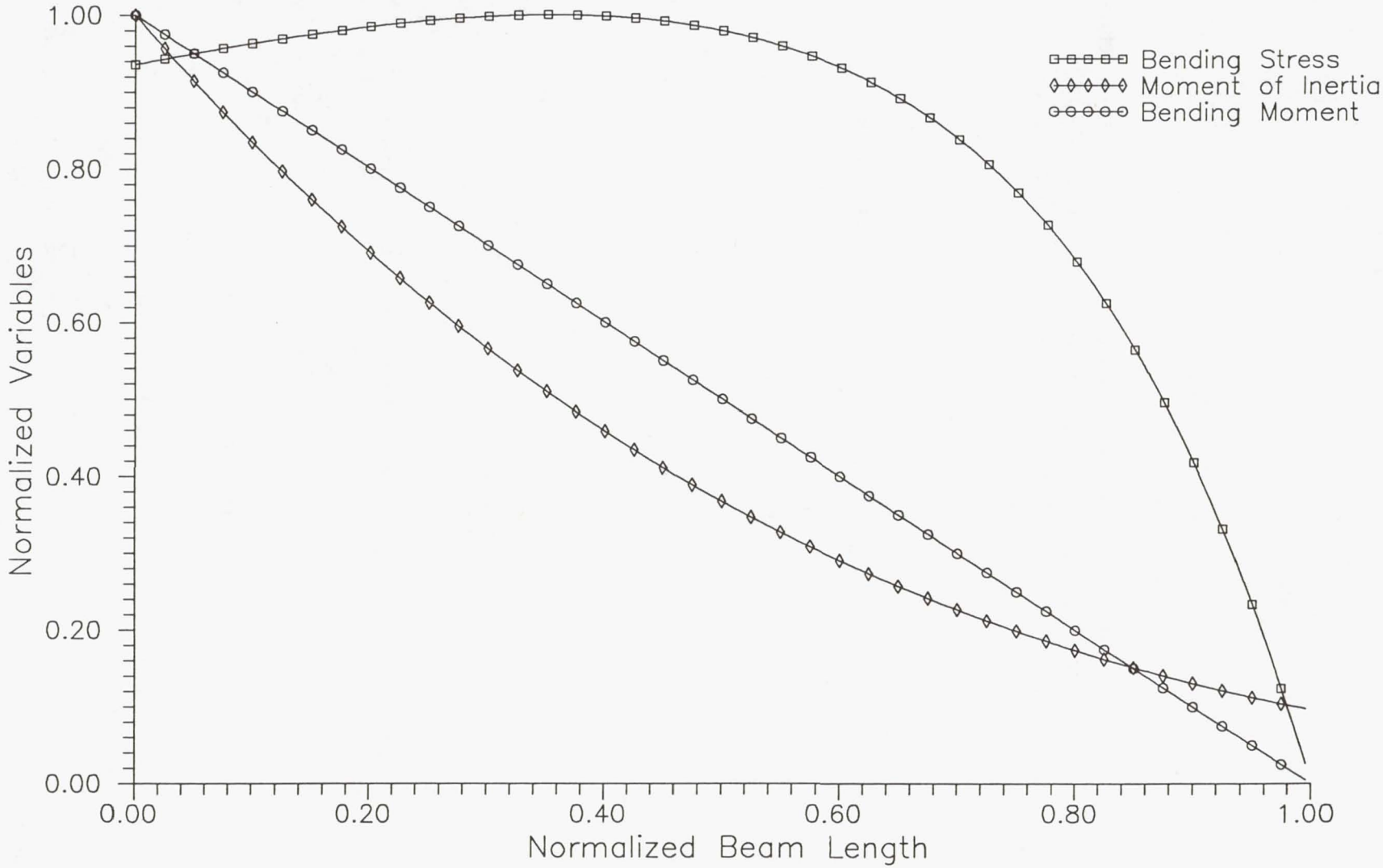

Figure 3. Normalized bending stress variation for a typical double tapered cantilever beam.

During recent years, advancements in the field of mathematical programming coupled with the everchanging state-of-the-art in personal computer hardware have provided a great opportunity for improvement in optimization software and code availability. Commercial and academic optimization packages are currently available that will work on almost every personal computer hardware platform. Examples of these are I-DESIGN (University of Iowa, Dr. Jasbir Arora) and DOT (Vanderplaats, Miura & Associates). Other packages that have been generated under government contracts are ADS, CONMIN, ACCESS, and NEWSUMT. Additional information on optimization software availability can be found in references 4, 5, and 6.

The general problem statement for the minimization of a function of several variables subject to conditions of constraint is,

Minimize: $$F(X) \tag{30}$$

Subject to: $$g_j(X) \leq 0 \qquad j=1,m \tag{31}$$

$$h_k(X) = 0 \qquad k=1,l \quad , \tag{32}$$

where X is the vector containing the design variables, F is the objective function (function to be minimized), g_j are the inequality constraints, and h_k are the equality constraints. In order to limit the region of search for the optimum, side constraints are imposed on the problem. This is accomplished by simply imposing upper and lower bounds on the search values of the design variables,

$$X_i^l \leq X_i \leq X_i^u \qquad i=1,n \quad . \tag{33}$$

For the problem of weight minimization the objective function is the volume of the beam. This volume can be obtained by integrating a differential element of area over the entire length of the beam,

$$\text{Vol} = \int_0^L w(x)t(x)dx \quad , \tag{34}$$

where

$$w(x) = w_1 x + w_2 \tag{35}$$

$$t(x) = t_1 x + t_2 \quad , \tag{36}$$

and w_1, w_2, t_1, and t_2 are defined in equations (8) through (11). After performing the necessary integration, the objective function can be expressed as

$$W(X) = A_1 x(1)x(2) + B_1[x(1)x(4) + x(2)x(3)] + C_1 x(2)x(4) \quad , \tag{37}$$

where

$$A_1 = \rho L^3/3 \tag{38}$$

$$B_1 = \rho L^2/2 \tag{39}$$

$$C_1 = \rho L \quad . \tag{40}$$

and ρ is the density of the material. In order to express the design variables in a logical and consistent manner for computer implementation, they have been identified as follows.

$$x(1) = w_1 \tag{41a}$$

$$x(2) = w_2 \tag{41b}$$

$$x(3) = t_1 \tag{41c}$$

$$x(4) = t_2 \quad . \tag{41d}$$

For the purpose of this report, it is desired to design a beam of minimum weight that does not exceed the allowable yield stress of the material. This means that the working stress, equation (26), may not exceed the yield stress of the material. One can identify this restriction as an inequality constraint and, in normalized fashion, it can be expressed as follows.

$$\frac{\sigma_b}{\sigma_y} - 1 \leq 0 \quad . \tag{42}$$

Since one is looking for a specific stiffness of the beam, the maximum deflection must be set equal to a prescribed value. This value determines the desired natural frequency of the beam for a prescribed load. Using equation (24), one can identify this restriction as an equality constraint and, normalized, it will be expressed as follows.

$$\frac{\delta}{\delta_{all}} - 1 = 0 \quad . \tag{43}$$

In equation (24), y indicates the deflection of the cantilevered beam at any location x along its length. In equation (43), δ is the maximum deflection of the beam which occurs at the tip of the cantilever. δ_{all} is the deflection associated with the desired natural frequency of the system to be dynamically isolated.

Minimization of equation (37), subject to constraint equations (42) and (43), identifies the optimization problem. This problem can be stated as follows: "Find the minimum weight W of a variable cross section beam under a specific loading condition that will not exceed the allowable material yield stress σ_y and will have a maximum deflection of δ_{all}."

The optimization software used in the solution of this problem is Design Optimization Tools (DOT's). Version 2.00 of this commercially available software allows solution of the problem using two known methods, "modified method of feasible directions" (MMFD) or "sequential linear programming" (SLP). The MMFD is a modification of the method of feasible directions (MFD) in which equality constraints can be handled by including them as part of a pseudo-objective function. The MFD algorithm is not capable of effectively dealing with equality constraints. Description of the MFD and SLP algorithms can be found in references 5 and 7. Description of the MMFD can be found in reference 7.

COMPUTER IMPLEMENTATION

The cantilever beam of variable width and depth with deflection and stress constraints can have many feasible solutions. Physically, this means that many combinations of w_o, w_e, t_o, and t_e will lead to improved designs. Numerically, this means that the initial design variables must be carefully selected. The fact that the problem has many relative minima indicates that small variations in the initial choices of design variables can lead to significant improvement in the design or nonconvergence.

In an effort to provide reasonable first choices of initial variables, a computer program has been generated that will provide feasible design solutions. These solutions, although not necessarily the least weight designs, provide design variables that will attempt to meet the stress and deflection constraints. The program SPTRIAL thus provides initial solutions to the optimization problem.

Once the initial values of the design variables have been chosen, they are input into the computer program SPOPT (SPring OPTimization) to obtain a design of minimum weight. SPOPT is a calling program that accesses the DOT optimizing software. Tables 1 and 2 are listings of the Fortran programs SPOPT and SPTRIAL, respectively.

NUMERICAL EXAMPLES

The initial design of the springs for the HST/space support equipment (HST/SSE) was performed without the benefit of optimization software. This means that numerous hand calculations were performed and small, tailored computer programs were developed to aid in the many iterative calculations involved. The goal here was to obtain a design that would meet the stress and deflection constraints imposed. Weight minimization, although a big driver, was aimed at changing material/spring configuration combinations and not at refining the final geometry. Vast improvements in weight were accomplished by changing from coiled to multileaf to single leaf springs during the preliminary design phase. Once a configuration was selected, the refinement was limited to adjusting tolerances to meet the desired deflection while maintaining the stresses under the allowables.

In this section, the author will start from the final spring geometry that resulted from the preliminary design phase and attempt to optimize the weight by using the SPTRIAL/SPOPT

Table 1. Fortran program SPOPT.

```
      IMPLICIT DOUBLE PRECISION (A-H,O-Z)
      DIMENSION X(4),XA(4,5),XL(4),XU(4),G(3),WK(800)
      DIMENSION ADP(4,5),IWK(200),RPRM(20),IPRM(20),STRM(50)
      OPEN(UNIT=7,FILE='C:\FORTRAN\DOT.DAT')
      OPEN(UNIT=8,FILE='C:\FORTRAN\VAR.DAT')
      OPEN(UNIT=9,FILE='C:\FORTRAN\DEFSTR.DAT')
C
      NRWK=800
      NRIWK=200
      DO 10 I=1,20
      RPRM(I)=0.0
      IPRM(I)=0
   10 CONTINUE
      IPRM(5)=7
      METHOD=1
      NDV=4
      NCON=3
C
      WRITE(6,*)'ENTER THE BEAM LENGTH'
      READ(5,*)XD
      XI=XD
      WRITE(6,*)'ENTER INITIAL GUESS FOR WE (MAXIMUM=9.999)'
      READ(5,*)WE
      WRITE(6,*)'ENTER INITIAL GUESS FOR WO (MAXIMUM=10.0)'
      READ(5,*)WO
      WRITE(6,*)'ENTER INITIAL GUESS FOR TE (MAXIMUM=1.499)'
      READ(5,*)TE
      WRITE(6,*)'ENTER INITIAL GUESS FOR TO (MAXIMUM= 1.50)'
      READ(5,*)TO
C ***** INITIAL VALUES OF THE DESIGN VARIABLES *****
      X(1)=WE
      X(2)=WO
      X(3)=TE
      X(4)=TO
C ***** LOWER BOUNDS ON THE DESIGN VARIABLES *****
      XL(1)=.999
      XL(2)=1.00
      XL(3)=.2499
      XL(4)=.25
C ***** UPPER BOUNDS ON THE DESIGN VARIABLES *****
      XU(1)=9.999
      XU(2)=10.0
      XU(3)=1.499
      XU(4)=1.50
C
      WRITE(6,*)'ENTER MATERIAL DENSITY'
      READ(5,*)RHO
      WRITE(6,*)'ENTER ALLOWABLE STRESS'
      READ(5,*)SIGALL
      WRITE(6,*)'ENTER DESIRED DEFLECTION'
      READ(5,*)DEFALL
      BASE=WO
      HGHT=TO
      NX=50
      WRITE(6,*)'ENTER APPLIED LOAD'
      READ(5,*)P
      WRITE(6,*)'ENTER MODULUS OF ELASTICITY'
      READ(5,*)XMOD
      XINRT=BASE*(HGHT**3)/12.
      TDEF=P*(XD**3)/(3*XMOD*XINRT)
      STRCHK=0.0
      DO 20 I=1,NX
      STRM(I)=0.0
   20 CONTINUE
C
      IPRINT=3
      MINMAX=-1
      INFO=0
      IT=0
  100 CALL DOT(INFO,METHOD,IPRINT,NDV,NCON,X,XL,XU,
     1OBJ,MINMAX,G,RPRM,IPRM,WK,NRWK,IWK,NRIWK)
      IF(X(1).EQ.X(2)) X(1)=X(2)-.00001
      IF(X(3).EQ.X(4)) X(3)=X(4)-.00001
      IT=IT+1
      IF(INFO.EQ.0)GO TO 70
      X1=(X(1)-X(2))/XD
      X2=X(2)
      X3=(X(3)-X(4))/XD
      X4=X(4)
      WRITE(8,85)IT,X(1),X(2),X(3),X(4)
   85 FORMAT(I4,4E15.6)
      OBJ=(RHO*XD/3)*(X(4)*X(2)+X(1)*X(3))
     1+(RHO*XD/6)*(X(4)*X(1)+X(3)*X(2))
      DO 50 J = 1,NX
      STRESS=6*P*(XD-XI)/((X1*XI+X2)*((X3*XI+X4)**2))
      STRM(J)=STRESS
C
      CALL DEFLEC(X1,X2,X3,X4,ADP,DEFL,SLOPE,XI,XMOD,P,XD)
C
      IF(XI.EQ.XD)THEN
      DEFMAX=DEFL
      IF(TDEF.GT.DEFL)THEN
      DO 60 K=1,NX
      X3=((X(3)+.02)-X(4))/XD
      STRES1=6*P*(XD-XI)/((X1*XI+X2)*((X3*XI+X4)**2))
      CALL DEFLEC(X1,X2,X3,X4,ADP,DEFL1,SLP1,XI,XMOD,P,XD)
      X(3)=((X(3)-.02)-X(4))/XD
      STRES2=6*P*(XD-XI)/((X1*XI+X2)*((X3*XI+X4)**2))
      CALL DEFLEC(X1,X2,X3,X4,ADP,DEFL2,SLP2,XI,XMOD,P,XD)
      DEFL=(DEFL1+DEFL2)/2
      IF(XI.EQ.XD) DEFMAX=DEFL
      SLOPE=(SLP1+SLP2)/2
      STRESS=(STRES1+STRES2)/2
      STRM(J)=STRESS
      IF(XI.EQ.XD)THEN
      G(1)=(DEFL-(DEFALL*1.001))/(DEFALL*1.001)
      G(3)=((DEFALL*.999)-DEFL)/(DEFALL*.999)
      ENDIF
      IF(STRESS.LT.STRCHK)THEN
      IF(NCHK.EQ.1)GO TO 61
      STRMAX=STRESS
      G(2)=(STRMAX-SIGALL)/SIGALL
```

Table 1. Fortran program SPOPT (continued)

```
      NCHK=1
      ENDIF
   61 XI=XI-XD/NX
      STRCHK=STRESS
   60 CONTINUE
      GO TO 75
      ENDIF
      ENDIF
      IF(XI.EQ.XD)THEN
      DEFMAX=DEFL
      G(1)=(DEFL-(DEFALL*1.001))/(DEFALL*1.001)
      G(3)=((DEFALL*.999)-DEFL)/(DEFALL*.999)
      ENDIF
      IF(STRESS.LT.STRCHK)THEN
      IF(NCHK.EQ.1)GO TO 62
      STRMAX=STRESS
      G(2)=(STRMAX-SIGALL)/SIGALL
      NCHK=1
      ENDIF
   62 XI=XI-XD/NX
      STRCHK=STRESS
   50 CONTINUE
C
C     ***PERFORM A SORT TO FIND MAXIMUM IF STRESS IS STRICTLY
C     INCREASING AT THE FIXED END OF THE LEAF SPRING ****
C
      IF(NCHK.EQ.0)THEN
      LAST=NX-1
      DO 30 I=1,LAST
      SMIN=STRM(I)
      JMIN=I
      JFIRST=I+1
      DO 40 J=JFIRST,NX
      IF(SMIN.LE.STRM(J))GO TO 40
      SMIN=STRM(J)
      JMIN=J
   40 CONTINUE
      STRM(JMIN)=STRM(I)
      STRM(I)=SMIN
   30 CONTINUE
      STRMAX=STRM(NX)
      G(2)=(STRMAX-SIGALL)/SIGALL
      ENDIF
C
C
      DO 45 I=1,NX
      STRM(I)=0.0
   45 CONTINUE
   75 XI=XD
      STRCHK=0.0
      NCHK=0
      WRITE(9,*)IT,DEFMAX,STRMAX
      GO TO 100
   70 STOP
      END
```

Table 2. Fortran program SPTRIAL.

```
      IMPLICIT DOUBLE PRECISION (A-H,O-Z)
      DIMENSION X(4),XA(4,5)
      DIMENSION ADP(4,5)
      OPEN(UNIT=8,FILE='C:\FORTRAN\SPTRIAL.DAT')
      ICOUNT=0
      KOUNT=0
      NX=15
      WRITE(6,*)'ENTER ALLOWABLE STRESS'
      READ(5,*)SIGALL
      WRITE(6,*)'ENTER MODULUS OF ELASTICITY'
      READ(5,*)XMOD
      WRITE(6,*)'ENTER APPLIED LOAD'
      READ(5,*)P
      WRITE(6,*)'ENTER BEAM LENGTH'
      READ(5,*)XL
      WRITE(6,*)'ENTER DENSITY'
      READ(5,*)RHO
      WRITE(6,*)'ENTER DESIRED MAXIMUM DEFLECTION'
      READ(5,*)EDEF
      TET=(2*SIGALL*XL*XL)/(3*XMOD*EDEF)
      WRITE(6,*)'ENTER INITIAL GUESS FOR THICKNESS RATIO'
      READ(5,*)XRAT
      TO=TET/XRAT
      TE=TO-.000005
      WRITE(6,*)'ENTER LENGTH TO WIDTH RATIO'
      READ(5,*)WR
      WO=XL/WR
      WE=WO-.000005
      BASE=WO
      HGHT=TO
      WRITE(8,200)BASE,HGHT
200   FORMAT(/1X,'THE INITIAL GUESS FOR THE CROSS SECTIONAL AREA',/' AT
     1THE BASE (THICKEST PART) OF THE TAPERED BEAM IS:',/' WIDTH = ',F6.
     23,' & THICKNESS = ',F6.3)
      XINRT=BASE*(HGHT**3)/12.
      TDEF=P*(XL**3)/(3*XMOD*XINRT)
      WRITE(8,100)TDEF
100   FORMAT(/' THE DEFLECTION FOR A CONSTANT X-SECTION BEAM',/' WITH TH
     1ESE DIMENSIONS IS ',F6.3)
      TSTR=P*XL*TO/(2*XINRT)
      WRITE(8,101)TSTR
101   FORMAT(/' THE MAX. STRESS FOR A CONSTANT X-SECTION BEAM',/' WITH T
     1HESE DIMENSIONS IS ',F10.3)
      WRITE(8,207)
207   FORMAT(/' THE FOLLOWING RESULTS WILL INDICATE THE COMBINATIONS OF
     1WE, WO, TE, AND TO',/' THAT PRODUCE THE DESIRED DEFLECTION WITHIN
     2+/- 5%.  AT THE END OF',/' EACH RUN, MESSAGE STATEMENTS MIGHT APPE
     3AR RECOMMENDING MODIFICATIONS',/' TO A PREVIOUS RUN IN ORDER TO IN
     4CREASE ACCURACY.  THE SLOPE VALUES ARE GIVEN',/' IN RADIANS AND IN
     5DICATE THE SLOPE OF THE BEAM AT THE TIP WHERE THE',/' DEFLECTION I
     6S GREATEST. ')
      TEIN=TE
      DO 48 M = 1,4
      WRAT=WE/WO
      TE=TEIN
      DO 49 I = 1,80
      NCHK=0
      STRCHK=0.0
      XI=XL
      DO 50 J = 1,NX+1
      X(1)=(WE-WO)/XL
      X(2)=WO
      X(3)=(TE-TO)/XL
      X(4)=TO
      STRESS=6*P*(XL-XI)/((X(1)*XI+X(2))*((X(3)*XI+X(4))**2))
C
      CALL DEF(X,ADP,DEFL,SLOPE,XI,XMOD,P,XL)
C
      IF(XI.EQ.XL)THEN
      IF(TDEF.GT.DEFL)THEN
      DO 60 K=1,NX+1
      X(3)=((TE+.02)-TO)/XL  STRES1=6*P*(XL-
     XI)/((X(1)*XI+X(2))*((X(3)*XI+X(4))**2))
      CALL DEF(X,ADP,DEFL1,SLP1,XI,XMOD,P,XL)
      X(3)=((TE-.02)-TO)/XL  STRES2=6*P*(XL-
     XI)/((X(1)*XI+X(2))*((X(3)*XI+X(4))**2))
      CALL DEF(X,ADP,DEFL2,SLP2,XI,XMOD,P,XL)
      DEFL=(DEFL1+DEFL2)/2
      SLOPE=(SLP1+SLP2)/2
      STRESS=(STRES1+STRES2)/2
      IF(XI.EQ.XL)THEN
      DEFMAX=DEFL
      SLOMAX=SLOPE
      RATE=P/DEFMAX
      ENDIF
C
      IF(STRESS.LT.STRCHK)THEN
      IF(NCHK.EQ.1)GO TO 61
      STRMAX=STRCHK
      NCHK=1
      XM1=XI+XL/NX
      ENDIF
C
   61 XI=XI-XL/NX
      STRCHK=STRESS
      IF(K.EQ.NX+1)THEN
      IF(NCHK.NE.1)THEN
      STRMAX=STRESS
      XM1=XI
      IF(XI.LT.0.0)XM1=0.0
      ENDIF
      ENDIF
   60 CONTINUE
      GO TO 70
      ENDIF
      ENDIF
C
      IF(XI.EQ.XL)THEN
      SLOMAX=SLOPE
      DEFMAX=DEFL
      RATE=P/DEFMAX
      ENDIF
```

Table 2. Fortran program SPTRIAL (continued)

```
      IF(STRESS.LT.STRCHK)THEN
      IF(NCHK.EQ.1)GO TO 62
      STRMAX=STRCHK
      XM1=XI+XL/NX
      NCHK=1
      ENDIF
   62 XI=XI-XL/NX
      STRCHK=STRESS
      IF(J.EQ.NX+1)THEN
      IF(NCHK.NE.1)THEN
      STRMAX=STRESS
      IF(XI.LT.0.0)XI=0.0
      ENDIF
      ENDIF
   50 CONTINUE
   70 TRAT=TE/TO WEIGHT=(RHO*XL/6)*(TO*WO+TE*WE)+(RHO*XL/6)*(TO*WE+TE*WO)
      DIFF=ABS(DEFMAX-EDEF)
      IF(DIFF.LE..1)THEN
      ICOUNT=1
      SLOPEG=DATAN(SLOMAX)
      WRITE(8,206)
  206 FORMAT('*****************************************************
     1*******************')
      WRITE(8,203)
  203 FORMAT(/' DEFLECTION      WE          WO          TE          TO
     1  STRESS      SLOPE  ')
      WRITE(8,72)DEFMAX,WE,WO,TE,TO,STRMAX,SLOPEG
      WRITE(8,205)WEIGHT
  205 FORMAT(/' THE WEIGHT OF THE BEAM WITH THESE DIMENSIONS IS ',F7.3/'
     1*****************************************************************
     2************'/)
   72 FORMAT(1X,7(E10.5,1X))
      IF(STRMAX.GT.SIGALL)THEN
      KOUNT=1
      GO TO 46
      ENDIF
      ENDIF
   71 FORMAT(5(E12.5,1X))
      TE=TE-TEIN/80
   49 CONTINUE
   46 WRAT=WRAT-.25
      WE=WRAT*WO
   48 CONTINUE
      IF(ICOUNT.EQ.0)THEN
      WRITE(8,202)
  202 FORMAT(/'****** DEFLECTIONS ARE TO SMALL FOR THE BEAM ******'/'*
     1***** TRY DECREASING THE INITIAL THICKNESS RATIO ******')
      GO TO 300
      ENDIF
      IF(KOUNT.EQ.1)THEN
      WRITE(8,201)
  201 FORMAT(/'****** SOME OR ALL STRESSES EXCEED THE ALLOWABLE ******',
     1/'****** TRY INCREASING THE INITIAL THICKNESS RATIO ******')
      ENDIF
  300 STOP
      END
```

sequence approach. The importance of having adequate initial values of the design variables will also be demonstrated. This will be done by comparing the stress, deflection, and weight of initial geometries with the optimized configurations. It will be shown how small deviations from a feasible initial design can result in nonconvergence of the optimization problem.

The problem to be solved is as follows:

- Design the minimum weight leaf springs of a suspension system that will provide protection to the mass of 3,200 lb at a frequency of 2.2 Hz with a factor of safety of 1.4. The maximum G-load (load magnification) that will occur during the ascent and/or descent mission is 2.63.

The first step is to determine the required spring rate for each spring (cantilever beam). From equation (3), one finds

$$k_t = f^2 4\pi^2 m = (2.2)^2 4\pi^2 \frac{3{,}200}{386.4} = 1{,}582.41 \text{ lb/in} \quad . \tag{44}$$

Since the isolation system has been designed such that the springs under design are all in parallel, one can obtain the spring rate for each beam by dividing the total spring rate by the total number of beams (in this case 4). Thus, the spring rate for each beam is

$$k_s = \frac{k_T}{N_{sp}} = \frac{1{,}582.41}{4} = 395.6 \text{ lb/in} \quad . \tag{45}$$

The next step is to determine the maximum load per beam. This will be done by including the G-load and factor of safety in the calculations,

$$P_s = \frac{W_{SSE} G(FOS)}{N_{sp}} = \frac{(3{,}200)(2.63)(1.4)}{4} = 2{,}946 \text{ lb} \tag{46}$$

where

W_{SSE} = the total weight to be isolated

G = the G-load

FOS = the factor of safety

N_{sp} = the number of springs.

Finally, the maximum deflection of the beam under the design load can be calculated from the definition of spring rate of a beam

$$\delta_{max} = \frac{P_s}{k_s} = \frac{2{,}946}{395.6} = 7.45 \text{ in} \quad . \tag{47}$$

The beam dimensions obtained during the preliminary design phase are found in figure 4. Figures 5 and 6 show deflection and stress plots of this design. Inspection of the data shows that the maximum deflection of this beam with the applied load is 6.75 in and the maximum bending stress is 102,630 psi. If the material selected for the beam is titanium Ti-6Al-4V (allowable bending stress 104,000 psi and Young's modulus of 16E6), one can see that the stress constraint is met. The deflection, however, yields a spring rate of 436 lb per inch, a difference of 10.2 percent from the desired 395.6 lb per inch. This difference results in a natural frequency of 2.31 Hz, a difference of 5.0 percent from the desired 2.20 Hz. This error is equal to the goal of 5.00 percent allowable variation from the design, therefore, the preliminary design configuration was deemed acceptable.

The author will now proceed to design the beam using the SPTRIAL and SPOPT programs.

Table 3 shows the input information required by SPTRIAL.

SPTRIAL is a program to obtain initial feasible designs. It does, however, require that the user have knowledge of the effects of changing certain variables. For example, the thickness ratio has a greater effect on the maximum stress than the length-to-width ratio for a given deflection. This means that if a design is close to a desired deflection but the stresses are slightly above the allowable, it is recommended to change the length-to-width ratio (instead of the thickness ratio) to modify stresses without significantly affecting the stiffness of the beam. The program aims toward a desired deflection by varying the initial thickness ratio. The stresses for several width ratios (w_e/w_o) are printed along with the weight of the beam and comments on whether the stresses exceed the allowable. The author has noted, however, that generally the designs that result from SPTRIAL are accepted by SPOPT to yield adequate final designs which meet both the stress and deflection constraints.

Table 4 shows a listing of the results from SPTRIAL using the input data from table 3.

Table 5 is a listing of the input data required by SPOPT. The sample data shown is from the first initial design of table 4.

Table 6 shows the output listing from SPOPT for a typical optimization run. In the case shown, the input data from table 5 were used. The majority of the output listing is from the DOT optimizing code with exception to the stress and deflection values for the optimized beam.

Even though SPTRIAL greatly helps in the selection of initial values for the optimization process, it cannot guarantee convergence to a feasible design every time. Table 7 shows the optimized results obtained for various initial designs as generated by SPTRIAL. Notice that there were still two cases where no feasible design was obtained. This could possibly be corrected by modifying some internal control parameters within DOT, but, due to the fairly consistent values of the optimized weights, it was felt that modifications would not improve the results greatly.

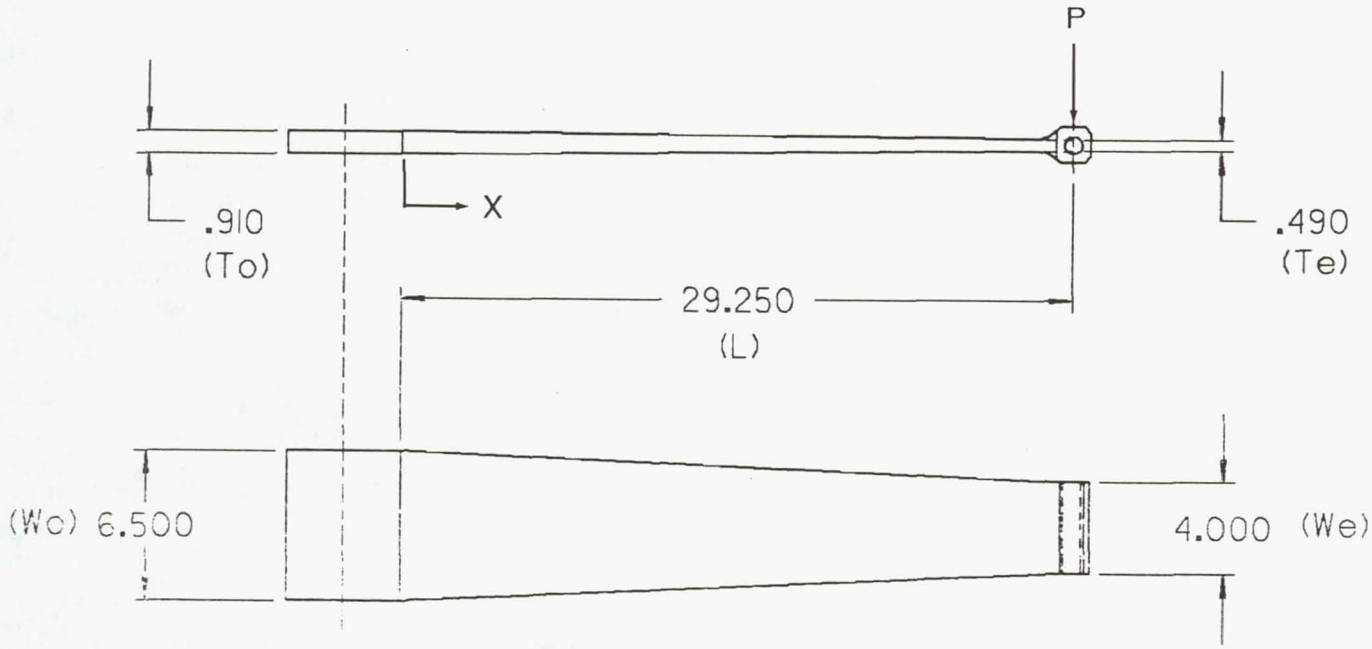

Figure 4. Initial leaf spring design configuration (half length).

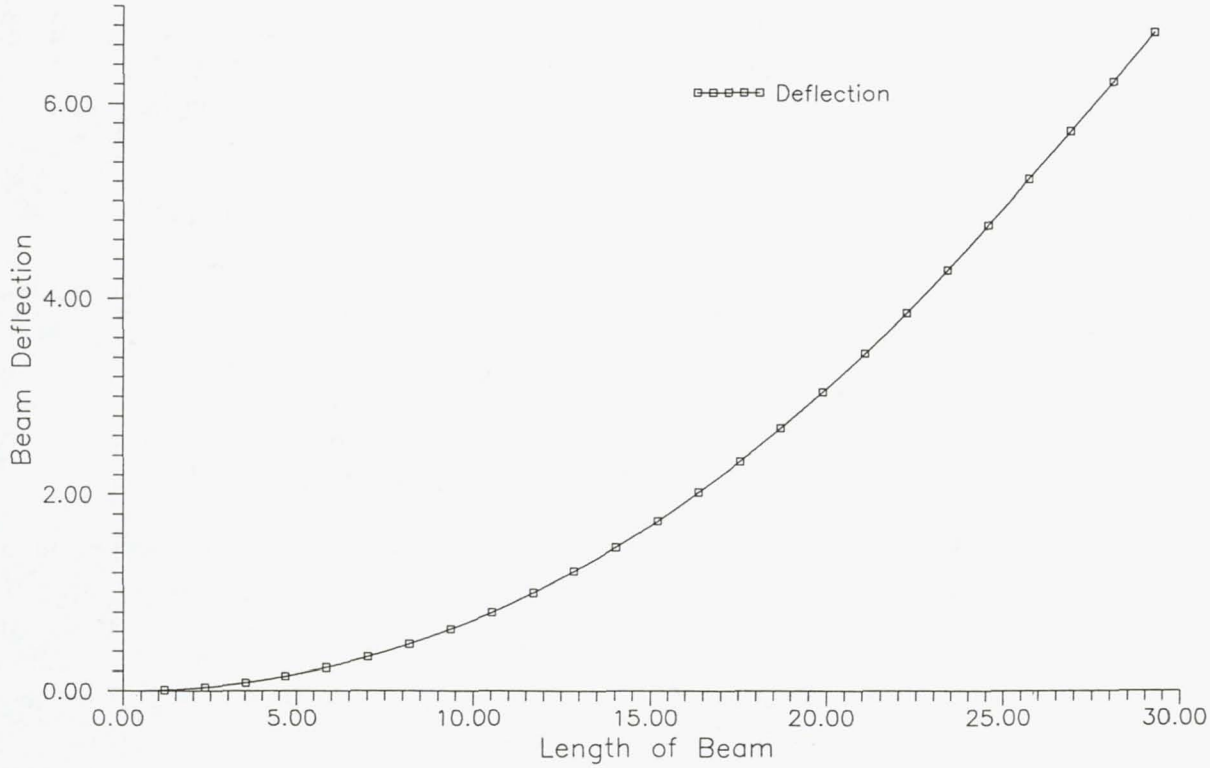

Figure 5. Deflection distribution for initial leaf spring design.

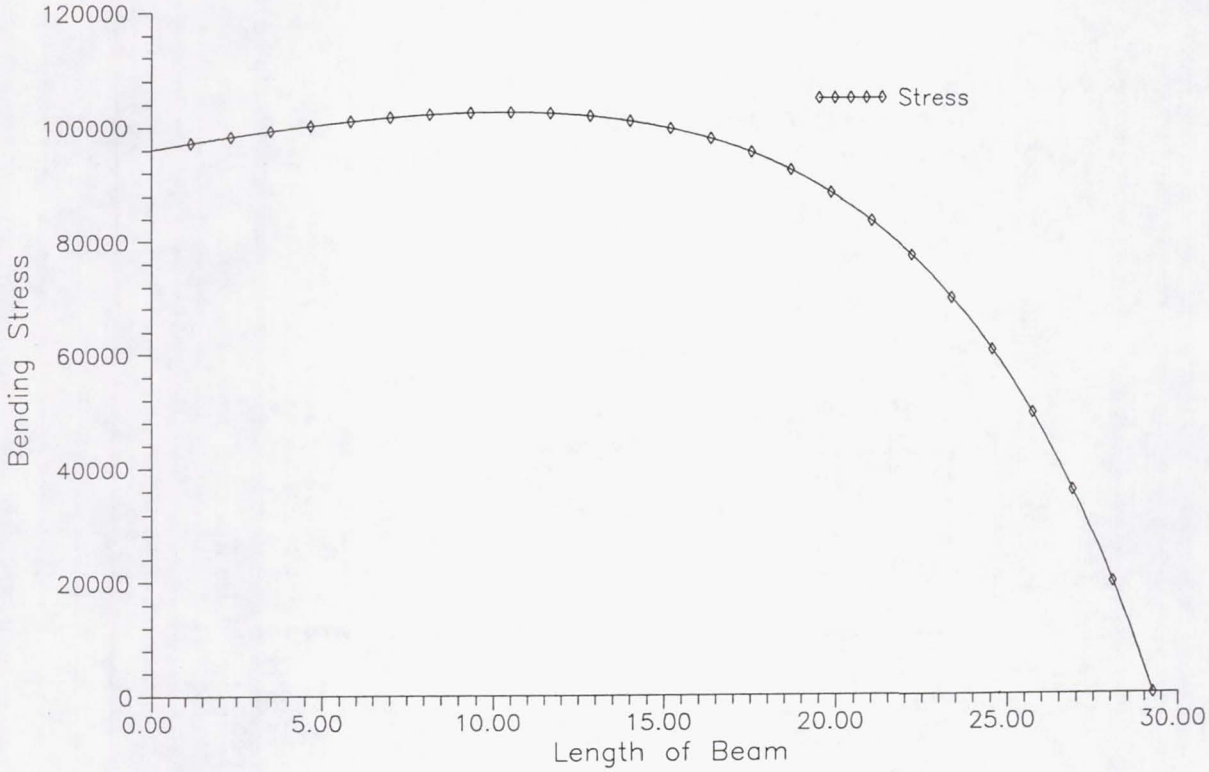

Figure 6. Stress distribution for initial leaf spring design.

Table 3. Sample of input data required by SPTRIAL.

Enter allowable stress	104,000 psi
Enter Young's modulus	16E6 psi
Enter applied load	2.946 lb
Enter beam length	29.25 in
Enter beam density	0.16 lbm/in^3
Enter maximum deflection	7.45 in
Enter initial guess for thickness ratio	0.55*
Enter length-to-width ratio	4.5†

* The thickness ratio is the main variable used in SPTRIAL to obtain the desired spring rate. Values between 0.5 and 0.75 are recommended as first guesses. SPTRIAL will vary this quantity as necessary to obtain the desired deflection.

† During the derivation of the Euler-Bernoulli beam equation, a major assumption is that the beam have a fairly slender geometry [1]. The recommended minimum length-to-width ratio is 4.5 where the width is taken as the average between the widths at the free and fixed locations.

Table 4. Output listing from SPTRIAL.

```
THE INITIAL GUESS FOR THE CROSS SECTIONAL AREA
AT THE BASE (THICKEST PART) OF THE TAPERED BEAM IS:
WIDTH =  6.500 & THICKNESS =   .905

THE DEFLECTION FOR A CONSTANT X-SECTION BEAM
WITH THESE DIMENSIONS IS  3.828

THE MAX. STRESS FOR A CONSTANT X-SECTION BEAM
WITH THESE DIMENSIONS IS  97159.832

THE FOLLOWING RESULTS WILL INDICATE THE COMBINATIONS OF WE, WO, TE, AND TO
THAT PRODUCE THE DESIRED DEFLECTION WITHIN +/- 5%.  AT THE END OF
EACH RUN, MESSAGE STATEMENTS MIGHT APPEAR RECOMMENDING MODIFICATIONS
TO A PREVIOUS RUN IN ORDER TO INCREASE ACCURACY.  THE SLOPE VALUES ARE GIVEN
IN RADIANS AND INDICATE THE SLOPE OF THE BEAM AT THE TIP WHERE THE
DEFLECTION IS GREATEST.

*****************************************************************************

DEFLECTION     WE          WO          TE          TO          STRESS     SLOPE
.73948E+01 .65000E+01 .65000E+01 .35061E+00 .90480E+00 .10227E+06 .46892E+00

THE WEIGHT OF THE BEAM WITH THESE DIMENSIONS IS  19.095
*****************************************************************************

*****************************************************************************

DEFLECTION     WE          WO          TE          TO          STRESS     SLOPE
.73751E+01 .48750E+01 .65000E+01 .40716E+00 .90480E+00 .10647E+06 .46173E+00

THE WEIGHT OF THE BEAM WITH THESE DIMENSIONS IS  17.776
*****************************************************************************

*****************************************************************************

DEFLECTION     WE          WO          TE          TO          STRESS     SLOPE
.73800E+01 .32500E+01 .65000E+01 .47502E+00 .90480E+00 .11157E+06 .46007E+00

THE WEIGHT OF THE BEAM WITH THESE DIMENSIONS IS  16.285
*****************************************************************************

*****************************************************************************

DEFLECTION     WE          WO          TE          TO          STRESS     SLOPE
.73674E+01 .16250E+01 .65000E+01 .56550E+00 .90480E+00 .11808E+06 .46425E+00

THE WEIGHT OF THE BEAM WITH THESE DIMENSIONS IS  14.622
*****************************************************************************


****** SOME OR ALL STRESSES EXCEED THE ALLOWABLE ******
****** TRY INCREASING THE INITIAL THICKNESS RATIO ******
```

Table 5. Sample of input data required by SPOPT.

Enter the beam length	29.25 in
Enter initial guess for w_e	6.50 in*
Enter initial guess for w_o	6.50 in
Enter initial guess for t_e	0.3506 in
Enter initial guess for t_o	0.9048 in
Enter material density	0.16 lbm/in^3
Enter allowable stress	104,000. psi
Enter desired deflection	7.45 in
Enter applied load	2.946 lb
Enter Young's modulus	16E6 psi

* In order to preclude computational difficulties arising from design cases where w_e is equal to w_o, and when t_e is equal to t_o; SPOPT adjusts the input information to eliminate the possibility of a singularity. For this case, w_e is set equal to 6.4999 without significantly affecting accuracy.

It should be noticed from table 7 that all the initial designs meet the deflection constraint of 7.45 in within approximately 0.050. The stress constraints, however, are violated many times but this does not preclude convergence to a relative optimum. This indicates that the initial designs need not be feasible in order for the problem to converge. All final designs were within 0.015 in of the desired deflection, and the stresses were within 0.5 percent of the desired stress.

Figures 7 through 10 show the convergence history of the optimum design variables, optimum deflection, optimum stress, and minimum weight, respectively, for the initial design beam of figure 4. Notice that the final weight is approximately 1 lb heavier than the initial design (table 7). Increases to the base dimensions w_o and t_o were made by DOT in order to obtain a solution closer to the constraints without significantly violating them.

It is interesting to find out what the optimum configuration would be if manufacturing (i.e., material availability) or allocated space restrictions were included in the optimization routine. In figure 11 it has been assumed that the only titanium available with the desired properties is a plate with a thickness of 0.930 in. If 0.020 in is allowed for machining, this means that the maximum material thickness available is 0.910. It has also been assumed that, due to space restrictions (i.e., to prevent interference with adjacent hardware), the maximum width allowable is 6.50 in. These limitations are very close to actual restrictions during the preliminary design effort and limit the

Table 6. Output listing from SPOPT (DOT optimizer).

```
DDDDD        OOOOO        TTTTTTT
D   D       O    O          T
D   D  ==   O  *  O  ==     T
D   D       O    O          T
DDDDD        OOOOO          T

   DESIGN OPTIMIZATION TOOLS


      (C) COPYRIGHT, 1985-89

ENGINEERING DESIGN OPTIMIZATION, INC

   ALL RIGHTS RESERVED, WORLDWIDE

          VERSION  2.00


 - YOUR INTEGRITY IS OUR COPY PROTECTION -


CONTROL PARAMETERS

OPTIMIZATION METHOD,                  METHOD =  1
NUMBER OF DECISION VARIABLES,            NDV =  4
NUMBER OF CONSTRAINTS,                  NCON =  3
PRINT CONTROL PARAMETER,              IPRINT =  2
GRADIENT PARAMETER,                    IGRAD =  0
  GRADIENTS ARE CALCULATED BY DOT
       XL( 1)   .999   XU( 1)  9.999
       XL( 2)  1.000   XU( 2) 10.000
       XL( 3)   .250   XU( 3)  1.499
       XL( 4)   .250   XU( 4)  1.500


-- SCALAR PROGRAM PARAMETERS

REAL PARAMETERS
  1) CT     = -3.00000E-02          8) DX2    =  1.30000E+00
  2) CTMIN  =  5.00000E-03          9) FDCH   =  1.00000E-03
  3) DABOBJ =  1.90948E-02         10) FDCHM  =  1.00000E-04
  4) DELOBJ =  1.00000E-03         11) RMVLMZ =  4.00000E-01
  5) DOBJ1  =  1.00000E-01         12) DABSTR =  0.00000E+00
  6) DOBJ2  =  3.81895E+00         13) DELSTR =  1.00000E-03
  7) DX1    =  1.00000E-02

INTEGER PARAMETERS
  1) IGRAD  =   0     6) NCOLA  =   8     11) IPRNT1 =   0
  2) ISCAL  =   4     7) IGMAX  =   0     12) IPRNT2 =   0
  3) ITMAX  =  40     8) JTMAX  =  20     13) JWRITE =   0
  4) ITRMOP =   2     9) ITRMST =   2
  5) IWRITE =   7    10) JPRINT =   0


   STORAGE REQUIREMENTS
ARRAY  DIMENSION  REQUIRED
  WK       800        202
 IWK       200         81


-- INITIAL VARIABLES AND BOUNDS

LOWER BOUNDS ON THE DECISION VARIABLES (XL-VECTOR)
   1)   9.99000E-01   1.00000E+00   2.49900E-01   2.50000E-01

DECISION VARIABLES (X-VECTOR)
   1)   6.49999E+00   6.50000E+00   3.50610E-01   9.04800E-01

UPPER BOUNDS ON THE DECISION VARIABLES (XU-VECTOR)
   1)   9.99900E+00   1.00000E+01   1.49900E+00   1.50000E+00


-- INITIAL FUNCTION VALUES

OBJ =   19.095

CONSTRAINT VALUES (G-VECTOR)
   1)  -8.39152E-03  -1.63831E-02   6.40629E-03


-- BEGIN CONSTRAINED OPTIMIZATION: MFD METHOD


-- ITERATION    1     OBJ = 1.88950E+01

DECISION VARIABLES (X-VECTOR)
   1)   6.42979E+00   6.36565E+00   3.64799E-01   8.98225E-01


-- ITERATION    2     OBJ = 1.83597E+01

DECISION VARIABLES (X-VECTOR)
   1)   6.21285E+00   6.17197E+00   3.39267E-01   9.28420E-01
```

Table 6. Output listing from SPOPT (DOT optimizer) (continued)

```
-- ITERATION    3     OBJ = 1.83597E+01

DECISION VARIABLES (X-VECTOR)
   1)   6.21285E+00   6.17197E+00   3.39267E-01   9.28420E-01


-- ITERATION    4     OBJ = 1.83597E+01

DECISION VARIABLES (X-VECTOR)
   1)   6.21285E+00   6.17197E+00   3.39267E-01   9.28420E-01



-- OPTIMIZATION IS COMPLETE

NUMBER OF ITERATIONS =    4

CONSTRAINT TOLERANCE, CT = -5.00000E-03

THERE ARE    3 ACTIVE CONSTRAINTS AND    0 VIOLATED CONSTRAINTS
CONSTRAINT NUMBERS
    1    2    3

THERE ARE    0 ACTIVE SIDE CONSTRAINTS

TERMINATION CRITERIA

RELATIVE CONVERGENCE CRITERION WAS MET FOR  2 CONSECUTIVE ITERATIONS

ABSOLUTE CONVERGENCE CRITERION WAS MET FOR  2 CONSECUTIVE ITERATIONS


-- OPTIMIZATION RESULTS


OBJECTIVE, F(X) =    1.83597E+01


DECISION VARIABLES, X

   ID        XL            X            XU
    1    9.99000E-01   6.21285E+00   9.99900E+00
    2    1.00000E+00   6.17197E+00   1.00000E+01
    3    2.49900E-01   3.39267E-01   1.49900E+00
    4    2.50000E-01   9.28420E-01   1.50000E+00


CONSTRAINTS, G(X)

   1)   7.91281E-04   4.36377E-03  -2.79490E-03


FUNCTION CALLS =    46

******* THE DEFLECTION FOR THE OPTIMIZED BEAM IS ******* 7.46416
******* THE STRESS FOR THE OPTIMIZED BEAM IS ******* 104429.
```

Table 7. Optimization results for various initial designs.

Design	w_e	w_o	t_e	t_o	Weight	Def	Stress	Iteration
Initial	6.500	6.500	0.351	0.905	19.095	7.395	102,270	
Final	6.213	6.172	0.339	0.928	18.360	7.464	104,429	46
Initial	4.875	6.500	0.407	0.905	17.776	7.375	106,470	
Final	5.193	7.002	0.402	0.878	18.593	7.435	104,516	66
Initial	3.250	6.500	0.475	0.905	16.285	7.380	111,570	
Final	3.520	8.122	0.493	0.817	18.422	7.459	104,022	71
Initial	4.000	6.500	0.490	0.910	17.609	6.750	102,630	
Final	4.245	7.730	0.467	0.829	18.662	7.460	104,470	109
Initial	5.850	5.850	0.286	0.995	17.541	7.427	108,890	
Final	***** No Feasible Design Was Obtained *****							
Initial	4.388	5.850	0.336	0.995	16.321	7.472	115,660	
Final	5.294	6.977	0.390	0.884	18.610	7.436	104,472	88
Initial	2.925	5.850	0.411	0.995	15.100	7.368	121,600	
Final	***** No Feasible Design Was Obtained *****							
Initial	1.463	5.850	0.498	0.995	13.624	7.407	133,830	
Final	1.516	8.799	0.625	0.767	17.203	7.438	104,517	111

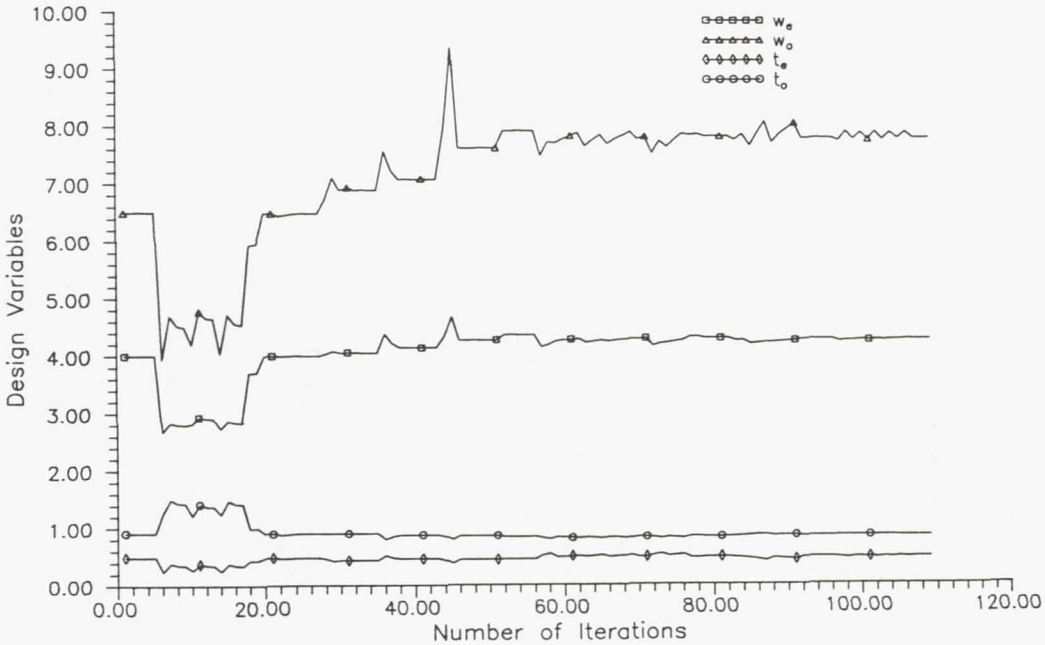

Figure 7. History of design variables versus number of iterations.

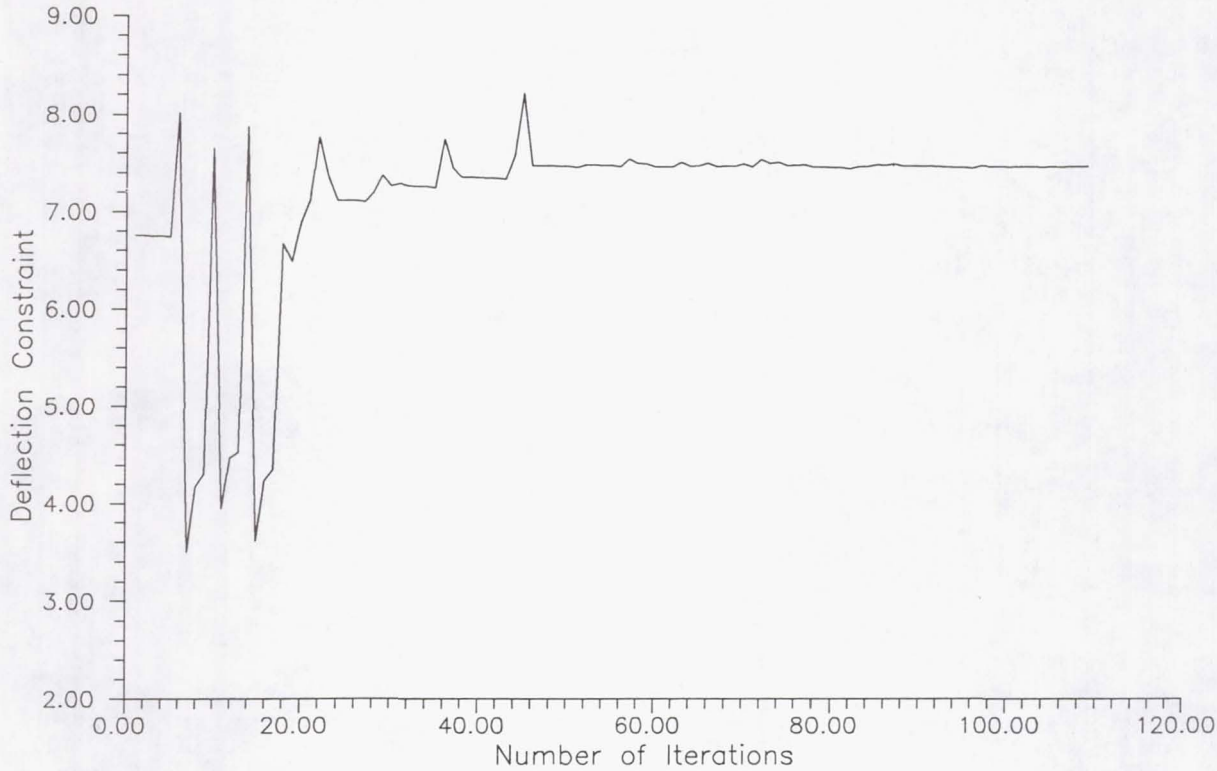

Figure 8. History of deflection constraint versus number of iterations.

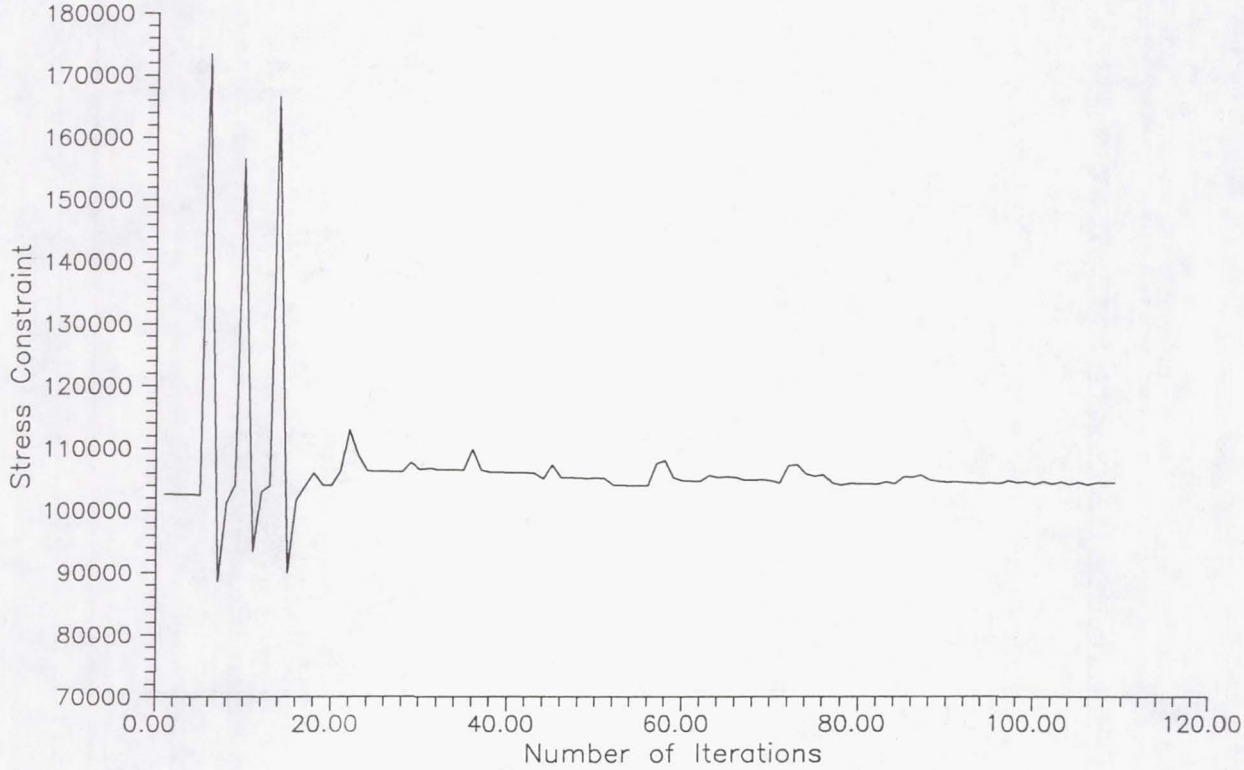

Figure 9. History of stress constraint versus number of iterations.

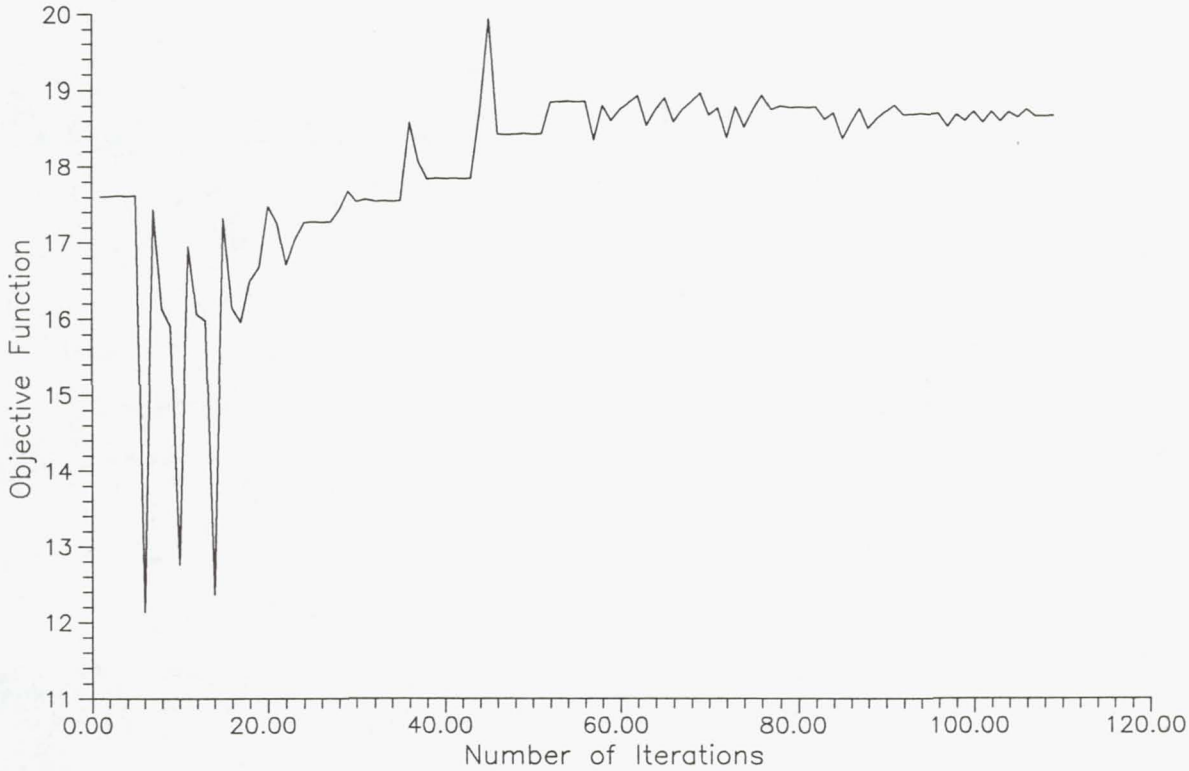

Figure 10. History of weight versus number of iterations.

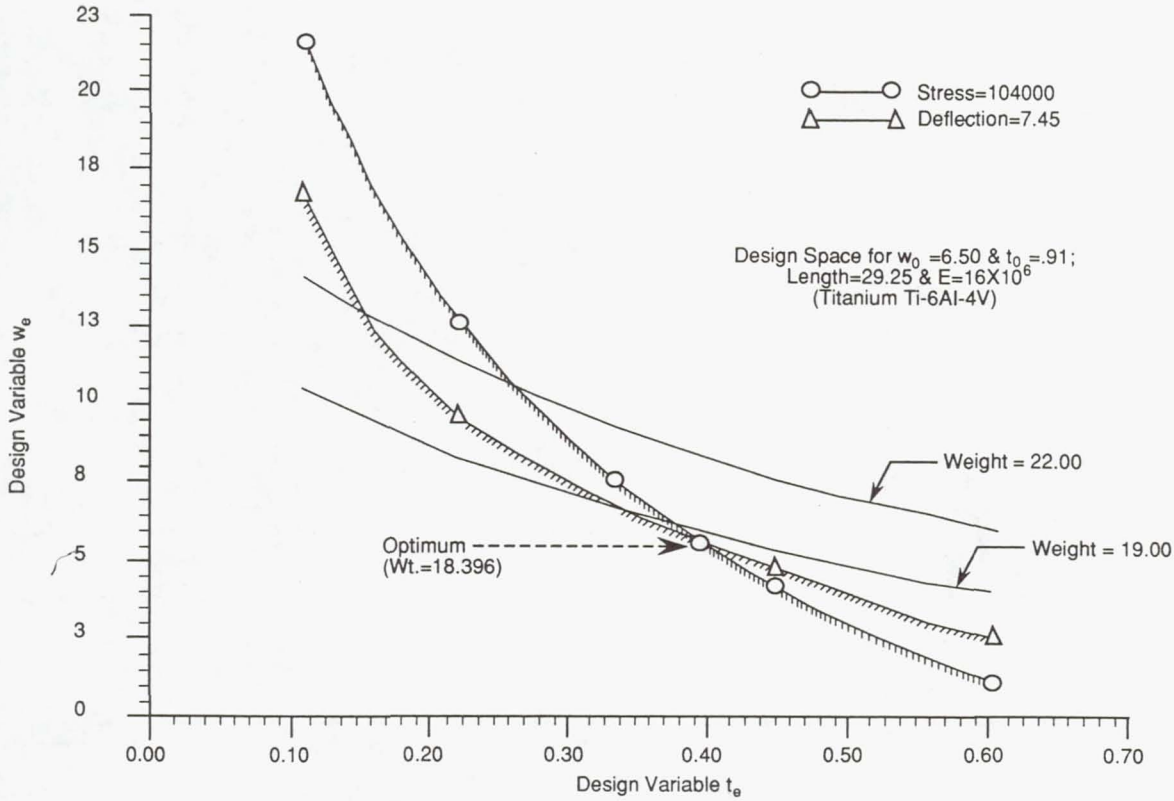

Figure 11. Design space for leaf spring with additional side constraints.

number of potential optimum solutions. However, it can be seen that the weight is essentially the same as the optimum solution from table 7 (18.662 lb), and a good improvement toward meeting the desired deflection and stress constraints is obtained. The minimum weight under these conditions is 18.664 lb with the following parameters:

w_c – 6.09 in
w_b – 6.50 in
t_c – 0.351 in
t_b – 0.910 in
Deflection – 7.46 in
Stress – 103,950 psi.

TEST RESULTS

Once the preliminary design was completed and a geometry selected, a spring was manufactured from 6061-T6 aluminum alloy to verify the configuration. Since the final configuration was to be manufactured out of an expensive titanium alloy, the decision to proceed would be based on the outcome of this test.

The test parameters were as follows:

- Maximum load per cantilever – 800 lb
- Maximum expected deflection – 2.934 in
- Maximum expected stress – 27,868 psi
- Expected spring rate – 273 lb/in.

Strain gauge and displacement indicator locations for the test hardware were as indicated in figure 12. Test procedures and results are in references 8 and 9. Pertinent information is summarized below:

- Maximum applied load – 800 lb
- Maximum measured deflection – 3.052 in
- Maximum measured stress – 27,160 psi*
- Measured spring rate – 262 lb/in.

*It should be noted that the maximum measured stress was obtained at gauge number 4 in figure 12 (9.5 in from the clamped edge). The actual calculated location of maximum stress is at 10.38 in from the clamped edge. The calculated stress at 9.5 in is 27,850 psi, a difference of 2.47 percent.

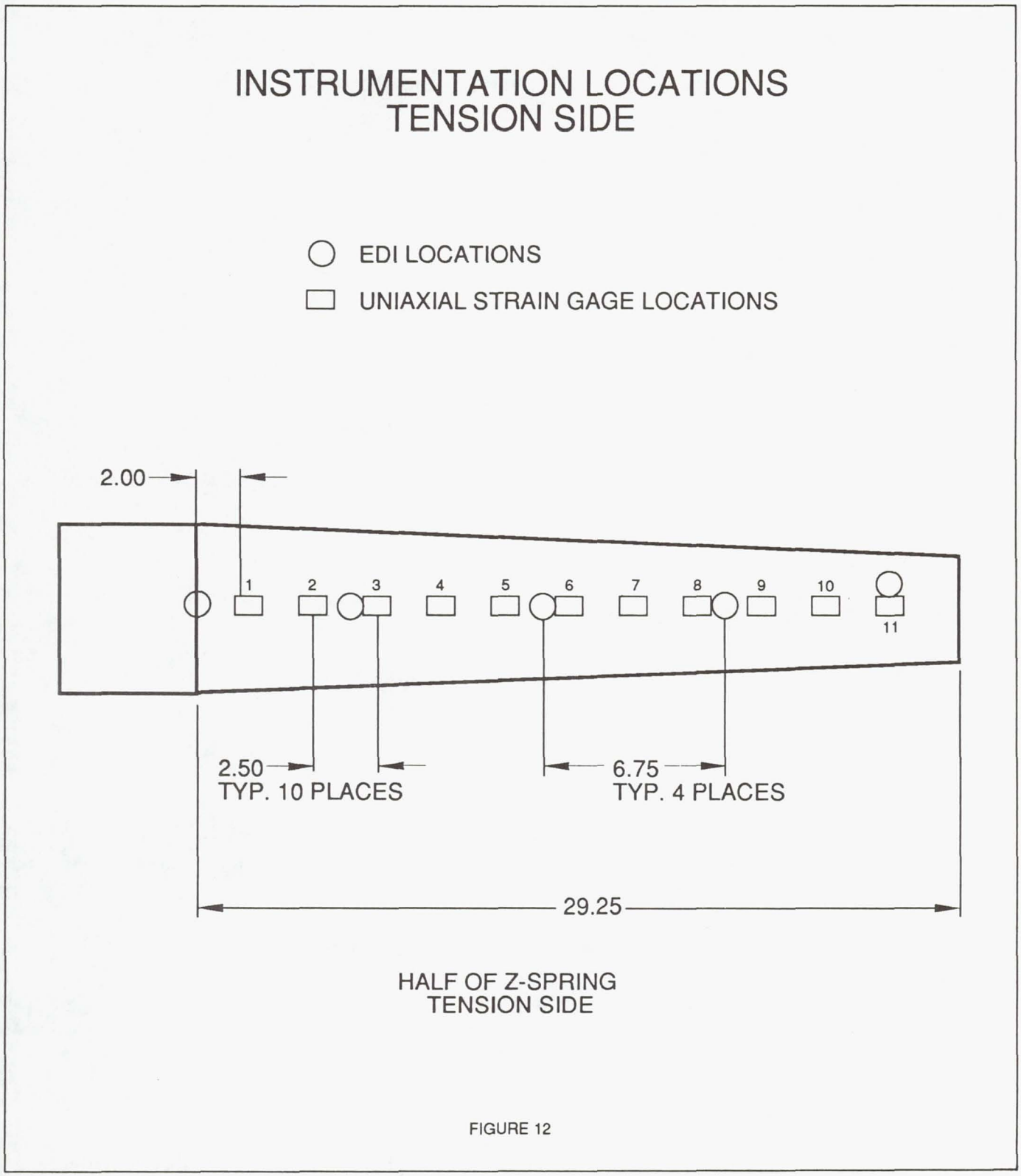

Figure 12. Location of deflection and strain gauges.

Figure 13 shows the predicted versus the test values of the deflection for the aluminum test beam.

CONCLUSIONS

The results of this study show that although time consuming trial-and-error iterations were performed during the initial design of the leaf springs for the HST/SSE, the resulting design was very near an optimum design for the configuration analyzed. The study also shows that with the availability of personal computer-based optimization software, fairly complicated problems can be handled with fast solutions and reliable final designs. It is interesting to point out that constraints and limitations such as material availability and possible interference with adjacent hardware can be included in the optimization procedure as mathematical constraints on the numerical minimization problem.

It is important to note that although the derivation of the deflection equations for the spring was based on small deflections, comparison with nonlinear finite element solutions show that for the range of deflections required, the difference between both solutions is acceptable. Care must be exercised in order to justify the linear approximation for applications with larger deflections.

The time has come for design engineers to take advantage of the powerful tools available for developing lightweight and structurally sound hardware. All that is required is the desire to learn and the awareness that the state-of-the-art is advanced by inquisitive minds.

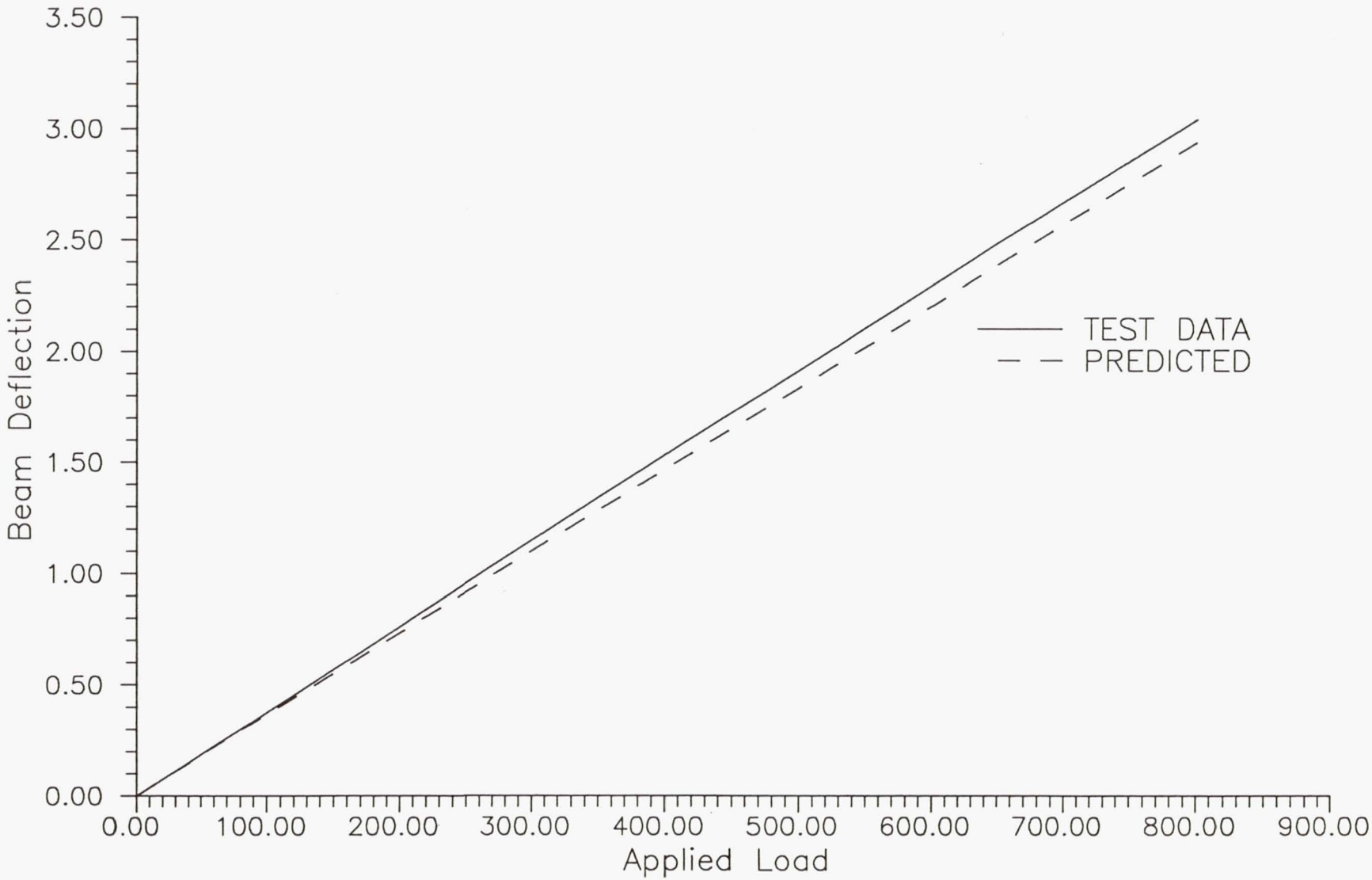

Figure 13. Test results for leaf spring (6061-T6 aluminum).

REFERENCES

1. Meirovitch, L.: "Analytical Methods in Vibrations." The MacMillan Company, London, 1967.

2. SAE HS J788: "Manual of Design and Application of Leaf Springs." Society of Automotive Engineers, Pennsylvania, 1982.

3. Timoshenko, S.: "Strength of Materials." D. Van Nostrand Co., April 1955.

4. Haftka, R.T., and Kamat, M.P.: "Elements of Structural Optimization." Martinus Nijhoff Publishers, Massachusetts, 1985.

5. Kirsch, U.: "Optimum Structural Design." McGraw-Hill Book Company, New York, 1981.

6. Venkayya, V.B., and Khot, N.S.: "Structural Optimization, Structural Mechanics Computer Programs." University Press of Virginia, Charlottesville, Virginia, 1974.

7. Vanderplaats, G.N.: "Numerical Optimization Techniques for Engineering Design." McGraw-Hill Book Company, New York, 1984.

8. Hill, K.A.: Interoffice Memorandum ET52 (86-10), Space Telescope Document Number ST-DEV-ET86-029, Aluminum Z-Spring, NASA/MSFC, Huntsville, Alabama, April 9, 1986.

9. Hill, K.A.: Interoffice Memorandum ET52 (86-15), Space Telescope Document Number ST-DEV-ET86-029, Aluminum Z-Spring, NASA/MSFC, Huntsville, Alabama, April 25, 1986.

NASA
National Aeronautics and Space Administration

Report Documentation Page

1. Report No.	2. Government Accession No.	3. Recipient's Catalog No.
NASA TM-4233		

4. Title and Subtitle	5. Report Date
Minimum Weight Design of a Leaf Spring Tapered in Thickness and Width for the Hubble Space Telescope-Space Support Equipment	September 1990
	6. Performing Organization Code
7. Author(s)	8. Performing Organization Report No.
P.I. Rodriguez	
	10. Work Unit No.
	M-645
9. Performing Organization Name and Address	11. Contract or Grant No.
George C. Marshall Space Flight Center Marshall Space Flight Center, Alabama 35812	
	13. Type of Report and Period Covered
12. Sponsoring Agency Name and Address	Technical Memorandum
National Aeronautics and Space Administration Washington, DC 20546	14. Sponsoring Agency Code

15. Supplementary Notes

Prepared by Structures and Dynamics Laboratory, Science and Engineering Directorate.

16. Abstract

A linear elastic solution to the problem of minimum weight design of cantilever beams with variable width and depth is presented. The solution shown is for the specific application of the Hubble Space Telescope maintenance mission hardware. During these maintenance missions, delicate instruments must be isolated from the potentially damaging vibration environment of the space shuttle cargo bay during the ascent and descent phases. The leaf springs are designed to maintain the isolation system natural frequency at a level where load transmission to the instruments is a minimum.

Nonlinear programming is used for the optimization process. The weight of the beams is the objective function with the deflection and allowable bending stress as the constraint equations. the design variables are the width and depth of the beams at both the free and the fixed ends.

17. Key Words (Suggested by Author(s))	18. Distribution Statement
leaf springs, nonlinear programming, linear elastic	Unclassified – Unlimited Subject Category: 39

19. Security Classif. (of this report)	20. Security Classif. (of this page)	21. No. of pages	22. Price
Unclassified	Unclassified	40	A03

NASA FORM 1626 OCT 86

For sale by the National Technical Information Service, Springfield, VA 22161-2171

NASA-Langley, 1990