ROBOT ARM MODELING AND CONTROL

PRECEDING PAGE BLANK NOT FILMED

N90-29876

APPLICATION OF RECURSIVE MANIPULATOR DYNAMICS TO HYBRID SOFTWARE/HARDWARE SIMULATION

Christopher J. Hill
Lockheed Engineering Services Company, Houston, Texas
Kenneth A. Hopping
Boeing Electronics Company, Bellevue, Washington
Charles R. Price
NASA, Johnson Space Center, Houston, Texas

ABSTRACT

Computer simulations of robotic mechanisms have traditionally solved the dynamic equations of motion for an N degree-of-freedom manipulator by formulating an N dimensional matrix equation combining the accelerations and torques (forces) for all joints. This paper describes the use of an alternative formulation that is strictly recursive. The dynamic solution proceeds on a joint by joint basis, so it is possible to perform inverse dynamics at arbitrary joints. The dynamics formulation is generalized with respect to both rotational and translational joints, and is also directly extendable to branched manipulator chains.

This paper describes a hardware substitution test in which a servo drive motor was integrated with a simulated manipulator arm. The form of the dynamics equation permits calculation of acceleration given torque or vice-versa. Computing torque as a function of acceleration is required for the hybrid software/hardware simulation test described. For this test, a joint servo motor is controlled in conjunction with the simulation, and the dynamic torque on the servo motor is provided by a load motor on a common driveshaft.

INTRODUCTION

The Manipulator Emulator Testbed (MET) is a simulation facility designed to support concept studies, evaluation and other engineering development activities for a variety of manipulator configurations. In particular, the testbed is intended to support development of simulations of the Space Station Freedom Remote Manipulator System and related systems.

One of the problems faced by the users of simulators for a space robot is that the models used to simulate the behavior of the robot do not always simulate the real robot perfectly. It is desirable during model development to have manipulator components and subject them to realistic loading to assist in verification of the simulations. One goal of the MET is to provide a facility for comparing models with actual hardware component performance. The test described was developed to demonstrate the feasibility of using

PRECEDING PAGE BLANK NOT FILMED

a software simulation to provide a realistic environment while controlling a real servo motor.

The first implementation of this concept involved attaching the MET to a motor test bed.

TEST ARM CONFIGURATION

The present test was devised to demonstrate the capability of integrating a real motor with a simulated arm. A simple configuration for developing this capability is a two-link planar arm with rotational joints. A two-link arm is the minimum configuration that will show link interaction effects.

The arm used for the testing is depicted in Figure 1. The motor substitution is performed on the base joint, so the outboard joint is always simulated.

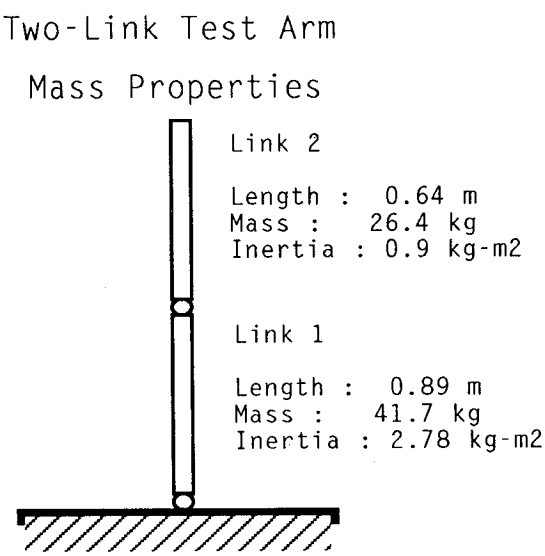

Figure 1

The test case used for the tests described was to start the arm in a "straight out" configuration, as shown in Figure 1, with initial rate of zero. The servos were commanded to produce a joint rate of 0.03 rad/sec.

MOTOR TEST BED

The motor test bed includes two small DC servo motors mounted on a common shaft. These motors are referred to as the "drive" motor and the "load" motor. The drive motor is the motor that simulates the joint servo motor on the physical arm. The load motor provides a

load on the drive motor that emulates the load that would be "felt" by that motor in a real arm.

The motor test bed also includes an analog interface board mounted in the host computer, and power and signal conditioning amplifiers. The motors are driven by independent linear amplifiers. The load motor amplifier is set up as a current-controlled amplifier where the output current (and therefore shaft torque) is proportional to the control voltage. The drive motor amplifier is voltage-controlled.

The motor shaft rotation rate is read and fed back to the controlling computer. The shaft rate passes through a second-order low-pass filter to minimize noise. It may be desirable to provide other feedback, in particular, shaft acceleration, but this capability is not currently provided in the testbed.

THE MANIPULATOR EMULATOR TESTBED SIMULATION

The Manipulator Emulator Testbed (MET) is a generic manipulator simulation designed to be modular and expandable. A high-level flowchart describing the MET simulation is presented in Figure 2.

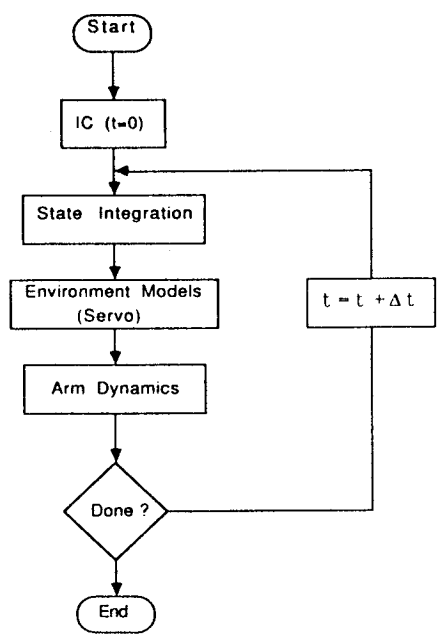

The MET Simulation

Figure 2

The Initial Conditions (IC) preprocessor used in the MET uses a syntax much like the "C" Programming Language preprocessor. Use of the preprocessor allows the user to tailor the input form to the database describing the arm being analyzed.

The integration scheme used is the Modified Euler method.

A recursive rigid-link arm dynamics model (G. Nasser) was developed for use in the MET.

"Environment" models can include servo models, plume impingment models, Coriolis models and other external influences on the arm dynamics. The only environment model used for this testing is the Servo model. The servo model takes the joint state and joint rate commands as input and produces either applied joint torque or joint acceleration as output.

For this testing, the MET was configured to run on a single PC/AT, although parallel computation configurations are also available.

INVERSE DYNAMICS

One of the features of the recursive dynamics used is the capability of performing inverse dynamics at a particular joint. The motor substitution test apparatus feeds back motor shaft rate to the simulation. This rate is differentiated numerically to obtain shaft acceleration. The inverse dynamics is used to link this shaft acceleration with the rest of the arm dynamics. At the substituted joint, the joint torque is in essence computed as a function of the arm configuration and acceleration, rather than the inverse as is normally done.

Nasser's basic equation for link dynamics is:

$$L_i U_i = F_i \tag{1}$$

where:

$$U_i = \begin{pmatrix} U_i^R \\ \ddot{\theta}_i \end{pmatrix} \tag{2}$$

If instead we define:

$$U_i = \begin{pmatrix} U_i^R \\ \tau_i \end{pmatrix} \tag{3}$$

then:

$$L_i = I_{6x6}$$

and:

$$U_i = F_i = A^{\star}_{i,i-1} \begin{bmatrix} \vartheta_{i,i-1} \\ \omega_{i,i-1} \end{bmatrix} + B^{\star}_{i,i-1} \tag{4}$$

This relation is used in the Motor Substitution Test to provide the load that would be imposed on the joint drive motor by the arm, and to use this load to command the load motor.

RIGID GEARBOX SERVO

In the interest of keeping computational requirements for this testing to a minimum, a simple servo model was selected. The name "Rigid Gearbox" arose to distingush this model from the compliant gearboxes used in analyses of the Space Shuttles' Remote Manipulator System. The Rigid Gearbox servo model consists of a proportional-integral servo controller, a dc motor with internal resistance, a torque constant and back-emf. The voltage applied to the drive motor and the torque output have limits applied.

The torque on the motor output shaft is multiplied by the gear ratio and supplied to the dynamics.

A block diagram of the Rigid Gearbox Servo is depicted in Figure 3. The values used in the model are listed in Table 1.

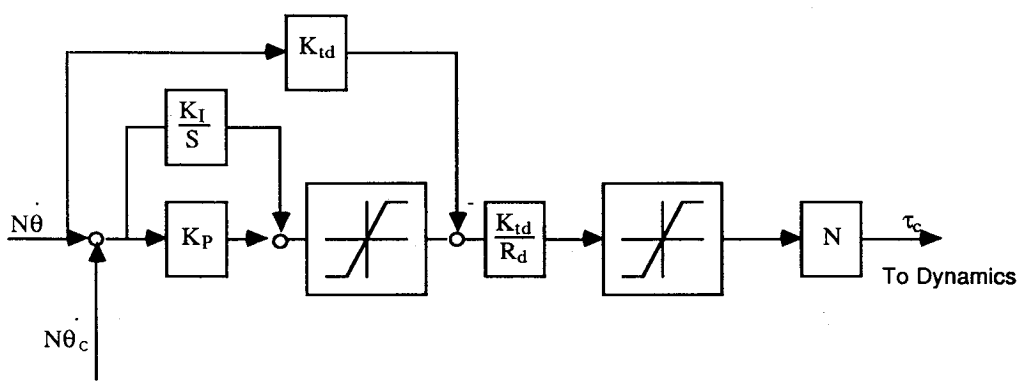

Rigid Gearbox Servo

Figure 3

TABLE 1

N	Gearbox Ratio	1570
Kp	Proportional Error Gain	0.020 V/rad/s
Ki	Integral Error Gain	0.125 V/rad
Vlim	Voltage Limit (Both Motors)	20.0 V
Rd	Drive Motor Resistance	2.05 Ohm
Ktd	Drive Motor Torque Const.	0.061 N-m/Amp
Tlim	Torque Limit	0.144 N-m
Jm	Combined Motor Shaft Inertia	6.38e-5 N-m-m
Wo	Cut-off Frequency	50 Hz.
Ktl	Load Motor Torque Constant	0.072 N-m/A
	Coulomb Friction Coefficient	0.0205 N-m
	Viscous Friction Coefficient	2.58e-5 N-m

MOTOR SUBSTITUTION SERVO

The motor substitution servo is designed to behave similarly to the rigid gearbox servo, while incorporating the effects of the dynamics into the load motor. A block diagram of the motor substitution servo is presented in Figure 4. The parameters used are listed in Tables 1 and 2.

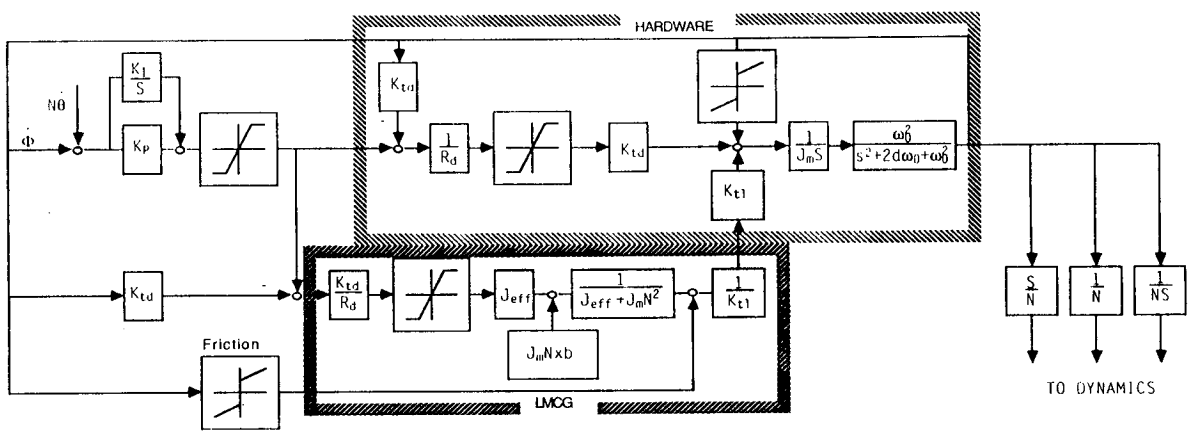

Motor Substitution Servo

Figure 4

Both the drive motor and the load motor are driven in this model. The term "drive motor" is used to denote the replaced servo motor, and "load motor" denotes the motor used to apply the equivalent arm load onto the drive motor.

A proportional-integral controller identical to that used in the rigid servo model is used to provide voltage commands to the drive motor. The upper dashed-outline block of Figure 4 represents both motors, the common shaft joining them, their amplifiers and the motor rate filter.

The torque constant, armature resistance, and friction values of both motors were experimentally determined. The friction model used is a combined Coulomb and viscous model, which represents the behavior of the motors fairly well. Both motors are considered with a single set of friction values, rather than being considered separately. The amplifier used on the load motor accepts a current command, so the armature resistance of this motor was not determined.

The load motor command generator computes the load that is applied to the joint drive servo.

Dynamics of motor shaft:

$$J_m\ddot{\phi}_m=\tau_d+\tau_l \tag{5}$$

where:

τ_d = drive motor torque

τ_l = load motor torque

Rigid Gearbox:

$$\ddot{\phi}=N\ddot{\theta} \tag{6}$$

Noting that $\left(A^*_{i,i-1}\right)$ elements 0,6 thru 5,6 are 0, we define:

$$J_{eff}=-\left(A^*_{i,i-1}\right)_{66} \tag{7}$$

and:

$$b=-\left(B^*_{i,i-1}\right)_6 \tag{8}$$

Load torque:

$$N\tau_l = -J_{eff}\ddot{\theta} - b \tag{9}$$

Solving eqns (5) and (9), we obtain:

$$\tau_l=\frac{-1}{N^2J_m+J_{eff}}\left(J_{eff}\tau_d+J_mNb\right) \tag{10}$$

The motor torque divided by the combined motor inertia gives actual motor shaft acceleration. The analog tachometer is used to read shaft rate, which passes through a second-order low-pass filter. The filtered shaft rate is integrated to determine motor shaft position, and differentiated to determine motor shaft acceleration. The position, velocity and acceleration are then divided by the gearbox ratio and fed directly into the arm state

The servo runs at a higher execution frequency than the arm dynamics. Generally, the servo is run at 100. Hz while the arm dynamics are updated at 25 Hz.

MOTOR SUBSTITUTION SIMULATION

The motor substitution simulation was developed to test the concepts used for the motor substitution servo. The hardware components of the motor substitution servo are simulated in software. The filter is simulated using a second-order Butterworth filter.

RESULTS

Several plots are presented showing joint rate response of the simulated test arm and the substitution arm in Figures 5-8.

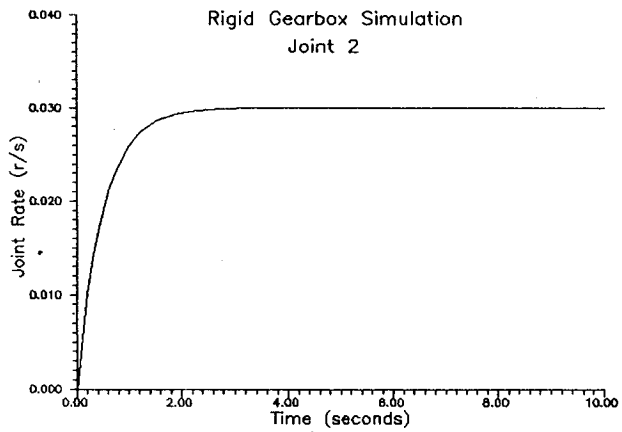

Figure 5

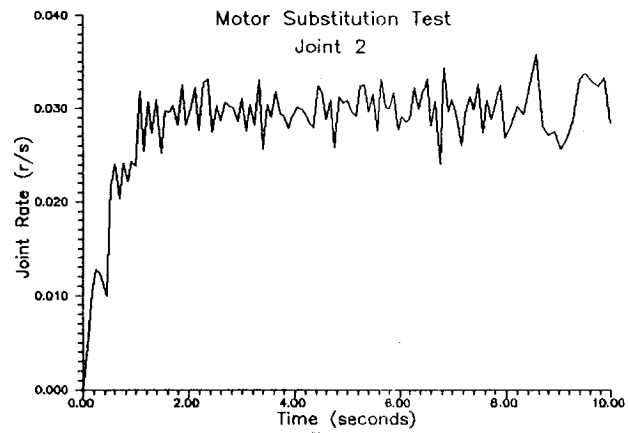

Figure 7

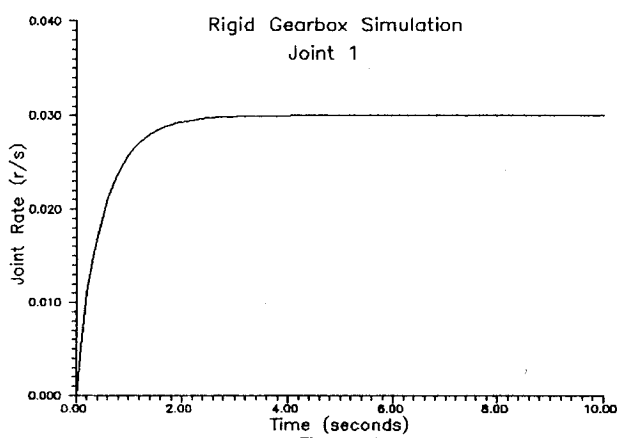

Figure 6

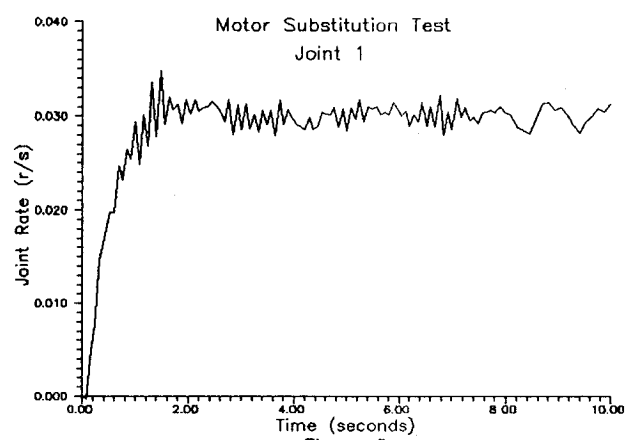

Figure 8

Figures 5 and 6 show the response of the first and second joint in the "pure" simulation configuration. Figures 7 and 8 show the comparable data for the hybrid simulation case, with Joint 1 substituted, and Joint 2 simulated, as before.

In general, there is good agreement between the simulation response and the response of the hardware substitution data. There is some noise-induced oscillation apparent in the hardware substitution plots. Sources of the noise include mis-alignment of the motor shafts, unevenness of the torque with rotation, and rate sensor noise. Oscillations in the first (hardware) joint excite oscillations in the second (software) joint, as expected.

ORIGINAL PAGE IS
OF POOR QUALITY

CONCLUSIONS

One of the more troublesome aspects of the testing described was the use of numerical differentiation, which is highly susceptible to high-frequency noise. In future tests of this type, it would be desirable to use rotational accelerometers to measure shaft acceleration directly. It is planned to use faster computing hardware in future testing. This should allow the use of 6- or 7-jointed arms, and should allow for performing motor shaft dynamics at a significantly higher frequency. For this facility to be useful for Space Station arm simulation, it is anticipated that the servo loop will be required to run in 1 or 2 milliseconds, or approximately 5 to 10 times faster than is currently possible.

Most significant, though, is that this test demonstrates that it is possible to interface hardware with a simulation. The authors believe that this capability will significantly enhance our ability to accurately simulate the behavior of space robots.

ACKNOWLEDGMENTS

The authors would like to acknowledge the support and valuable assistance of John Chladek, Donald Barron and Carl Adams of NASA/JSC. Richard Theobald and Benjamin Bourgeois (LESC) also provided invaluable assistance in developing servo models, as well as guidance and support. Karl Zimmer (NASA), who developed the hardware testbed described, deserves special acknowlegment, as does George Nasser (LESC), who developed the dynamics model used.

REFERENCES

1. Nasser, G., "A Recursive Newton-Euler Formulation of Manipulator Dynamics", NASA Conf. on Space Telerobotics, Jan 89, Pasadena, Calif.

2. Hopping, K. A., and Widjaja, D., "Manipulator Emulator Test Bed Geometry Model", Lockheed-EMSCO paper for NASA / Systems Development and Simulation Division, Engineering Directorate, January 1988.