Space Station Evolution
Beyond the Baseline

SSF Growth Concepts & Configurations

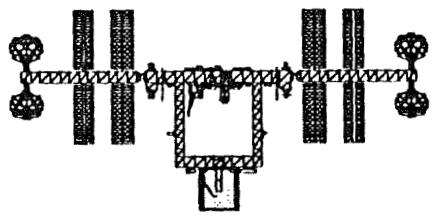

William M. Cirillo
NASA Langley Research Center
SSFO/APO
August 7, 1991

N92-17414
PRECEDING PAGE BLANK NOT FILMED
PAGE 448 INTENTIONALLY BLANK

OBJECTIVES

There are three primary objectives for the Space Station Freedom (SSF) Growth Concepts and Configurations study task.

The first objective is the development of evolutionary SSF concepts consistent with user requirements and program constraints. In the past this objective has been met by defining separate evolution growth concepts for the support of different classes of user missions, such as multidisciplinary research and development concepts and Space Exploration Initiative (SEI) transportation node concepts. The approach that is now being used is to derive the full set of user mission requirements for both R&D and SEI and integrate them into one set of SSF evolution concepts, referred to as continued development phases.

A detailed discussion of SSF user requirements and an overview of the methods used to derive the requirements for the restructured SSF is provided in a paper by Kevin Leath, Rudy Saucillo, and Karen Brender entitled, "Evolution User Requirements for the Restructured Space Station" enclosed in this volume. The final results of their analysis conclude that independent of which user mission model (SEI or R&D) is used, the total end user requirements are nearly identical. The results indicate that approximately 150 kW of power, a crew of 13-14, and additional laboratory volume equivalent to the first U.S. Laboratory module are required to meet future user needs. In addition, orthogonal growth structure is required to support SSF systems and user needs.

The second primary objective is to ensure the feasibility of the proposed SSF evolution concepts at the system level. This includes, but is not limited to, an assessment of SSF evolution flight control analysis, logistics assessment, maintainability, and operational considerations.

The final objective is to ensure compatibility of the baseline SSF design with the derived evolution requirements at both the system and element (habitat modules, power generation equipment, etc.) levels.

PRECEDING PAGE BLANK NOT FILMED
PAGE 450 INTENTIONALLY BLANK

SSF Evolution Configuration Assessment

Objectives

- Develop evolutionary concepts for Space Station Freedom consistent with user requirements and program constraints
- Ensure feasibility of evolution concepts at the system level (controllability, logistics, maintainability, etc.)
- Ensure compatibility of baseline design with evolution requirements at the system (e.g., configuration) and element (e.g. habitation module) levels

PRODUCTS

The main product of this study is the development of SSF evolution configuration phases and growth hardware elements. Each evolution phase description will provide an overview of functional capabilities, physical characteristics, and performance characteristics. The physical characteristics include the identification of each phases mass, inertias, ballistic coefficient, and center of gravity. Each of these items is used to drive the Langley Research Center's in-house performance analysis tool, IDEAS 2. IDEAS 2 has the capability to perform simulation of vehicle flight dynamics, orbital lifetime, and reboost propellant assessment. In addition, graphic representations of the various evolution concepts are provided to further enhance study and design activities.

The primary source for collection of configuration analysis is the SSF Engineering Data Book, which was developed and is maintained at Langley Research Center.

Another important product of this study is the development of element growth concepts. This includes performing cost and weight trades, assessing the impacts on the baseline design of either incorporating or not incorporating the different growth elements, and performing a preliminary operational assessment. This process will allow the identification of critical scars that need to be included in the baseline SSF design, as well as, provide for an initial input to the subsystem designers for detailed design-for-growth activities.

Products

- Configuration descriptions of evolution phases and growth elements
  - Primary input to the Engineering Data Book and associated data books
  - Groundrule data for distributed systems and operations tasks
- Element growth concepts including cost and weight trades, impacts on baseline design, operational impacts, and impacts of non-inclusion of design accommodations
  - Allows identification of "critical scars" and provides subsystem designers a "running start" on detailed design-for-growth activities

APPROACH AND METHODOLOGY

The approach used to develop the SSF evolution configurations has three primary steps. The first step involves the completion of the individual SSF advanced studies to the point where configuration inputs to the study are critical. As an example, the module pattern trade study which is currently being conducted has several trades, such as node to module interface concerns and remote manipulator reach access, which can be assessed independent of overall SSF configuration design. On the other hand, such trades as module pattern impact on SSF flight attitude and viewing obstruction assessments, can only be performed using an integrated SSF configuration which takes into account the results of other trade studies that are being conducted concurrently.

The second step is integrating all of the trade studies which are currently being conducted into a large number of potential configuration options.

The third step is using a tiered, Figure of Merit (FOM) method to assess all of the possible configuration options. The Figure of Merit method is described in more detail on the following chart.

The final result of the process is the ranked series of configuration options. Several of the top ranked options will be maintained for consideration because of the fact that not all of the mission parameters used in the FOM process have been fully defined at this time and are subject to change with evolving user and mission requirements.

SSF Evolution Configuration Assessment

Approach & Methodology

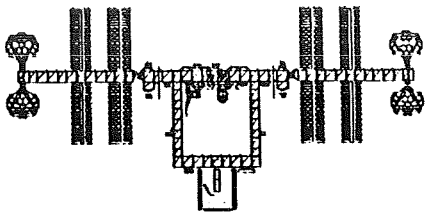

Configuration

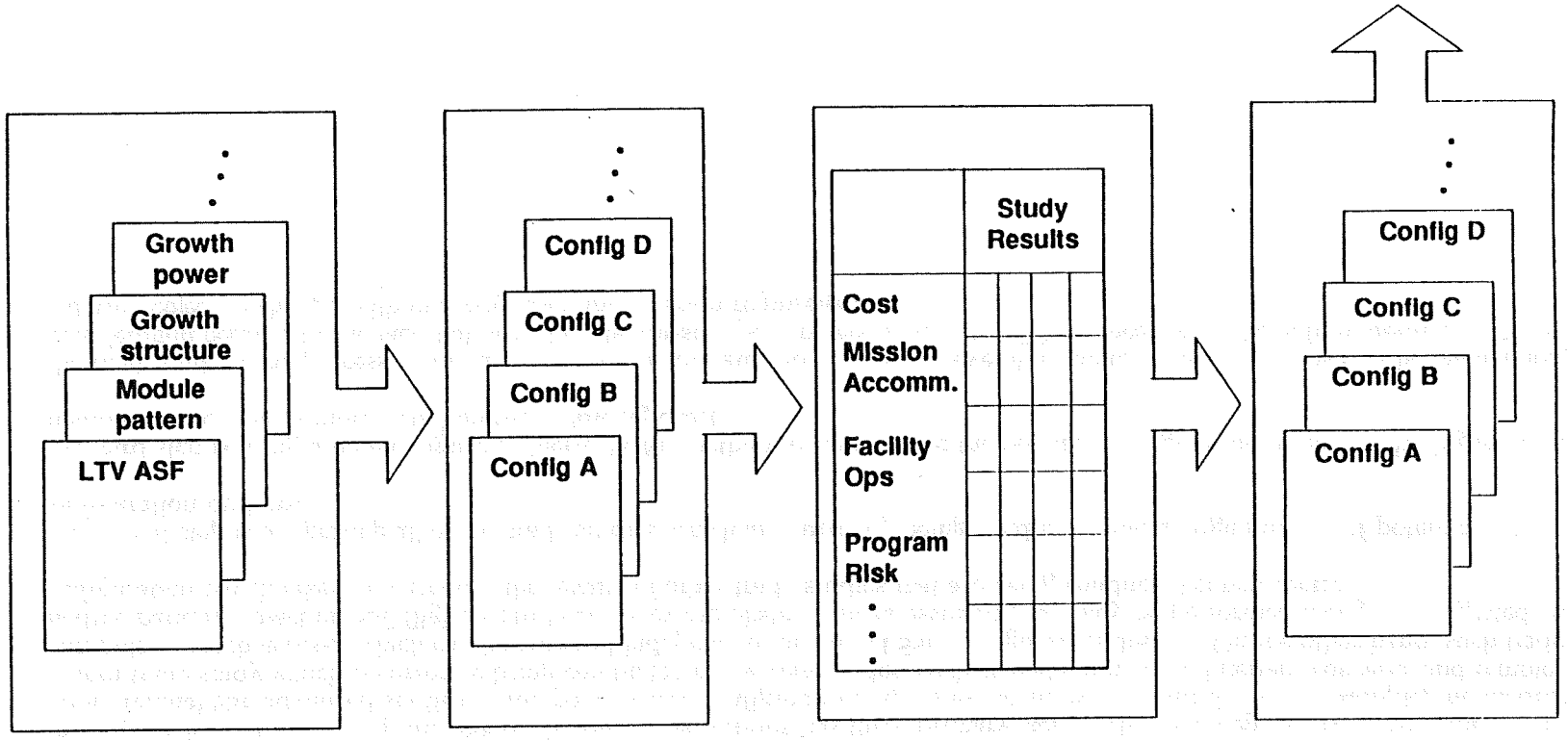

SSF Advanced Studies

Configuration Options

Figures of Merit

Configuration Evaluations

TIERED FIGURES OF MERIT

In order to handle the large trade space that results from the SSF evolution configuration process described earlier a method based on utility theory, which transforms both quantitative and qualitative criteria into non-dimensional utility scale for comparison of dissimilar figures of merit, is chosen. This benefits of this method are that the process is systematic, retraceable in nature, and allows for interaction among the key decisions makers that are involved. The utilization method used in this study consists of he following major steps, (1) identification of the Figures of Merit (criteria); (2) ranking of the criteria in order of importance; (3) weighting of the criteria based on rankings; (4) measuring each SSF evolution concept with respect to the selection criteria and then normalizing; (5) multiplying a set of derived utility values by the criteria weight and summing; (6) ranking the SSF evolution concepts based on the weighted utilities.

A further detailed description of this entire process is provided in a paper by J.E. Hendershot, McDonnell Douglas Space Systems Company, R.R. Corban and S.M. Stevenson, NASA Lewis Research Center, entitled, "Fuel Systems Architecture Evaluation Criteria and Concept Evaluation Methodology", AIAA 91-3479, as part of the AIAA/NASA/OAI Conference on Advanced SEI Technologies, September 4-6, 1991, Cleveland, Ohio.

SSF Evolution Configuration Assessment

Tiered Figures of Merit

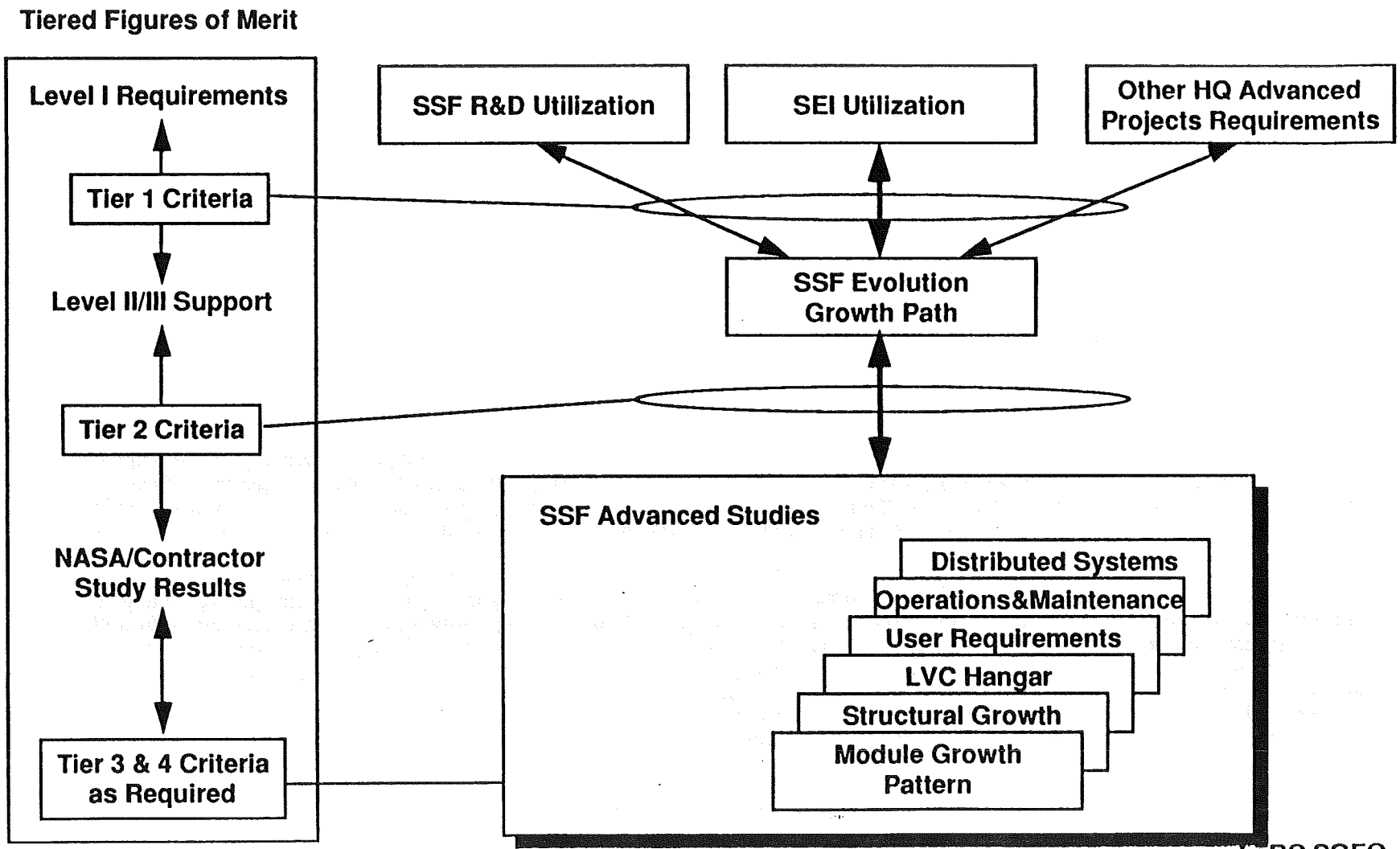

EVALUATION CRITERIA

The Tier 1 and Tier 2 Figures of Merit (Evaluation Criteria) are shown. A detailed discussion of each of the criteria is currently being developed under separate cover.

SSF Evolution Configuration Assessment

Evaluation Criteria

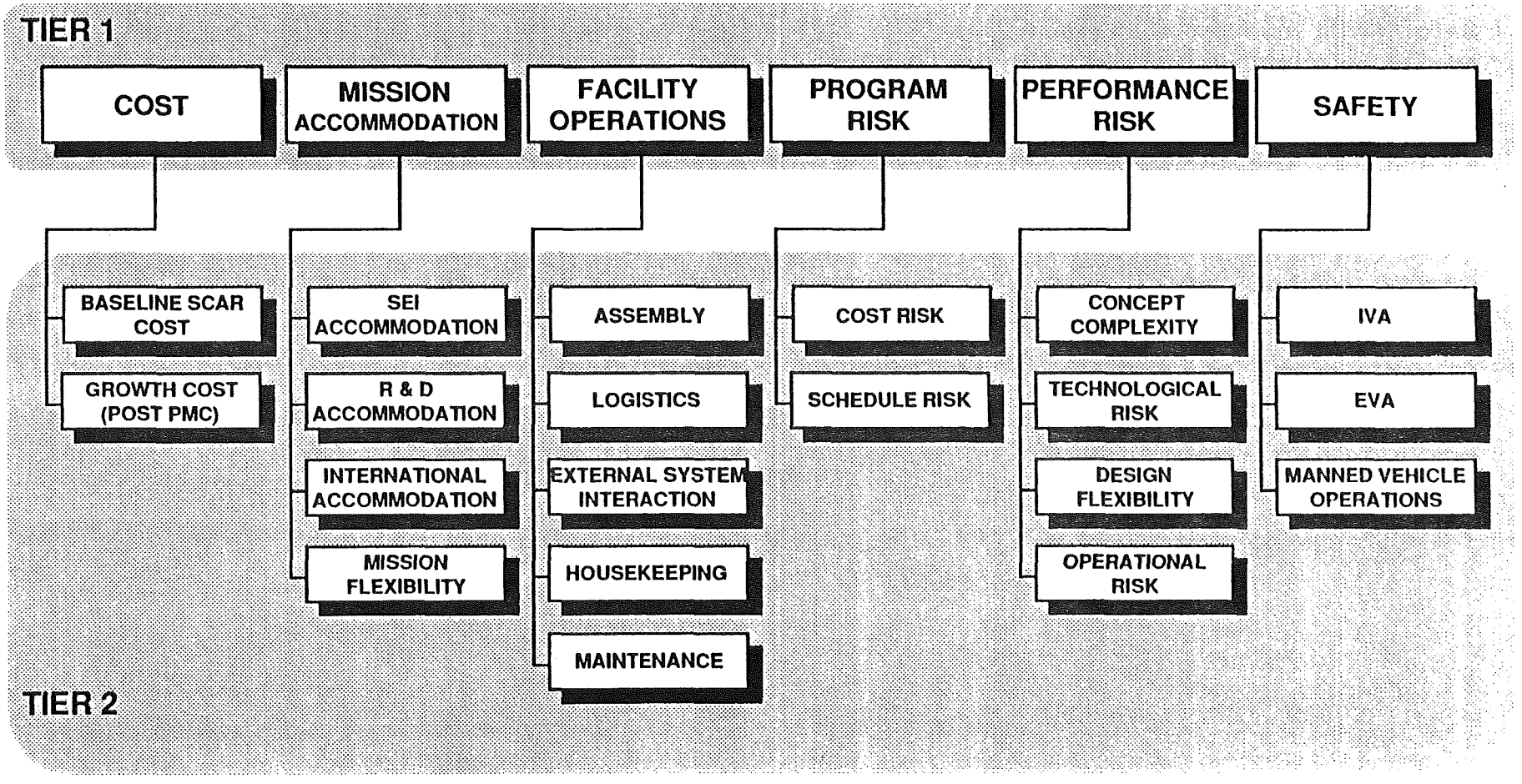

CONFIGURATION DEVELOPMENT

The development of potential SSF evolution configuration candidates involves the inputs of a multitude of on-going SSF trade studies as shown in the accompanying illustration. Four of the trades will be discussed in more detail in the following charts. They are the module pattern study, the life sciences centrifuge facility location study, the growth structure study, and the Lunar Transfer Vehicle (LTV) Assembly Servicing Facility (ASF) study.

At present, most of these studies are on-going, so a final ranking of all of the possible SSF evolution configurations has not been completed. A set of rapid prototype evolution configurations has been developed based on the trades that have been completed to date and are shown at the end of the presentation. These rapid prototype configurations were developed in order to provide a preliminary set of SSF evolution phase concepts to those advanced systems studies that need configurations against which to perform their respective trade studies.

SSF Evolution Configuration Assessment

Configuration Development

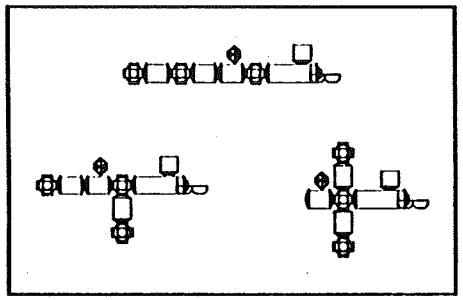

Module Pattern/
Centrifuge

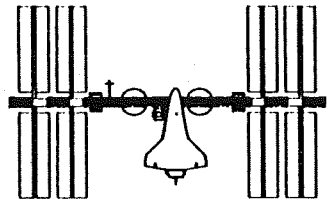

Candidate Evolution
Configurations

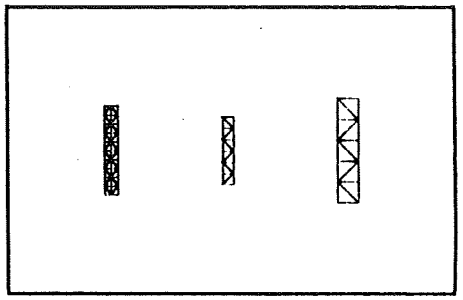

Growth Structure/
Utility Distribution

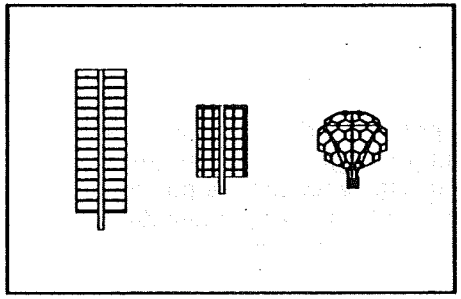

Power Generation

- Operations
- Distributed Systems
- Logistics
- NLS/CTV Interfaces
- Distributed Systems

⋮

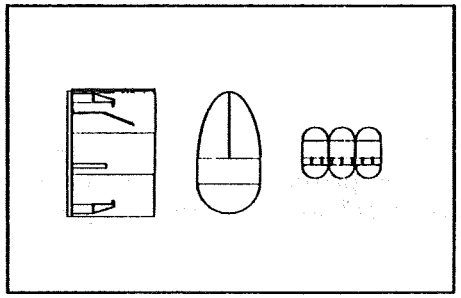

LTV Vehicle
Accommodation

MODULE PATTERN STUDY OBJECTIVES

Based on the number of changes to the baseline SSF configuration that have resulted from the resent SSF Restructuring activity (segmented modules vs. 44 ft., lower total pressurized volume, etc.) it was determined to re-evaluate the SSF evolution module pattern assessment that was performed two years earlier in order to determine the most favorable SSF evolution module pattern. As previously discussed, this trade focuses primarily on module pattern specific issues such as external operations and utility interfaces between module pattern elements. Areas such as flight attitude and viewing will need to take into account other trade study results which involve the use of an integrated SSF evolution configuration concepts.

Module Pattern Growth Concepts

Study Objectives and Restructuring Issues

- **In light of recent SSFP changes, options for module pattern growth are being revisited. Differences from previous trade study include:**
  - Growth from PMC vs. AC
  - Segmented modules vs. 44 ft modules
  - Module addition along transverse boom not possible due to TCS radiator location
  - Lower total pressurized volume requirements
- **Analysis is inititally focusing on *module pattern-specific* issues**
  - External operations including growth pressurized element assembly and Shuttle payload exchange
  - Utility interface and baseline scar requirements
- **After other utilization/configuration issues are resolved; additional analyses will be performed**
  - TEA, momentum management, microgravity environment
  - Viewing
  - Etc.

EVOLUTION MODULE PATTERN

The SSF evolution module pattern shown has been designed to accommodate the SSF utilization resource requirements determined earlier. The evolution module pattern begins with adding one additional habitat and one additional laboratory module, along with two resource nodes, to the PMC module pattern, in the direction of flight. Additionally, a second four man Assured Crew Return Vehicle (ACRV) is added on the zenith side of the starboard growth node.

The next phase of module pattern growth adds two habitat module and two resource nodes in the nadir direction from the baseline resource nodes as illustrated. The two additional nodes allow for attachment locations for the two pressurized logistics carriers which are now required, along with the third and fourth ACRVs.

The benefits of this module pattern over previously studied module patterns is that it provides better viewing of SSF operations from the cupolas, provides additional resource node attach points for future pressurized elements, and requires shorter utility runs for growth elements. This configuration still does solve all of the problems associated with evolution module pattern assembly and operations, but does represent the best configuration to date.

LVC

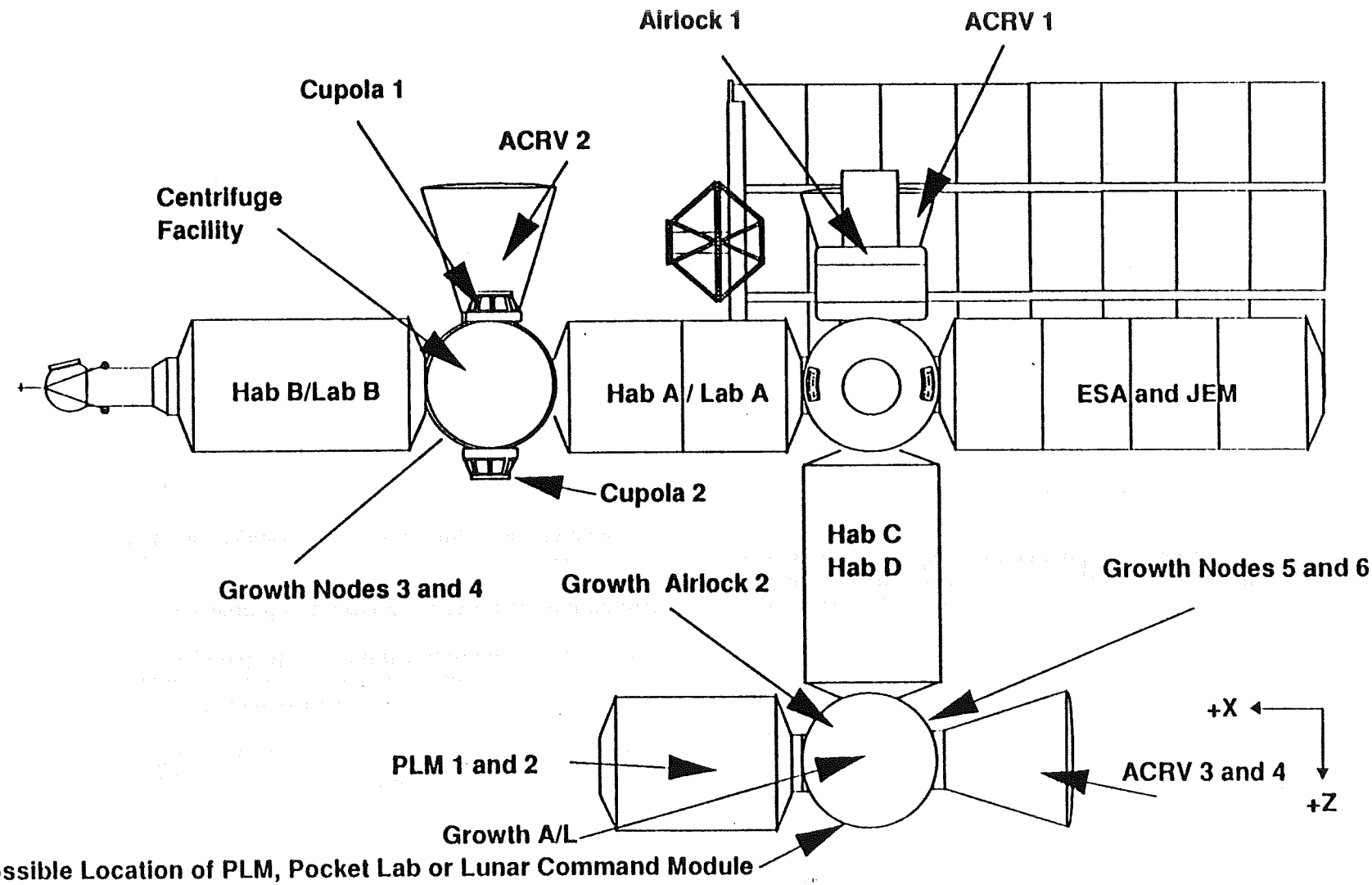
Airlock 1
ACRV 1
Cupola 1
ACRV 2
Centrifuge Facility
Hab B/Lab B
Hab A / Lab A
ESA and JEM
Cupola 2
Hab C
Hab D
Growth Nodes 3 and 4
Growth Airlock 2
Growth Nodes 5 and 6
+X
+Z
PLM 1 and 2
ACRV 3 and 4
Growth A/L
Possible Location of PLM, Pocket Lab or Lunar Command Module

CENTRIFUGE STUDY SCOPE

The purpose of the life sciences centrifuge study is to access the post-PMC accommodation options for a pressurized 2.5 meter centrifuge facility and recommend an implementation with minimum impacts to the baseline program. The study includes an assessment of node accommodation of the centrifuge verse alternative options, attachment location options, and a utility requirements and resource impacts assessment. In addition, the study will identify centrifuge facility drivers and options for the evolution phase module pattern.

Centrifuge Study Scope

- Purpose of study is to assess post-PMC accommodation options and recommend an implementation with minimum impact to the baseline design

  - Node accommodation vs. alternatives
  - Attach location options
  - Utility requirements and resource impacts

- An additional objective is to identify centrifuge facility location drivers/options for the Evolution Phase module pattern

LIFE SCIENCE CENTRIFUGE ACCOMMODATION OPTIONS

In addition to using a common resource node as is currently being proposed, this study investigates using four alternate pressurized facilities as shown. Each of the facilities provides differing amounts of rack space to the user, which is a primary importance to the life science community. A minimum of two double racks is currently required in order to meet the basic life science user requirements. In addition, a number of SSF system racks, based on pressurized volume amount, must be accommodated in each element.

This study is currently undergoing final review. A more complete report detailing the pros and cons of the various options will be available from the LaRC SSFO in the near future.

Life Science Centrifuge Accommodation Options

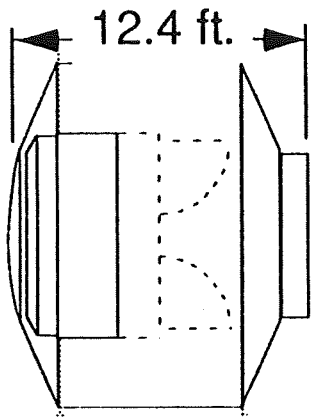

Mini-PLM

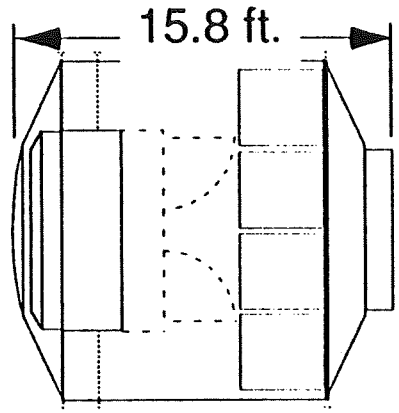

Italian Mini-lab

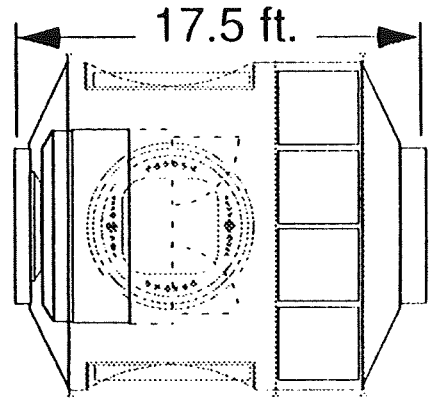

Resource Node

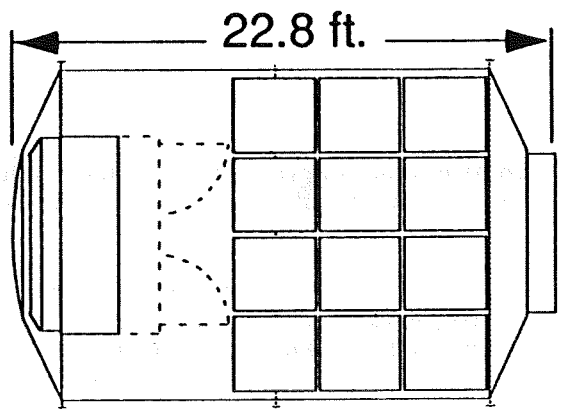

20 Rack PLM

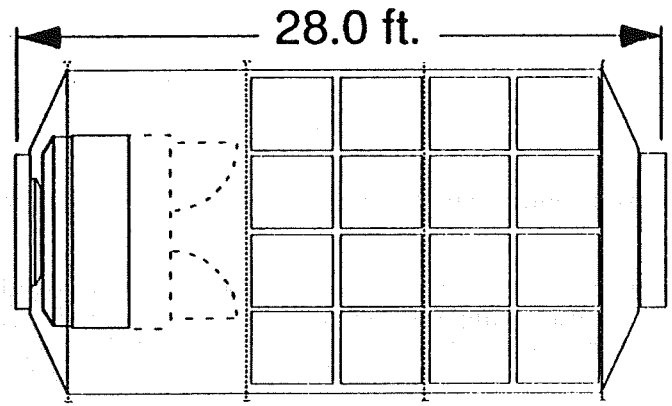

Laboratory Module

LOCATION ISSUES AND OPTIONS OVERVIEW

Several of the issues associated with the various location options are shown.

Location Issues & Options

Overview

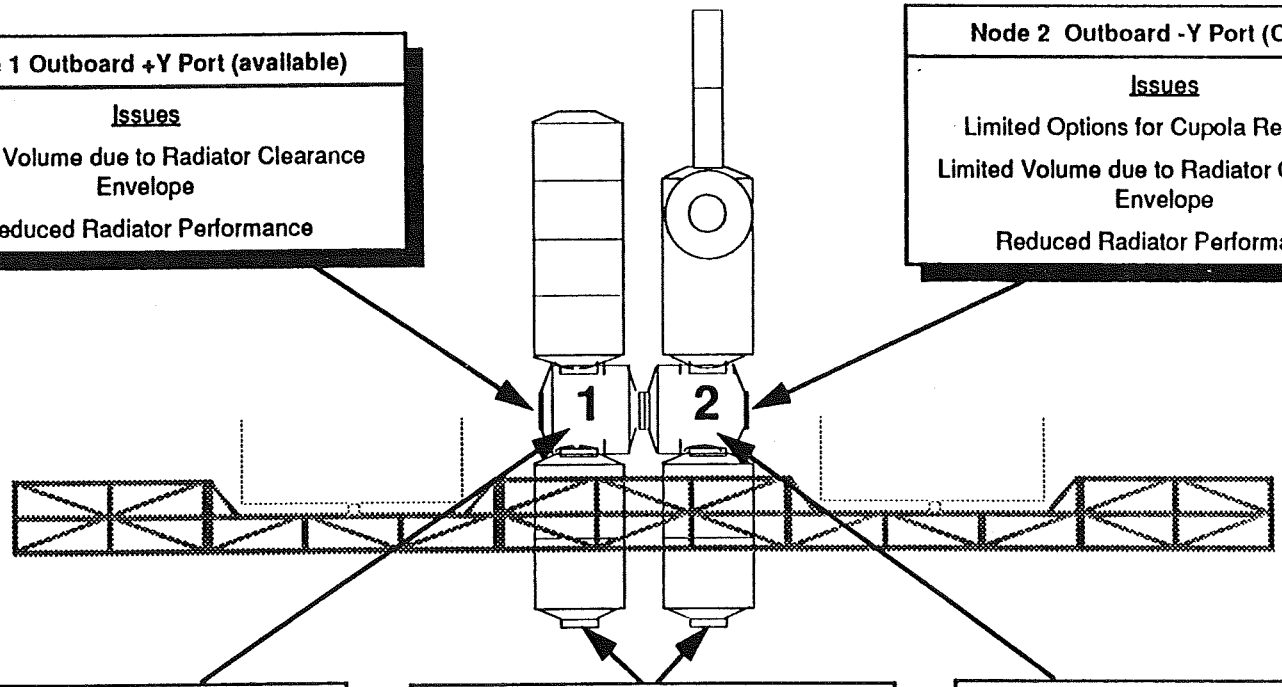

Node 1 Outboard +Y Port (available)

Issues

Limited Volume due to Radiator Clearance Envelope

Reduced Radiator Performance

Node 2 Outboard -Y Port (Cupola)

Issues

Limited Options for Cupola Relocation

Limited Volume due to Radiator Clearance Envelope

Reduced Radiator Performance

Node 1 -Z Port (Airlock)

Issues

No Alternative for Displaced Element

Node 1 +Z Port (PLM)

Issues

Impact to PLM Exchange Operations

Violation of PLM Exchange Requirement

Lab/Hab +X Port (Press Docking Adapters)

Issues

Crew Egress/Passage Requirement Violation

Limited Bio-Isolation

Eliminates Backup Shuttle Docking Location

Node 2 -Z Port (ACRV)

Issues

No Alternative for Displaced Element

Node 2 +Z Port (PLM)

Issues

Impact to PLM Exchange Operations

Violation of PLM Exchange Requirement

STRUCTURAL GROWTH STUDY OVERVIEW

The primary purposes of the structural growth study are (1) to develop a number of transition structure concepts which will permit the addition of various growth structure orthogonal to the pre-integrated truss (PIT) transverse boom structure; (2) develop physical concepts for the attachment of a transition structure to the PIT and identify any necessary scars; (3) determine what structural scars, if any, are necessary to allow the addition of growth power modules outboard of the solar array rotary joint (SARJ). In addition to these primary objectives this study will develop concepts for routing and installation of additional utility lines associated with additional power modules and growth in baseline SSF systems.

Also, this task will develop finite element models of several growth configuration concepts to be used in performing dynamic loads analysis to assess the structural response and integrity of the growth concepts for various SSF operations. These operations will include SSF reboost, Shuttle docking/berthing, and plume impingement effects.

Structural Growth Study

Define and analyze structural growth options for restructured Space Station Freedom Pre-Integrated Truss (PIT).

- Develop transition structure concepts which will permit the addition of growth structure orthogonal to the PIT.
- Develop concepts for the physical attachment of a transition structure to the PIT and identify necessary scars.
- Determine what structural scars are necessary to allow the addition of growth power modules outboard of the SARJ.
- Develop concepts for routing and installation of additional utility lines associated with the addition of growth power modules and orthogonal growth structure.
- Develop finite element models of growth configuration concepts.
- Perform dynamic loads analysis of configuration models.

GROWTH STRUCTURE

Illustrated are the primary drivers and their potential locations which will impact the attachment of growth structure to the baseline SSF configuration. As mentioned earlier, additional power generation capability must be accommodated outboard of the SARJ. Additionally, growth structure will need to be added orthogonally to the transverse boom to accommodate growth of SSF systems, such as thermal control radiators and cryogenic pallet storage, accommodation of earth observing and technology payloads, and eventually the accommodation of an orbital spacecraft processing facility.

Orthogonal Growth Structure

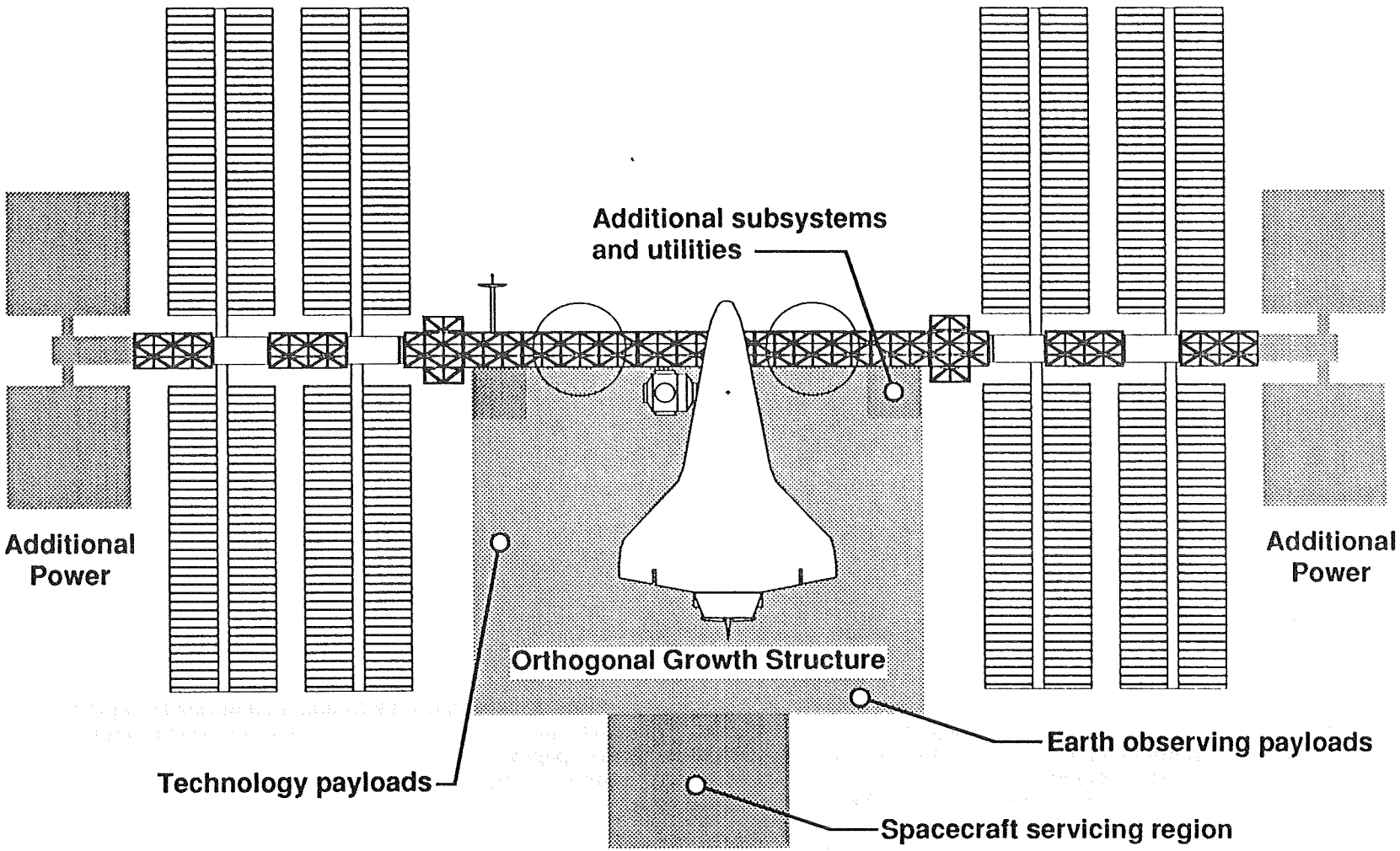

THERMAL CONTROL SYSTEM GROWTH LOCATION

The location of growth radiators and their associated distribution lines is shown to illustrate the potential for their accommodation on a set of lower keels and boom.

PIT Growth Utility Requirements

Thermal Control System

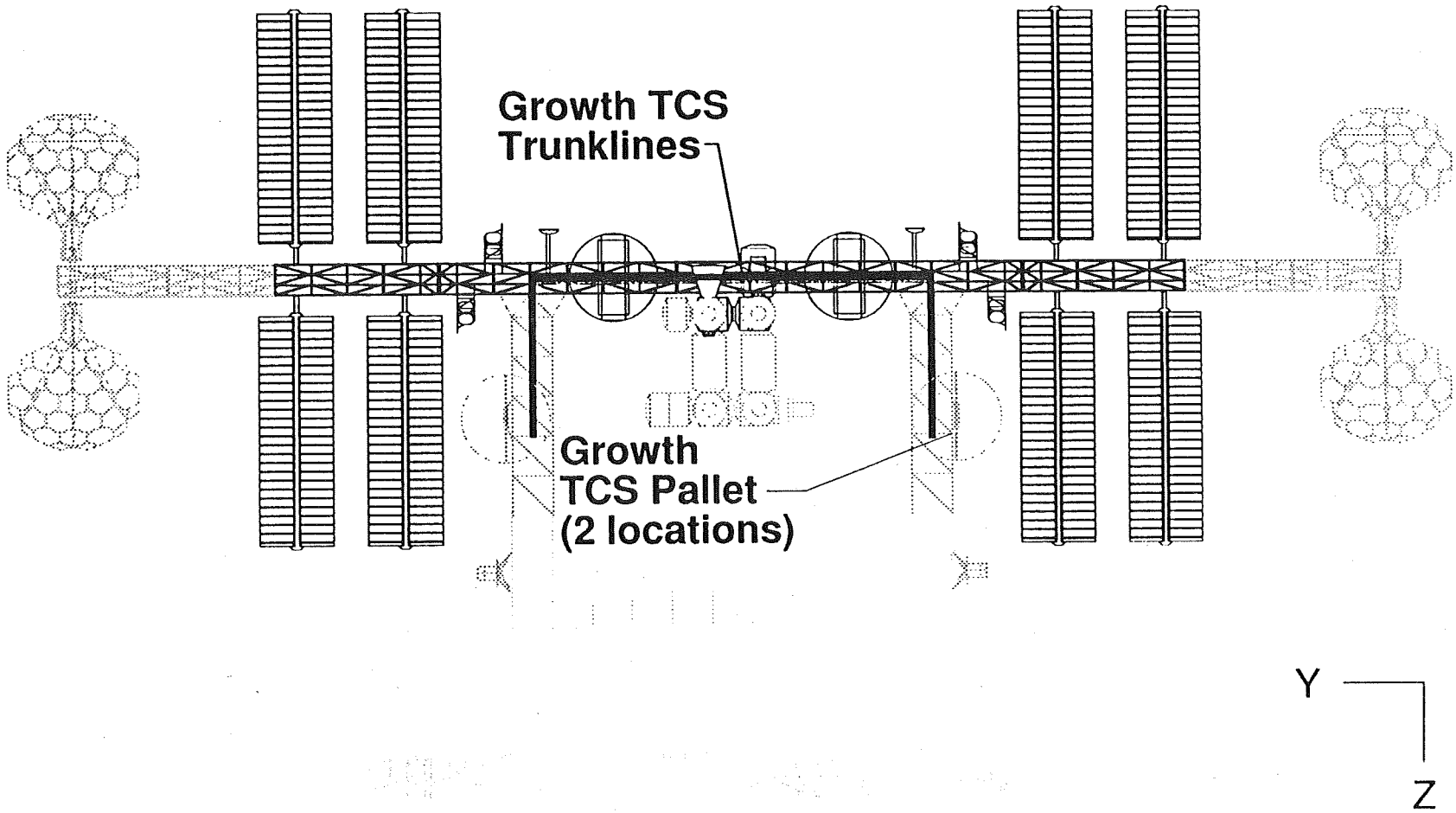

LUNAR TRANSFER VEHICLE ASSEMBLY SERVICING FACILITY TASK

The final study task to be discussed is the development of an assembly servicing facility (ASF) to process lunar transfer vehicles (LTV). This task is responsible for the engineering and configuration definition of a facility that process LTVs, including determining orbital debris/micrometeoroid protection schemes, thermal control systems, and propellant management systems. In addition, the task will assess and define operations and processing systems that are required to service the LTV including, IVA, EVA, and robotics systems.

This task is currently scheduled for completion in late September 1991, with a final report due out in October.

SSF Evolution Configuration Assessment

LTV Assembly Servicing Facility Task

- Determine LTV Assembly Servicing Facility Requirements
- Engineering and Configuration Definition of LTV ASF
  - Orbital debris/Micrometeoroid Protection
  - Thermal Control System
  - Propellant Management (Handling, Storage, Transfer)
  - Other systems as required [Lighting; Logistics (spares stowage; robotics; checkout)]
- Operations and Processing Systems Definition
  - Level of A&R required
  - EVA and IVA systems
  - Orbital Support Equipment (OSE) design and capabilities
- On-orbit aerobrake assembly requirements
- Interfaces with existing SSF systems

EIGHT CREW CAPABILITY CONFIGURATION

As was discussed earlier, a preliminary set of SSF evolution phase configurations was developed to facilitate the completion of several systems trade studies. These four SSF evolution concepts are provided here. It should be noted that these are not necessarily the final set of configurations since the complete Figure of Merit process has not been applied at this time.

The first SSF growth configuration is more appropriately referred to as the SSF Follow-On phase as it is currently accounted for in the existing program requirements documents. This Eight Crew Capability (ECC) as the name implies, will accommodate a crew of eight. In addition, the fourth photo voltaic wing is added for a total power level of 75 kW. Also, the second habitat and laboratory modules are added, along with a second ACRV.

Evolution Summary

Eight Crew Capability (ECC)

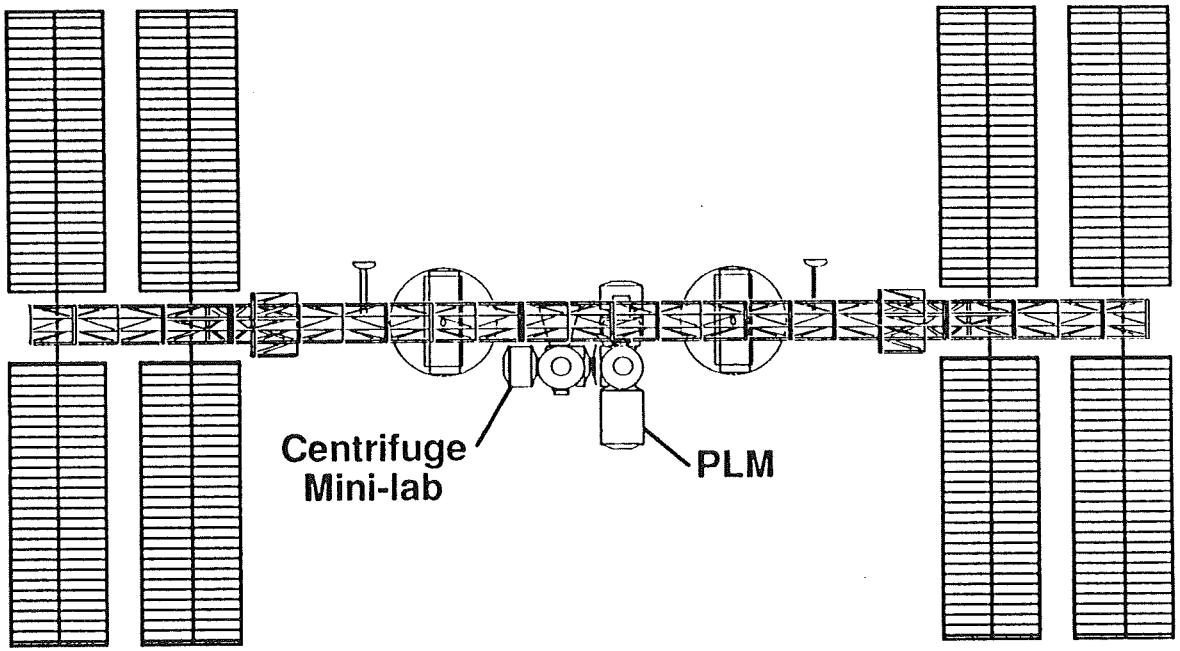

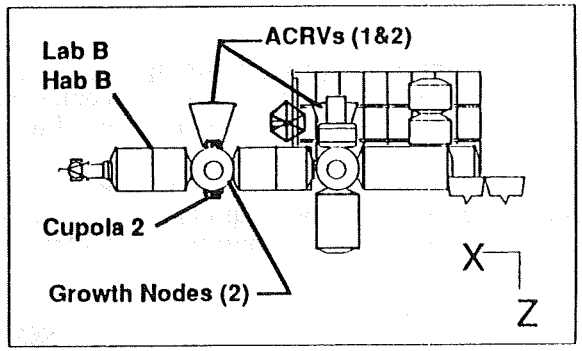

Y

Z

INTERIM RESEARCH AND DEVELOPMENT CAPABILITY

The second evolution phase adds two solar dynamic power elements (each at 18.75 kw), one on either end of the transverse boom, along with another habitat module to accommodate growth in the crew requirements. In addition, growth structure in the form of lower keels and boom have been added to accommodate the growth radiators required to handle the increase in thermal rejection requirements. The keels and boom also allow for addition external mounting location for various science and technology payloads.

Evolution Configuration and Concepts

Interim Research & Development Capability

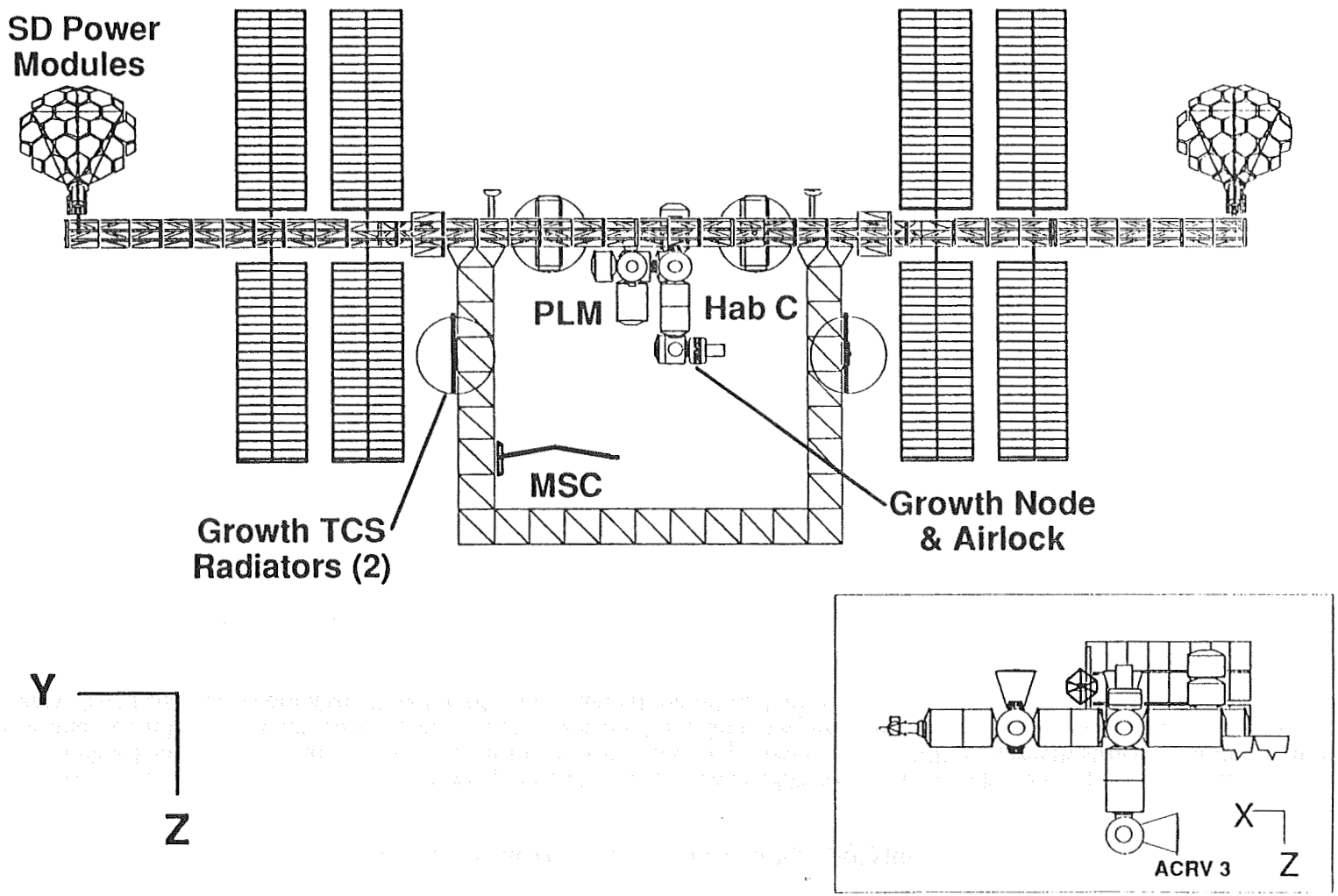

ENHANCED OPERATIONS CAPABILITY

The Enhanced Operations Capability (EOC) configuration represents an implementation concept that fully accommodates projected multidisciplinary research and development user needs as they are currently understood. The EOC could accommodate a crew of up to sixteen with the addition of a fourth habitat module, along with a fourth ACRV. Two additional solar dynamic power modules are added, bringing the SSF total power level to 150 kW. At this time an advanced propulsion system with a higher efficiency is added on order to reduce SSF reboost propulsion requirements.

Evolution Configuration and Concepts

Enhanced Operations Capability (EOC)

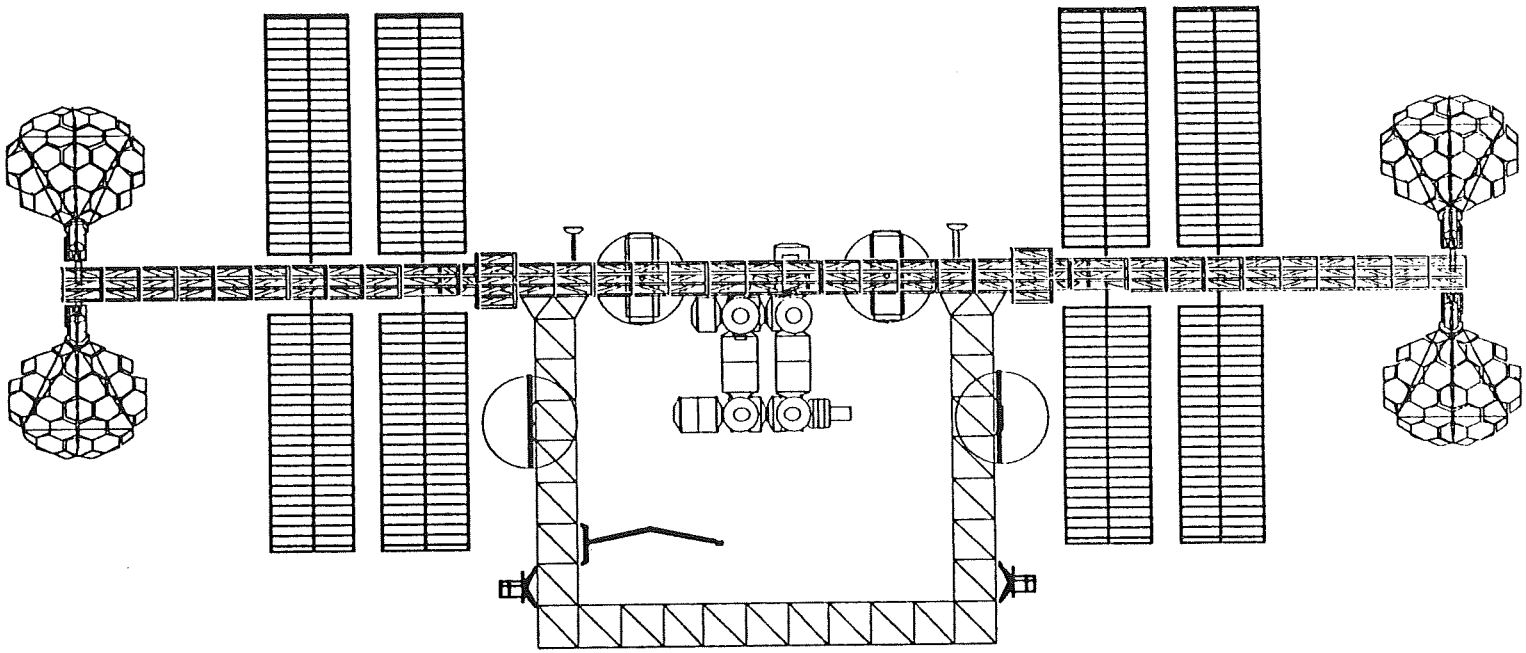

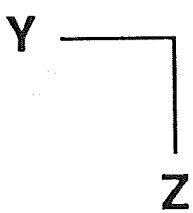

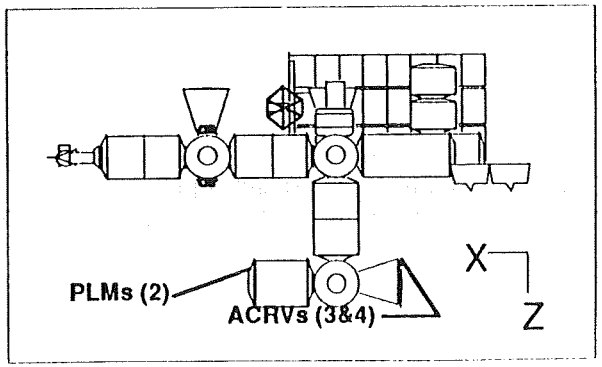

LUNAR VEHICLE CAPABILITY

The final evolution phase is the Lunar Vehicle Capability (LVC), which has a lunar transfer vehicle (LTV) assembly servicing facility (ASF) added to the bottom of the lower boom structure. The ASF is designed to accommodate one fully fueled (approximately 200 metric tons) LTV at a time. In addition, a dedicated closed life support system (CLSS) test facility is shown attached to the module pattern. This facility is dedicated to supporting the development of CLSS equipment and processes that would be necessary for the long transit times involved in a manned mission to Mars that are currently being developed within the Space Exploration Initiative.

Evolution Configurations and Concepts
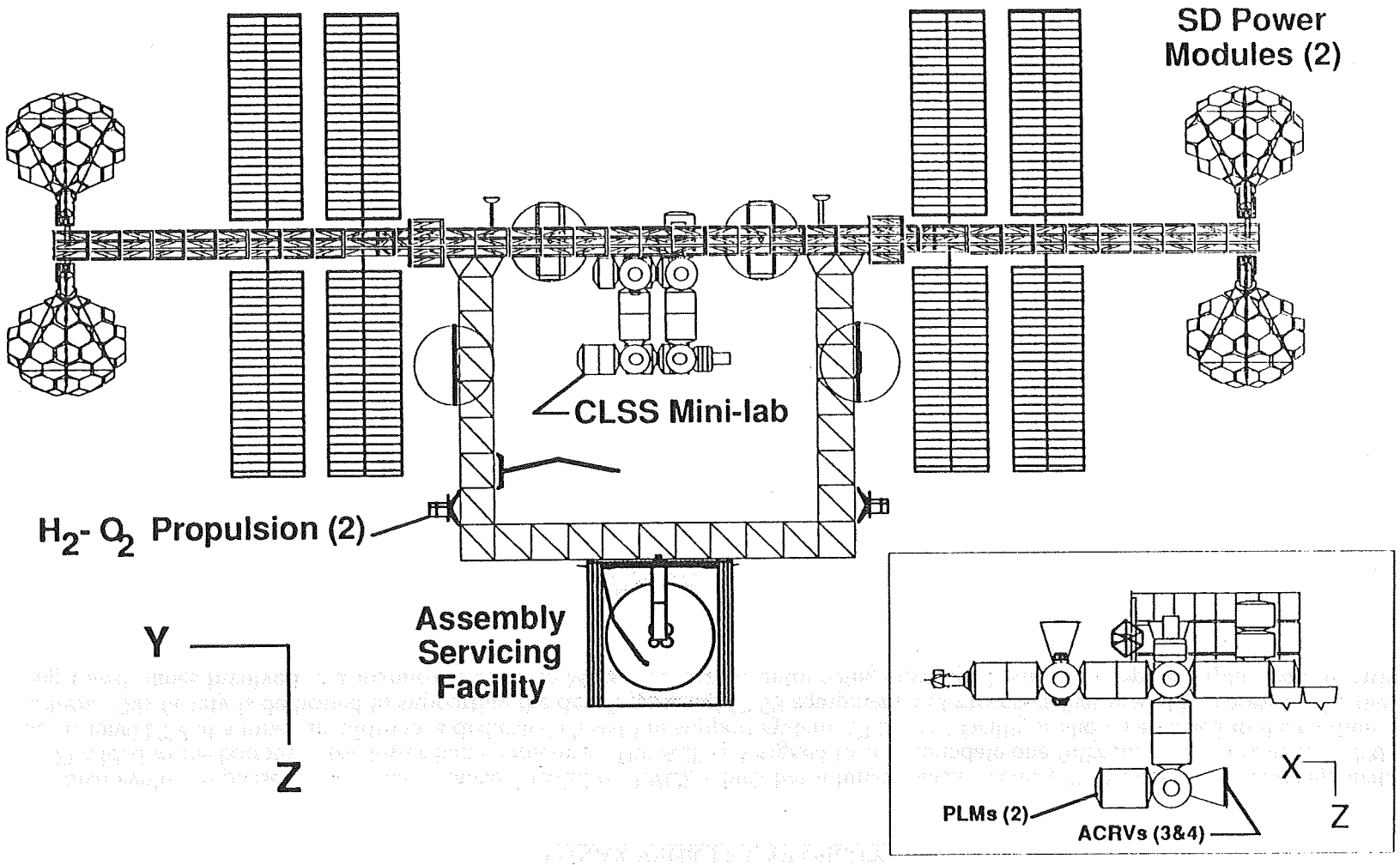
Lunar Vehicle Capability (LVC)