NASA MSFC

THE SSM/PMAD AUTOMATED TEST BED PROJECT

LOUIS F. LOLLAR

PRECEDING PAGE BLANK NOT FILMED

N92-17274

THE SSM/PMAD AUTOMATED TEST BED PROJECT

In conjunction with MSFC's Work Package One responsibilities and MSFC's previous OAET work in electrical power system autonomy, the SSM/PMAD autonomous subsystem project was initiated in 1984. The project's goal has been to design and develop an autonomous, user-supportive PMAD test bed simulating the SSF Hab/Lab module(s). Funded primarily by the SSF Advanced Development Program from FY85-88 and with additional joint funding from OAET (Code RC) during FY89-91, an eighteen kilowatt SSM/PMAD test bed model with a high degree of automated operation has been developed. To date over $3.2 million has been invested in hardware and software development. This advanced automation test bed contains three expert/knowledge based systems that interact with one another and with other more conventional software residing in up to eight distributed 386-based microcomputers to perform the necessary tasks of real-time and near real-time load scheduling, dynamic load prioritizing, and fault detection, isolation, and recovery (FDIR).

The approach has been to establish the technology through key "operational" demonstrations, prepare for early ground-based implementation in the various SSF control centers, and then to migrate the technology "on-board" as confidence builds and as schedules permit. A parallel effort was begun to establish communication links between the SSM/PMAD test bed and the primary PMAD automated test bed at LeRC in order to investigate major automated subsystem interactions. A first generation "operational" prototype has been successfully demonstrated along with a Phase I MSFC/LeRC test beds communications link.

PRECEDING PAGE BLANK NOT FILMED

PAGE 886 INTENTIONALLY BLANK

OUTLINE

- THE PMAD PROBLEM
- OBJECTIVES
- TECHNICAL APPROACH
- BASELINE INTEGRATION
- EVOLUTION AND GROWTH
- SUMMARY

OUTLINE

This presentation will begin with a look at the PMAD "problem" and include a short background and history of the SSM/PMAD project. Next, the objectives of the project will be presented followed by a discussion of the technical approach and description of the project. The next topics will consist of how the project integrates with the baseline program and how the technology may evolve into the "on-board" station. A final summary will then be presented.

NASA MSFC

TYPICAL HOUSE PMAD

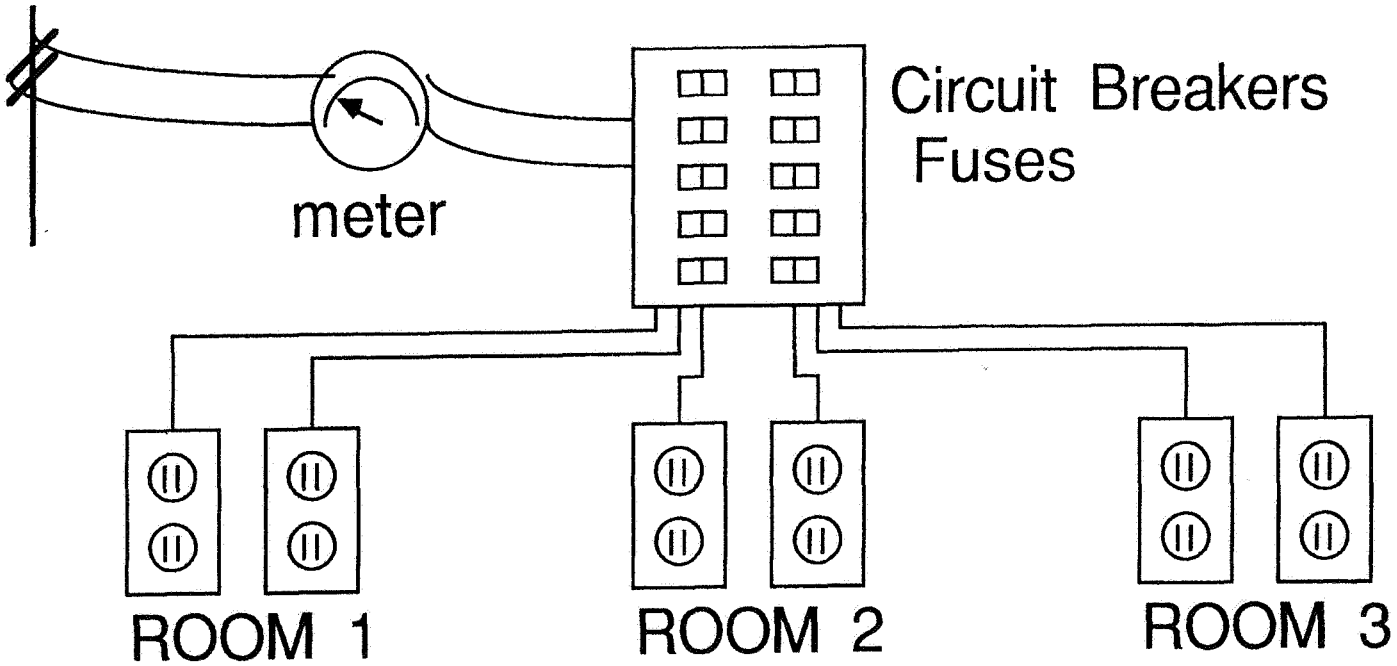

- Easy Circuit Breaker Access
- Simple Switchgear
- Trip Levels Set High
- Load Flexibility
- Cost Managed

TYPICAL HOUSE PMAD

The typical house PMAD system consists of a power meter, a circuit breaker box, and the various loads and outlets (a few of which have ground fault protection). The power feed (240/120 Vac, 60 Hz) comes from a transformer mounted on a pole or underground through a Watt-hour (Energy) meter into a control box consisting of a group of circuit breakers (and in some cases fuses). This power is then distributed through the breakers to the various loads. Typical loads are: electric oven, clothes dryer, heating/air conditioning, water heater, lighting, and the outlets.

This system contains easily accessible circuit breakers (fuses) which are electrically simple electomechanical devices. Their trip levels (amount of current required to "open" the device) are set high which means a major fault or an extraordinary number of loads in a particular outlet is required to cause the breaker to trip. This is done to prevent a user from having to spend his entire life resetting breakers. The system allows complete load flexibility. The only requirements for any load is to be of the correct voltage/frequency and to draw less current than the breaker setting. Finally, the use of energy in this system is cost managed. If you can afford it, you can use as much energy as you like.

TYPICAL SPACECRAFT POWER SYSTEM

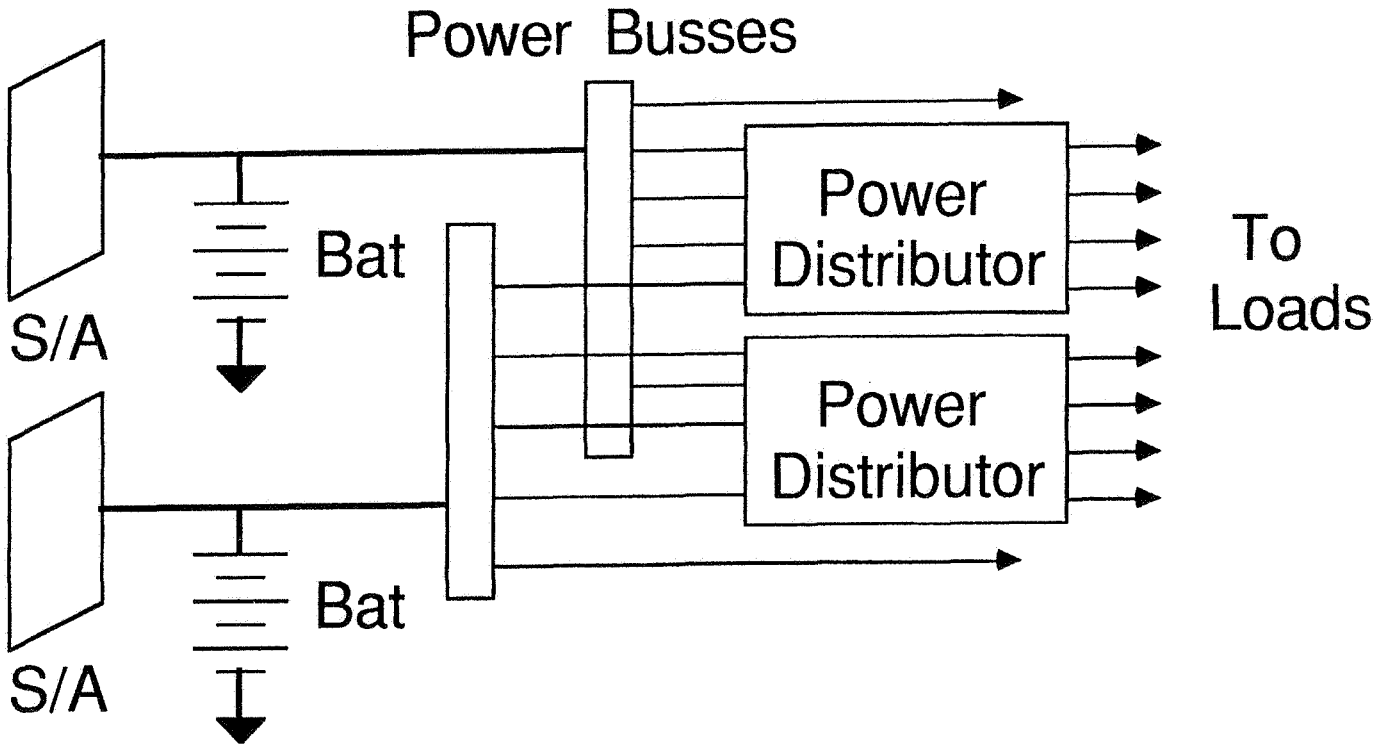

- Complex Circuit Breakers with Limited Access
- Circuit Breakers Sized for Specialized Loads
- Complex Loads with Unique Power Profiles
- Load Managed (Limited Energy Avalible)

TYPICAL SPACECRAFT POWER SYSTEM

The typical spacecraft power subsystem to date has been less than 5 kW total power and has consisted of two or more power channels (solar array, battery, and bussing) feeding power distributors to the specialized loads. The systems have been primarily low voltage dc (28 Vdc nominal) distribution using planar silicon solar arrays and Nickel based batteries.

In comparison to the terrestrial power system, the spacecraft power system has electrically complex circuit breakers with very little access capability (if at all). These breakers are also sized for practically each specialized load. The loads themselves typically have complex power profiles (power vs. time) and require an extensive scheduling team to combine the power profiles to maximize energy usage. This leads to the final point. A spacecraft has to be load managed in order to maximize its most precious resource - energy. For example, if a load begins to use more energy than its initial allotment, then either this load is shed or energy is shifted from a more efficient load or another load is shed.

AUTOMATION PROJECTS AT MSFC

- Autonomously Managed Power System (AMPS) - 1978-1985

  OAET Funded

- Battery (NiCd & NiH2) Test Expert Systems - 1983-Present

  Hubble Space Telescope Funded

- Space Station Module/Power Management and Distribution (SSM/PMAD) Automated System - 1985-Present

  OSF and OAET Funded

AUTOMATION PROJECTS AT MSFC

As background, there have been three primary automation projects at MSFC. The first, AMPS, was started in the late 70's to investigate large spacecraft power systems and how to automate them. The AMPS project, funded by OAET (Code RP) and contracted to TRW, consisted of three phases. Phase I identified a reference 250 kW-class power system based on projected 1980's technology. The basic result was a distributed multiple power channel system, using concentrator solar arrays, Nickel-Hydrogen batteries, and high voltage dc (200 Vdc nominal) distribution. Phase II focused on how to automate the system. The basic results were using distributed microcomputers and pushing the computing power as far down the architecture as possible. Phase III involved constructing a three power channel (25 kW) subsection of the reference power system to design and demonstrate the automation theories. The project was stopped shortly before full completion, but the basic automation theories were able to be demonstrated.

The second project area was the Hubble Space Telescope power system test bed. This project area introduced MSFC into the area of expert/knowledge based systems. Two separate systems were developed to automate and perform fault diagnosis on the HST power test bed which was (and is) operating 24 hours a day. When a test bed problem occurs, the system is safed and the test engineer is automatically called. During the travel time of the engineer to the test, the expert system has analyzed the situation and produced a diagnosis and explanation before the engineer arrives. These systems also are able to do multiple orbit trends analyzes. These systems were named the Nickel Cadmium Battery Expert System (NICBES) and the Nickel Hydrogen Battery Expert System (NIHES). The two systems were a result of the HST battery change in 1989.

The final active project area is the SSM/PMAD automation test bed project which is the topic of this presentation. The project was started in 1985 with funding from the Phase B advanced development program for Space Station. Martin-Marietta of Denver was awarded both the hardware and automation contracts. Presently, the project is funded through the Advanced Development Office of Space Station (Code MT) with OAET (Code RC) funding two subtasks which are more research in nature.

OBJECTIVES OF THE SSM/PMAD AUTOMATION PROJECT

- Risk Reduction for the Space Station Module by Developing a PMAD System that Demonstrates Autonomous Monitoring, Control, and FDIR Capabilities

- Identify Design Impacts to the Design, Development, and Operation of the SSF, Both Baseline and Evolution

OBJECTIVES OF THE SSM/PMAD PROJECT

The objectives for the project are to provide risk reduction for the Space Station Hab/Lab Modules power subsystem and to identify any design impacts both to the baseline and the evolution station.

The first objective is being met by having designed a high fidelity hardware test bed of the power subsystem and then to demonstrate autonomous control through the use of advanced and conventional software. The basic system has been designed and operational-type testing is being performed to evaluate and update the software/hardware.

All information from the design and test is made available to all SSF work packages, but especially to WP01 and WP04. This information is used to help guide design decisions for the baseline station. In addition, this information can be used to help in module power subsystem operations and to aid in future hardware/software upgrades to the evolving station.

BENEFITS OF AUTOMATED PMAD

- Enhance Safety
- Increase Productivity
- Cost Avoidance in Operations Personnel
- Increase Reliability
- Improved Fault Isolation and System Recovery

BENEFITS OF AUTOMATED PMAD

Automating the SSM/PMAD subsystem will produce many benefits. Five of these benefits are listed below:

(1) Safety is enhanced through the use of fast, intelligent hardware which can safe faults rapidly. Also, a critical load which loses power during a fault can be re-powered in a few seconds (less than 3) using a dual power feed and a small, but efficient computer.

(2) Productivity is increased by allowing the power system operator (ground or flight) to focus on more critical tasks than the operation of the power subsystem. Through the use of dynamic re-scheduling, even in off-nominal situations, the source energy to load energy ratio can be maximized.

(3) Skylab required twenty ground support personnel and a flight crew of three to operate an 8 kW power system. Using automation techniques, as SSF evolves, the number of personnel required to operate the power system can remain constant. Further, as the user interface matures, the technical expertise required by an operator could be reduced.

(4) Reliability is increased by the system consistency offered by the automated software. Also, system hardware stress is reduced through intelligent load scheduling and load energy balancing.

(5) System faults are safed, isolated, and diagnosed [redacted] in a few milliseconds to seconds which allows for quicker repair and reduced downtime.

TECHNICAL APPROACH

- Use Advanced and Conventional Software Techniques to Automate a SSF Fidelity Test Bed
- Use a Distributed Function Approach; the More Time Critical Functions are Performed Nearest the User
- Develop a User - Supportive Graphics Interface

TECHNICAL APPROACH

The technical approach to the project was to build a test bed model of the SSM/PMAD subsystem and then to add the automation software and any additional hardware needed for full autonomous operation. The automation software would be a combination of standard software and the latest advanced software techniques. The present software architecture consists of three expert/knowledge based systems and numerous specialized conventional programs.

One of the first steps taken was to analyze the power system operation process and then to break these processes into their various functions. The next step was to arrange these functions according to their time criticalities and then to distribute the functions in such a way as to maximize their speed. Thus, the critical time functions are performed nearest the loads using conventional software with the less time critical functions being performed further from the loads, but using more powerful hardware/software tools.

The last key to the project was to use a powerful user-supportive graphics interface to allow for the fourth expert in the system, namely, the human system operator. The interface has become an integral part of the operation of the system as well as providing valuable information as to how the system is determining its control decisions.

Space Station Module/Power Management and Distribution System

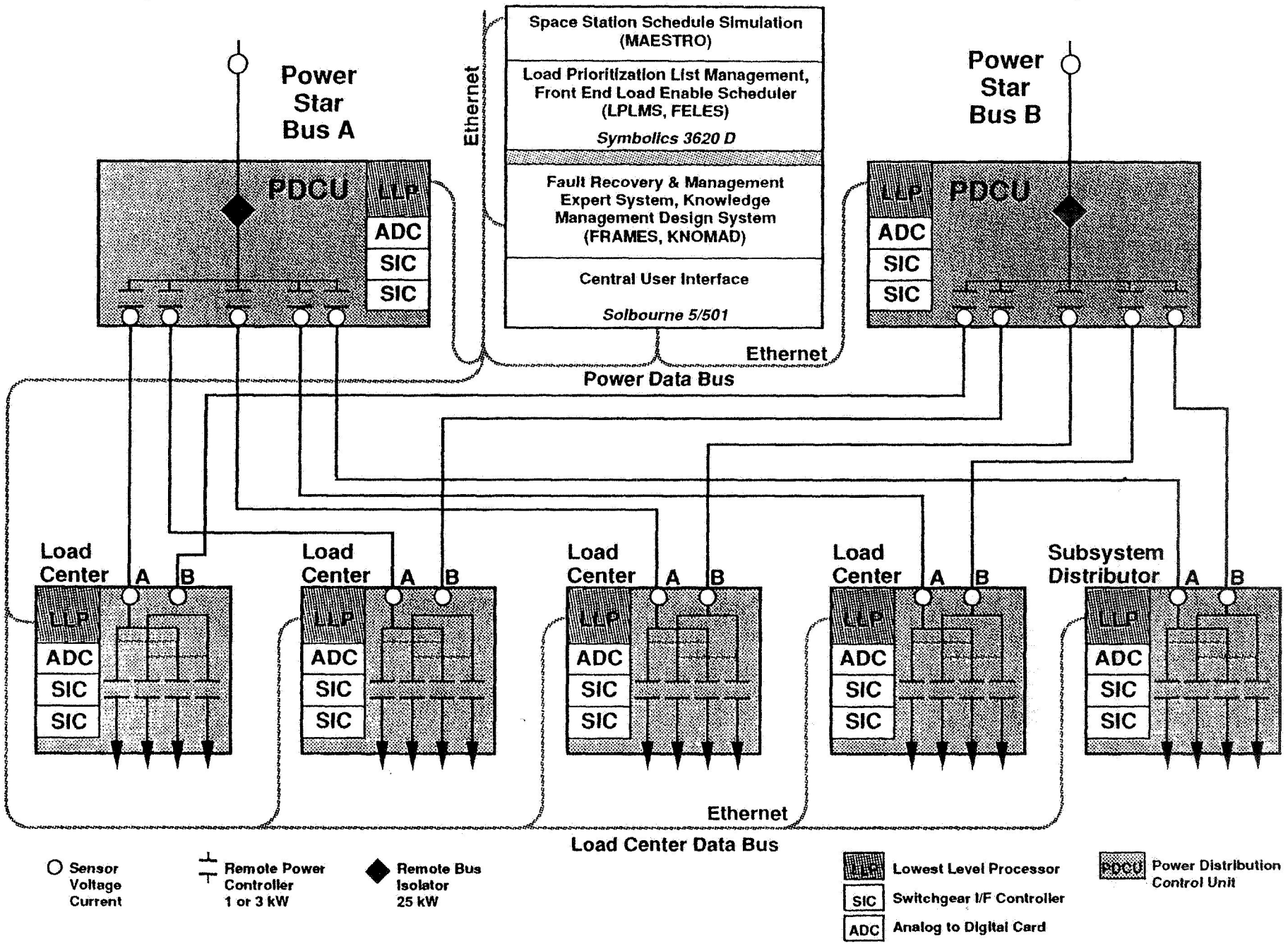

HARDWARE/SOFTWARE SCHEMATIC DIAGRAMS OF THE SYSTEM

This test bed hardware has two power distribution control units (PDCUs) and three load centers. The basic system design allows for two additional load centers. Further, the test bed includes remote bus isolators (RBIs), remote controlled circuit breakers (RCCBs), and remote power controllers (RPCs). Lastly, a lowest level processor (LLP) is included in each PDCU and load center. In the software area of the test bed, autonomy is pushed down to the lowest levels, specifically, to the LLPs and through the switch interface processors to the "smart" switchgear. Three Artificial Intelligence (AI) systems - the Fault Recovery And Management Expert System (FRAMES), the Load Priority List Management System (LPLMS), and the Master of Automated Expert Scheduling Through Resource Orchestration (MAESTRO) -reside above and communicate with the other processors through the Communications and User Interface (CUI) software.

The system software is distributed through several different types of processors and at different hierarchical levels. The LLPs are located at the level nearest the power hardware. The CUI software is notified of any anomalies by the LLP. FRAMES, MAESTRO, and LPLMS share the highest level of the hierarchy. Each step up this hierarchy reveals a decrease in speed (microseconds at the switchgear level, milliseconds to seconds at the LLP level, seconds to minutes at the AI level and an increase in sophistication.

The LLPs consist of Intel 80386 based computers and an Ethernet communication board. A LLP is located in each load center, subsystem distributor, and PDCU. Each LLP is responsible for controlling the switches associated with it and for keeping track of all the sensor readings and switch positions in its center. The LLP also executes scheduled changes in switch positions, sheds any loads which exceed their scheduled maximum, and switches redundant loads to their secondary bus if the load's primary source is interrupted. The LLP passes any or all of this information to the CUI software.

The CUI software is resident in a Solbourne 5/501 UNIX based workstation. The CUI software routes information to the various LLPs, controls LLP initialization, and serves as the man/machine interface for the entire system. Messages are passed from the three AI systems to the LLPs through the CUI via Ethernet communication links.

SSM/PMAD MANAGEMENT AND SOFTWARE LOGIC FLOW DIAGRAM

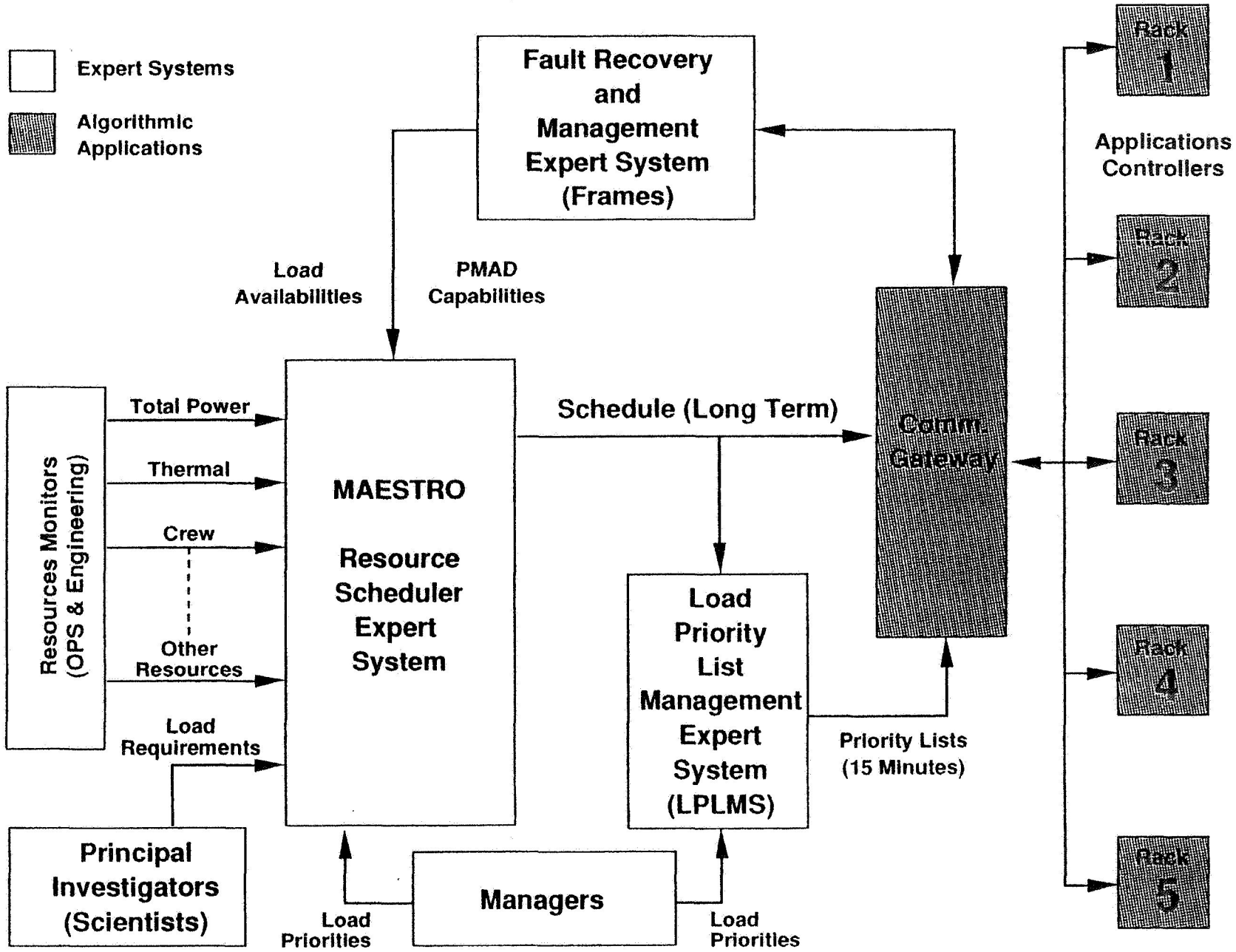

SCHEMATICS DESCRIPTION (CONTINUED)

The FRAMES resides on the Solbourne 5/501 workstation and is implemented in the Common Lisp Object System (CLOS). This expert system watches over the entire EPS looking for anomalies and failures. FRAMES is responsible for detecting faults, advising the operator of appropriate corrective actions, and, in cases involving critical loads, autonomously implementing corrective actions through power system reconfigurations. FRAMES recognizes and adjusts to hard faults which the smart switchgear handles immediately, as well as handling soft faults, cascaded faults, and independent multiple faults.

The LPLMS resides on the Solbourne 5/501 workstation and is implemented in LISP. The LPLMS keeps track of the dynamic priorities of all payloads while developing and downloading current load shedding lists for the LLPs every fifteen minutes in preparation for contingencies which necessitate load shedding. This way, load shedding is implemented quickly in each load center or subsystem distributor. The LPLMS maintains a real time dynamic representation of all the module loads and relevant facts so that applicable rules can fire to reorder portions of the load shedding list as situations change. The loads in a laboratory module may have dynamic properties. A critical noninterruptible materials processing experiment involving crystal growth will undoubtedly have a different priority as it nears completion. Other factors may change priorities such as equipment malfunctions. An expert system such as the LPLMS is crucial in determining which loads must be shed in the event of perturbations to the available power. The LPLMS insures that critical loads not be shed unnecessarily.

MAESTRO resides on a Symbolics 3620D and is implemented in LISP. Special interfaces have been developed for MAESTRO which allow a great deal of flexibility in interactions with the scheduler. MAESTRO is a resource scheduler developed by Martin Marietta and can schedule and reschedule a number of payloads with various scheduling constraints. This AI system generates the baseline schedules for the EPS and accepts information from the other processors on when and how to reschedule module payloads. MAESTRO uses pieces of several AI technologies including object-oriented programming, heuristically guided search, activity library, expert functions, etc. MAESTRO schedules loads with regard to numerous resource constraints such as available crew members, supplies for payloads, interdependence of payloads, power profiles, and thermal status.

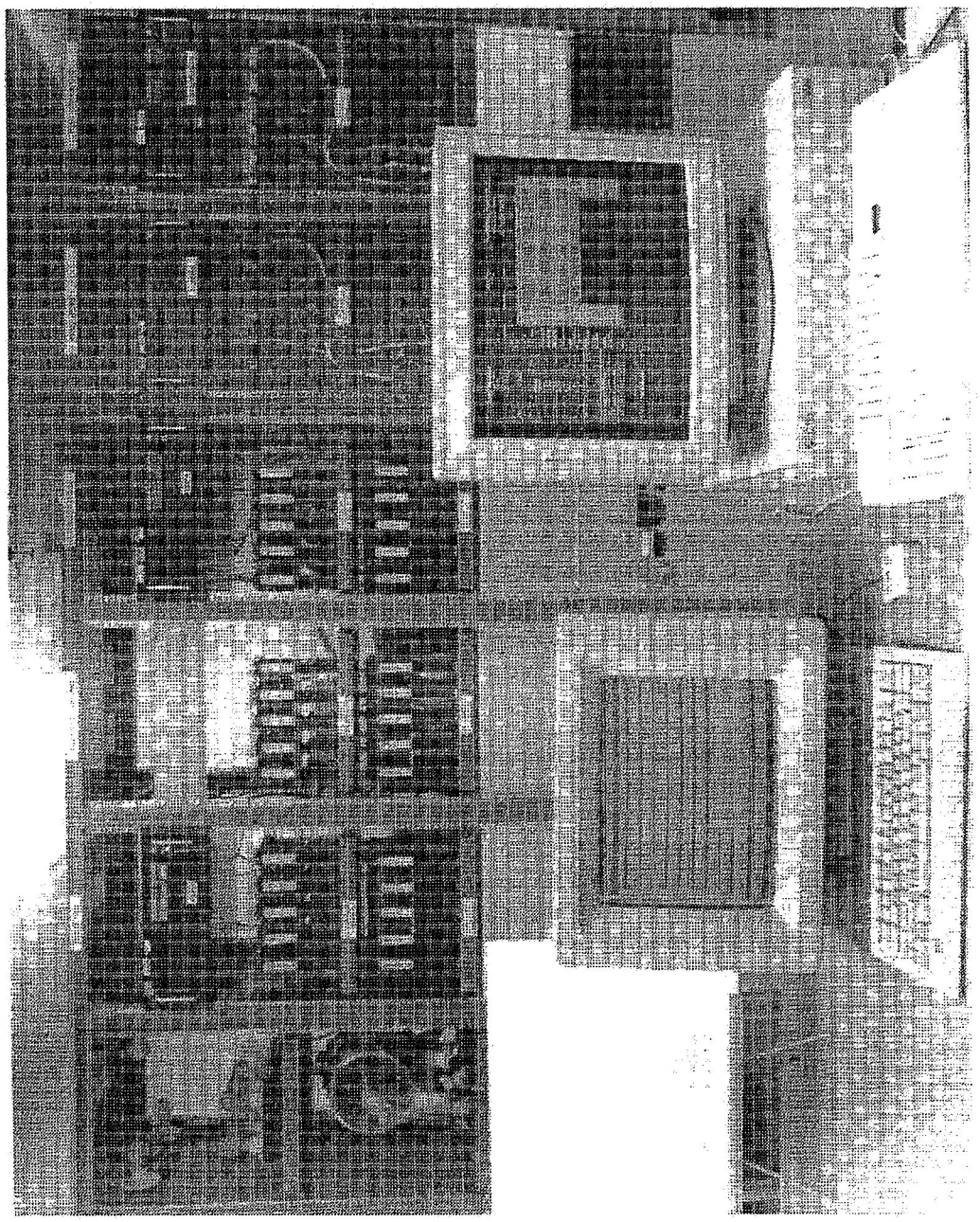

ORIGINAL PAGE IS
OF POOR QUALITY

SCHEMATICS DESCRIPTION (CONTINUED) PLUS PHOTOGRAPH

In order to efficiently operate these three expert systems together, a simultaneous multi-agent knowledge manager function called the Knowledge Management and Design (KNOMAD) system was designed and built. KNOMAD utilizes a distributed database management function to provide a modified blackboard management capability. The KNOMAD architecture is layered. The central layer is the database which provides a place for storing working memory data, for transferring and sharing data, and for storing long term data. The database is modular and may be implemented as a distributed database. As a distributed database, multiple cooperating knowledge agents, each in different physical locations, could be supported. The next layer consists of an interface to the database that provides a frame system for abstracting both data and procedure as well as a mechanism for storing simple facts. The top layer is the place where various tools are defined and implemented. All of the tools make use of the same data representation and thus easily share data across domains and functions. FRAMES was implemented in KNOMAD in June of 1990 with LPLMS and a MAESTRO interface being implemented in April 1991.

PHOTOGRAPH

In the front of the photo, the Solbourne workstation is on the right and the Symbolics AI workstation is on the left. Looking at the racks, The PDCU racks are on the right with the three load center racks to the left of the PDCUs. The far left rack consists a few representative loads. The majority resistive loads are located in an annex building to this room. Each rack, from top to bottom, consists of an LLP, a group of 1 kW or 3 kW RPCs, a group of RPC controller cards (behind the silver plate), housekeeping power supplies, and cooling fans. Load Center 2's (Material Science Rack) LLP is located on a table to the right of the Solbourne (easier access).

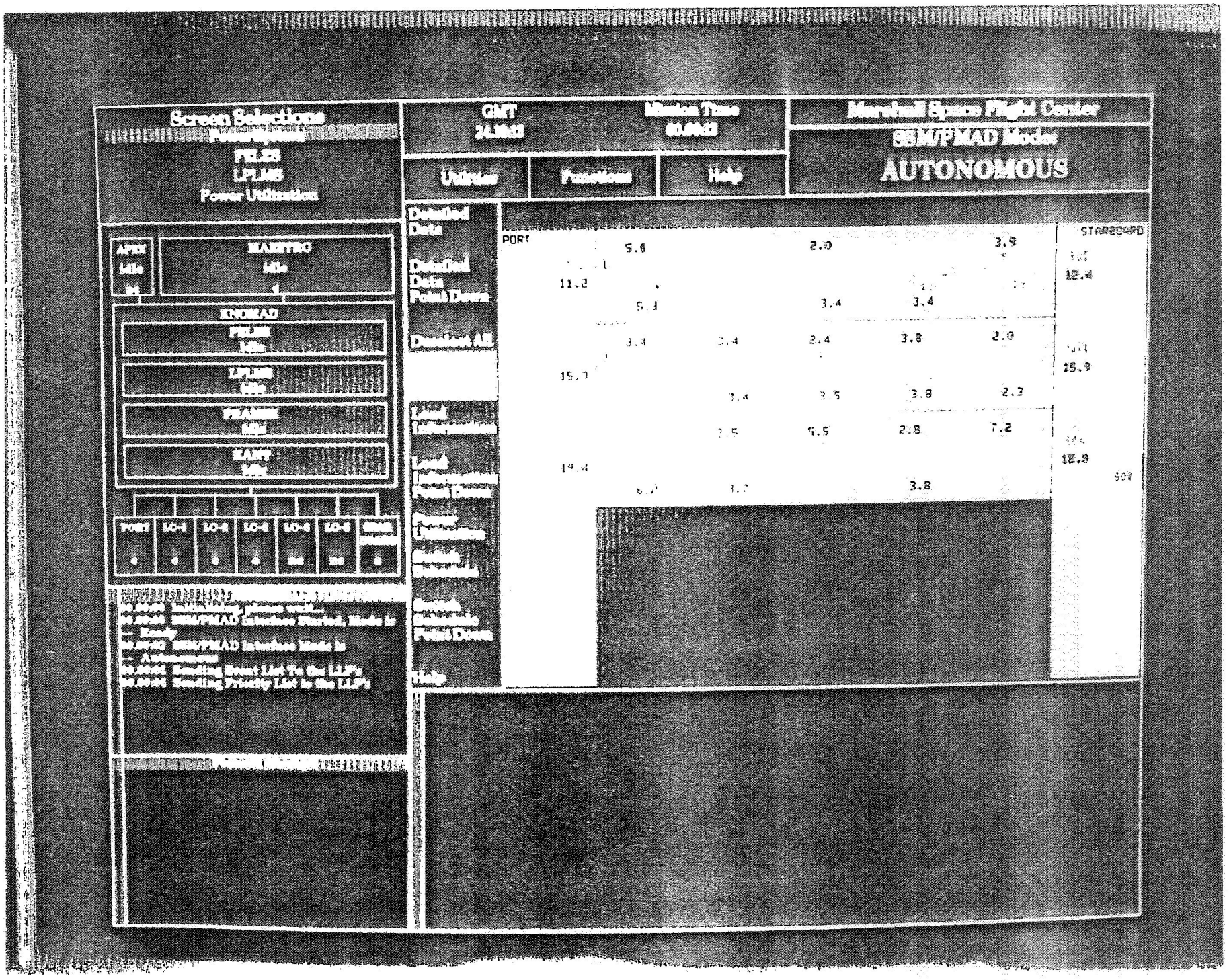

ORIGINAL PAGE IS
OF POOR QUALITY

USER INTERFACE PHOTOGRAPH (POWER SYSTEM SCREEN)

This photo of the user interface features the power system screen (PSS) which is the primary screen for normal operation. Located in the center right window, the PSS displays power flow through the use of white filled in "pipes" and RPC open/close through a toggle switch icon. The 1 kW RPC rectangles and the 3 kW RPC ovals are colored green for nominal operation, red for faulted conditions, and brown for out-of-service. They also display their designator (small print) and the amount of current flow through the RPC (bold number). The diamonds represent the RBI and the small circles represent additional voltage and current sensors. The selection rectangle to the left of the PSS is for obtaining more detailed information for each or all RPCs. When requested, this information is displayed underneath the PSS in the "scratch-pad" window. The various modes (Ready, Created, Manual, Autonomous) are displayed above and to the right of the PSS. Various Utility, Function, and Help requests are made through pull down windows just above the PSS. Located to the left center of the PSS, the KNOMAD screen dynamically displays Ethernet connections, the various application programs, and their status. The message screen(s) at the bottom left gives textual data for the messages being passed through the system. Through the Utilities menu, a Focused Message window can be brought up which displays filtered messages as chosen by the user. The final active screen is the Screen Selection window in the upper left corner of the interface. When selected, one of four sub-screens replaces the PSS for further information.

ORIGINAL PAGE IS
OF POOR QUALITY

USER-INTERFACE (FELES SCREEN)

This is a photo of the FELES screen selection. This screen shows a timeline for each scheduled load and a marker showing the present time on the schedule. Again, additional information can be requested through the rectangle box to the left of the FELES screen.

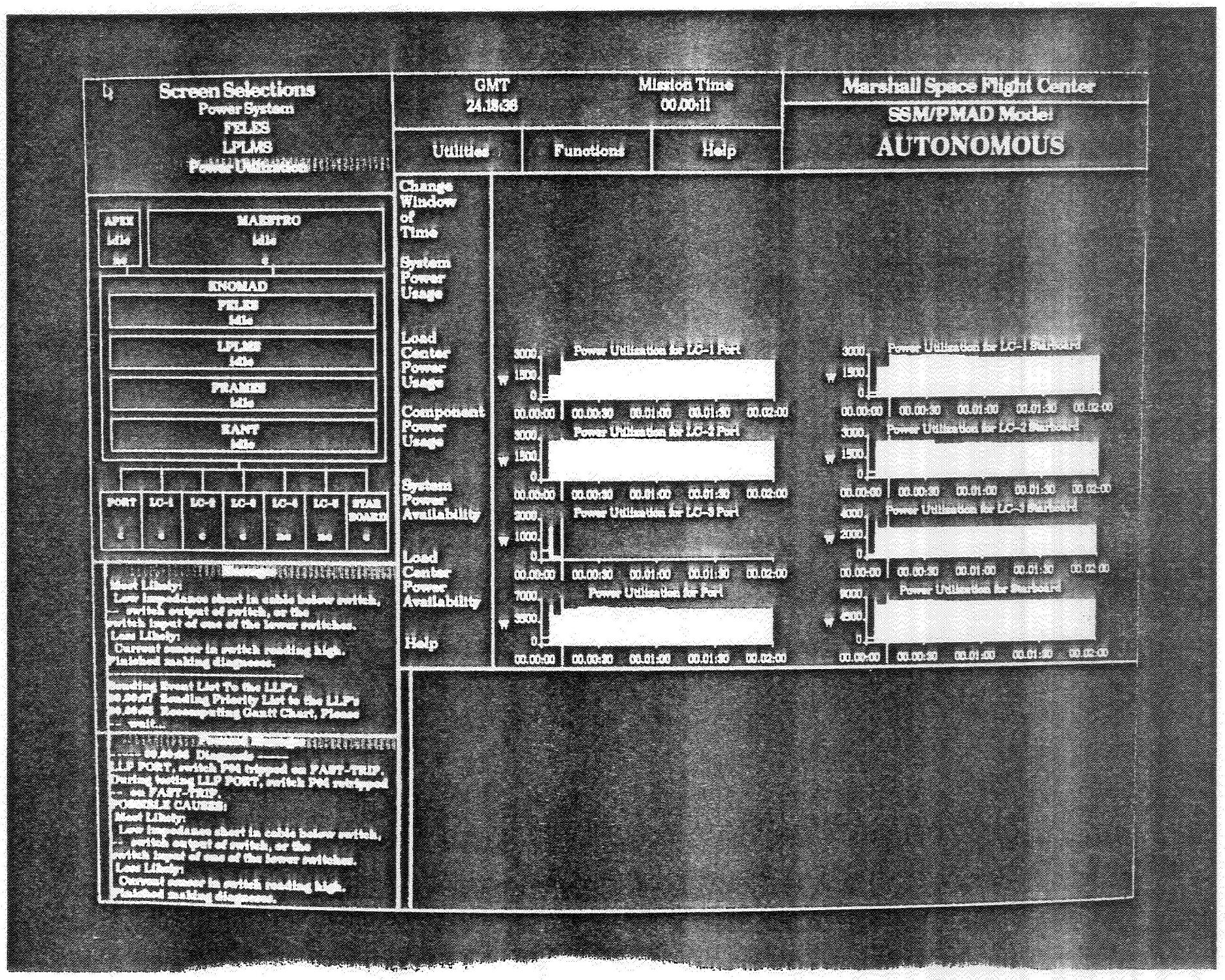

ORIGINAL PAGE IS
OF POOR QUALITY

USER-INTERFACE (POWER UTILIZATION SCREEN)

This photo displays the Power Utilization screen which displays a power versus time load profile for each PDCU, load center, and the individual loads. The white marker displays the present time and the white line displays actual power usage versus time.

BASELINE INTEGRATION

- SSF Fidelity PMAD Testbed
- Operational Demonstration Held Before CDRs
- Prepare for Early Ground-Based Implementation
  - Payload Operations Control Center - MSFC
  - Module Engineering Support Center - MSFC
  - Space Station Control Center - JSC
- Establish Functional Links with LeRC EPS Automated Testbed
- Establish Key Relationships with Baseline Personnel

BASELINE INTEGRATION

As mentioned earlier, one goal of this project is to maintain as close of ties as possible to the baseline design of the SSF. Listed below are a few of the ways in which this goal is being accomplished.

(1) As much as possible, we are attempting to make our testbed mimic the baseline PMAD testbed. In most cases, this will require us to disable many of the advanced features of the original testbed, especially in the RPCs, the sensors, and the lower level processors.

(2) We are presenting operational demonstrations before the critical design reviews in order to provide more and better data to guide decision making. The first operational demonstrations are being held this summer with a second more advanced demonstration to be held next summer. The CDRs for the WP01 PMAD are scheduled for early 1993.

(3) We are planning for an early ground-based implementation in order to support the POCC at MSFC, the ESC at MSFC, and the SSOC at JSC. Implementation could be accomplished by porting real-time or near real-time flight data into the SSM/PMAD computers and then perform system fault diagnosis with both the ground hardware data and the flight data.

(4) We have completed a Phase I link with a LeRC automated test bed. A simple fault handling scenario was then successfully demonstrated. This will form the basis for a full LeRC SSF automated test bed/MSFC SSF automated test bed link to be completed late in 1992. This will allow for ground system testing between the two major power SSF subsystems.

(5) Relationships are being established with all key baseline personnel. These include, but are not limited to: MSFC and Boeing power system design engineers, MSFC and Boeing SSF project offices, LeRC and Rocketdyne power system design engineers, MSFC and Boeing system integrators and operations personnel, JSC mission control system personnel, and various Level 1 and 2 personnel at NASA Headquarters.

GROWTH AND EVOLUTION OPTIONS

- Establish the Automation Techniques on the Ground
- Port Software to a Portable Workstation and "Plug-In" to the On-board System
- "Intelligent" RPC Retrofit
- Rack(s) Retrofit

GROWTH AND EVOLUTION OPTIONS

In order to meet our goal of on-board automation, a series of key and orderly steps to flight are being planned. The first step is to establish the ability to automate the actual SSF PMAD through ground based implementation. The next step would be to act as a power system engineer surrogate through the use of powerful portable computer workstations being designed. The automation software could be downloaded into the workstation, flown to SSF, and then attached to the on-board data stream. A next step would be to retrofit "intelligent" RPCs which are now being designed. A final step would be to incorporate the automation equipment more permanently by mounting the system in new rack(s) and performing a rack(s) retrofit.

NASA MSFC

SUMMARY

- PMAD Risk Reduction Through the Use of Autonomous Monitoring, Control and FDIR
- Basic Concepts Have Been Established and New Technologies Applied to a Testbed Model of the SSF PMAD
- A First Generation Operational Prototype Has Been Successfully Demonstrated
- Preparing for Early Ground-Based Implementation Supporting the Control Centers
- Evolves to "On-Board" Operation

SUMMARY

This paper has described the various activities at NASA/MSFC for advancing the state-of-the-art in spacecraft electrical power system automation. Based on the AMPS and SSM/PMAD projects, a hierarchical approach of distributed processing is being developed. In addition, AI and in particular, knowledge-based systems, are proving to be invaluable in accomplishing tasks not possible with conventional software. We are demonstrating PMAD risk reduction through the use of autonomous monitoring, control, and FDIR. Basic concepts have been established with a first generation operational prototype having been successfully demonstrated. The next steps involve integrating the testbed into the ground based support centers and then evolving onto the SSF. Thus, NASA/MSFC is progressing toward the eventual goal of a totally autonomous power system (with human override).