X93-36261

SPACE STATION FURNACE FACILITY

REQUIREMENTS DEFINITION AND CONCEPTUAL DESIGN STUDY TECHNICAL REPORT

Contract No. NAS8-38077

DR-8

May 1992

Space Programs Division
Teledyne Brown Engineering
300 Sparkman Drive
P.O. Box 070007
Huntsville, Alabama 35807-7007

G. Jenkins
SSFF Program Manager

A. Sharpe, Manager
Advanced Programs Department

TABLE OF CONTENTS

Section	Title	Page
1.0	INTRODUCTION	1-1
2.0	BACKGROUND	2-1
3.0	OVERVIEW	3-1
4.0	CONTRACTOR TASKS	4-1
4.1	Furnaces' Conceptual Design (SOW 5.1)	4-1
4.2	SSFF Module 1 Conceptual Design (SOW 5.1.1)	4-2
4.3	Furnace Core Facility Definition and Conceptual Design (SOW 5.2)	4-2
4.4	System Analysis and Requirements (SOW 5.2.1)	4-3
4.5	Venting Requirements (SOW 5.2.1.1)	4-5
4.6	Missions Operations Scenarios (SOW 5.2.1.2)	4-5
4.7	Facility Configuration (SOW 5.2.2)	4-6
4.8	SSFF Configuration Adaptability (SOW 5.2.2.1)	4-6
4.9	Facility Mockups (SOW 5.2.3)	4-7
4.10	Conceptual Design Review (CoDR) (SOW 5.2.4)	4-7
4.11	Development Models Design Fabrication, Assembly, and Test (SOW 5.3)	4-9
4.12	Science Requirements (SOW 5.4)	4-9
4.13	Trade Studies (SOW 5.5)	410
4.14	Furnace Facility Breakpoints (SOW 5.5.1)	4-10
4.15	Impact of Requirement for Orienting Sample Axis SOW 5.5.2)	4-11
4.16	Hot Ampoule Exchange, Ampoule Mounting, and Translation Mechanisms (SOW 5.5.3, 5.5.4, 5.5.5)	4-11
4.17	Impact of the Requirement for Magnetic Suppression (SOW 5.5.6)	4-11
4.18	Core Common Subsystems (SOW 5.5.7)	4-13
4.19	Cost Drivers (SOW 5.5.8)	4-13
4.20	Optimum Means of Reprogramming Experiment Control (SOW 5.5.9)	4-17
4.21	Software Requirements (SOW 5.6)	4-17
4.22	Preliminary Contract End Item (CEI) Specification, Part 1 (SOW 5.7)	4-17
4.23	Ground Support Equipment (GSE) (SOW 5.8)	4-17
4.24	Preliminary Experiments/Facility Requirements Document (SOW 5.9)	4-18

TABLE OF CONTENTS (Conc.)

Section	Title	Page
4.25	Project Planing Tasks (SOW 5.10)	4-18
4.26	Schedules (SOW 5.10.2)	4-18
4.27	Work Breakdown Structure (SOW 5.10.3)	4-19
4.28	Project Cost Data (SOW 5.10.4)	4-19
4.29	Technology Requirements (SOW 5.10.5)	4-19
4.30	Environmental Analysis (SOW 5.10.6)	4-21
4.31	On-Orbit Configuration Control and Safety and Functional Verification (SOW 5.10.6.6)	4-21
4.32	Requirements Definition Review (SOW 5.11)	4-21
4.33	Phase 0 Safety Review	4-22
APPENDICES		
Part 1	CEI Specification (Separately Bound)	
Part 2	Project Implementation Plan (Separately Bound)	
Part 3	Environmental Analysis (Midterm) (Separately Bound)	
Part 4	New Technology Requirements Summary	
Part 5	Experiment Facility Requirements Document (Separately Bound)	
Part 6	Technical Summary (Separately Bound)	
Part 7	Final Report New Technology	

LIST OF ILLUSTRATIONS

Figure	Title	Page
2-1	SSFF Concept	2-2
4-1	SSFF Core Systems Block Diagram	4-4

ABBREVIATIONS AND ACRONYMS

AADSF	Advanced Automated Directional Solidification Furnace
AG	Application Generator
AMS	Acceleration Monitoring System
ATP	Authority to Proceed
CD/ROM	Compact Disk/Read Only Memory
CEI	Contract End Item
CGF	Crystal Growth Furnace
cm	Centimeter
CMS	Contamination Monitoring System
CoDR	Conceptual Design Review
COTR	Contracting Officer's Technical Representative
CRD	Capabilities Requirements Document
DMS	Data Management Subsystem
DR	Data Requirement
DTA	Demonstration Test Article
E/FRD	Experiment/Facilities Requirements Document
ECR	Engineering Change Request
EMI	Electromagnetic Interface
EPS	Electrical Power System
ER	Experiment Rack
ERD	Experiment Requirements Document
FDDI	Fiber Distributed Data Interface
FM	Furnace Module
g	Gravity
GCEL	Ground Control Experiment Laboratory
GDS	Gas Distribution System
GFE	Government-Furnished Equipment
GN_2	Gaseous Nitrogen
GSE	Ground Support Equipment
h	Hour
HDR	High Data Rate
HPF	High-Pressure Furnace
HRDL	High-Rate Data Link
HRDM	High-Rate Data Multiplexer

ABBREVIATIONS AND ACRONYMS (Cont.)

HRL	High-Rate Link
Hz	Hertz
IRD	Interface Requirements Document
IRDU	Interrack Demonstration Unit
IRM	Interface Radiographic Module
ISPR	International Standard Payload Rack
JSC	Johnson Space Center
kg	Kilogram
kW	Kilowatt
lb	Pound
LBB	Large Bore Bridgman
LNS	Lab Nitrogen System
M	Million
m	Meter
MASA	Metals and Alloy Solidification Apparatus
max.	Maximum
MDP	Maximum Design Pressure
MPE	Mission-Peculiar Equipment
MSAD	Materials Science Application Division
MSFC	Marshall Space Flight Center
MTC	Man-Tended Capability
mV	Millivolt
NASA	National Aeronautics and Space Administration
NTSC	National Television Standard Committee
OARE	Orbital Acceleration Research Experiment
ORU	Orbital Replacement Unit
PCDS	Power Control and Distribution Subsystem
PDR	Preliminary Design Review
PDS	Power Distribution System
PES	Payload Executive Software
PI	Principal Investigator
PIP	Project Implementation Plan
PMC	Permanently Manned Capability
PMZF	Programmable Multi-Zone Furnace

ABBREVIATIONS AND ACRONYMS (Conc.)

PRR	Preliminary Requirements Review
PSA	Preliminary Safety Analysis
QD	Quick Disconnect
Qty	Quantity
RDR	Requirements Definition Review
RID	Review Item Discrepancy
RPCM	Remote Power Control Module
SCRD	Science Capability Requirements Document
SMAC	Spacelab Maximum Allowable Concentration
SOW	Statement of Work
SRW	Science Requirements Workshop
SSF	Space Station Freedom
SSFF	Space Station Furnace Facility
SSFP	Space Station Freedom Program
SSL	Space Station Laboratory
TBD	To Be Determined
TBE	Teledyne Brown Engineering
TCS	Thermal Control System
USL	United States Laboratory
V	Volt
Vac	Volts, Alternating Current
Vdc	Volts, Direct Current
VES	Vacuum Exhaust System
W	Watt
WBS	Work Breakdown Structure
WORM	Write Once Read Many
WP	Work Package
WP-01	Work Package-01
XRF	X-Ray Fluorescence
°C	Degrees Celsius
°F	Degrees Fahrenheit

1.0 INTRODUCTION

This Final Report was prepared by Teledyne Brown Engineering (TBE) in response to Data Requirement Number 8 (DR-8) of the Space Station Furnace Facility (SSFF) Requirements Definition and Conceptional Design Study Contract, NAS8-38077. The report consists of three volumes: Volume I, Executive Summary; Volume II, Technical Report; and Volume III, Program Cost Estimate.

The SSFF Project is divided into two phases: Phase 1, a Definition Study Phase, and Phase 2, a Design and Development Phase. TBE was awarded a research study entitled, "Space Station Furnace Facility Requirements Definition and Conceptual Design Study" on June 2, 1989. This report addresses the Definition Study Phase only. Phase 2 is to be competed after completion of Phase 1. This Phase 1 contractual effort included a basic contract of 12 months' duration with a follow-on option of 18 months. Effective with the award, Arthur S. Kirkindall, of the Marshall Space Flight Center (MSFC), was named Contracting Officer's Technical Representative (COTR) for this contract.

The contract encompassed a requirements definition study and culminated in hardware/facility conceptual designs and hardware demonstration development models to test these conceptual designs. The Study was divided into two parts. Part 1 (the basic part of the effort) encompassed preliminary requirements definition and assessment; conceptional design of the SSFF Core; fabrication of mockups; and preparation for the support of a Conceptional Design Review (CoDR). Part 2 (the optional part of the effort) included detailed definition of the engineering and design requirements, as derived from the science requirements; refinement of the conceptual design of the SSFF Core; fabrication and testing of the "breadboards" or development models; and preparation for and support of a Requirements Definition Review (RDR).

The CoDR was conducted on August 20 and 21, 1990, at MSFC, and Part 1 of the contract was completed on August 31, 1990. Approval for implementation of the contract Option (Part 2) was given on August 31, 1990. The CoDR Board's recommendations included several changes in the tasks planned for Part 2 of the contract. These recommended changes were incorporated into the contract with Modification 11, and Authority to Proceed (ATP) was given January 7, 1991. Part 2 culminated in an RDR which was held on May 12 and 13, 1992, at TBE. Part 2 of the contract was completed on May 31, 1992, with the submittal of the Final Study Report.

During this 36-month study effort, the TBE Study Team participated in three major Science Requirements Workshops (SRWs), six Quarterly Reviews, one CoDR, and one RDR.

2.0 BACKGROUND

The SSFF Study was awarded on June 2, 1989, to TBE to define an advanced facility for materials research in the microgravity environment of Space Station Freedom (SSF). The SSFF will be designed for research in the solidification of metals and alloys, the crystal growth of electronic and electro-optical materials, and research in glasses and ceramics. The SSFF is one of the first "facility" class payloads planned by the Microgravity Science and Applications Division (MSAD) of the Office of Space Science and Applications of NASA Headquarters. This facility is planned for early deployment during mantended operations of the SSF with continuing operations through the Permanently Manned Configuration (PMC). The SSFF will be built around a general "Core" facility which provides common support functions not provided by SSF, common subsystems which are best centralized, and common subsystems which are best distributed with each experiment module. The intent of the facility approach is to reduce the overall cost associated with implementing and operating a variety of experiments. This is achieved by reducing the launch mass and simplifying the hardware development and qualification processes associated with each experiment. The Core will remain on orbit and will require only periodic maintenance and upgrading while new Furnace Modules, samples, and consumables are developed, qualified, and transported to the SSF.

The SSFF Study was divided into two phases: Phase 1, a Definition Study Phase, and Phase 2, a Design and Development Phase. This report addresses the Definition Phase 1 only. Phase 1 was divided into two parts: Part 1, the basic part of the effort, covered the preliminary definition and assessment of requirements; conceptual design of the SSFF; fabrication of mockups; and the preparation for and support of the Conceptual Design Review (CoDR). Part 2, the option part, covered requirements update and documentation; refinement of the selected conceptual design through additional trades and analyses; design, fabrication, and test of the Development Model; design, fabrication, and test of the Interrack Demonstration Unit; and support of the Requirements Definition Review (RDR). The purpose of Part 2 was to prove concept feasibility.

The SSFF concept illustrated in Figure 2-1 is planned for three SSF International Standard Payload Rack (ISPR) locations in the U.S. Laboratory (USL) module of SSF.

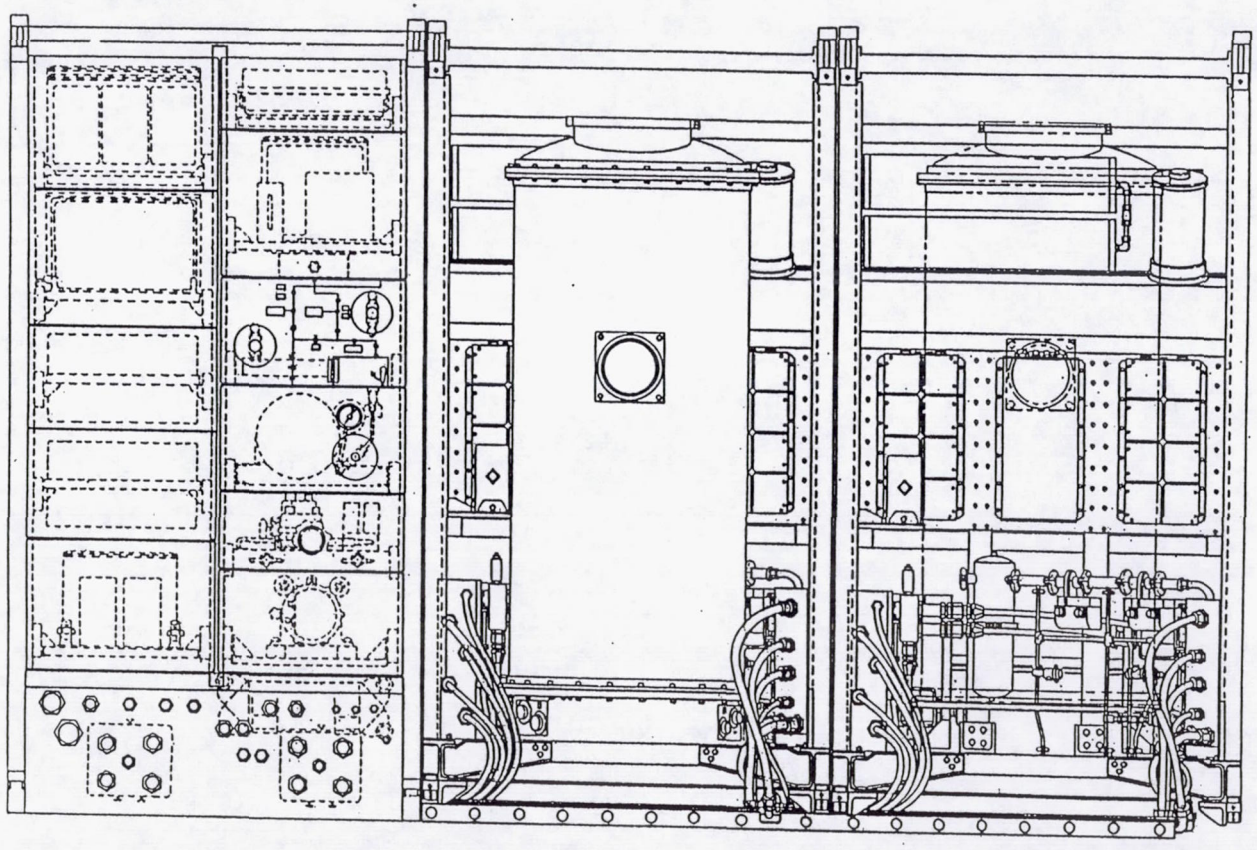

FIGURE 2-1: SSFF CONCEPT

3.0 OVERVIEW

The SSFF Study consisted primarily of two major activities: the development of the conceptual design and the demonstration of the concept feasibility using both the Development Model and Interrack Demonstration Unit. Also in the study were other SSFF activities undertaken in support of the Microgravity Science and Applications Division (MSAD) planning for payloads on the SSF. These included the following: MSAD user advocacy during the review of SSF capabilities and documentation; systems analysis and the generation of Space Station Furnace Facility (SSFF) interface requirements for mission planning activities; statusing the Science Community on SSF capabilities; and providing support in the implementation planning for SSFF development and operations.

The approach and methodology used for the SSFF conceptual design during the contract were as follows:

- Review the science requirements data in the Capabilities Requirements Document (CRD)
- Review existing furnace and furnace support system designs
- Review lessons learned from Development Models (Part 2 only)
- Develop conceptual designs
- Identify risk/cost driver requirements
- Present the impacts of risk/cost driver requirements at the Science Requirements Workshops (SRWs)
- Support followup technical interchange meetings with the Project Scientist and Furnace Developers
- Refine the concept based on any revisions to the CRD
- Prepare for each upcoming review.

This approach served two purposes during the conceptual design. First, it served to ensure that the facility design was responsive to the needs of the Science Community, and second, it served to identify cost drivers. As with all research payload developments, there must be a balance between the degree of fulfillment of science objectives and the associated impacts in terms of program risk and cost. The SSFF Study Team participation in the SRWs provided a forum to present the SSFF conceptual design to the Science Community and examine areas where the science requirements challenged or exceeded the current or projected state-of-the-art for a given capability. The SSFF Team prepared descriptions of concepts for implementing these capabilities; performed a wide range of specific trades resulting in alternate approaches; and prepared appropriate recommendations. Based

upon the material presented and subsequent splinter meetings, the CRD would be revised by the Project Scientist. Three SRWs were conducted to present technical data on the impacts of the critical requirements and present alternative approaches or capabilities that could be accommodated.

The Part 1 conceptual design activity spanned 15 months and included several significant events. There were two SRWs held for coordination with the Science Community utilizing a Payload Integrator (PI) working team from current furnace programs. An SSFF concept was developed and refined throughout the period of performance. An SSFF mockup was developed and installed into building 4755 at MSFC in support of a tour for Vice President Dan Quayle. A CoDR Board was appointed by the NASA Headquarters Program Manager, and a CoDR was held on August 20 and 21, 1990. (This was the first CoDR conducted for SSF payloads.)

On August 31, 1990, approval to proceed with Part 2 was received from NASA Headquarters, and the contract SOW was revised to reflect the recommendations from the CoDR Board. The scope of the contract was significantly increased with the addition of the following tasks:

- Demonstrate the Development Model using "real" furnaces
- Develop realistic venting requirements
- Assess options for reprogramming the SSFF
- Perform additional analysis and prepare reports for safety
- Assess Orbital Replacement Unit (ORU) optimization
- Develop a conceptual design of Furnace Module 1
- Develop a demonstration unit of the interrack cabling and lines
- Develop mission operational scenarios.

In addition to increasing the SOW, the CoDR Board recommended changes in the conceptual design including deletion of the Acceleration Monitoring System (AMS) and shifting the impacts of the furnace orientation system to the Furnace Module. The conceptual design was revised and taken as the basis for the SSFF Development Model. The SSFF concept was evaluated, and those areas of the design requiring demonstration were targeted for demonstration in the Development Model. A Development Model plan was generated and approved at the fourth Quarterly Review by the COTR, Project Scientist, and Chief Engineer. This plan required NASA MSFC to provide a furnace as Government-Furnished Equipment (GFE). After approval of this plan, detailed design and development was initiated. The Development Model was fabricated using existing technology and off-the-shelf commercial equipment to demonstrate the feasibility of the conceptual design.

After some delays in obtaining a GFE furnace, direction and further funding were given to build an additional furnace for demonstration test. In addition, an Automated Directional Solidification Furnace (AADSF) prototype was provided as GFE by the Space Science Laboratory (SSL), and a Transparent Furnace was developed by TBE. In the interim, the Development Model design progressed using reconfigurable load modules which could model a wide range of furnace performance characteristics and be used to evaluate the Core systems performance. This proved very useful in expediting the troubleshooting process during the integration of the furnaces into the Development Model. The system was used to operate and control these furnaces in parallel during the demonstration test at the Requirements Definition Review (RDR).

The CoDR Board also recommended that the concept for connections and cabling between adjacent SSF racks be demonstrated. This was added to the contract, and an Interrack Demonstration Unit (IRDU) was developed, modeling the lower portion of the racks. This unit was designed to conform to ISPR interface requirements. The IRDU was used to test the feasibility of rotating the racks independently without disconnecting services and to identify the modifications to the rack required for accommodating the cabling and plumbing.

As the Development Model was assembled, integrated, and tested, feedback pertaining to the function and performance of the Core equipment was incorporated into the conceptual design. Likewise, physical data such as accessibility requirements and the impacts of routing fluid lines and connectors were incorporated into the conceptual design from the mockup development and IRDU. The addition of this hardware development added another step in the methodology used during Part 1. This step incorporated feasibility and packaging data from the hardware development activities into the conceptual design.

Throughout the contract support, action items were satisfied by performing system engineering analyses of the SSFF conceptual design and comparing the SSFF interface and resource requirements to the capabilities being provided by SSF. Problems and impacts were identified and assessed. The SSFF Study played a major role as a User Advocate of payload requirements to the SSF.

4.0 CONTRACTOR TASKS

The Contract Statement of Work (SOW) defines the tasks performed. The activities performed on this contract are summarized in this section. Each SOW paragraph has a corresponding paragraph below that describes the work performed, approach used, and products produced.

4.1 FURNACES' CONCEPTUAL DESIGN (SOW 5.1)

One of the first tasks in the SSFF SOW is the conceptual design of candidate furnaces to define the resource and interface requirements for the SSFF. The SOW referenced a candidate list of furnaces provided in paragraph 3. Concept reports for the Crystal Growth Furnace (CGF), Metals and Alloy Solidification Apparatus (MASA), Hot Wall Float-Zone Module, and Visibly Transparent Furnace were developed and presented at the Conceptual Design Review (CoDR). The concept for the CGF actually encompassed four furnace concepts in one report — a High Gradient Directional Solidification Processing Furnace, a Low Gradient Directional Solidification Processing Furnace, a Vapor CGF, and a Programmable Multi-Zone Furnace (PMZF). These furnace concepts were used as the basis for evaluating the science requirements provided in the Capabilities Requirements Document (CRD), JA55-032, and estimating the engineering and accommodation requirements for Furnace Modules. For example, the CRD specifies hot-zone temperature, hot-zone length, number of zones, and ampoule diameter. The furnace concepts were used to generate estimates for furnace requirements including volume, mass, power, heater element leads, and thermocouple leads. The Core design was then developed to provide the resources for these furnace requirements. Concept reports were developed for the CoDR to complete this activity. These reports are included in Appendix 6. For the first Science Requirements Workshop (SRW), concepts for the Large Bore Bridgman (LBB) and High Pressure Furnace (HPF) were generated and presented to the Science Community. Modification Number 4 to the contract directed that these concepts not be used to drive the design of the SSFF Core. The conceptual design of the LBB and HPF was completed with the presentation material presented at the SRW. No conceptual design was formulated for the Interface Radiographic Module (IRM) because design data were not mature enough to provide sufficient detail for SSFF Core requirements, and the contract specifically states "a conceptual design shall not be formulated."

4.2 SSFF MODULE 1 CONCEPTUAL DESIGN (SOW 5.1.1)

Modification Number 11 to the contract SOW directed the development of a detailed conceptual design based upon the CGF as a strawman furnace for the SSFF Core. A Module 1 concept report is included in Appendix 6. The report concluded that a Module 1 Furnace is feasible.

4.3 FURNACE CORE FACILITY DEFINITION AND CONCEPTUAL DESIGN (SOW 5.2)

This task was the major thrust of the contractual effort for Part 1 of the contract. It included the definition of Core facility requirements and the preliminary design, analysis, interface definition, and documentation required to ensure that the scientific/user capability requirements are met. Also, included were the following specific subtasks:

- Systems analyses and Materials Science Application Division (MSAD) user representation to the SSF
- Development of realistic venting requirements
- Development of missions operations scenarios
- Design of a facility configuration, assessments of adapting this configuration to other carriers
- Development of facility mockups
- Preparation and support of a CoDR.

Products of this task were a definition of the SSFF Core and the conceptual designs of the subsystems that comprise the Core. The concept was periodically reviewed at Quarterly Reviews, SRWs, the CoDR, and the Requirements Definition Review (RDR).

The SSFF Core Systems block diagram is illustrated in Figure 4-1. It consists of five subsystems that interface with the SSF resources and convert or augment these resources to meet the requirements of the furnaces. These subsystems include the Data Management Subsystem (DMS), Gas Distribution Subsystem (GDS), Power Control and Distribution Subsystem (PCDS), Thermal Control Subsystem (TCS), and the rack replacement structures with mounting hardware for the rack packaging.

The DMS interfaces with the SSF DMS for status monitoring, access to SSF ancillary data, data downlink, and data uplink. The DMS provides the command and control functions of the SSFF Core subsystems and the distributed signal conditioning and control functions for the furnace operations. The DMS also provides data storage and video processing functions.

The GDS provides the Furnace Module access to the SSF Vacuum Vent System and and gaseous nitrogen supply. The GDS also provides a supply of inert gas, such as argon, for backfilling the Furnace Module and provides contamination monitoring of the vent gases.

The PCDS conditions and distributes the 120-Vdc power of the SSF to the power required by the furnace heater elements, translation motors, etc.

The TCS provides a secondary cooling loop to isolate the Furnace Modules from the SSF TCS cooling fluid.

The rack replacement structures and mounting hardware provide the structure for transporting the Core to the SSF and housing the facility at three International Standard Payload Rack (ISPR) locations. The selection and packaging of the SSFF Core components emphasizes modularity and on-orbit changeout to accommodate advanced furnaces.

The capabilities of the SSFF and more detail on each subsystem are available in the Summary of Technical Reports included as Part 6 of this volume. The Preliminary Contract End Item (CEI) Specification which was delivered to Marshall Space Flight Center (MSFC) in March of 1992 is included in Part 1 of this volume. The document was updated by MSFC internal review and placed under configuration control. The version released in March is no longer accurate and, to avoid confusion, the updated copy from MSFC was included in this Final Report.

4.4 SYSTEM ANALYSIS AND REQUIREMENTS (SOW 5.2.1)

A major SSFF study task was the representation of user requirements and performance of special analyses to define, measure, support, and explain microgravity payload requirements. The SSFF Study Team participated in SSF Preliminary Design Reviews (PDRs) and reviewed documentation to support development of Review Item Discrepancies (RIDs) for SSF Work Packages 1 and 2. The Team monitored the SSF restructuring activities and identified impacts on SSF operations and accommodation. The team also represented the MSAD User Community and developed justification for the resource and interface requirements imposed on the SSFF. Data were generated as required for incorporation into the databases used for incorporation to the SSF including SUMTIS, ESUMITS, and MSAMs. Explanations of requirements and estimates based upon different ground rules or conditions were generated on a weekly and sometimes daily basis throughout the contract. A database file was maintained with the current requirements information. An Experiment/ Facilities Requirements Document (E/FRD) contains the latest version of the requirements

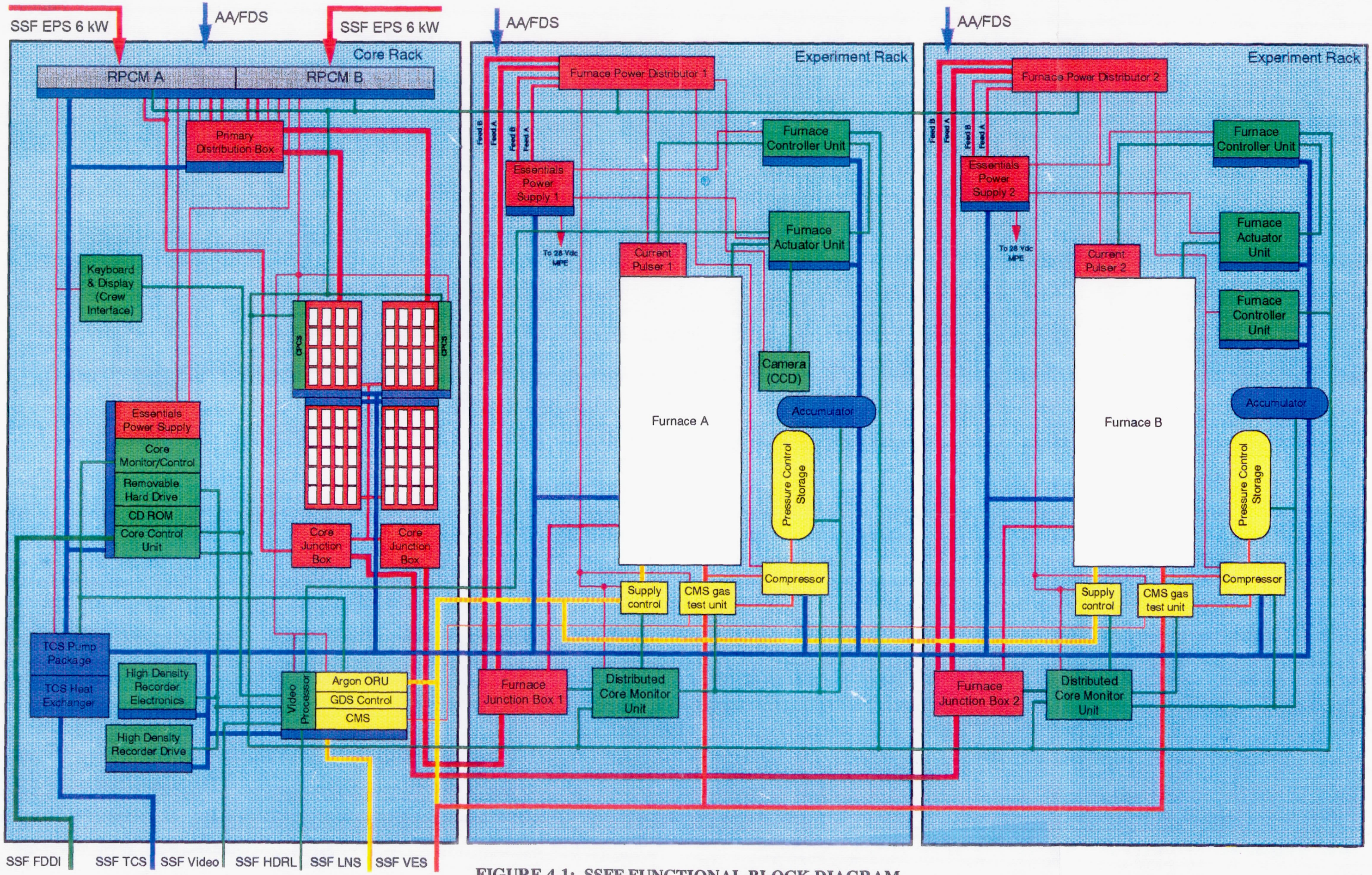

FIGURE 4-1: SSFF FUNCTIONAL BLOCK DIAGRAM

data for the SSFF, based on the CGF and PMZF strawman, and is included as Part 5 of this volume.

4.5 VENTING REQUIREMENTS (SOW 5.2.1.1)

After the CoDR, the SOW was modified to add a task to support requirements input to the SSF. This task was to define realistic venting requirements for furnaces and justify MSAD requests for less restrictive access to venting. The task consisted of three distinct actions. First, a series of vent gas and particulate test samples were obtained during sample processing runs of the CGF Ground Control Experiment Laboratory (GCEL) unit and the Advanced Automated Directional Solidification Furnace (AADSF). The samples were analyzed, and data on constituents were compiled into a database for analysis. A review of the levels of the materials in the gas indicated that all materials (except argon used during processing) were below the Spacelab Maximum Allowable Concentration (SMAC) values. The second task required a survey of industrial furnace applications to obtain information on furnace venting. No data were available for these industrial activities because no data had been collected by the Environmental Protection Agency, justified on the grounds that the amounts of effluents generated were considered insignificant. The third task was the development of Engineering Change Requests (ECRs) for USML-1, IML-1, SL-J, and SL-D2 to transfer the vent line back to MSFC after the mission for analysis. A procedure was developed and included with the ECRs for the process of collecting samples from the vent lines.

4.6 MISSIONS OPERATIONS SCENARIOS (SOW 5.2.1.2)

Another task added to the contract with Modification Number 11 was to support mission planning by developing operational scenarios and timelines of furnace operations. This task supported the systems analysis and generation of mission requirements timelines for SSF planning. Furnace operational data were timelined based on representative crystal growth experiments for HgZnTe, CdTe, GaAs, and HgCdTe. Fifteen different scenarios were generated using different samples and process sequences to provide a representative range of the total facility operational timelines. Seven scenarios were generated for man-tended operations, and eight scenarios were generated for permanently manned operations. Scenarios were included for emergency shutdown and safing of a furnace after loss of an SSF power bus. Timelines were generated for power, thermal heat rejection, crew, data generation, purging, and microgravity sensitivity. These furnace operational scenarios were combined to form SSFF mission scenarios. The initial mission scenario for the SSFF

consisted of the Core and Furnace Module 1. It was produced by combining the Man-Tended Capability (MTC) furnace operation scenarios 3 and 4. The mission scenarios for the Permanently Manned Configuration (PMC) of Furnace Module 1 and Furnace Module 2 were taken as MTC scenario 9. All scenario data were presented at the RDR.

4.7 FACILITY CONFIGURATION (SOW 5.2.2)

The development of a facility configuration was a central task in the Furnace Core Facility Definition and Conceptual Design. The selected facility configuration was based upon candidate furnaces listed in the SOW and the science capabilities identified in the CRD, JA55-032. The configuration required to operate the strawman furnace complement of the CGF and PMZF was presented at the RDR. It was conceived as a modular and reconfigurable facility which could be modified on orbit to operate other candidate furnaces in the CRD. Core subsystems were produced such that capabilities and resources could be redistributed to support particular mission complements. For example, capabilities such as video processing were not required for CGF and PMZF operation, but the SSFF Core DMS concept includes a video processor and mass data storage tape unit for use with other furnace. It is recommended that the video processing components not be incorporated in the SSFF until a furnace requiring this capability is deployed. The resulting available volume and mass could be used as a contingency or allocated to other systems.

The status and conceptual design of the SSFF Core was presented at each SRW, each Quarterly Review, the CoDR, and finally the RDR in the configuration current at the time of the meeting or review. The configuration presented at the RDR was the final concept for the SSFF.

4.8 SSFF CONFIGURATION ADAPTABILITY (SOW 5.2.2.1)

This task required, to the extent possible, a determination of whether the SSFF Core could be adapted to fly in the JEM or Columbus Modules of the SSF, and whether the SSFF Core could be adapted to a free-flyer of TBD design. Preliminary Requirements Review (PRR) documentation of the JEM and Columbus Modules was released during the study. After a review of the data in these documents, it was determined that there was insufficient information to determine if the SSFF Core could be adapted to these modules. Likewise, there were no data available on the TBD design of the free-flyer. Therefore, no determination could be made regarding the ability to adapt the SSFF Core for this application.

4.9 FACILITY MOCKUPS (SOW 5.2.3)

During the Part 1 contract, a mockup of the SSFF Core was developed and installed in the SSF mockup at building 4755 at MSFC. During a visit by Vice President Dan Quayle, the SSFF mockup was a featured stop and included an active computer and two displays. The system ran an automated control simulation after being activated by the Vice President. The unit was delivered and set up for the tour on August 2, 1989, and remains at building 4755.

During Part 2 of the contract, a high-fidelity physical mockup was developed to mount on top of the Interrack Demonstration Unit (IRDU). This activity was added in Modification Number 22. The unit was developed by incorporating the preliminary results from the Orbital Replacement Unit (ORU) assessment task and was used to identify human factor issues and test accessibility in the packaging of the SSFF. The mockup was also used to demonstrate and evaluate packaging configurations and candidate system layouts for the equipment. This mockup was a featured tour for the RDR Board.

4.10 CONCEPTUAL DESIGN REVIEW (CoDR) (SOW 5.2.4)

The major milestone which completed Part 1 of the contractual effort was the CoDR. It was held August 20 and 21, 1990, at MSFC. The design presented at the CoDR was based on the requirements in the CRD at the time of the second SRW. The SSFF Team presented a summary of the conceptual design emphasizing the capabilities (as they related to the science requirements) and described the status of design driving science requirements. A major portion of the presentation was dedicated to addressing the SSF interfaces and capabilities as they impacted SSFF operations. A brief presentation of a preliminary Project Implementation Plan (PIP) and a draft Development Model Plan for the Part 2 contract effort was included. The SSFF Study Team delivered a preliminary PIP, a Function and Performance Specification, a Summary of Technical Reports, a Preliminary Safety Analysis, and the CoDR Presentation Materials. The Function and Performance Specification was a draft input for the CEI Specification. The Summary of Technical Reports contained the conceptual design reports for each of the subsystems in the SSFF Core, concepts for each Furnace Module in the contract SOW, and trade study reports for each of the Trade Studies in paragraph 5.5 of the contract SOW. A Preliminary Safety Analysis (PSA) was performed in response to paragraph 5.10.6 in the contract SOW. The data in the PSA have been updated and incorporated into a latest hazard report format identified for the SSFF. These reports are included in Part 3, Volume II, of the Final Report.

The CoDR Board recommended the deletion of the Acceleration Monitoring System (AMS) from the SSFF because it was not a common requirement of all microgravity facilities. In addition, the Board recommended that the requirements for furnace alignment and magnetic damping be revisited by the Science Community. The CoDR Board also expressed concerns over the size of the five-rack configuration of the SSFF and availability of flight opportunities for such a large facility. However, shortly after the CoDR, this concern was resolved when the SSF restructuring activity forced the SSFF configuration to be reduced to a three-rack system. The resulting system is comprised of two Furnace Module racks and one Core rack.

The CoDR Board was also concerned about the Development Model approach of using furnace simulators. They requested that "real" furnaces be incorporated in the demonstration test plan. This request resulted in a change to the contract to use the CGF Demonstration Test Article (DTA) as the "real" furnace. However, schedule constraints for USML-1 precluded its use, so the contract was again modified to add provisions to supply a SSL AADSF as GSE and to task TBE to build a Transparent Furnace. The contract period of performance was also extended to accommodate these changes, and provisions for demonstration testing of the real furnaces was added.

The CoDR Board took issue with the number of safety constraints used in developing the conceptual design and recommended that the system not be over-designed for safety. A subsequent technical interchange meeting with the Spacelab Safety Panel at Johnson Space Flight (JSC) determined that the level of design for safety was appropriate but that restrictions on SSF venting should be relaxed to permit venting of furnace gases during nominal operations. To address these issues and concerns raised at the CoDR, the contract was modified to incorporate a task to obtain realistic data on the constituents of furnace vent gases.

The CoDR was successfully completed and Authority To Proceed (ATP) with the Option (Part 2) was awarded on August 31, 1990. In addition, a request for an estimate to incorporate the directions from the CoDR was received on December 6, 1990. A proposal was submitted and accepted. ATP for the modified SOW was received January 7, 1991, as contract Modification Number 22.

4.11 DEVELOPMENT MODELS DESIGN FABRICATION, ASSEMBLY, AND TEST (SOW 5.3)

After the award of Part 2, the activity for Development Models design, fabrication, assembly, and test was initiated based on the development plan presented at the CoDR. Modification Number 22 added CoDR direction to incorporate real furnaces.

The furnace provided by SSL was received in early January of 1992. On January 27, 1992, the first "smoke test" of the Development Model was successfully performed. On March 26, 1992, the Development Model was demonstrated operating two furnace load modules configured as different furnaces. On May 1, 1992, a demonstration test with the AADSF prototype and a load module operating simultaneously was successfully completed. On May 12 and 13, 1992, a demonstration test of the Development Model operating a Transparent Furnace and the AADSF prototype simultaneously was performed for the RDR Board. The Development Plan and Demonstration Test Plan is included in Appendix 6.

4.12 SCIENCE REQUIREMENTS (SOW 5.4)

Throughout the Study, major emphasis was placed on reviewing and understanding the science requirements. The SSFF Study and conceptual design was based on the science requirements data in JA55-032, Capabilities Requirements Document (CRD), dated August 11, 1988. The requirements in the CRD present performance requirements for experiment-specific hardware. For example, the CRD identifies parameters such as furnace hot-zone length and furnace hot-zone temperature which imply Core systems requirements such as the number of channels of power, the voltage per channel, and the current per channel. An initial analysis yielded estimates of the resource requirements such as power, data downlink, and thermal rejection to be levied on the SSFF Concept. The first SRW supported by the SSFF Study Team was held in September of 1989. This review addressed initial concepts and preliminary trade studies related to design driver requirements. The CRD was updated on March 8, 1990, and a second SRW was held on May 21 and 22, 1990. A third SRW was held in October 28 and 29, 1991. The CRD was revised after these meetings based on inputs from various working groups. The final revision of the CRD was completed January 27, 1992, and this version was used for the conceptual design presented at the RDR.

4.13 TRADE STUDIES (SOW 5.5)

During the Study contract, several trade studies and analyses were performed to support the SSFF conceptual design effort. The contract SOW identifies several specific trade studies and assessments that were to be addressed during the effort. These trade studies are listed below:

- Furnace Facility Breakpoints
- Orbital Replacement Unit Assessment
- Impact of the Requirement for Furnace Orientation
- Hot Ampoule Exchange
- Ampoule Mounting
- Translation Mechanisms
- Impact of the Requirement for Magnetic Suppression
- Cost Driver Trades
- Core/Common Subsystems
- Reprogramming of Experiment Computers

4.14 FURNACE FACILITY BREAKPOINTS (SOW 5.5.1)

The Furnace Facility Breakpoints trade study was performed during Part 1 of the Study. An initial assessment of the modular configuration and commonality of furnace control functions was performed. This study, coupled with the Core/Common Subsystems task, identified the common subsystems in the SSFF Core Concept and concluded that furnace control and support functions could be standardized into common equipment for the majority of the furnaces identified in the CRD. This was a point of emphasis during the conceptual design. The study also identified issues associated with on-orbit integration, verification, maintenance, and repair.

An assessment of the optimum level of ORUs was performed for the Core and Module 1 concepts as a part of the Furnace Facility Breakpoints task. This assessment was used to define the packaging concepts for the SSFF Core. A mockup developed during the Option phase demonstrated these packaging configurations. All components except the rack cabling were configured such that they could be accessed for on-orbit replacement and/or repair. This assessment ensured the development of a modular reconfigurable design that can accommodate advanced furnaces. A complete report is enclosed in Appendix 6.

4.15 IMPACT OF REQUIREMENT FOR ORIENTING SAMPLE AXIS (SOW 5.5.2)

The impact of the requirement for furnace orientation was assessed prior to the second SRW. A review of the SSF configuration was performed, and the components of the residual g-vector were estimated and compiled at several locations in the SSF U.S. Laboratory (USL). Several concepts were developed for systems that could be used to rotate the furnace to align with the direction of the residual vector. The best location for the SSFF in terms of magnitude and direction of the residual g-vector was found to be in the ceiling on the aft side. This study concluded that the furnace must be rotated out of the rack envelope to align with the residual g-vector. This would greatly complicate the cabling and plumbing layout to the Furnace Module. Further, the CoDR Board expressed concern about the violation of the rack envelope and protrusion into the aisle. To eliminate this protrusion the furnace envelope would have to be reduced. This would necessitate either a decrease in the sample length or elimination of sample translation. This was subsequently identified as a trade that required active participation of each specific Principal Investigator (PI); therefore, the requirement to provide furnace orientation was allocated to the Furnace Module Developer.

4.16 HOT AMPOULE EXCHANGE, AMPOULE MOUNTING, AND TRANSLATION MECHANISMS (SOW 5.5.3, 5.5.4, 5.5.5)

Three trade studies were listed in the SOW pertaining to ampoules: Hot Ampoule Exchange, Ampoule Mounting, Translation Mechanisms. A summary report was developed that addressed the advantages and disadvantages of universal ampoule mounting devices, common translation equipment, and options for hot ampoule extraction. These trades were determined to be highly furnace dependent and, since the design of the Furnace Modules was too immature to perform these trade studies, the SRW Board directed that task be discontinued.

4.17 IMPACT OF THE REQUIREMENT FOR MAGNETIC SUPPRESSION (SOW 5.5.6)

Another assessment prepared for review with the Science Community was an impact assessment of the requirement for magnetic suppression or damping of the residual convective flows in the melted sample. Three types of magnetic systems were considered in this study: superconducting magnets, electromagnets, and permanent magnets.

Superconducting magnets were eliminated as a possibility because of the reliance on cryogenic cooling and the safety hazards associated with "quenching"

phenomena. A quench is basically an unpredictable loss of superconductivity in the magnet. Resistance returns to part of the magnet during quench and the current generating the magnetic fields is converted to heat. This heat then flashes the cryogenic fluid and large amounts of boiloff are created. The large vent gas amounts and consumable requirements, coupled with the risk of explosion, eliminated the superconducting magnet from consideration.

Permanent magnets were considered, but they tend to be quite large for the 2000-gauss fields required. Permanent magnets must be shielded during on-orbit installation of the furnace and magnetic sample suppression system as well as during the periodic sample harvesting between runs. This study identified the Spacelab limit for magnetic fields as 0.3 gauss at the surface of the payload. This field level is very restrictive, and magnetic shielding will be a major issue for all three types of magnetic systems.

Current technology for shielding is to place a material that has a very low reluctance path around the magnet. Typically these materials, such as mu-metal, are very dense. For 2000-gauss magnets the shielding mass would be prohibitively high for furnaces of significant size. Techniques for shielding using counter magnets to cancel out the field were also considered. In a similar manner, addition of these secondary magnet systems increased the weight nearly as much as the shielding Also, the stray magnetic field outside the secondary magnet would exceed the 0.3-gauss limit and still require passive shielding. Further, the use of a secondary magnet alters the desirable magnetic field passing through the furnace sample. In general, the use of magnetic damping would require very heavy shielding that probably cannot be launched in the integrated configuration because of the launch load limits.

For magnetic systems of significant size, the shielding will probably have to be assembled on orbit. Logistics activities associated with moving the magnet between the Shuttle and SSF and down the aisle of the laboratory could significantly impact the operations of magnetic storage media and might require shielding.

Electromagnets were recommended due to their lower mass and the ability to be deactivated during sample harvesting.

After the second SRW, the Magnetic Suppression System was allocated to the Furnace Module because the trades between magnet bore, field strength, sample diameter, furnace temperature, and shielding mass are specific to the Furnace Module design. This activity was completed and presented at the CDR.

4.18 CORE COMMON SUBSYSTEMS (SOW 5.5.7)

The contract SOW called for a trade on Core/common subsystems furnace-unique systems. This trade was combined with the Furnace Facility Breakpoints trade study and reported at the CoDR during Part 1. The activity was a continuous, interactive selection process. Results of this activity have led to the selection of the common subsystems in the SSFF Core. In summary, all functions related to the interfacing, conditioning, and augmentation of SSF resources would be handled by the common subsystems in the Core. The SSFF Core subsystems are defined in the concept reports and many of the assessments and trades are included in the Summary of Technical Reports.

4.19 COST DRIVERS (SOW 5.5.8)

A major thrust of the conceptual study effort involved assessment of the cost drivers and options for cost avoidance or cost reduction. The Cost Drivers Trade Study identified difficult-to-achieve science performance requirements and inadequate SSF resources which might significantly increase the cost of the SSFF development. These cost drivers were reviewed with the Science Community at each SRW. This interactive process identified several requirements that were revised by the Science Community to improve the science return on the SSFF. The SSFF Study provided the technical rationale and estimates of impacts for the Science Community to evaluate.

The SSFF will operate in the USL Module of SSF and will be subject to the safety constraints of the Space Station Freedom Program (SSFP). These requirements are not completely defined, but based on longer mission life and the requirements for on-orbit refurbishment; they are expected to be more severe than those of Spacelab. For example, longer missions would permit higher concentrations of materials to build up as well as subject the crew to longer periods of exposure. Because of the longer exposure time, SMAC values would have to be lower for most materials and the longer mission would further reduce the rate of offgassing which would exceed the SMAC value during the mission. In addition, SSF will not be returned to ground between missions where contaminants can be removed. Therefore, there is potential for material to accumulate over much longer periods of time, and SMAC values would be based on the 30-year life of SSF as opposed to the mission duration. Therefore, many materials accepted for flight on the Spacelab or middeck may not be acceptable on SSF.

This additional materials restriction could increase the amount of new hardware development and could pose a risk to the science performance of a payload. Materials used on a Spacelab furnace subsystem may have to be replaced with materials with different

thermal, mechanical, or electrical properties. To reduce the cost associated with the impacts of safety constraints, it is recommended that the usual safety assessments of payloads be accelerated so that these problems may be identified early in the design process where changes have the lowest cost impacts on projects.

Another cost driver associated with safety that was identified is related to current SSFP restrictions on venting potentially hazardous materials. Nearly all of the candidate materials identified for processing in the Furnace Modules of the SSFF contain toxic elements such as cadmium, mercury, lead, arsenic, and selenium. On Spacelab the vent line was used to maintain a negative pressure in the furnace canister and serves as one of the three levels of containment. If an ampoule should rupture, charge vapors are vented overboard. This is not currently permitted on SSF. To permit sample changeout, furnace changeout, or furnace reconfiguration on orbit, it may be necessary to break the third and possibly second level of containment in a furnace. For safety purposes, a purge gas would be vented through the furnace to remove any toxic or outgassed materials prior to crew access. Neither process nor purge gases may currently be vented until verification that they contain no hazardous materials.

As a result, the SSFF will require the development of a Furnace Contamination Monitoring System. This subsystem would be part of the GDS. A concept for this system has been developed that utilizes both nondispersive infrared spectroscopy and x-ray fluorescence techniques for testing of the process and purge gases. The concept utilizes commercially available instruments, but further work will be required to determine the sensitivity of this system concept to the various furnace products. After PI selection, specific material detection schemes should be identified for the candidate experiments.

Processing of product gases will require the development of a Filtration/ Neutralization System. The SSFF Filtration System would likely involve multiple filtration stages incorporating particulate trapping, condensation, adsorption, and neutralization stages. The neutralization stage would be sample charge specific. In the event of an ampoule rupture and major furnace contamination, the furnace would be shut down and returned to ground for refurbishment.

The delivery schedule for DMS kits and SSF emulators did not match the SSFF schedule. In addition, DMS kits have been estimated to cost as much as $1M and would not be available until late 1991. This would have been late in the development of the SSFF breadboard, so these kits were not used. The original requirements for acceleration monitoring pressed the state-of-the-art in acceleration measuring capability. There were

two options for obtaining resolution and accuracy to satisfy the requirements. The first was the Orbital Acceleration Research Experiment (OARE) System which uses a Bell MESA triaxial accelerometer with a high gain proof mass constrainment under microprocessor control. This system flew on a Shuttle experiment in late 1991. The OARE System has a cost of $5M and would require a Signal Processing Unit with an estimated cost of about $1M to interface with the SSF downlink and high data storage system. The OARE has an accuracy goal of 10 nano-g and a primary axis resolution of 3.1 nano-g in an extremely quiet environment. Total cost for an OARE-based system was estimated at $7M. The second approach would be to construct a system using a standard set of Bell MESA accelerometers. The Bell MESA accuracy is full-scale range dependant, and the SSF environment was expected to be too noisy to achieve the accuracy requirements specified. However, the accuracy of a Bell MESA-based system may be improved if three MESAs in a triaxial configuration were used in conjunction with a gimbaled active isolation system (optically sensed with electromagnetic damping). This system would permit on-orbit calibration for null bias and achieve an accuracy of 1 times 10-8 g for a cost of $11.7M for two stations with calibration redundancy, electronic signal processor and controller, and high-density data recorder. If the requirement for accuracy were reduced to 5 times 10-8 g, then a system based on the Sundstrand ASDA or comparable single axis accelerometer could be utilized. The Vibration Isolation System would be much less complex due to the Sundstrand ASDA's greater dynamic range and tolerance to vibration-induced error. Vibrations as high as 5 times 10-4 g at 1 Hz, similar to that produced by the crew exercise treadmill, can be tolerated by the ASDA in tests performed by the Air Force. The accelerometers with gimbals and calibration redundancy would cost approximately $3M. The total system with signal processing and control electronics and data storage would cost about $5M.

All of the previously described accelerometer systems would have a severe volume and mass impact on the SSFF in addition to the high cost. Based on presentation of this information at the CoDR and Science Workshops, the AMS was deleted from the SSFF requirements. SSF is currently being lobbied to provide an AMS for the USL.

The SSFF was originally required to provide a system for aligning the furnace bore (sample growth axis) with the residual g-vector. It was estimated that a Furnace Orientation System incorporating active alignment would cost approximately $12M to develop. This cost would include accelerometers, drive motors, controls, a special rack mounting structure, flexible interfaces, and either a three-axis gimbal or strut-based positioning system. A Manual Orientation System which could align the furnace with the

mission average residual g-vector could be developed for approximately $3M. The requirement for this system would also have considerable impact on the Furnace Module design. Smaller furnaces would be required to avoid exceeding the rack volume. Because of the experiment module specific nature of this system, and space and cost considerations, this requirement was removed from SSFF and allocated to the Experiment Module Developer.

The SSFF Thermal Control System contains quick-disconnect fittings to allow installation and removal of the various subsystem components. Current quick-disconnect fittings are not zero leakage devices and do not prevent capture of small quantities of gas during operation. Air entrainment and fluid leakage during quick-disconnect fitting insertion and removal may result in fluid system performance degradation. This would require periodic degassing and increase the frequency of fluid recharging. This problem is common to other SSF users incorporating fluid systems in their experiments, and the SSFP will be addressing this problem for the SSFP subsystems that require on-orbit maintenance and assembly.

At the second SRW, incorporation of a CD-ROM storage technology was requested for mass data storage. Optical recording is a relatively new technology and is at a disadvantage on a cost and power basis when compared to high-density magnetic tape storage media. While optical disc storage media offers the advantage of random access, tape-based systems were an acceptable alternative since random access was not required. The use of high-density tape also builds on existing flight hardware designs and eliminates technology development risk. CD-ROM technology could be added to the system as an ORU as the technology matures.

Video capabilities will not be required until either a Transparent Furnace, Hot Wall Float-Zone Furnace, or Vapor CGF is deployed. Because of the rapid pace of technology in the area, it has been requested that the SSFF accommodate a state-of-the-art Video System at the time of the mission. It was recommended that the Video System be deferred until a furnace system requiring video is deployed to allow the initial system cost to be reduced and state-of-the-art technology to be incorporated at the time of utilization. The modular approach of the Video System architecture will support these recommendations.

4.20 OPTIMUM MEANS OF REPROGRAMMING EXPERIMENT CONTROL (SOW 5.5.9)

Another task added after the CoDR was to assess a variety of options for transporting software to and from the SSF. A trade study was performed comparing various technologies for this purpose. A Summary Report is included in Appendix 6.

4.21 SOFTWARE REQUIREMENTS (SOW 5.6)

Software tasks were required in paragraph 5.6 of the contract SOW to define preliminary software/firmware requirements for microprocessor control of furnace functions, concept definition of a modular software approach, and definition of Ground Support Equipment (GSE) software requirements for laboratory test of flight furnaces. The preliminary software/firmware requirements for microprocessor control of furnace functions is defined in the Software Concept Report in Appendix 6. This concept is modular and can be upgraded for advanced Furnace Module. The Study Team also participated in SSF reviews of the Payload Executive Software (PES) and reviewed the WP-01 Applications Generator (AG). In addition, the Development Model activity defined and developed software that operates furnaces integrated in the Development Model. Ground laboratory testing could be performed in furnaces using the SSFF Development Model and the software developed for this activity. DTAs of future flight furnaces could be tested using the SSFF Development Model to verify interface and system compatibility.

4.22 PRELIMINARY CONTRACT END ITEM (CEI) SPECIFICATION, PART 1 (SOW 5.7)

A preliminary CEI Specification, Part 1, was developed for presentation at the CoDR. It was updated and delivered in March 1992 and is submitted as Appendix 1. The CEI Specification was delivered to the COTR in March to permit an internal review and release in a draft SOW. To avoid confusion, the version produced after MSFC review is included in this Final Report rather than submitting the original version delivered under the contract. This version was obtained from the draft RFP released May 15, 1992. The original input delivered for contract submitted is consistent with the format and requirements in Data Requirement (DR)-7.

4.23 GROUND SUPPORT EQUIPMENT (GSE) (SOW 5.8)

A preliminary definition effort was performed to identify general GSE requirements. A report is included as Appendix 8 of this volume. This report identifies the

flow for functional and interface verification of the flight unit. GSE test sets are identified and described for the SSFF Core and Furnace Modules.

4.24 PRELIMINARY EXPERIMENTS/FACILITY REQUIREMENTS DOCUMENT (SOW 5.9)

A preliminary E/FRD was developed in the format of a Spacelab Experiment Requirements Document (ERD). This document contains requirements for a strawman mission using CGF and PMZF. The document is an example of how an E/FRD could be prepared, and the requirements summarize systems analysis and requirements definition activity for the SSFF conceptual design. Throughout the contract these requirements were submitted to the SSF through various user assessment mechanisms. The document was developed in accordance with DR-10 and is included in Appendix 5.

4.25 PROJECT PLANNING TASKS (SOW 5.10)

A preliminary PIP was developed for the CoDR, updated at the RDR, and is submitted in this Final Report as Appendix 2. The PIP includes a time-phased logic network and master schedule of the Phase C/D effort with the critical path defined and risk assessment. This plan encompasses the entire Phase C/D development effort through integration and operations for the SSFF Core and two Furnace Modules. The document was developed in accordance with requirements of DR-4.

4.26 SCHEDULES (SOW 5.10.2)

Project schedules were developed and incorporated into the PIP. A time-phased logic flow was developed, and a critical path was identified. A risk assessment was performed and included in the PIP.

In summary, the SSFP schedule will be challenging due to parallel development of the Core and Furnace Modules. Timely delivery and interface of GSE, DTAs, and GCELs is essential. It is recommended that adequate numbers of DTAs, GCELs, and flight spares be provided to minimize risk associated with timelining the use of this hardware for integration testing and interface verification. As SSF missions move closer together in future years, schedule pressures will increase. The PIP addresses these issues in more detail and is included as Appendix 2.

4.27 WORK BREAKDOWN STRUCTURE (SOW 5.10.3)

A Work Breakdown Structure (WBS) complete with a WBS Dictionary was developed for the entire SSFP. This WBS served as the general outline of the PIP and was used as the basis for structuring the cost estimates in Volume III. This WBS is submitted in Volume III.

4.28 PROJECT COST DATA (SOW 5.10.4)

The Program Cost Estimate is submitted in Volume III. The estimate was developed based on the WBS and the PIP. In addition, the Hardware Logistics section in the PIP defines the number of copies of DTAs, GCELs, and Flight Units assumed in this cost estimate for the Core and Furnace Modules. The Program Cost Estimate was prepared in accordance with DR-6.

4.29 TECHNOLOGY REQUIREMENTS (SOW 5.10.5)

Six technology issues were identified for the SSFF during the Phase A/B study. These issues were reported to the COTR as they were identified and presentation material was developed for review. Each was discussed at SRWs, Quarterly Reviews, and the CoDR. The issues are listed below along with the resolution adopted by the project.

1. Thermal Control System - Air entrainment and fluid leakage during quick-disconnect fitting insertion and removal may result in fluid system performance degradation. This would require periodic degassing and increase the frequency of fluid recharging.

   Resolution: This problem will be common to other SSF users incorporating fluid systems in their experiments as well as SSFP developed systems. SSF will be addressing this problem, and SSFF will incorporate developments in this area. Normal fluid leakage requires periodic system recharging. MSAD should not embark on a separate development program for these technologies. The SSFP must solve these issues before the current design can be implemented.

2. Ampoule Failure/Contamination Detection - A reliable method is required to determine when a structural failure of the ampoule/cartridge occurs. Such a failure may result in leakage of the charge materials into the furnace enclosure. Contamination detection is a measure of materials in the process gas environment of the furnace enclosure released either through outgassing of components and/or failure of the ampoule.

   Resolution: The failure detection method may be specific to the ampoule charge material. Development of the failure detection sensor should therefore be allocated to the experiment module developer. SSFF will

support signal conditioning and data processing for the sensor, if required. A concept has been developed for a contamination detection system, and several vendors have been identified. Further work is required to determine the sensitivity of the system to potential furnace products. Selected sample and ampoule configurations should be identified and a trade selection process initiated during the Phase C/D.

3. Gas Distribution System Filter System Development - Removal of contaminant products from the furnace processing gas prior to venting may require a multi-stage filtration system. Filtration materials/techniques may be sample charge specific and material specific adsorption filters need to be identified.

   Resolution: This may be a technology development issue for some sample/cartridge materials. Breadboarding should be initiated to avoid technology development issues associated with filtration. This capability should assessed again after PI selection.

4. Acceleration Mapping System - The requirements for acceleration measurement in the CRD requires a very high accuracy accelerometer system that could operate over a very wide band of the frequency. Current accelerometers that could approximate the performance required in the CRD for the low frequencies would be saturated by the higher frequency environment expected on the SSF.

   Resolution: Acceleration mapping has been deleted from the SSFF. The mapping system has been deferred to SSF at the direction of the CoDR Board.

5. Video Processor - Because of the rapid pace of change in technology in this area, it is desirable to use state-of-the-art systems. The Video System should also provide for equipment upgrades.

   Resolution: The SSFF Video System utilizes a modular approach which will allow it to accept new equipment/technology as it becomes available. The video capabilities will not be required until a Transparent Furnace, Hot Wall Float-Zone Furnace, or Vapor CGF is deployed.

6. Data Management System - A CD-ROM has been requested for data storage. This request may involve utilization of unproven/new technology in a space flight system, since optical recording is a relatively new technology.

   Resolution: A high-density tape recorder has been specified for use in the SSFF. This system provides the required recording density at lower cost and power than a comparable optical storage system. Tape storage is acceptable since random access is not a requirement. The use of high-density tapes also reduces risk since it builds on existing flight hardware designs.

4.30 ENVIRONMENTAL ANALYSIS (SOW 5.10.6)

PSA was performed, and a report was issued at the CoDR. This report is included in Appendix 3 and identifies hazards based on the CoDR conceptual design. During the Option period, updated hazard reports were developed to be consistent with the SSFF format, and initial preparations were made to hold a Phase 0 Safety Review. Subsequent restructuring of SSF and the absence of an SSFP Safety Panel prevented this review. In addition, the SSFP documentation and requirements for the performance of planning for hazardous material handling, on-orbit verification, and configuration control were delayed. Modification 16 to the contract SOW descoped these activities, and the corresponding funding reductions were applied to other efforts. The hazard reports address ampoule rupture, toxic materials, safing prior to maintenance, direct observation impacts, and float zone processing without ampoule to the extent they impact the SSFF Core design.

4.31 ON-ORBIT CONFIGURATION CONTROL AND SAFETY AND FUNCTIONAL VERIFICATION (SOW 5.10.6.6)

This task required the development of a plan for configuration control and safety and functional verification after activities such as repair, reconfiguration, or sample changeout. This task was descoped by Modification Number 16 and the concepts for configuration control, safety verification, and functional verification were completed to summarize the work performed prior to the contract modification. These reports are included in the Environmental Analysis of Appendix 3.

4.32 REQUIREMENTS DEFINITION REVIEW (SOW 5.11)

A RDR Board was appointed by the NASA Headquarters Program Manager, and the review was held on May 12 and 13, 1992, at building 3 of Teledyne Brown Engineering. This was the first RDR conducted for an SSF facility class payload. The conceptual design presented at the RDR was based on the CRD, dated January 27, 1992, and included developments resulting from the third SRW. The conceptual design presentations emphasized traceability of SSFF Core requirements to science requirements. Likewise, specifications in the CEI Specification were traced to the revised CRD.

Mission implications of the SSFF were assessed during the presentation of the Mission Operational Scenarios. Scenarios were generated for a variety of different furnace operation cycles in man-tended and permanently manned modes of operation. Timelines were presented for power consumption, heat rejection, data generation, crew utilization,

and purging. In addition, the E/FRD was delivered complete with example data for the Core and furnace requirements.

In addition to the presentations, the RDR included two lab tours. The Development Model was demonstrated to the RDR Board, and included operation of the SSL furnace and the TBE-developed Transparent Furnace during the first tour. The second tour demonstrated initialization of the Development Model. In addition, the Facility Mockup integrated on the IRDU provided a high-fidelity physical representation of the conceptual design.

Data Requirements documents delivered at the RDR included the PIP, E/FRD, and the Performance Review Documentation. The Performance Review Documentation consisted of the viewgraph presentations, concept reports on each Core subsystem, a Demonstration Test Plan for the SSFF Development Model, and Summary Reports on the ORU Assessment, Reprogramming Strategies, and Mission Operational Scenarios.

4.33 PHASE 0 SAFETY REVIEW (SOW 5.12)

The hazard reports provided in Appendix 3 were updated in preparation for a Phase 0 Safety Review. The activity included travel to Houston for an informal meeting with the Spacelab Safety Panel where safety issues were discussed and assessed. SSF restructuring activity delayed the establishment of the SSF Safety Panel and Modification 16 to the contract SOW descoped this task and eliminated this review. This task then became a level of effort task to review and monitor the SSF Safety Documentation. This activity provided RIDs on NSTS 1700.7B Addendum 1, NHB 1700.7C, and SSP 30XXX.

APPENDIX 1

CONTRACT END ITEM SPECIFICATION

Document Contained in Separately Bound Book

APPENDIX 2

PRELIMINARY PROJECT IMPLEMENTATION

Document Contained in Separately Bound Book

APPENDIX 3

ENVIRONMENTAL ANALYSIS
(MIDTERM REPORT)

Document Contained in Separately Bound Book

APPENDIX 4

NEW TECHNOLOGY REQUIREMENTS SUMMARY

SPACE STATION FURNACE FACILITY
New Technology Summary

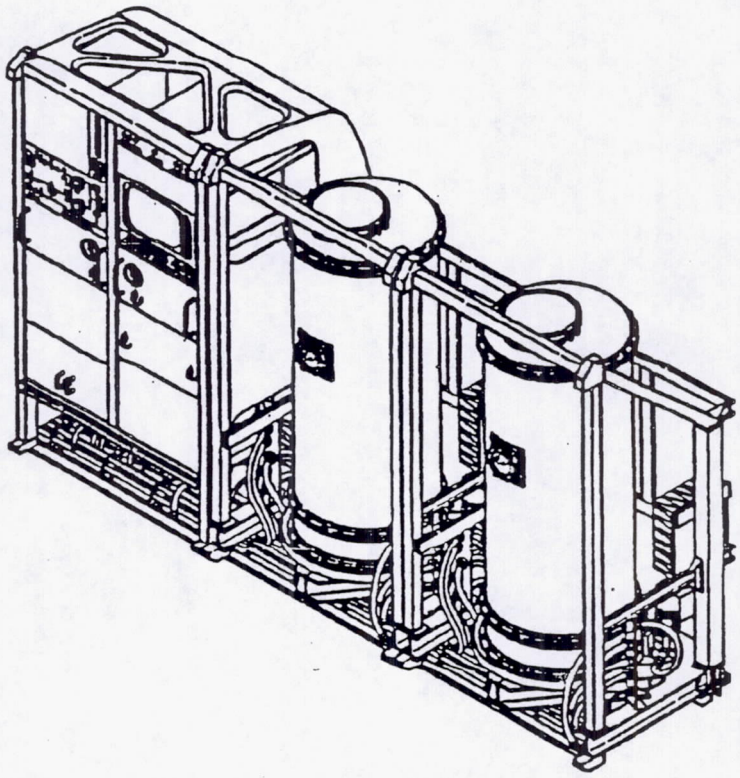

DR-2
May 1992

Volume II, Appendix 4
Final Study Report (DR-8) of
Space Station Furnace Facility
Contract No. NAS8-38077

TELEDYNE
BROWN ENGINEERING
Common sense ... uncommon innovation

Cummings Research Park • Huntsville, Alabama 35807

INTRODUCTION

This report was developed by Teledyne Brown Engineering as Part 4-New Technology Summary Report for Final Study Report (DR-8) of the Space Station Furnace Facility (SSFF), Contract NAS8-38077, under the auspices of Marshall Space Flight Center. This report summarizes the technology development issues and risk identified for the Phase C/D design and development of the SSFF. The resolution for each issue is provided.

The philosophy used during the SSFF Phase A/B has been to avoid technology development issues and the associated risk. During the conceptual design phase the science requirements and associated Core conceptual design were constantly compared with the state-of-the-art for a given capability. As the design matured seven technology shortfalls were identified. The COTR was notified as soon as the issue was identified and a presentation describing the issue, impacts, and alternatives would be presented at the next scheduled review (Quarterly, Science Requirements Workshop, and/or Conceptual Design Review). At the Science Requirements Workshops these presentations typically led to a revision of the science requirement.

The SSFF Phase A/B study consisted of a conceptual definition activity which involved the development of a breadboard demonstrating the flight concept configuration. The conceptual design did not result in a mature enough design to constitute a development of new technology. The breadboard development activity utilized off-the-shelf commercial grade equipment. There were no reportable new technologies developed under this contract. The Final Study Report (New Technology) is submitted in Appendix 7 in accordance with Data Requirement 9 of the contract.

SSFF Technology Development Issues

1. Thermal Control System - Air entrainment and fluid leakage during quick disconnect fitting insertion and removal may result in fluid system performance degradation. This will require periodic degassing and increase the frequency of fluid recharging.

Resolution: This problem will be common to other space station users incorporating fluid systems in their experiments as well as SSFP developed systems. Space Station Freedom Program will be addressing this problem. SSFF will incorporate Space Station developments in this area. Normal fluid leakage will require periodic system recharging; Recharge procedures developed by Space Station Freedom should be utilized. MSAD should not embark on a separate development program for these technologies. The SSFP must solve these issues before the current design can be implemented.

2. Ampoule Failure/Contamination Detection - A reliable method is required to determine when a structural failure of the ampoule/cartridge occurs. Such a failure may result in leakage of the charge materials into the furnace enclosure. Contamination detection is a measure of materials in the process gas environment of the furnace enclosure released either through outgassing of components and/or failure of the ampoule.

Resolution: The failure detection method may be specific to the ampoule charge material; development of the failure detection sensor should therefore be deferred to the experiment module developer. SSFF will support signal conditioning and data processing for the sensor, if required, through the FCU (Furnace Control Unit). A concept has been developed for a contamination detection system. Several vendors have been identified. Further work may be required to determine the sensitivity of the system to potential furnace products. Selected sample and ampoule configurations should be identified and a trade selection process initiated during the Phase C/D.

3. Gas Distribution System Filter System Development - Removal of contaminant products from the furnace processing gas prior to venting may require a multi-stage filtration system. Filtration materials/techniques may be sample charge specific; material specific adsorption filters will need to be identified.

Resolution: This may be a technology development issue for some sample/cartridge materials. Breadboarding should be initiated to avoid Technology Development issues associated with filtration. This capability should be further assessed after PI selection.

4. Acceleration Mapping System - The science requirements in the Capabilities Requirements Document (CRD) for acceleration monitoring and mapping exceeded the capabilities for accuracy and resolution of the current state-of-the-art. These requirements were scaled back after the second Science Requirements Workshop, but the accuracy requirements were such that the background acceleration environment of the SSF will likely saturate the accelerometers.

Resolution: Acceleration mapping has been deleted from the SSFF. The mapping system requirements have been deferred to Space Station Freedom.

5. Video Processor - Due to the rapid pace of change in technology in this area, it is desirable to accommodate the state-of-the-art. The video system should provide for equipment upgrades which currently exceed the state-of-the-art.

Resolution: The SSFF Video System utilizes a modular approach which will allow it to accept new equipment/technology as it becomes available. The video capabilities will not be required until a transparent furnace, hot wall float zone furnace, or vapor crystal growth furnace is deployed. The video system should be deferred.

7. Data Management System - A CD-ROM has been requested for data storage. This request may involve utilization of unproven/new technology in a space flight system. Optical recording is a relatively new technology.

Resolution: A high density tape recorder has been specified for use in the SSFF. This system provides the required recording density at lower cost and power than a comparable optical storage system. Tape storage is acceptable since random access is not a requirement. The use of high density tapes builds on existing flight hardware designs.

APPENDIX 5

EXPERIMENT FACILITY REQUIREMENTS DOCUMENT

Document Contained in Separately Bound Book

APPENDIX 6

TECHNICAL SUMMARY

Document Contained in Two Separately Bound Books

APPENDIX 7

FINAL REPORT NEW TECHNOLOGY

SPACE STATION FURNACE FACILITY
Final Study Report (New Technology)

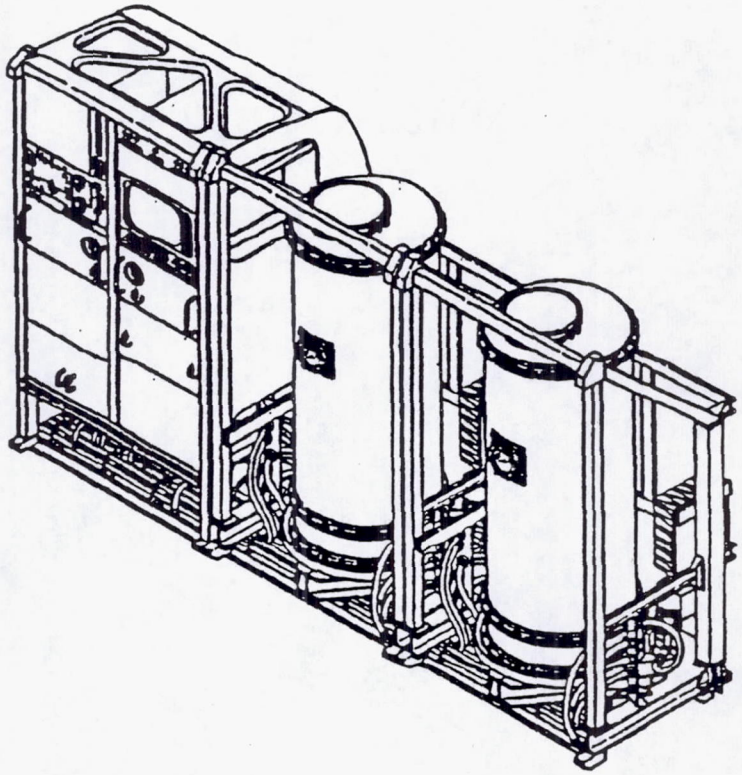

DR-9
May 1992

Volume II, Appendix 7
Final Study Report (DR-8) of
Space Station Furnace Facility
Contract No. NAS8-38077

TELEDYNE
BROWN ENGINEERING
Common sense ... uncommon innovation

Cummings Research Park • Huntsville, Alabama 35807