93R10305

TECHNICAL NOTES

NATIONAL ADVISORY COMMITTEE FOR AERONAUTICS.

No. 216

THE VELOCITY DISTRIBUTION CAUSED BY AN AIRPLANE AT THE POINTS OF A VERTICAL PLANE CONTAINING THE SPAN.

By Max M. Munk.

March, 1925.

NATIONAL ADVISORY COMMITTEE FOR AERONAUTICS.

TECHNICAL NOTE NO. 216.

THE VELOCITY DISTRIBUTION CAUSED BY AN AIRPLANE AT THE POINTS OF A VERTICAL PLANE CONTAINING THE SPAN.

By Max M. Munk.

Summary

A formula for the computation of the vertical velocity component on all sides of an airplane is deduced and discussed. The formation is of value for the interpretation of such free flight tests where two airplanes fly alongside each other to facilitate observation.

In certain kinds of free flight experiments with airplanes, a second airplane is used for the observation of the airplane to be tested. For instance, during some experiments of the flight section of the National Advisory Committee for Aeronautics, two airplanes were flown side by side. A cylindrical weather vane was suspended under one of the airplanes. An observer in the second airplane took photographic pictures under different conditions of flight in order to determine the angle of attack. The distance of the two airplanes was sometimes as low as one wing span.

For the interpretation of such tests it is desirable to be informed on the vertical velocity component of the air caused by the observing airplane in the region occupied by the airplane to be observed. This information is contained implicitly in Reference 1. For greater convenience I proceed to lay down in this Note the direct way to obtain this downwash.

The problem is, then, to determine the downwash sidewise of of an airplane in a moderate distance therefrom. The velocity distribution in the immediate neighborhood is affected by all details of the different parts of the airplane and its exact computation is near to impossible. At a great distance, on the other hand, the air velocity caused by a passing airplane becomes negligible. This appeals immediately to the common sense, and the remark seems almost obvious and trivial. It is not, however, as the same does not hold for the motion of the air in rear of the airplane. The wake of the airplane is maintained over quite considerable distances, it can be neglected only at much greater distances than the disturbance created at the sides, and on top and bottom.

An estimate of the downwash at the sides of the airplane in moderate distance will be obtained by substituting a monoplane of about equal span for the biplane cellule (if any) and by taking into consideration the two-dimensional flow caused by a lifting wing and discussed in Reference 1, Section III. It is shown there that a two-dimensional flow is gradually established by the wings,

and that in the vertical plane through the wings the same configuration of flow, but of half of the final magnitude in strength, will be found. For the purpose of this Note, it is sufficient to consider only the main term of this flow, - when expanded into a Fourier's Series - having reference to an elliptical distribution of the lift. This flow is of vanishing intensity at great distances from a straight line, representing the span. At the points of this span, the vertical velocity is constant, say, equal to u_o. Since the apparent mass of a straight line of the length 2a in a two-dimensional flow is equal to $a^2\pi$ (that is, when moving laterally) and since the momentum of the final flow set up per unit of time equals the lift created, u_o can be computed from the equation

$$a^2\pi \; V \rho \; u_o = L$$

$$u_o = \frac{L}{a^2\pi \; V \rho} \tag{1}$$

This is the final downwash far behind the wing. According to the remark just made the downwash at the points of the wing is half that magnitude.

$$u_1 = \frac{L}{4a^2\pi \; V \frac{\rho}{2}} \tag{2}$$

The problem is now reduced to the investigation of the potential flow around a straight line of the length 2a moving laterally with the velocity u_1 in a perfect fluid otherwise at rest. The complex potential function of this flow according to equation

38, of Reference 1, is

$$F = i\,C\left[\frac{z}{a} - \sqrt{\left(\frac{z}{a}\right)^2 - 1}\right] \tag{3}$$

in which

a = half span

L = total lift

V = velocity of flight

ρ = mass density of air

C is a constant, the magnitude of which will be determined immediately.

The velocity distribution is then obtained from

$$F' = \frac{dF}{dz} = i\,C\left[\frac{1}{a} - \frac{\frac{z}{a}}{a\sqrt{\left(\frac{z}{a}\right)^2 - 1}}\right] \tag{4}$$

where only the last term in the bracket is variable. The vertical velocity component is the imaginary part of (4), with reversed sign.

At the points of the span, the second term of the span becomes imaginary and hence, does not furnish a contribution to the downwash. At these points, equation (4) gives thus

$$u = \frac{C}{a}\,.$$

This constant downwash agrees with the one specified in equation (2), if $C = \dfrac{L}{4\,a'\,\pi\,V\,\frac{\rho}{2}}$. At the other points of the straight line containing the span, the vertical velocity component is directed upwards. The square root in (4) is then real, and the upwash becomes

$$u = C\left[\frac{1}{a} - \frac{x}{a\sqrt{x^2 - a^2}}\right]$$

where x denotes the distance from the middle of the span. At $x = \infty$, u becomes zero.

At all other points of the plane, equation (4) furnishes the negative or positive downwash. $z = x + iy$ has to be inserted, and the expression (4) has to be reduced to the form $v + ui$. This can always be done easily by fundamental operations. The real and the imaginary parts give, then, the two velocity components desired.

It is too cumbersome, and unpractical, to indicate the operation to be performed in a formula containing the two space variables x and y. It is more convenient to use an expansion of the downwash component, in a Fourier's Series, which rapidly converges at the region considered. I proceed to develop this Fourier's Series.

The variable term in equation (4) is

$$\frac{\frac{z}{a}}{a\sqrt{\left(\frac{z}{a}\right)^2 - 1}} = \frac{\frac{1}{a}}{\sqrt{1 - \left(\frac{a}{z}\right)^2}} = \frac{\left(1 - \left(\frac{a}{z}\right)^2\right)^{-1/2}}{a} \qquad (5)$$

Now the binominal expansion of $\left(1 - \left(\frac{a}{z}\right)^2\right)^{-1/2}$ gives

$$\left(1 - \left(\frac{a}{z}\right)^2\right)^{-1/2} = 1 + \frac{1}{2}\left(\frac{a}{z}\right)^2 + \frac{\left(-\frac{1}{2}\right)\left(-\frac{3}{2}\right)}{1 \times 2}\left(\frac{a}{z}\right)^4 - \frac{\left(-\frac{1}{2}\right)\left(-\frac{3}{2}\right)\left(-\frac{5}{2}\right)}{1 \times 2 \times 3}\left(\frac{a}{z}\right)^6$$

$$= 1 + \frac{1}{2}\left(\frac{a}{z}\right)^2 + \frac{3}{8}\left(\frac{a}{z}\right)^4 + \frac{5}{16}\left(\frac{a}{z}\right)^6 + \frac{35}{128}\left(\frac{a}{z}\right)^8 + \frac{63}{256}\left(\frac{a}{z}\right)^{10} + \cdots \qquad (6)$$

$$= 1 + 0.5\left(\frac{a}{z}\right)^2 + .3750\left(\frac{a}{z}\right)^4 + .3125\left(\frac{a}{z}\right)^6 + .2735\left(\frac{a}{z}\right)^8 + \ldots$$

Introducing now, polar coordinates

$$x^2 + y^2 = R^2, \quad \cos\varphi = \frac{x}{R},$$

the real part of (6) becomes, (according to Moivre's formula)

$$1 + 0.5000 \left(\frac{a}{R}\right)^2 \cos 2\varphi + 0.3750 \left(\frac{a}{R}\right)^4 \cos 4\varphi +$$

$$+ 0.3125 \left(\frac{a}{R}\right)^6 \cos 6\varphi + 0.2735 \left(\frac{a}{R}\right)^8 \cos 8\varphi + \qquad (7)$$

Hence the downwash becomes

$$u = \frac{L}{4a^2 \pi V \frac{\rho}{2}} \left[0.5000 \left(\frac{a}{R}\right)^2 \cos 2\varphi + 0.3750 \left(\frac{a}{R}\right)^4 \cos 4\varphi + \right.$$

$$\left. + 0.3125 \left(\frac{a}{R}\right)^6 \cos 6\varphi + 0.2735 \left(\frac{a}{R}\right)^8 \cos 8\varphi + \ldots\right] \qquad (8)$$

This is the desired formula.

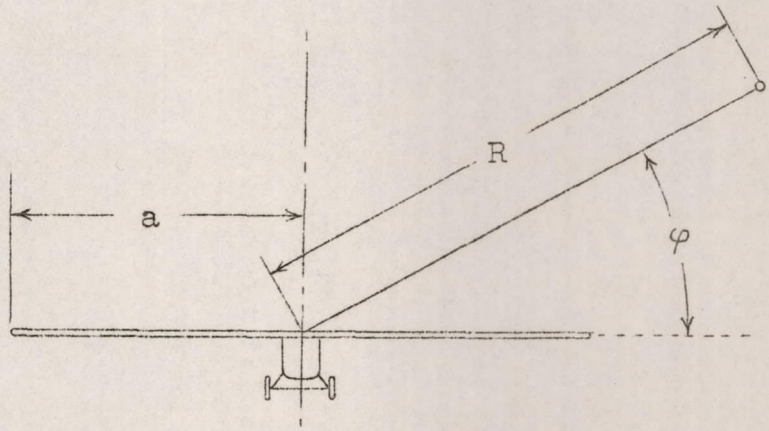

The figure shows the meaning of R and φ. R is the distance of the point from the middle of the span. φ is the angle between the radius R (connecting the middle of the span and the point with the span).

Numerical Examples

Let the weight of an airplane be $L = 3500$ lb., and its span $2a$ be 36 ft. The momentary velocity may be 80 mi./hr. The conditions are so chosen as to give comparatively appreciable downwash.

Consider first the point in the horizontal of the wing, one span from the tip, for which $R = 3a$ and $\varphi = 0$. The expression in front of the bracket is

$$\frac{L}{4a^2 \pi V \frac{\rho}{2}} = \frac{3500 \times 390}{36^2 \pi \times 80} = 4.2 \text{ mi./hr.}$$

The bracket is

$$\frac{0.5}{3^2} + \frac{0.375}{3^4} + \frac{0.3125}{3^6} + \ldots = \begin{array}{r} 0.055 \\ +0.005 \\ \underline{+0.000} \\ 0.060 \end{array}$$

Hence the negative downwash at the point is $0.06 \times 4.2 = 0.25$ mi./hr. and the angle of downwash $= \frac{0.25}{80} = 0.003 =$ rd. 1/6 of one degree. Repeat the same computation for a point in the vertical middle plane of the airplane one span on top of the wing, that is, $\varphi = 90^\circ$ and $R = 2a$. The conditions of flight might be the same, giving again 0.25 mi./hr. as factor in front of the bracket. The latter now becomes

$$-\frac{0.5}{2^2} + \frac{0.375}{2^4} - \frac{0.313}{2^6} + \frac{0.273}{2^8} + \ldots = \begin{array}{r} -0.125 + 0.024 \\ \underline{-0.005 + 0.001} \\ -0.1 \text{ mi./hr.} \end{array}$$

The angle of downwash = $-\frac{0.1}{80} \sim 7\%$ of one degree.

It appears from these examples that the angle of downwash decreases rapidly with the distance from the airplane. For practical cases it can probably always be computed exactly enough by using only the first term in the bracket of the final result.

Reference.

1. Max M. Munk: Elements of the Wing Section Theory and of the Wing Theory. N.A.C.A. Technical Report No. 191. 1924.