93R10456

TECHNICAL NOTES

NATIONAL ADVISORY COMMITTEE FOR AERONAUTICS

No. 366

TORSION IN BOX WINGS

By John B. Wheatley

Washington
February, 1931

NATIONAL ADVISORY COMMITTEE FOR AERONAUTICS

TECHNICAL NOTE NO. 366

TORSION IN BOX WINGS*

By John B. Wheatley

Summary

Logical analysis of a box wing necessitates the allowance for the contribution of the drag spars to the torsional strength of the structure.

A rigorous analysis is available in the use of the Method of Least Work.

The best logical method of analysis is that applying Prandtl's Membrane Analogy, in the form

$$S' = \frac{Q}{2A} .$$

The results so obtained vary by a negligible amount from those obtained by the rigorous method.

The stresses in the members of a box wing should be calculated by the membrane analogy method, but should be subject to verification by test before being used in design.

Scope

The scope of this paper is the analysis of the elements of a conventional type of box wing under a torsional load. This wing has as a primary structure two wooden box or I beams, their

*Thesis submitted in partial fulfillment of the requirements for the degree of Engineer in Mechanical Engineering Aeronautics, Stanford University, 1930.

maximum moments of inertia being about axes parallel, or nearly so, to the wind chord. They are connected by a plywood skin, forming the wing covering, in such a way that a cross section parallel to the plane of symmetry of the airplane forms a rectangle or a trapezoid. Figure 1 shows a typical box-wing cross section, the two spars proper being box beams, and the skin covering being plywood which forms part of the airfoil section. None of the formulas covered in this report take account of the curvature which in practically all cases is present in either the top skin or both top and bottom. It is believed that this factor is so unimportant that it would not be worth while to introduce the complexity attendant upon its consideration into the relatively simple formulas obtained when the curvature is neglected.

It is shown in this paper that the analysis of a box wing by rational methods results in the computation of much lower stresses in the various members of the box than are obtained when present design procedure is followed. As a means of simplifying the computations necessary in such an analysis, it will also be demonstrated that approximate methods, involving some reasonable assumptions, are available. Assuming the validity of this statement, which shall be proven subsequently, the value of this paper will lie in the application by the designer of its methods to reduce the material necessary to carry a given wing load; and by so doing, he will decrease the

weight of the wing structure.

Definitions and Nomenclature

Lift spar: A spar formed by two chord members connected by a web member, the chord members lying in a plane approximately perpendicular to the wing chord.

Drag spar: A spar formed by two chord members connected by a web member, the chord members lying in a plane approximately parallel to the wing chord.

Elastic centrum: A point in the wing structure in such a position that if the line of action of an imposed load passes through it, the load will cause no rotation of the cross section.

Included statically determinate structure: The part of a redundant structure which remains when enough of the redundant factors have been eliminated to make the remaining structure statically determinate.

Beam force: A force parallel to the intersection of the plane of the lift spar web and the plane of symmetry.

Chord force: A force parallel to the plane which bisects the dihedral angle, or the distance, between the planes of the two drag spars or trusses.

Conventions for Signs:

Forces: An upward beam force is positive. A rearward chord force is positive.

Moments: The torsional moment on the wing is a pitching

moment; therefore, we will consider a torsional moment positive which tends to increase the angle of attack.

Theory

The problem covered in this discussion is the division of torsional load between the various elements of a box wing. The necessity for new methods of analysis lies in the fact that the design rules of the Department of Commerce at present assume, in effect, that the resistance to torsion of the primary structure of a box wing is confined to the bending strength of the lift spars, that any lift load applied to the wing is divided between the lift spars in inverse ratio to the distance of the load from them, and that any twist on the wing is carried as a pair of equal and opposite beam loads. This method will result in the application of very severe loads upon the rear spar in the required design conditions of low angle of attack and nose dive. With most airfoils in common use, the center of pressure of a positive air load on the wing moves forward as the angle of attack is increased from a position aft of the trailing edge at zero or negative angles to a maximum forward position at about thirty per cent of the chord aft of the leading edge as the attitude corresponding to maximum lift is attained. In a nose dive, the forces acting upon the airplane are a down load on the tail, an up load on the rear spar, and a down load on the front spar - a condition corresponding to a resultant load acting a

chord length or more aft of the trailing edge. If we now resolve our load into an equal load acting at the elastic centrum and a torsion about the elastic centrum, we see that the torsional load is exceedingly severe in nose dive and this condition of flight will in a great many cases be the critical one for the rear spar. In all except very unconventional designs, the low angle of attack condition will be the critical condition of flight for the rear spar when nose dive is not; and in this condition as well, the resultant load is well aft of the elastic centrum, with a consequent high value of the torsional moment.

Due to the fact that the airfoil section limits the heights of the spars, with the rear spar as a general rule being the more shallow of the two, for a given value of the load the strength weight ratio of the rear spar tends to be smaller than that of the front spar. The saving in weight will be a material gain if it can be proven by a logical method that the actual loads in the rear spar will be smaller than those calculated by the design rules of the Department of Commerce.

The limitation of space prevents the consideration of more than one type of wing. For that reason a full cantilever, all-wood structure will be chosen, with the lift spars formed by two box beams, and the drag spar web formed by a plywood skin. A cross section of a typical wing is shown in Figure 1. Assume a torsional moment M applied at the elastic centrum. If the strength of the drag spars in torsion is neglected, the moment

is resolved into the loads w_F and w_R acting upon the lift spars, and equal to $\frac{M}{d}$. Now assume that a certain portion of the moment, M_d, is carried by the drag spars. Then w_F and w_R are obtained from the approximate formula

$$w_F = w_R = \frac{M - M_d}{d}.$$

And also

$$w_U = w_L = \frac{M_d}{h}.$$

A uniform load of w_F on the front spar, shown in Figure 1, will result in a bending moment on the spar, resisted by compressive stresses in chord member A and tensile stresses in chord member B. The load w_U in the upper drag spar, by the same reasoning, causes compressive stresses in member C and tensile stresses in member A. The lower spar, under the load w_L, is subjected to compressive stresses in member B and tensile stresses in member D. Lastly, the rear spar, under its load w_R, is subjected to compressive stresses in member D and tensile stresses in member C. Member A is then subjected to compression from w_F and tension from w_U; member B to tension from w_F and compression from w_L. All four chord members of the lift spars are not only withstanding a smaller load, but actually are subject in addition to stresses of an opposite sign which reduce their net stresses still further.

Referring to Figure 1 again, it is seen that under a torsional load the structure is redundant - we have four members and but three equations of equilibrium. The redundancy necessitates, for a rigorous solution, the use of one of the methods of consistent deformations, such as the method of least work. If rigor is not mandatory, certain simplifying assumptions may be applied, such as the neglect of the work done in shear, or the assumption of an undistorted cross section after the loading.

Four different basic principles are applied to the problem at hand to determine the eight formulas used here. The first neglects the strength of the drag spars; upon this, present design rules are based. The Theorem of Least Work generates the formula of that name and also the Inverse Ratio Method. The simplifying modifications of the Theorem of Least Work are responsible for the simplified Method of Least Work, the trapezoidal method, Niles' method, and Burgess' Moment of Inertia method. The Membrane Analogy is the basis for the formula of that name. It is reasonable to expect some correspondence between the results of methods developed from the same groundwork, and this expectation is realized in the work done.

The formulas to be derived in the remainder of the report will be applied to a sample spar, shown in Figure 2, in order

to obtain a comparison of the results. The length of this spar is 200 in., and the type is a full cantilever; the dimensions of the cross section are shown in the figure.

Present design practice.- The strength of the wing in torsion, neglecting the drag spar contribution, is equal to the bending strength of the lift spars. A torsional load will then be resolved into equal and opposite loads on the lift spars, and zero loads on the drag spars. Applying a torsion of unity per inch of span on the spar in Figure 2, the following values of the running beam loads are obtained:

$$w_F = 0.0286 \text{ lb./in.}$$
$$w_R = -0.0286 \text{ lb./in.}$$
$$w_U = 0.0 \text{ lb./in.}$$
$$w_L = 0.0 \text{ lb./in.}$$

The computations for this, and the remainder of the applications of formulas, to the sample spar, will be found in the appendix.

The Method of Least Work.- The method of least work was developed and proven rigorously by Castigliano; it states that the internal work done in a redundant structure by the application of external loads will be the least possible consistent with equilibrium.* The derivation and proof of this theorem will not be given here, since any textbook on elasticity or

*See Andrew's "Elastic Stresses in Structures."

advanced mechanics of materials contains the development in full. The application of this method to the problem at hand will take the following form: an expression for the total work done in the structure, in the terms of one of the unknown loads, will be set up, differentiated with respect to the unknown, set equal to zero, and solved. Since there are four unknowns and three equations of equilibrium, all except one of the unknowns may be eliminated from the expression for work, and one differentiation will serve to determine the solution.

The bending work done on a beam of constant cross section is easily expressed as

$$W_b = \int_0^L \frac{M^2 dx}{2EI}^*$$

where W = the internal work done in bending

M = bending moment of external loads

L = length of beam

E = modulus of elasticity

I = moment of inertia of cross section

x = distance along span.

This does not express the total work done in the structure, however, since the shearing work done in the beam must also be considered. The following development for the internal work done in shear on a box beam is taken from N.A.C.A. Technical Report No. 180, "Deflection of Beams with Special Reference to

*Spofford's "Theory of Structures."

Shear Deformations," by J. A. Newlin and G. W. Trayer. On page 18 of the report, we find

$$q_F = \frac{V}{It_2} \int_y^{K_2} t_2 y dy \tag{1}$$

$$q_W = \frac{V}{It_1} \left[\int_{K_1}^{K_2} t_2 y dy + \int_y^{K_1} t_1 y dy \right] \tag{2}$$

$$dW_S = \frac{q^2}{2F} t dy dx \frac{q_F^2}{2F} = t_2 dy dx \frac{q_W \; t_1 dy dx}{2F} \tag{3}$$

$$W_S = \int_0^L \int_{-K_2}^{K_2} \frac{q^2}{2F} t dy dx = 2 \int_0^L \int_{K_1}^{K_2} \frac{q_F^2}{2F} t_2 dy dx +$$

$$+ 2 \int_0^L \int_y^{K_1} \frac{q_W^2}{2F} t_1 dy dx \tag{4}$$

where L = semispan, or length of beam (in inches)

F = shearing modulus (for spruce, 1/15 E)

I = moment of inertia of cross section

K_1 = distance from neutral axis to flange

K_2 = distance from neutral axis to extreme fiber

t_1 = web thickness (inches)

t_2 = flange width (inches)

q = unit shearing stress (lb./sq.in.)

q_F = unit shearing stress in flange (lb./sq.in.)

q_W = unit shearing stress in web (lb./sq.in.)

V = total shear (lb.)

b = t_2

d = $2 K_2$ (symmetrical beam)

y = distance from neutral axis

x = distance along span

$$q_F = \frac{V}{It_2} \int_y^{K_2} t_2 y dy = \frac{V}{2I} (K_2^2 - y^2) \tag{5}$$

$$q_W = \frac{V}{It_1} \left[\int_{K_1}^{K_2} t_2 y dy + \int_y^{K_1} t_1 y dy \right] =$$

$$= \frac{V}{It_1} \left[\frac{t_2}{2} (K_2^2 - K_1^2) + \frac{t_1}{2} (K_1^2 - y^2) \right] \tag{6}$$

From 4 $$\int_{K_1}^{K_2} \frac{q_F^2}{2F} t_2 dy = \frac{t_2}{2F} \int_{K_1}^{K_2} \frac{V^2}{4I^2} (K_2^2 - y^2)^2 dy =$$

$$= \frac{V^2 t_2}{8FI^2} \left[\frac{8K_2^5}{15} - K_1 (K_2^4 - \frac{2}{3}K_2^2 K_1^2 + \frac{1}{5}K_1^4) \right] \tag{7}$$

Let $$\alpha = \frac{t_2}{8FI^2} \left[\frac{8K_2^5}{15} - K_1(K_2^4 - \frac{2}{3}K_2^2 K_1^2 + \frac{1}{5}K_1^4) \right] \tag{8}$$

and $$\frac{1}{2}W_{S_F} = \int_0^L \alpha V^2 dx \tag{9}$$

$$\int_0^{K_1} \frac{q_W^2}{2F} t_1 dy = \frac{t_1}{2F} \int_0^{K_1} \frac{V^2}{I^2 t_1^2} \left[\frac{t_2^2}{4} (K_2^2 - K_1^2)^2 + \right.$$

$$\left. + \frac{t_1 t_2}{2} (K_2^2 - K_1^2)(K_1^2 - y^2) + \frac{t_1^2}{4} (K_1^2 - y^2)^2 \right] dy. \tag{10}$$

Eq. 10 $$= \frac{V^2}{2FI^2 t_1} \left[\frac{t_2^2 K_1}{4} (K_2^2 - K_1^2)^2 + \right.$$

$$\left. + \frac{t_1 t_2 K_1^3}{3} (K_2^2 - K_1^2) + \frac{2}{15} t_1^2 K_1^5 \right] \tag{11}$$

Let
$$\gamma = \frac{1}{2FI^2t_1}\left[\frac{t_2^2K_1}{4}(K_2^2 - K_1^2)^2 + \right.$$
$$\left. + \frac{t_1t_2K_1^3}{3}(K_2^2 - K_1^2) + \frac{2}{15}t_1^2K_1^5\right] \tag{12}$$

Then
$$\frac{1}{2}W_{S_W} = \int_0^L \gamma V^2dx \tag{13}$$
$$W_S = 2(\alpha + \gamma)\int_0^L V^2dx \tag{14}$$

For a cantilever beam, uniformly loaded with w lb./in.,
$$V = wx\ ; \tag{15}$$
$$W_S = 2(\alpha + \gamma)\int_0^L w^2x^2dx = \frac{2}{3}(\alpha + \gamma)w^2L^3 \tag{16}$$

Equations for the internal work in a wing whose spars are not uniform in cross section are seldom expressible as functions of x. In such cases, a unit length of span will be treated as a uniform section, the value of the internal work on that unit length found, and the resulting equation treated exactly as the one here obtained to get the load division at the one point; the process is repeated until a curve of load division is defined, and then the running loads on each component of the box are known. The values of α and γ as determined by equations (8) and (12), are for symmetrical beams only. For beams having unequal chord members, only a very small error is introduced by using α and γ determined for an equivalent symmetrical beam having the same over-all height, width, and the same moment of inertia. This approximation will be necessary in almost all cases for computations concerning

the drag spars.

Having the expression for the bending work done, and the shear work from equation (16), in terms of the running load on the component of the box being considered, the work done will be expressed in terms of one variable by substitution from the equations of equilibrium, obtained by inspection from Figure 1.

$$w_U \cos \eta - w_L = 0 \tag{17}$$

Mom. at B

$$w_U h_1 \cos \eta + dw_R = M = 1 \tag{18}$$

(for moment of unity).

Mom. at D

$$w_U h_1 \cos \eta + dw_F = 1 \tag{19}$$

From these three equations, all except one of the unknowns in the total work equation for the spar may be eliminated; having the total work, then in the form

$$W_T = f(w_X) \tag{20}$$

differentiate W_T with respect to w_X;

$$\frac{\partial W}{\partial w_X} = f'(w_X) = 0. \tag{21}$$

This serves to determine w_X, and from the equations of equilibrium the remaining three unknowns may be found.

Applying this method to the spar of Figure 2, the following results are obtained by the calculations shown in the appendix:

$$w_F = 0.0168 \text{ lb./in.}$$

$$w_R = -0.0134 \text{ lb./in.}$$

$$w_U = 0.0590 \text{ lb./in.}$$

$$w_L = -0.0589 \text{ lb./in.}$$

An examination of the work in the appendix under this method illustrates the reason for not using the theorem of least work more often. The calculations are involved and tedious, with a great many chances for error, and no independent check. It does serve the useful purpose, in a paper of this kind, of constituting a check with which the other approximate methods may be compared.

Simplified Method of Least Work.- The example used for the computation by the least work method showed that the percentage of the total work done in shear was small. As a means of obtaining a simpler solution, the shearing work will be neglected as an approximation, and the load division will be found on the assumption that all of the work done is done in bending. The method for this calculation is exactly the same as for the complete least work method, the only difference being that the work done in the member has only one term in it instead of two. The expression for total work is again obtained in terms of one variable by the same equations of equilibrium; the equation is differentiated with respect to the

variable, equated to zero, and solved. The results on the sample spar are:

$$w_F = 0.0144 \text{ lb./in.}$$

$$w_R = -0.0103 \text{ lb./in.}$$

$$w_U = 0.0712 \text{ lb./in.}$$

$$w_L = -0.0710 \text{ lb./in.}$$

The difference between these results and those obtained by the rigorous method is due to the fact that the shearing work done in the different elements of the box is not a constant percentage of the total work in each element. In the front spar, the percentage of shearing work is 9.7%; in the rear spar, 4.4%; in the top and bottom spars, 38.1%. This is not unexpected, since the proportions of the elements are so dissimilar. As the spar becomes deeper and thinner, the bending work under a given load becomes less, while the shearing work is more (for a given cross-sectional area). The variation in the running loads obtained from those obtained by the rigorous solution is, for the lift spars, -14.3% in the front and -23.1% in the rear; for the drag spars, 20.7%.

Solution of a trapezoid.- Referring to Figure 1, it is seen as before that the three equations of equilibrium are insufficient to determine the four unknown loads. To eliminate the redundancy, the assumption shall be made that the cross

section suffers no distortion after a torsional loading; and as a simplifying assumption, consider the deflections of the various elements of the box as inversely proportional to their moments of inertia, which corresponds to the previous simplifying assumption of negligible shearing work.

If the cross section suffers no distortion after loading, the change in slope of two sides of the box may be equated; and the change in slope will be expressed by the equation

$$\Delta\theta = \frac{\delta_F - \delta_R - \delta_U \sin \eta}{d} = \frac{\delta_U \cos \eta - \delta_L}{h_1} \tag{1}$$

where

θ = torsional angle of twist

δ = beam deflection

η = angle between sloping drag spar and spar opposite

$$\delta = \frac{K\ w}{I} \tag{2}$$

where K is determined by the elastic curve of the beam, and will be the same for all elements of the box, on the assumption that the distribution of the drag load is similar to the lift load distribution. By substituting in (1), we find

$$\frac{1}{d}\left[\frac{K\ w_F}{I_F} + \frac{K\ w_R}{I_R} - \frac{K\ w_U \sin \eta}{I_U}\right] =$$

$$= \frac{1}{h}\left[\frac{K\ w_U \cos \eta}{I_U} + \frac{K\ w_L}{I_L}\right] \tag{3}$$

This equation, plus the three equations of equilibrium given before, will be sufficient to determine the values of the different loads. The solution of the set of four simultaneous equations in a general form is very cumbersome and should not be attempted. The process is greatly simplified by substituting numerical values in the simultaneous equations and then solving by any one of the standard algebraic methods. Such a solution, applying the constants of the sample spar, results in

$$w_F = 0.0140 \text{ lb./in.}$$

$$w_R = -0.0098 \text{ lb./in.}$$

$$w_U = 0.0731 \text{ lb./in.}$$

$$w_L = -0.0729 \text{ lb./in.}$$

The accuracy of this method of solution is poorer than the simplified least work results, the differences in the lift spar loads being -16.7% in the front and -26.9% in the rear; the drag spar difference being 23.8%.

Niles' Method of Load Division.- The basic assumption underlying a method developed by A. S. Niles, is that the cross section suffers no distortion during the application of a torsional load. As simplifying weapons, we also assume that the drag spars are mutually parallel, and are perpendicular to the lift spars, and that the shearing work may be neglected. The last two of these assumptions simplify the equation equating slope increment, to the form:

$$\frac{\delta_F - \delta_R}{d} = \frac{\delta_U - \delta_L}{h} \tag{1}$$

The term h must be approximated here. It seems reasonable to use that value of it which is obtained at the elastic centrum, assuming a linear variation from h_1 to h_2. This value is

$$h = h_1 - \frac{x}{d}(h_1 - h_2) \tag{2}$$

A further simplification lies in the fact that w_F and w_R are equal, as well as w_U and w_L. They can be expressed as

$$w_F = w_R = \frac{M_h}{d}, \tag{3}$$

and

$$w_U = w_L = \frac{M_d}{h}, \tag{4}$$

where M_h is the portion of the total moment which is resisted by the lift spars, and M_d that resisted by the drag spars. Substituting these values in (1),

$$\frac{1}{d}\left[\frac{K\,M_h}{dI_F} + \frac{K\,M_h}{dI_R}\right] = \frac{1}{h}\left[\frac{K\,M_d}{hI_U} + \frac{K\,M_d}{hI_L}\right] \tag{5}$$

$$\frac{M_h}{M_d} = \frac{d^2}{h^2}\left\{\frac{\frac{1}{I_U} + \frac{1}{I_L}}{\frac{1}{I_F} + \frac{1}{I_R}}\right\} \tag{6}$$

This does not give workable results. The fact that the section is a trapezoid means that there will be a lift component of the load in the slanting drag spar. Therefore, to obtain

$\Sigma V = 0$, we must correct the values of w obtained from equations (3) and (4) in the following manner:

$$w_L = \frac{M_d}{h} \tag{7}$$

$$w_U = \frac{w_L}{\cos \eta} \tag{8}$$

$$w_F - w_R = w_U \sin \eta \tag{9}$$

$$w_F\, x + w_R\, (d - x) = M_h \tag{10}$$

These values of w_F, w_R, and w_U, the true values, will be proportioned so that the total moment on the section is the same as that for the first computation.

By substituting the constants of the sample spar, we obtain the following results for unit torsion per inch of span.

$$w_F = 0.0142 \text{ lb./in.}$$

$$w_R = -0.0101 \text{ lb./in.}$$

$$w_U = 0.0719 \text{ lb./in.}$$

$$w_L = -0.0717 \text{ lb./in.}$$

These results are relatively close to those obtained from the trapezoidal derivation. This is a reasonable indication, then, that the assumption of parallel spars, as far as the moment division is concerned, involves no major additional error.

Burgess' Method of Load Division.- C. P. Burgess has developed* a formula for load division between the various elements of a box spar which depends upon the basic assumption of negligible shearing work in the spars; however, by the same implicit assumption, as in Niles' method the results are in error by the lift component of load in the slanting drag spar, and must be corrected for that.

The development is as follows: Let s_x be the distance of the member x from the elastic centrum. Then the torsional rigidity of the member x, on its resistance to torsional load, is $I_x s_x$. The moment of its torsional resistance is $I_x s_x^2$. Therefore, the load w_x in the member x is expressed by the equation

$$w_x = M\frac{I_x s_x}{\Sigma I\ s^2}$$

The application of this formula, and the corrections, to the sample spar gives the following results:

$$w_F = 0.0142 \text{ lb./in.}$$

$$w_R = -0.0101 \text{ lb./in.}$$

$$w_U = 0.0719 \text{ lb./in.}$$

$$w_L = -0.0717 \text{ lb./in.}$$

The close agreement between these results and those obtained through the application of Niles' method would lead one to believe that the formulas are similar. This is true, and

*N.A.C.A. Technical Report No. 329, "The Torsional Strength of Wings," by C. P. Burgess.

the expansion of Burgess' formula into Niles' is given in the appendix. For the case in hand, that of a two spar box, either formula is equally convenient; Burgess' has the advantage, however, of being more easily applied if the structure has more than two spars.

The Membrane Analogy Method.- If we may assume that the walls of the box spar are thin with respect to their height, we have at our command a formula developed from L. Prandtl's membrane analogy.* The derivation of this formula will not be given here, but is fully explained in the reference given below. In its basic form, the equation is

$$S = \frac{Q}{2At}$$

where S = shearing stress,

Q = torque on section,

A = area enclosed by the centerlines of the sides,

t = thickness of the side being considered.

A modification of this formula will be more useful than this basic form. If we multiply both sides of the equation by t, we obtain

$$S' = \frac{Q}{2A}$$

where S' is the shear per inch of perimeter of the cross section. The value of S' need then be multiplied only by the width of the side to obtain the running load w. Applying this

*See Timoshenko and Lesells "Applied Elasticity" pp. 45 et seq.

formula, we obtain

$$S' = 0.001784 \text{ lb./in. of perimeter}$$

and

$$w_F = 0.01606 \text{ lb./in.}$$

$$w_R = -0.01249 \text{ lb./in.}$$

$$w_U = 0.0627 \text{ lb./in.}$$

$$w_L = -0.0625 \text{ lb./in.}$$

The only error which enters into this calculation lies in the variation of the front and rear spars from a thin walled section. The accuracy, referring to the least work calculation again, is excellent; the errors are -4.2% in the front and -7.2% in the rear spar, and 6.3% in the drag spars.

Burgess' Inverse Ratio Method for Load Division.- C. P. Burgess has also developed a method called the inverse ratio method for determining load division between the various parts of a redundant structure.* The basic theorem is that the portion of the imposed load carried by each of the included statically determinate structures is inversely proportional to the internal work done in the included structure when carrying the whole load alone. This theorem is true only when no part of one included structure reacts upon any part of any other included structure; when no member of the structure is common to two or more of the included statically determinate systems into which the structure is divided; and another error which may

*See Airship Design, by C. P. Burgess.

become involved in the results of this formula is generated when the applied load is not concentrated at a single point common to the determinate systems but is distributed among two or more common points. For these reasons this method is not rigorous in all cases. Applying it, we obtain

$$w_F = 0.0166 \text{ lb./in.}$$

$$w_R = -0.0132 \text{ lb./in.}$$

$$w_U = 0.0595 \text{ lb./in.}$$

$$w_L = -0.0594 \text{ lb./in.}$$

The accuracy of this method, comparing it with the results from the theorem of least work, is very good. As a rigorous method, it falls down because the various members interact under load. However, in a simpler case than the one at hand, there is reason to believe that the agreement will become absolute, and such a case, one in which the center lines of the spars form a rectangle, is analyzed in the appendix. The results obtained from inverse ratio and least work agree exactly. The reason for the agreement lies in the fact that there is no component of load from the drag spars entering into the lift spars. Since in practice the rear spar is almost always more shallow than the front, this case is apparently of academic interest alone.

The variation of the results obtained by inverse ratio, from those of the least work method, is smaller than for any other simplified method. The calculations necessitated for

this method are more tedious than those for the rigorous method and for this reason the inverse ratio method is at a disadvantage in comparison with the membrane analogy method.

Summary of Results

Method	w_F lb./in.	% error	w_R lb./in.	% error	w_U lb./in.	% error	w_L lb./in.	% error
Present design	0.0286	+70.2	-0.0286	+113.4	0.0000	-100.0	0.0000	-100.0
Least work	0.0168	0.0	-0.0134	0.0	0.0590	0.0	-0.0589	0.0
Simplified least work	0.0144	-14.3	-0.0103	-23.1	0.0712	+20.7	-0.0710	+20.5
Trapezoidal	0.0140	-16.7	-0.0098	-26.9	0.0731	+23.8	-0.0729	+23.6
Niles' method	0.0142	-15.5	-0.0101	-24.6	0.0719	+21.9	-0.0717	+21.7
Burgess' mom. of I.	0.0142	-15.5	-0.0101	-24.6	0.0719	+21.9	-0.0717	+21.7
Membrane analogy	0.0161	-4.2	-0.0125	-7.2	0.0627	+6.3	-0.0625	+6.1
Inverse ratio	0.0166	-1.2	-0.0132	-1.5	0.0595	+0.8	-0.0594	+0.8

Values in table are beam loads per inch of span for a torsional moment of unity per inch of span on the spar of Figure 2.

Discussion of Results

Present design practice, as the values of the loads in the summary show, is extremely conservative in computing the loads in the spars of a box wing, and at the same time does not provide any means of computing the considerable shearing stress in the plywood skin. Due to the action of the drag spars, a large portion of the torsional load is removed from the lift spars, and stresses of a sense opposing the stresses already present in the chord members of the box are set up. It must be realized, at this point, that the calculated stresses detailed in this paper are all obtained upon the assumption of a perfect structure,

one in which there is no give in the joints, and more particularly, one in which all the web members, including the skin, have no tendency to buckle under a shear load. In practice, the skin of the wing will not carry shear without a certain tendency to buckle, and for this reason will not maintain the theoretical transference of load from web to flange. Under these conditions, the actual stresses in the wing will differ from those obtained in the rigorous analysis, and will tend toward the present design condition. For this reason it is not possible to recommend the adoption of any logical analysis without the support of test data. A superficial consideration of the problem will suffice to show that the internal work in the spar under a torsional load will be the least when the net axial load induced by bending moment in the chord members approaches zero. This condition is that demonstrated in the method of least work.

The application of the method of least work is much too cumbersome a means of attack to use when, at the expense of a relatively slight loss of accuracy, much simpler methods are available. It is probably the simplest rigorous solution which can be applied, and for that reason has been used as a check against the approximate answers obtained.

The method of simplified least work has little advantage over the rigorous method, since the loss in accuracy is so large. It is undoubtedly true that the labor of computation

has been greatly reduced by the omission of the terms of shearing; but another approximate method is available which combines greater accuracy of results with much simpler calculations than may be obtained by any simplification of the method of least work. For this reason, while the validity of the method is recognized, it has little value.

The solution of a trapezoidal form of box involves two assumptions: first, that the shearing work done is negligible, and second, that the cross section of the wing suffers no distortion during rotation. The method of simplified least work has already demonstrated the errors attendant upon the first assumption. The second has been verified within the limits of experimental error on a few occasions; its use is, however, definitely an approximation. The results of this method demonstrate the fact that an additional error does enter into the equation when the second assumption, previously mentioned, is used. The magnitudes of the inaccuracies obtained by this formula are such as to reduce the value of the method to a very small quantity.

A. S. Niles' development for the treatment of this problem may be applied to a trapezoid only if it is assumed that the drag spars are parallel to each other. The method is essentially nothing more than a special case of the trapezoidal solution obtained when the lift spar heights are equal, and the angle η is zero. To apply it to a trapezoid is obviously

unreasonable, on that basis. However, if such an application is made, the lift spar loads must be adjusted to make ΣV and ΣM equal to zero, involving an error from the rational method of load division. Including then, as it does, approximations in addition to the ones utilized in the previous method, it seems logical to expect larger inaccuracies in the results obtained. This does not occur; the magnitude of the error is less for this method than for the trapezoidal solution. Such results may not be expected in all cases however, for the reasons stated above, and therefore this equation should be ranked below the trapezoidal one in point of accuracy; in regards to utility, it is slightly superior, since it does not involve the solution of any complicated simultaneous equations.

C. P. Burgess' method has as its main asset the ease with which it may be applied to a structure composed of more than two spars. For the analysis of a two spar wing, it lies on a par with Niles' method, since the two equations are identical. The two equations, as far as discussion and results are concerned, may be classed as one.

The membrane analogy method is by far the best approximate method available at the present time for this analysis. It is the simplest of all seven of the formulas covered, and the errors in it are small enough so that it may be used directly as a method of computation. The only reason for any error entering into the calculations is that the chord members as such do not

constitute part of "a thin walled structure;" but the inaccuracy due to this approximation is small enough to be relatively unimportant.

Burgess' inverse ratio method, in this case, gives extremely good results. The generality of such an occurrence, however, seems doubtful; and it is evident that this method involves more labor of computations than the method of least work. For this reason, and the fact that there is an approximation in the inverse ratio theory, there would be no reason for not using least work if sufficient time and labor were available for either method. At best, the inverse ratio method is inferior to the least work method in both simplicity and accuracy.

Appendix

Sample spar #1 characteristics (see Fig. 2).

Front spar:

$$I = \frac{1}{6}(9.0^3 - 5.5^3) + \frac{1}{12} \times \frac{1}{8} \times 9^3 = 93.7 + 7.6 = 101.3 \text{ in.}^4$$

Rear spar:

$$I = \frac{1}{6}(7.0^3 - 4.5^3) + \frac{1}{12} \times \frac{1}{8} \times 7^3 = 42.0 + 3.6 = 45.6 \text{ in.}^4$$

Top and bottom spars:

$$\text{Neutral axis} = \frac{35.0 \times 2.19}{3.50 + 2.19} = 13.48 \text{ in. from front spar.}$$

$$I = 3.50 \times 13.48^2 + 2.19 \times (35.0 - 13.48)^2 =$$

$$= 636 + 1014 = 1650 \text{ in.}^4$$

Position of elastic centrum:

$$x = \frac{35 \times 45.6}{45.6 + 101.3} = 10.87 \text{ in.}$$

$$(d - x) = 35.00 - 10.87 = 24.13$$

$$y = 4.5 - \frac{10.87}{35.0} = 4.19 \text{ in.}$$

$$\lambda = y = 4.19 \text{ in.}$$

$$\eta = \tan^{-1} \frac{2}{35} = \tan^{-1} 0.0572 = 3^\circ\ 17'$$

$$\sin \eta = 0.0572; \quad \cos \eta = 0.998$$

Loads in sample wing, assuming zero drag loads.

Let

$$M = \text{unity per inch of span}$$

Then

$$w_F = -w_R = \frac{\pm M}{d}$$

and

$$w_F = 0.0286 \text{ lb./in.}$$

$$w_R = -0.0286 \text{ lb./in.}$$

$$w_U = 0.0 \text{ lb./in.}$$

$$w_L = 0.0 \text{ lb./in.}$$

Loads in sample wing - the method of least work.

From equations (8) and (12), pages 11 and 12,

$$\alpha = \frac{t^2}{8F\ I^2}\left\{\frac{8K_2^5}{15} - K_1\left(K_2^4 - \frac{2}{3}K_2^2\ K_1^2 + \frac{1}{5}K_1^4\right)\right\}$$

and

$$\gamma = \frac{1}{2F\ I^2 t_1}\left\{\frac{t_2^2 K_1}{4}\left(K_2^2 - K_1^2\right)^2 + \frac{t_1 t_2 K_1^3}{3}\left(K_2^2 - K_1^2\right) + \right.$$

$$\left. + \frac{2}{15}t_1^2\ K_1^5\right\}$$

then

$$W_S = 2(\alpha + \gamma)\int_0^L w^2\ x^2 dx = \frac{2}{3}(\alpha + \gamma)\ w^2 L^3.$$

From equation on page 9,

$$W_b = \int_0^L \frac{M^2 dx}{2EI} = \frac{w^2 L^5}{40EI} \quad \left(\text{since } M = \frac{1}{2}wx^2 \text{ for cantilever}\right).$$

To determine the internal work W total,

$$W = \Sigma W_b + \Sigma W_S$$

Front spar:

$$F = 86{,}700 \text{ lb./sq.in.} = \frac{E}{15} = \frac{1.3 \times 10^6}{15} \text{ lb./sq.in.}$$

$$K_1 = 2.75 \text{ lb./sq.in.}$$

$$K_2 = 4.50 \text{ lb./sq.in.}$$

$$t_1 = 0.25 \text{ lb./sq.in.}$$

$$t_2 = 2.00 \text{ lb./sq.in.}$$

$$I = 101.3 \text{ in.}^4$$

$$\alpha = \frac{2.0}{8 \times 86{,}700 \times 101.3^2} \left\{ \frac{8 \times 4.5^5}{15} - 2.75 \left(4.5^4 - \right.\right.$$

$$\left.\left. - \frac{2}{3} \times 4.5^2 \times 2.75^2 + \frac{1}{5} \times 2.75^4\right)\right\}$$

$$\alpha = 2.81 \times 10^{-10} \left\{ 986 - 2.75 \left(411 - 102 + 10\right)\right\} =$$

$$= 2.81 \times 108 \times 10^{-8} = 3.04 \times 10^{-8}$$

$$\gamma = \frac{1}{2 \times 86{,}700 \times 101.3^2 \times 0.25} \left\{ \frac{2^2 \times 2.75}{4} \left(4.5^2 - 2.75^2\right)^2 + \right.$$

$$+ \frac{2 \times 0.25 \times 2.75^3}{3} \left(4.5^2 - 2.75^2\right) +$$

$$\left. + \frac{2}{15} \times 0.25^2 \times 2.75^5 \right\} = 2.25 \times 10^{-9} \left(2.75 \right.$$

$$\left. [20.3 - 7.6]^2 + 3.47 \, [20.3 - 7.6] + 1.3\right).$$

$$\gamma = 1.01 \times 10^{-6}$$

$$W_S = (1.101 + 0.030) \times 10^{-6} \times \frac{2}{3} w_F^2 \times 200^3 = 6.0 \, w_F^2$$

$$W_b = \frac{w_F^2 \times 200^5}{40 \times 10^6 \times 1.3 \times 101.3} = 60.8 \, w_F^2$$

Rear spar:

$F = 86{,}700$ lb./sq.in.

$K_1 = 2.25$ lb./sq.in.

$K_2 = 3.50$ lb./sq.in.

$t_1 = 0.25$ lb./sq.in.

$t_2 = 1.75$ lb./sq.in.

$I = 45.6$ in.^{4}

$$\alpha = \frac{1.75}{8 \times 86{,}700 \times 45.6^2} \left\{ \frac{8 \times 3.50^5}{15} - 2.25 \left[3.5^4 - \frac{2}{3} \times 3.5^2 \times \right.\right.$$

$$\left.\left. \times\ 2.25^2 + \frac{1}{5} \times 2.25^4\right]\right\}$$

$$\alpha = 12.13 \times 10^{-10} \left\{280 - 2.25\ [150 - 41 + 5]\right\} =$$

$$= 12.13 \times 23 \times 10^{-10} = 2.79 \times 10^{-8}$$

$$\gamma = \frac{1}{2 \times 86{,}700 \times 45.6^2 \times 0.25} \left\{ \frac{1.75^2 \times 2.25}{4} (3.5^2 - 2.25^2)^2 + \right.$$

$$+ \frac{1.75 \times 0.25 \times 2.25^3}{3} (3.5^2 - 2.25^2) +$$

$$\left. + \frac{2}{15} \times 0.25^2 \times 2.25^5 \right\} = 11.1 \times 10^{-9}$$

$$(172\ [12.3 - 5.1]^2 + 1.66\ [12.3 - 5.1] + 0.5)$$

$$\gamma = 1.120 \times 10^{-6}$$

$$W_S = (1.120 + 0.028) \times \frac{2}{3} \times w_R{}^2 \times 200^3 = 6.1\ w_R{}^2$$

$$W_b = \frac{w_R{}^2 \times 200^5}{40 \times 1.3 \times 10^6 \times 45.6} = 135.0\ w_R{}^2$$

Drag spar:

$$I = 1652 \text{ in.}^4$$

$$t_1 = 0.0625 \text{ in.}$$

$$t_2 = \frac{1}{2}(1.25 + 1.75) = 1.50 \text{ in.}$$

$$h = 36.9 \text{ in.}$$

Then if A = area of one flange,

$$I = 1652 = 2\left(\frac{36.9}{2}\right)^2 A;$$

$$A = 1652 \div 681 = 2.43 \text{ in.}$$

$$K_1 = 18.45 - \frac{2.43}{1.5} = 16.84 \text{ in.}$$

$$K_2 = 18.45 \text{ in.}$$

$$\alpha = \frac{1.50}{8 \times 86{,}700 \times 1652^2}\left\{\frac{8}{15} \times 18.45^5 - 16.84\left[18.45^4 - \frac{2}{3}18.45^2 \times 16.84^2 + \frac{1}{5} \times 16.54^4\right]\right\}$$

$$\alpha = 7.92 \times 10^{-13}\left\{1.14 \times 10^6 - 16.54\left[116000 - 64500 + 16100\right]\right\}$$

$$\alpha = 7.92 \times 10^{-13} \times 0.001 \times 10^6 = 7.92 \times 10^{-10} - \alpha$$

is negligible.

$$\gamma = \frac{1}{2 \times 86{,}700 \times 1652^2 \times 0.0625}\left[\frac{1.5^2 \times 16.84}{4}(18.45^2 - 16.84^2)^2 + \frac{1.50}{3 \times 16}(18.45^2 - 16.84^2) + \frac{2}{15} \times 0.0625^2 \times 16.84^5\right] = 3.34 \times 10^{-11}$$

$$[3080 + 8500 + 710] = 4.31 \times 10^{-7}$$

$$W_S = 4.31 \times 10^{-7} \times \frac{2}{3} \times w_L^2 \times 200^3 = 2.29\ w_L^2$$

$$W_b = \frac{w_L^2 \times 200^5}{40 \times 1.3 \times 10^6 \times 1652} = 3.72\ w_L^2$$

By inspection, from Figure 1,

(1) $w_U \cos \eta - w_L = 0$

(2) $h_2 \cos \eta\ w_U + dw_F = M = 1$

(3) $h_1 \cos \eta\ w_U + dw_R = 1$

In terms of w_U,

(4) $w_L = w_U \cos \eta = 0.998\ w_U$

(5) $w_F = \frac{1}{d}(1 - h_2 \cos \eta\ w_U) = \frac{1}{35}(1 - 7.0 \times 0.998\ w_U) =$

$= (0.0286 - 0.1996\ w_U)$

(6) $w_R = \frac{1}{d}(1 - h_1 \cos \eta\ w_U) = \frac{1}{35}(1 - 9.0 \times 0.998\ w_U) =$

$= (0.0286 - 0.257\ w_U)$

Substituting and collecting,

$$\text{Total } W_T = w_U^2 \times [2.29 + 3.72](1 + 0.998^2) + (135.0 + 6.1)(0.0286 - 0.257\ w_U)^2 + (60.8 + 6.0)(0.0286 - 0.1996\ w_U)$$

$$\frac{\partial W_T}{\partial w_U} = w_U\ [1.996 \times 2 \times 6.01 + 141.1 \times 2 \times 0.257^2 + 66.8 \times 2 \times .1996^2] - [66.8 \times 2 \times 0.1996 \times 0.0286 - 141.1 \times 2 \times 0.257 \times 0.0286] = 0$$

$47.9\ w_U - 2.88 = 0;$

$w_U = 0.0590$ lb./in.

$w_L = -0.998 \times 0.0590 = -0.0589$ lb./in.

$w_F = 0.0286 - 0.1996 \times 0.0590 = 0.0168$ lb./in.

$w_R = -0.0286 + 0.257 \times 0.0590 = -0.0134$ lb./in.

Loads in sample wing - by least work, neglecting shear.

By omitting shear terms in total work equation,

$$W_T = w_U^2 (3.72)(1.996) + 60.8 (0.0286 - 0.1996\, w_U)^2 + \\ + 135.0 (0.0286 - 0.257\, w_U)^2$$

$$\frac{\partial W_T}{\partial w_U} = w_U (2 \times 1.996 \times 3.72 + 60.8 \times 2 \times 0.1996^2 + 135.0 \times \\ \times 2 \times 0.257^2) - (2 \times 60.8 \times 0.0286 \times \\ \times 0.1996 - 2 \times 135.0 \times 0.0286 \times 0.257) = 0$$

$37.56\, w_U - 2.69 = 0;$

$w_U = 0.0712$ lb./in.

$w_R = 0.0286 - 0.257 \times 0.0712 = -0.0103$ lb./in.

$w_F = 0.0286 - 0.1996 \times 0.0712 = 0.0144$ lb./in.

$w_L = 0.998 \times 0.0712 = -0.0710$ lb./in.

Loads in sample wing - trapezoidal method.

By the principles of equilibrium, from Figure 1,

(1) $w_U \cos \eta - w_L = 0$

(2) $w_U h_2 \cos \eta + w_F d = 1$

(3) $w_U h_1 \cos \eta + w_R d = 1$

And by equating angles of deflection, from page 16, (3),

$$4 \quad \frac{1}{d}\left[\frac{w_F}{I_F} + \frac{w_R}{I_R} - \frac{w_U \sin\eta}{I_U}\right] - \frac{1}{h_1}\left[\frac{w_U \cos\eta}{I_U} + \frac{w_L}{I_L}\right] = 0$$

Substituting numerical values, collecting,

(1)→(5) $w_L = 0.998\ w_U$

(2)→(6) $w_F = (0.0286 - 0.1996\ w_U)$

(3)→(7) $w_R = (0.0286 - 0.257\ w_U)$

(4)→(8) $0.0286\ [0.00987\ w_F + 0.02190\ w_R - 0.00003\ w_U] -$

$$- 0.111\ [0.000601\ w_U + 0.000603\ w_L] = 0$$

(8)→(8') $w_F + 2.21\ w_R - 0.003\ w_U - 0.238\ w_U - 0.237\ w_L = 0$

Substitute 5, 6, and 7 in 8'

(9) $(0.0286 - 0.1996\ w_U) + 2.21\ (0.0286 - 0.257\ w_U) -$

$$- 0.241\ w_U - 0.236\ w_U = 0$$

(9') $w_U\ (-0.1996 - 0.568 - 0.241 - 0.236) = -0.0286 - 0.0632$

$1.245\ w_U = 0.0912; \quad w_U = 0.0731$ lb./in.

(10) $w_L = 0.998 \times 0.0731 = -0.0729$ lb./in.

(11) $w_F = 0.0286 - 0.0731 \times 0.1996 = 0.0140$ lb./in.

(12) $w_R = 0.0286 - 0.0731 \times 0.257 = -0.0098$ lb./in.

Load division, by Niles' method.

$$(1) \quad \frac{M_h}{M_d} = \frac{d^2}{h^2}\left\{\frac{\frac{1}{I_U} + \frac{1}{I_L}}{\frac{1}{I_F} + \frac{1}{I_R}}\right\}$$

$$h = 9 - 2 \times \frac{45.6}{101.3 + 45.6} = 9.0 - 0.63 = 8.37 \text{ in.}$$

(2) $$\frac{M_h}{M_d} = \frac{35^2}{8.37^2} \left\{ \frac{2 \times 0.000605}{0.00987 + 0.0219} \right\} = 0.667$$

(3) $M_h + M_d = 1.0$

(3)→(2)=(4) $M_h = \frac{0.667}{1.667} = 0.400$; $M_d = \frac{1}{1.667} = 0.600$

(5) $w_L = \frac{0.600}{8.37} = 0.0717$ lb./in.

(6) $w_U = 0.0717 \div 0.998 = 0.0719$ lb./in.

(7) $w_F - w_R = w_U \sin \eta = 0.0572 \times 0.0719 = 0.00412$

(8) $w_F x + w_R (d - x) = 0.400 = 10.87 w_F + 24.13 w_R$

(7)→(8)=(9) $10.87 w_F + 24.13 (w_F - 0.00412) = 0.400$

(10) $35 w_F = 0.400 + 0.099 = 0.499$; $w_F = 0.0142$ lb./in.

(11) $w_R = w_F - 0.00412 = 0.0142 - 0.00412 = 0.0101$ lb./in.

Load division by Burgess' moment of inertia method.

Member	I	s	Is	Is^2	w
F.S.	101.3	10.9	1102	12000	
R.S.	45.6	24.1	1100	26500	
U.S.	1652.0	4.19	6930	29050	
L.S.	1652.0	4.19	6930	29050	0.0717
				96600	

(1) $w_U = 0.0717 \div 0.998 = 0.0719$ lb./in.

(2) $w_F - w_R = 0.0572 \times 0.0719 = 0.00412$

(3) $10.9\ w_F + 24.1\ w_R = 1 - 4.19\ (0.0719 + 0.0717) = 1 -$

$- 0.600 = 0.400$

(4) $10.9\ w_F + 24.1\ (w_F - 0.00412) = 0.400$

(5) $35\ w_F = 0.400 + 0.099 = 0.499$

(6) $w_F = 0.0142$ lb./in.

(7) $w_R = 0.0142 - 0.0041 = 0.0101$ lb./in.

Proof of identity of Burgess' and Niles' Methods

(1) By Burgess $$w_x = \frac{I_x s_x}{\Sigma I s^2} M$$

(2) By Niles $$\frac{M_h}{M_d} = \frac{d^2}{h^2} \left\{ \frac{\frac{1}{I_U} + \frac{1}{I_L}}{\frac{1}{I_F} + \frac{1}{I_R}} \right\}$$

(3) By statics, $$M_h = w_F x + w_R (d - x)$$

and $$M_d = w_U (h - y) + w_L y$$

(4) from (1), $$M_h = \frac{I_F x^2 + I_R (d - x)^2}{\Sigma I s^2} \quad (\text{for } M = 1)$$

(5) from (1), $$M_d = \frac{I_U (h - y)^2 + I_L y^2}{\Sigma I s^2}$$

(6) from (4) and (5), $$\frac{M_h}{M_d} = \frac{I_F x^2 + I_R (d - x)^2}{I_U (h - y)^2 + I_L y^2}$$

(7) by definition, $$x = \frac{d I_R}{I_F + I_R}; \quad y = \frac{h I_U}{I_L + I_U}$$

(8) (7)→(6)
$$\frac{M_h}{M_d} = \frac{I_F d^2 \left[\frac{I_R}{I_F + I_R}\right]^2 + I_R d^2 \left[\frac{I_F}{I_F + I_R}\right]^2}{I_U h^2 \left[\frac{I_L}{I_L + I_U}\right]^2 + I_L h^2 \left[\frac{I_U}{I_U + I_L}\right]^2}$$

(9)
$$\frac{M_h}{M_d} = \frac{d^2}{h^2} \left\{ \frac{\frac{I_F I_R (I_F + I_R)}{(I_F + I_R)^2}}{\frac{I_U I_L (I_U + I_L)}{(I_U + I_L)^2}} \right\} = \frac{d^2}{h^2} \left\{ \frac{\frac{I_F \; I_R}{I_F + I_R}}{\frac{I_U \; I_L}{I_U + I_L}} \right\}$$

(10)
$$\frac{M_h}{M_d} = \frac{d^2}{h^2} \left\{ \frac{\frac{1}{I_U} + \frac{1}{I_L}}{\frac{1}{I_F} + \frac{1}{I_R}} \right\} = 2 \qquad \text{Q.E.D.}$$

Load division, by membrane analogy

$$S' = \frac{M}{ZA}$$

$$A = 35 \times \tfrac{1}{2}(7 + 9) = 280 \text{ sq.in.}$$

$$S' = \frac{1}{2 \times 280} = 0.001784 \text{ lb./in. of perimeter}$$

$$w_F = 0.001784 \times 9.0 = 0.01606 \text{ lb./in.}$$

$$w_R = 0.001784 \times 7.0 = 0.01249 \text{ lb./in.}$$

$$w_L = 0.001784 \times 35.0 = 0.0625 \text{ lb./in.}$$

$$w_U = w_L \div 0.998 = 0.0627 \text{ lb./in.}$$

Load division by inverse ratio.

From pp.30 et seq.,

(1) $Q_F = 66.7$

(2) $Q_R = 141.0$

(3) $Q_U = 6.01$

(4) $Q_L = 6.01$

(5) $s_F = 35 \times \frac{66.7}{141 + 66.7} = 11.24$ in.

(6) $s_R = 35 - 11.64 = 23.76$ in.

(7) $s_U = 0.50 \times 8.37 = 4.19$ in.

(8) $s_L = 0.50 \times 8.37 = 4.19$ in.

(9) $\frac{1}{q_F} = 1 + \frac{Q_F}{Q_R} + \frac{Q_F}{Q_U} + \frac{Q_F}{Q_L} = 1 + 0.47 + 11.1 + 11.1 = 23.7$

$q_F = \frac{1}{23.7} = 0.0422$

(10) $q_R = 0.0422 \times \frac{66.7}{141} = 0.0199$

(11) $q_U = 0.0422 \times \frac{66.7}{6.01} = 0.469$

(12) $q_L = 0.0422 \times \frac{66.7}{6.01} = 0.469$

Member	Q	s	q	qs	qs^2	w lb./in.
F.S.	66.7	11.24	0.0422	0.475	5.33	
R.S.	141.0	23.76	0.0199	0.474	11.28	
U.S.	6.01	4.19	0.469	1.965	8.24	
L.S.	6.01	4.19	0.469	1.965	8.24	0.0594
				$\Sigma qs^2 =$	33.09	

(13) $w_U = 0.0594 \div 0.998 = 0.0595$ lb./in.

(14) $w_F - w_R = 0.0572 \times 0.0595 = 0.0034$

(15) $11.24\ w_F + 23.76\ w_R = 1 - 4.19\ (0.0595 + 0.0594) =$

$= 1 - 0.499 = 0.501$

(16) $11.24\ w_F + 23.76\ (w_F - 0.0034) = 0.501$

$35\ w_F = 0.581;\ \ w_F = 0.0166$ lb./in.

(17) $w_R = 0.0166 - 0.0034 = 0.0132$ lb./in.

$I_F = 2 \times (4 \times 5^2 + 1/12 \times 2 \times 8) + 1/12 \times 1/8 \times 12^3 = 202.6 +$

$+ 18 = 220.6$ in.^{4}

$I_R = 101.3 + 18 = 119.3$ in.^{4}

$I_U = I_L = (4 \times 6.67^2 + 13.33^2 \times 2) + 1.33 + 0.17 + 1/32 \times 1/12 \times$

$\times 21.5^3 = 534 + 1.5 + 25.9 = 561.4$ in.

$561.4 = 2(1/12 \times 21.5^3 - 1/12 \times A^3);\ 21.5^3 - A^3 =$

$= 3368 = 9940 - A^3$

$A = 18.70$ in. $= 2$ K.

	F	R	U	L
K_1	4.00 in.	4.00 in.	9.35 in.	9.35 in.
K_2	6.00 in.	6.00 in.	10.75 in.	10.75 in.
t_1	1/4 in.	1/4 in.	1/16 in.	1/16 in.
t_2	2.25 in.	1.25 in.	2.06 in.	2.06 in.
I	220.6^4 in.	119.3^4 in.	561.4^4 in.	561.4^4 in.

$$\alpha_F = \frac{2.25}{8 \times 86700 \times 220.6^2} \left[\frac{8}{15} \times 6^5 - 4 \left(6^4 - \frac{2}{3} \times 6^2 \times 4^2 + \right.\right.$$

$$\left.\left. + 1/5 \times 4^4\right)\right] = 1.99 \times 10^{-8}$$

$$\gamma_F = \frac{4}{2 \times 86700 \times 220.6^2} \left[\frac{2.225^2 \times 4}{4} (400) + \frac{2.25 \times 64}{4 \times 3} \times\right.$$

$$\left. \times 20 + \frac{2}{15 \times 16} \times 4^5\right] = 1.080 \times 10^{-6}$$

$$\alpha_R = \frac{1.25}{2.25} \times \frac{220.6^2}{119.3^2} \times \alpha_F = 1.99 \times 0.555 \times 3.42 \times 10^{-8} =$$

$$= 3.77 \times 10^{-8}$$

$$\gamma_R = \frac{4}{2 \times 86700 \times 119.3^2} \left[\frac{1.25^2 \times 4}{4} (400) + \frac{1.25}{4 \times 3} \times\right.$$

$$\left. \times 64 \times 20 + \frac{2}{15 \times 16} \times 4^5\right] = 1.243 \times 10^{-6}$$

$$\alpha_U = \alpha_L = \frac{2.06}{8 \times 86700 \times 561.4^2} \left[\frac{8}{15} \times 10.75^5 - 9.35 \left(10.75^4 - \right.\right.$$

$$\left.\left. - 2/3 \times 10.75^2 \times 9.35^2 + 1/5 \times 9.35^4\right)\right] =$$

$$= 4.72 \times 10^{-9}$$

$$\gamma_U = \gamma_L = \frac{16}{2 \times 86700 \times 561.4^2} \left[\frac{2.06^2 \times 9.35}{4} (10.75^2 - 9.35^2)^2 + \right.$$

$$+ \frac{2.06}{48} \times 9.35^3 (10.75^2 - 9.35^2) +$$

$$+ \frac{2}{15 \times 256} \times 9.35^5 = 2.62 \times 10^{-6}$$

$$W_S = 2/3 (\alpha + \gamma) w^2 L^3 = 2/3 \times 200^3 \times (\alpha + \gamma) w^2 =$$

$$= 5,330,000 (\alpha + \gamma) w^2$$

$$W_b = \frac{w^2 L^5}{40 E I} = \frac{w^2 \times 200^5}{40 \times 1.3 \times 10^6 \times I} = \frac{w^2}{I} \times 6150$$

	I	$\alpha + \gamma$	W_S	W_b	W_T
F	220.6	1.100×10^{-6}	$5.87\ w_F^2$	$27.9\ w_F^2$	$33.8\ w_F^2$
R	119.3	1.281×10^{-6}	$6.83\ w_R^2$	$51.5\ w_R^2$	$58.3\ w_R^2$
U	561.4	2.62×10^{-6}	$13.88\ w_U^2$	$11.0\ w_U^2$	$24.9\ w_U^2$
L	561.4	2.62×10^{-6}	$13.88\ w_L^2$	$11.0\ w_L^2$	$24.9\ w_L^2$

$$w_U = w_L$$

$$w_F = w_R$$

$$20\ w_F + 10\ w_U = 1$$

$$w_U = 0.10 - 2 w_F$$

$$\Sigma W = 92.1\ w_F^2 + 49.8 (0.10 - 2\ w_F)^2$$

$$\frac{\partial W}{\partial w_F} = 184.2\ w_F - 2 \times 2 \times 49.8 (0.10 - 2\ w_F) = 0$$

$$582.6\ w_F - 19.9 = 0; \quad w_F = 0.0342$$

$$w_F = .0342 \text{ lb./in.}$$

$$w_R = .0342 \text{ lb./in.}$$

$$w_U = .0316 \text{ lb./in.}$$

$$w_L = .0316 \text{ lb./in.}$$

$$\frac{1}{q_F} = 1 + \frac{33.8}{58.3} + \frac{2 \times 33.8}{24.9} = 1 + 0.580 + 2 \times 1.357 = 4.294$$

$$q_F = 0.233$$

$$q_R = 0.580 \times 0.233 = 0.135$$

$$q_U = q_L = 1.357 \times 0.233 = 0.316$$

	Q	s	q	qs	qs^2	w
F	33.8	7.34	0.233	1.710	12.56	.0342
R	58.3	12.66	0.135	1.710	21.63	.0342
U	24.9	5.0	0.316	1.580	7.90	.0316
L	24.9	5.0	0.316	1.580	7.90	.0316
					$\Sigma qs^2 = 49.99$	

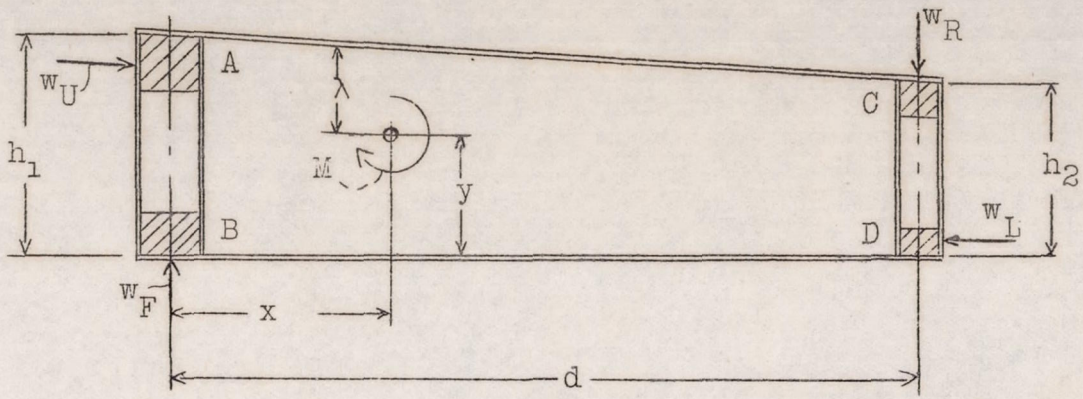

Fig.1

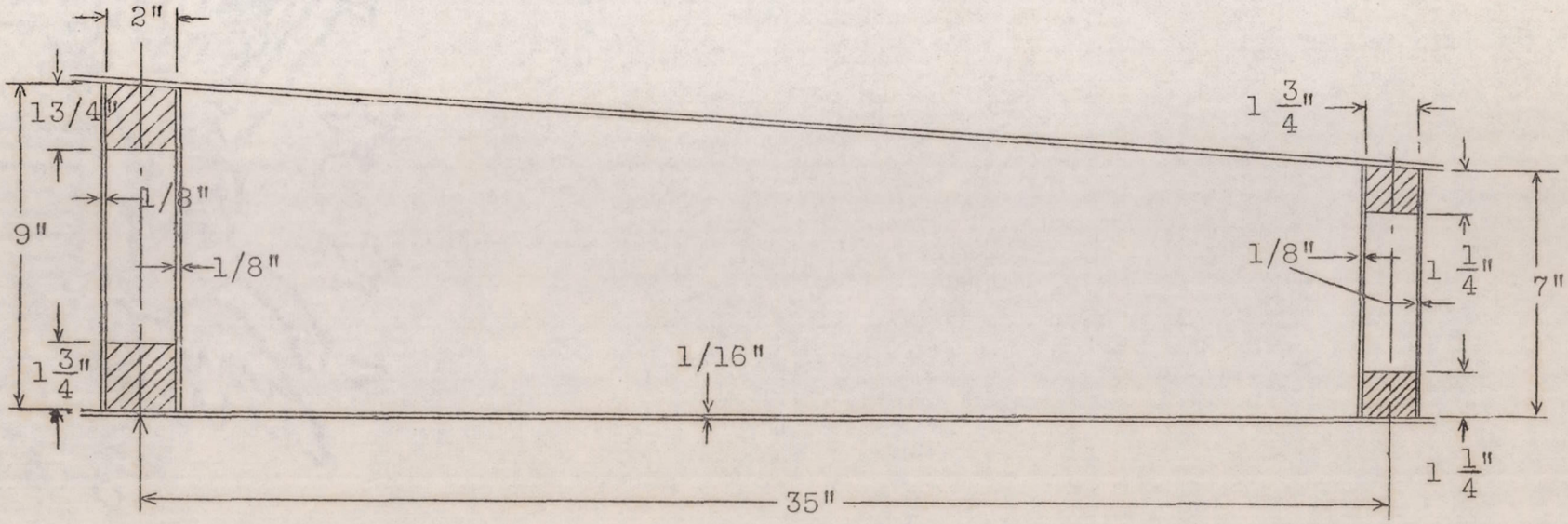

Cantilever length = 200"

Scale: 1 inch = 5 inches

Fig.2 Sample spar No.1

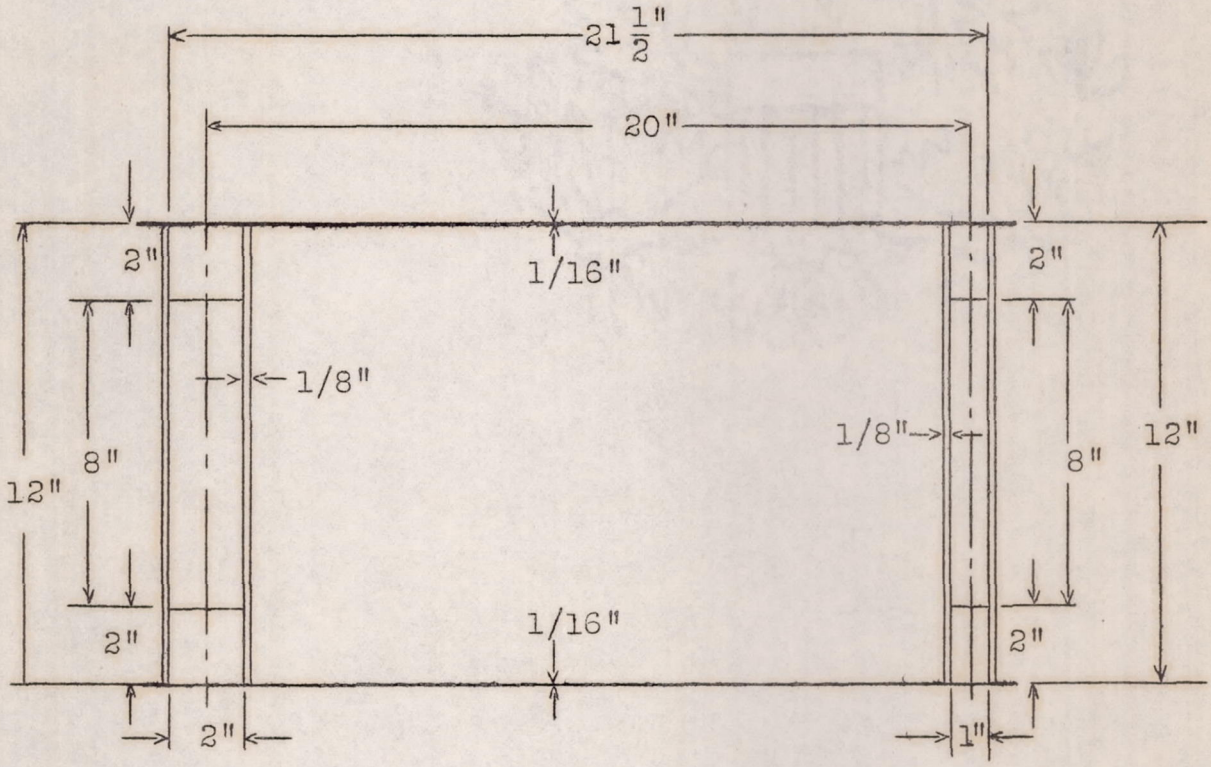

Cantilever length = 200" Scale: 1 inch = 5 inches

Fig.3 Sample spar No.2