1063

CASE FILE
COPY

NATIONAL ADVISORY COMMITTEE FOR AERONAUTICS

TECHNICAL NOTE

No. 1063

COMPARISON OF MEASURED AND CALCULATED STRESSES IN BUILT-UP BEAMS

By L. Ross Levin and David H. Nelson

Langley Memorial Aeronautical Laboratory
Langley Field, Va.

PROPERTY FAIRCHILD
ENGINEERING LIBRARY

Washington
May 1946

NATIONAL ADVISORY COMMITTEE FOR AERONAUTICS

TECHNICAL NOTE NO. 1063

COMPARISON OF MEASURED AND CALCULATED STRESSES IN BUILT-UP BEAMS

By L. Ross Levin and David H. Nelson

SUMMARY

Web stresses and flange stresses were measured in three built-up beams: one of constant-depth with flanges of constant cross section, one linearly tapered in depth with flanges of constant cross section, and one linearly tapered in depth with tapered flanges. The measured stresses were compared with the calculated stresses obtained by the methods outlined in order to determine the degree of accuracy that may be expected from the stress-analysis formulas. These comparisons indicated that the average measured stresses for all points in the central section of the beams did not exceed the average calculated stresses by more than 5 percent. It was also indicated that the difference between average measured flange stresses and average calculated flange stresses based on the net area and a fully effective web did not exceed 6.1 percent.

INTRODUCTION

In an effort to improve the accuracy and consistency of strength predictions of aircraft structures, an increasing tendency has been evident in structural engineering to supplement static tests with strain readings. The advent of the electrical strain gage has accelerated this tendency. Because the aircraft structure is quite complicated and the location of the failure in a well-designed structure cannot be easily determined, even a relatively large number of gages (several hundred) may be just sufficient to place a few gages on each spot where failure is likely to occur. The situation is further complicated because structures

built up from sheet are not so uniform nor so consistent in their behavior as, for example, beams of solid cross section. The simple formulas for beams of solid cross section consequently are not applicable to built-up structures. The successful interpretation of strain readings on airplane structures requires, therefore, basic information on the consistency of the behavior of built-up structures. This information may be obtained by multigage tests of structural elements simple enough to permit very complete coverage. The test data thus obtained may be compared with the results obtained by stress-analysis formulas, such as those presented in references 1, 2, and 3, to determine the accuracy with which these formulas may predict the stress of built-up structures.

The present paper gives basic data on the stresses obtained for built-up beams and these measured stresses are compared with those predicted by stress-analysis formulas. This information was obtained from strain measurements on three thin-web beams: one of constant-depth with flanges of constant cross section, one linearly tapered in depth with flanges of constant cross section, and one linearly tapered in depth with flanges of which the cross section varied at the same rate as the depth of the beam.

SYMBOLS

A_F cross-sectional area of flange (two angles) normal to center line of beam, square inches

A_{F_e} effective cross-sectional area of flanges normal to center line of beam (flange area plus one sixth of web area), square inches

E Young's modulus of elasticity, ksi

F vertical component of flange force in beam tapered in depth, kips

G shear modulus, ksi

I moment of inertia, inches^4

I_T moment of inertia of total effective cross section of beam about neutral axis, inches^4

I_F moment of inertia of effective cross section of flanges about neutral axis of beam, inches^4

L total length of beam, inches

M bending moment, kip-inches

N ratio of area of two flanges to area of web $(2A_F/ht)$

P load on tip of beam, kips

Q moment, about neutral axis, of area between extreme fiber and fiber a distance y from neutral axis, inches^3

S external shear force, kips

h effective depth of beam between centroids of flanges, inches

t thickness of shear web, inches

x distance from tip of beam, inches

y distance of given fiber from neutral axis of beam, inches

α taper angle, angle between center line of beam and line defined by centroid of flange

ϵ tensile or compressive strain

σ normal stress in flange at the angle α, ksi

σ_{av} average normal stress in flange at angle α, ksi

τ shear stress in web at distance y, ksi

τ_{av} average shear stress in web at any station, ksi

DISCUSSION OF THEORIES FOR BUILT-UP BEAMS

Web Stresses

The shear stresses in the web of a beam of constant depth at any distance y from the neutral axis are usually calculated by the standard formula

$$\tau = \frac{SQ}{It} \tag{1}$$

The average shear stresses in the web are usually calculated by

$$\tau_{av} = \frac{S}{ht} \tag{2}$$

Formulas (1) and (2) are not applicable to beams tapered in depth because the flanges carry some shear force that should not be neglected. In reference 1 a method of computing shear stresses in beams tapered in depth is outlined. The method is based on the equilibrium equation

$$\tau_y t\, dx = \int_y^{\frac{h+dh}{2}} \frac{M + dM}{I + dI}\, yt\, dy - \int_y^{\frac{h}{2}} \frac{M}{I}\, yt\, dy \tag{3}$$

This method is merely an extension of the "engineering" method used in deriving formula (1).

The formula for shear stress at a distance y from the neutral axis of a beam linearly tapered in depth with flanges of constant cross section can be obtained by integrating equation (3) as

$$\tau = \frac{S\left[\frac{A_F}{ht} + \frac{1}{4} - \left(\frac{y}{h}\right)^2\right]}{A_F + \frac{ht}{6}} - \frac{M \tan \alpha \left[\frac{t}{12} + \frac{2A_F^2}{h^2 t} + \frac{2}{3}\frac{A_F}{h} - \left(\frac{y}{h}\right)^2\left(\frac{4A_F}{h} + t\right)\right]}{\left(A_F + \frac{ht}{6}\right)^2} \tag{4}$$

where S and M are positive in the directions indicated on figure 1.

The formula for average shear stress in the web at any station, derived by integrating formula (4) from zero to $h/2$ and dividing by $h/2$, is

$$\tau_{av} = \frac{S}{ht} - \frac{2M \tan \alpha}{h^2 t} \frac{A_F}{A_F + \frac{ht}{6}} \tag{5}$$

This formula is frequently used to calculate shear stresses but is usually derived in a different way. The total shear force in the web at any section is usually assumed to be the total external shear at that section minus the vertical components of the flange forces at the same section, and the web is assumed capable of resisting bending. The vertical force in each flange is then

$$F = \frac{M \tan \alpha}{h} \frac{I_F}{I_T} \tag{6}$$

where I_F/I_T is the ratio of the moment of inertia of both flanges about the neutral axis of the beam to the total moment of inertia of the same section of the beam about the neutral axis. If the moment of inertia of the flanges about their own centroid is neglected, the ratio I_F/I_T reduces to $\frac{A_F}{A_F + \frac{ht}{6}}$ and formula (6) becomes

$$F = \frac{M \tan \alpha}{h} \frac{A_F}{A_F + \frac{ht}{6}} \tag{6a}$$

This equation is the form in which the expression for the vertical component of the flange force occurs in formula (5).

A formula for the shear stress at a distance y from the neutral axis of a beam linearly tapered in depth with flanges of which the cross section varied at the same rate as the depth may also be derived from equation (3). The shear stress in this type of beam is

$$\tau = \frac{S\left[N + \frac{1}{2} - 2\left(\frac{y}{h}\right)^2\right]}{ht\left(N + \frac{1}{3}\right)} - \frac{2M \tan \alpha \left[N + \frac{1}{2} - 6\left(\frac{y}{h}\right)^2\right]}{h^2 t\left(N + \frac{1}{3}\right)} \tag{7}$$

where N is the ratio of the cross-sectional area of both flanges, normal to the neutral axis of the beam, to the cross-sectional area of the web at the same section. The formula for the average shear stress τ_{av} is the same for all types of beams.

In reference 2 methods of calculating shear stresses are presented that are based on the same equilibrium equation as the methods in reference 1. The procedures, however, are slightly different and in a particular case one method may have some advantages over the other. The final result will be the same with either method.

The "engineering" methods of references 1 and 2 are applicable only to beams with small taper angles because they do not consider compatibility of displacements although they do ensure equilibrium. These methods also assume that the bending stress is proportional to the distance from the neutral axis of the beam and this assumption is not satisfactory for large taper angles.

A "classical" method of computing stresses in beams tapered in depth is presented in reference 3. The engineering methods and this classical method agree for small taper angles, and the classical method is applicable to large as well as to small taper angles. In reference 3 are presented solutions for linearly tapered beams with a rectangular cross section, for a thin web with concentrated flanges of constant cross section, and for a thin web with concentrated flanges with the cross section varied at the same rate as the depth of the beam. These solutions, however, are usually much more difficult than the engineering solutions to the problem. The solution for a thin web with concentrated flanges of constant cross section is very laborious for small taper angles.

Flange Stresses

The axial stresses in the flanges of a built-up beam of constant depth are usually calculated by the standard formula

$$\sigma = \frac{My}{I} \tag{8}$$

The average axial stresses in the flanges (the stresses at the flange centroid) are usually calculated by

$$\sigma_{av} = \frac{M}{hA_{F_e}} \tag{9}$$

The effective flange area A_{F_e} can have a maximum value equal to the gross area of the flange plus one-sixth of the web area. In some cases it may be necessary to use a smaller effective area to take into account the rivet holes in the flange and the possible ineffectiveness of the web in bending.

Formulas (8) and (9) are also used to calculate the stresses in the flanges of tapered beams; however, the stresses obtained from these formulas will not be axial stresses in the flanges. In order to obtain axial

stresses, the stresses calculated by formulas (8) and (9) should be multiplied by $\frac{1}{\cos^2\alpha}$. The formula for axial stresses at any distance y from the neutral axis is then

$$\sigma = \frac{My}{I} \frac{1}{\cos^2\alpha} \tag{10}$$

and the formula for axial stress at the centroid of the flange is

$$\sigma_{av} = \frac{M}{hA_{F_e}} \frac{1}{\cos^2\alpha} \tag{11}$$

where the area of the flange A_F is measured normal to the center line of the beam.

TESTS

Specimens

Three stiffened built-up cantilever beams of 24S-T aluminum alloy were built and tested. One was a constant-depth beam with flanges of constant cross section, one a beam linearly tapered in depth with flanges of constant cross section, and one a beam linearly tapered in depth with flanges having a cross section that varied at the same rate as the depth of the beam. The webs were stiffened with angles placed back-to-back on opposite sides of the web. For simplicity of construction the web was fastened to the outside of the legs of the flange angles rather than to the inside. Further details of the construction and the actual dimensions of the beams are shown on figure 2.

Procedure

The root of each beam was bolted into a steel fixture and the compression flange was supported against

lateral motion at the tip and at the midpoint of the span as shown in figure 3. A tip load was applied on the lower side of the beam by a hydraulic jack resting on a platform scale, which was accurate to ±0.5 percent. Strains were measured in most of the even numbered bays on the longitudinal center line of the beam, and also at distances equal to one-quarter and three-eighths of the effective depth on each side of the center line except on the tapered beam with flanges of constant cross section where measurements were taken only at the center line and at a distance equal to one-quarter of the effective depth on each side of the center line. At each point, 2-inch Tuckerman optical strain gages were mounted in pairs on each side of the web at angles of 45° and 135° with the longitudinal center line of the beam. Figure 3 shows a few gages mounted at 45° on the tapered beam with tapered flanges.

Axial strains in the flanges were measured with 2-inch Tuckerman optical strain gages mounted on the legs of the angles attached to the web and on the outstanding legs of the angles. Strains were not measured on both sides of the attached legs of the flange angles because the web covered one side.

The load was applied to each beam in three equal increments. If a straight line through the points on the load-strain plot for each gage did not pass through zero, the curve was shifted to pass through zero; however, if this shift in strain was more than 20×10^{-6}, the measurements at this point were repeated. Any measurements that did not satisfy these conditions after being repeated and thoroughly checked were not used.

Strains measured by pairs of gages on opposite sides of the sheet were averaged and the average strains for 45° and 135° were used to compute the shear stresses at 0° and 90° by

$$\tau = G\left[\epsilon(45^\circ) - \epsilon(135^\circ)\right] \qquad (12)$$

In all calculations E was assumed to be 10.6×10^3 ksi and G was assumed to be 4.0×10^3 ksi.

RESULTS AND DISCUSSION

Web Stresses

The shear stress distribution over the depth of the three beams is shown in figures 4, 5, and 6 for a tip load of 9 kips on the constant-depth beam and 6 kips on each of the tapered beams. The shear stresses at these loads were slightly less than the calculated buckling stresses. The differences between measured and calculated shear stresses are shown as percent of the calculated shear stresses in figure 7 and a summary of these differences for the central section of the beams is given in table I. The calculated shear stresses τ and τ_{av} shown on these figures were calculated by formulas (1) and (2) for the constant-depth beam, by formulas (4) and (5) for the tapered beam with constant-flange area, and by formulas (5) and (7) for the tapered beam with tapered flanges.

Central section.- From a brief study of figures 4, 5, and 6 it is apparent that at distances greater than one-half the root depth from either end of the beams (bays 5 to 16) the measured shear stresses in the web were slightly greater on the compression side of each beam than on the tension side. On the constant-depth beam the individual measured shear stresses on the tension side of the beam were frequently less than the calculated stresses, but the measured stresses on the compression side were usually greater than the calculated stresses. On the other beams the individual measured stresses were almost always greater than the calculated shear stresses.

Table I shows that the average measured stress for all points in the central section of any of the three beams did not exceed the average of the calculated values of τ_{av} by more than 5.5 percent and did not exceed the average of the calculated values of τ by more than 4.7 percent. The individual measured stresses varied from 5.6 percent less than τ to 23.3 percent more than τ. In the central section of all three beams, however, there were only two points where the measured stresses exceeded τ by more than 15 percent. These points were in bay 16, about one-half the root depth away from the root of the beam.

Further study of figure 7 shows that the maximum differences between the calculated τ and the calculated τ_{av} at any point on the constant-depth beam were appreciable (about 7 percent) but on the tapered beam the maximum differences between the calculated values of τ and τ_{av} were smaller (about 1.5 percent). Near the root, where the proportions of the beams were very nearly the same, the calculated shear-stress variation over the depth of the tapered beams was much less than that over the depth of the constant-depth beam. It would be possible, however, to have tapered beams of which the proportions were such that the differences between the calculated values of τ and τ_{av} would be much greater than in the present beams.

Root section.- It is obvious from a study of figures 4, 5, and 6 that for bay 18 in all beams tested, stresses calculated by the proper equations for τ or τ_{av} on the basis of the assumption that the flange force acted along the centroid were not satisfactory.

The outstanding legs of the flanges were cut off approximately 2 inches nearer the root than the center line of bay 18 and a steel plate was attached to one side of the flange angles from bay 17 to the root to reinforce this section. The bolts that attached the flanges to the root fixture were between the center line of the flange and the original location of the flange centroid. It was assumed, therefore, that the flange force acted along a line extending from the intersection of the original flange centroid with the center line of bay 18 to the center of the root attachment bolts. This assumption gave a taper angle of 4° instead of $7^{\circ}12'$ and $7^{\circ}41'$ on the tapered beams and of -4° instead of 0° on the constant-depth beam. In bay 18 the calculated shear stresses based on this assumption were more satisfactory than the calculated shear stresses based on the assumption that the flange force acted along the original centroid of the flange (figs. 4, 5, 6, and 7). The maximum measured stress in bay 18 of the tapered beams is about 1 to 2 percent greater than the shear stresses calculated on the basis of a change in the taper angle at that section, but the measured shear stresses in bay 18 of the constant-depth beam fall about half way between the two calculated curves.

Tip section.- If a column has a load applied only at one end and a shear web attached to it along one side, the maximum displacement occurs at the loaded end. The shear strain and shear stress in the web attached to it, therefore, are highest at the loaded end of the column. This condition is the one that occurred at the end uprights of the beams tested for the present investigation. Figures 4, 5, and 6 show that the shear stresses in bay 2 were highest at the loaded end of the upright. The maximum measured stress was never more than 1 percent greater than the maximum calculated stress. The distribution of shear stresses in the web near the loaded-end upright is probably one of the important factors affecting the strength of the loaded-end upright.

Flange Stresses

The distribution of measured and calculated axial flange stresses for the three beams tested are shown on figures 8, 9, and 10. Stresses were calculated by formulas (8) and (9) for the constant-depth beam and by formulas (10) and (11) for the tapered beams. These stresses were calculated for a fully effective web for both the net area and the gross area. In order to obtain an average value of measured stress at each section, a straight line was drawn through the test points and the stress at the intersection of this line with the centroid of the flange was taken as the average measured stress in the flange. Table I gives the average difference between the measured and calculated stresses at the centroid and the range of variation between measured and calculated stresses in the extreme fiber for all points in the central section of each beam.

Central section.- At a few sections in the constant-depth beam the measured axial flange stresses were nearly constant over the depth of the flange, but at other sections of this beam and in the tapered beams the stresses were not constant over the depth of the flange. Figure 10 shows that the measured stresses in the tapered beam with tapered flanges averaged less than the calculated stresses for the net area and a fully effective web, but the average measured stresses in the other beams (figs. 8 and 9) appear to have been slightly greater than the calculated stresses for the net area and a fully effective web. The average difference between measured

flange stresses and calculated flange stresses did not exceed 6.1 percent when the calculations were based on the net area and a fully effective web (table I). The measured stresses in the extreme fiber varied from 8.3 percent less than the calculated extreme fiber stresses to 8.8 percent more than the calculated extreme fiber stresses.

Figures 8, 9, and 10 show also the average calculated stresses based on the gross area and a fully effective web. For all sections on the constant-depth beam and the tapered beam with flanges of constant cross section, the calculated stresses based on the gross area were about 5 percent less than those based on the net area. In the tapered beam with tapered flanges the stresses based on the gross area were from 5 to 9 percent less than those based on the net area. On the compression flange of the constant-depth beam, calculated stresses based on the assumption that the web was effective only on the tension side of the beam would have been about 10 percent greater than the calculated stresses based on the assumption that the web was fully effective; on the tension flange the difference would have been only 1 percent.

Root and tip sections.- The measured flange stresses in bays 2 and 4 of the tapered beams varied from less than one-half the calculated flange stresses to more than two times the calculated flange stresses (figs. 9 and 10). The measured stress at one point in bay 5 of the constant-depth beam was about 25 percent greater than the calculated stress. These large variations, however, are of little practical importance because the stresses at these sections were small as compared with those at other points in the beam. In bay 18 of both tapered beams the variation of measured stresses across the depth of the flange was much greater than in the central section of the beam. The measured extreme-fiber stresses were from 15 to 30 percent greater than the calculated stresses. It is very difficult to calculate flange stresses near the root of any beam because these stresses depend to a large extent upon the details of the connections.

CONCLUSIONS

Three thin-web built-up beams, one of constant depth with flanges of constant cross section, one with slight linear taper in depth with flanges of constant cross section, and one with slight linear taper in depth with flanges of which the cross section varied at the same rate as the depth of the beam were tested at such loads that the web shear stresses were slightly less than the calculated buckling stresses. Comparisons of measured shear stresses with calculated shear stresses indicated that the average measured shear stresses for all points in the central section of the beam did not exceed the average calculated shear stresses by more than about 5 percent. The individual measured shear stresses varied from about 6 percent less than the calculated shear stresses to about 23 percent more than the calculated shear stresses, but there were only two points in all three beams where the measured stresses exceeded the calculated stresses by more than 15 percent. These points were at a station about one-half the root depth away from the root of the beam.

Comparison of measured flange stresses with calculated flange stresses based on the net area and a fully effective web showed that the difference between average measured stress and average calculated stress in the central section of any of the beams did not exceed 6.1 percent. The individual measured stresses in the extreme fiber varied from about 8 percent less than calculated to about 9 percent more than calculated.

Langley Memorial Aeronautical Laboratory
National Advisory Committee for Aeronautics
Langley Field, Va., January 21, 1946

REFERENCES

1. Pugsley, A. G., and Weatherhead, R. A.: The Shear Stresses in Tapered Beams. Jour. R.A.S., vol. XLVI, no. 381, Sept. 1942, pp. 218-226.

2. Saksena, G. B.: Shear Stress in a Tapering Beam. Aircraft Engineering, vol. XVI, no. 180, Feb. 1944, pp. 47-49.

3. Atkin, E. H.: Tapered Beams. Aircraft Engineering, vol. X, no. 117, Nov. 1938, pp. 347-351; vol. X, no. 118, Dec. 1938, pp. 371-374.

TABLE I

COMPARISON OF MEASURED WITH CALCULATED STRESSES IN THE

CENTRAL SECTION OF THE BEAMS

$$\left[\text{Percentages are obtained by the formula } \frac{\text{Measured - Calculated}}{\text{Calculated}} \times 100\right]$$

Specimen	Difference from τ_{av}		Difference from τ		Difference from σ (a)	
	Average (percent)	Variation (percent)	Average (percent)	Variation (percent)	Average at centroid (percent)	Variation at extreme fiber (percent)
Constant-depth beam	2.3	-8.7 15.8	3.6	-5.6 23.3	3.5	-8.3 7.5
Tapered beam, constant A_F	5.5	-3.8 13.9	4.7	-4.3 13.5	.4	-1.3 8.8
Tapered beam, tapered flange	4.9	1.7 21.8	4.7	-.5 19.3	-6.1	-7.9 7.2

[a]Calculated stresses based on the net area and a fully effective web.

NATIONAL ADVISORY
COMMITTEE FOR AERONAUTICS

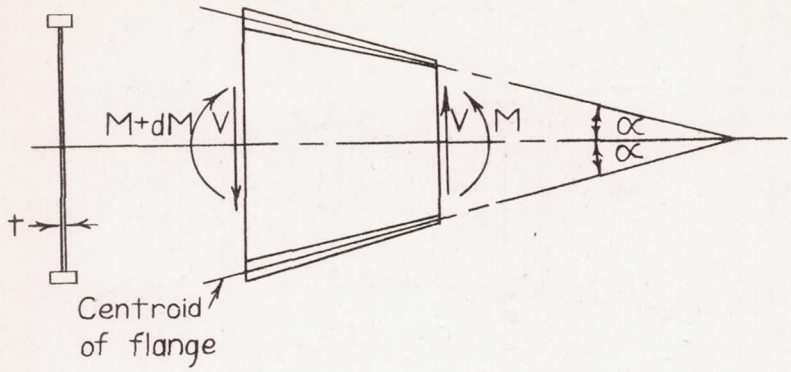

Figure 1.- Positive direction of forces and moments on tapered beams.

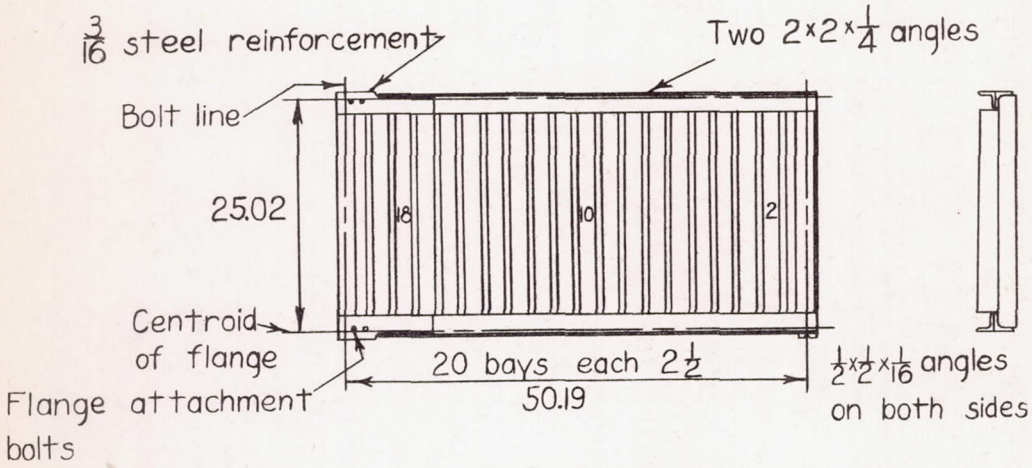

(a) Constant depth beam. Web thickness, 0.0392 .

NATIONAL ADVISORY
COMMITTEE FOR AERONAUTICS

Figure 2.- Test specimens.

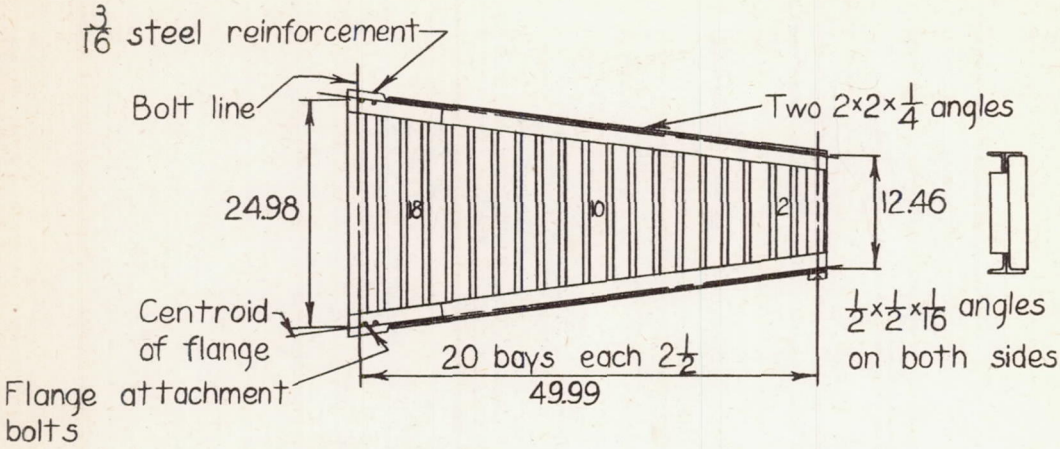

(b) Tapered beam with flanges of constant cross section. Web thickness 0.0392 .

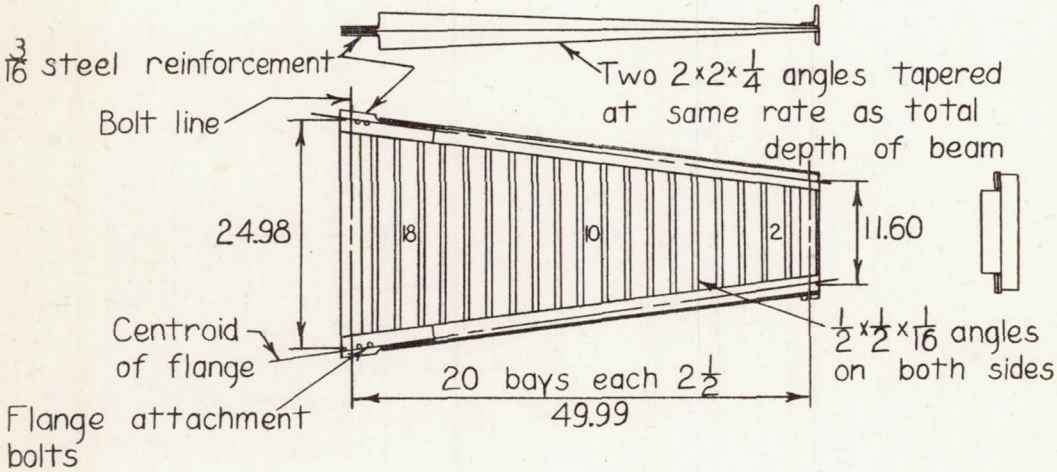

(c) Tapered beam with tapered flange. Web thickness, 0.0379 .

Figure 2.- Concluded .

NATIONAL ADVISORY COMMITTEE FOR AERONAUTICS

Figure 3.- Tapered beam with tapered flange.

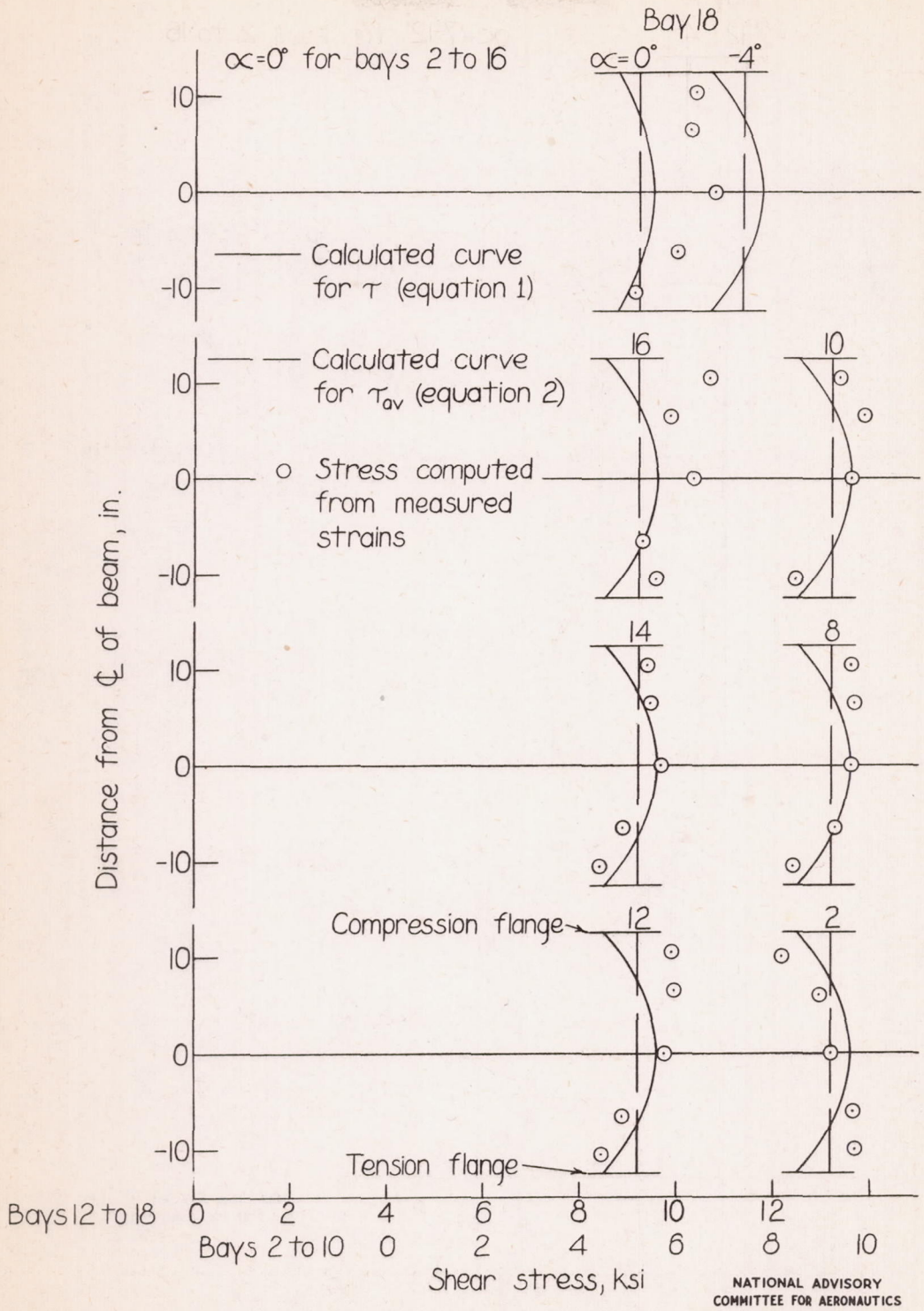

Figure 4.- Measured and calculated shear-stress distribution in the constant-depth beam. P=9 kips.

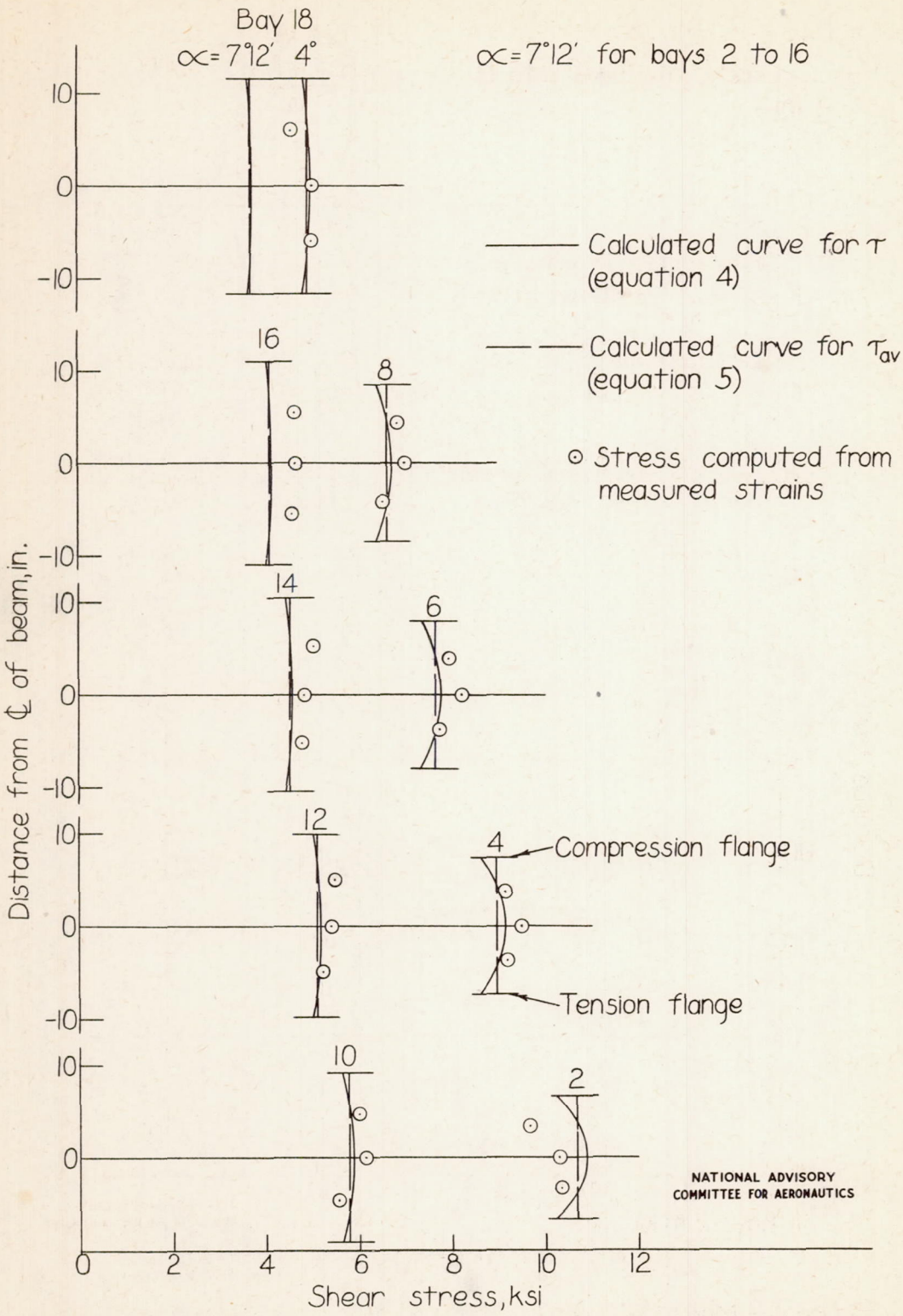

Figure 5.- Measured and calculated shear-stress distribution in the tapered beam with flanges of constant cross section. P=6 kips.

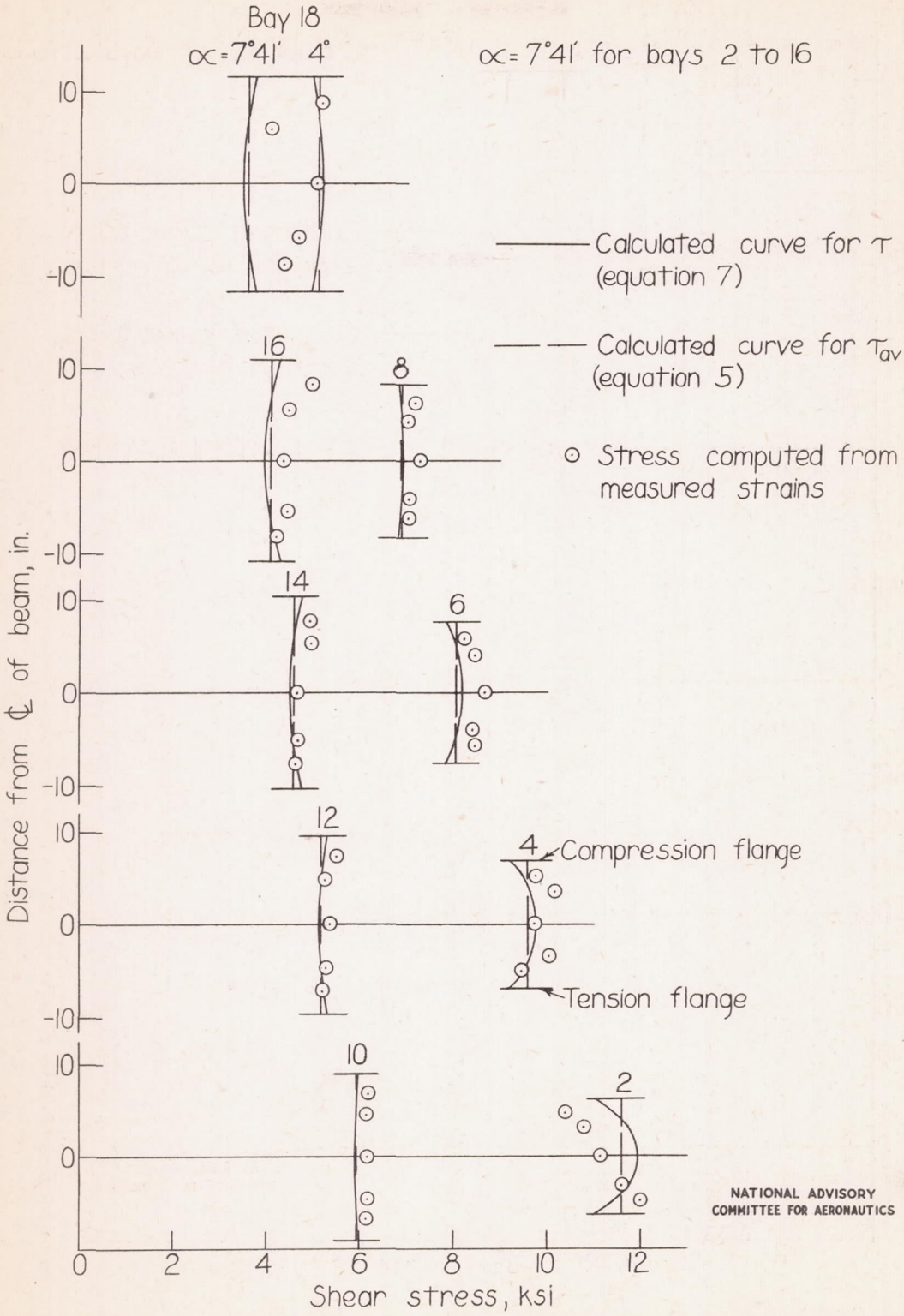

Figure 6.- Measured and calculated shear-stress distribution in the tapered beam with tapered flanges. P=6kips.

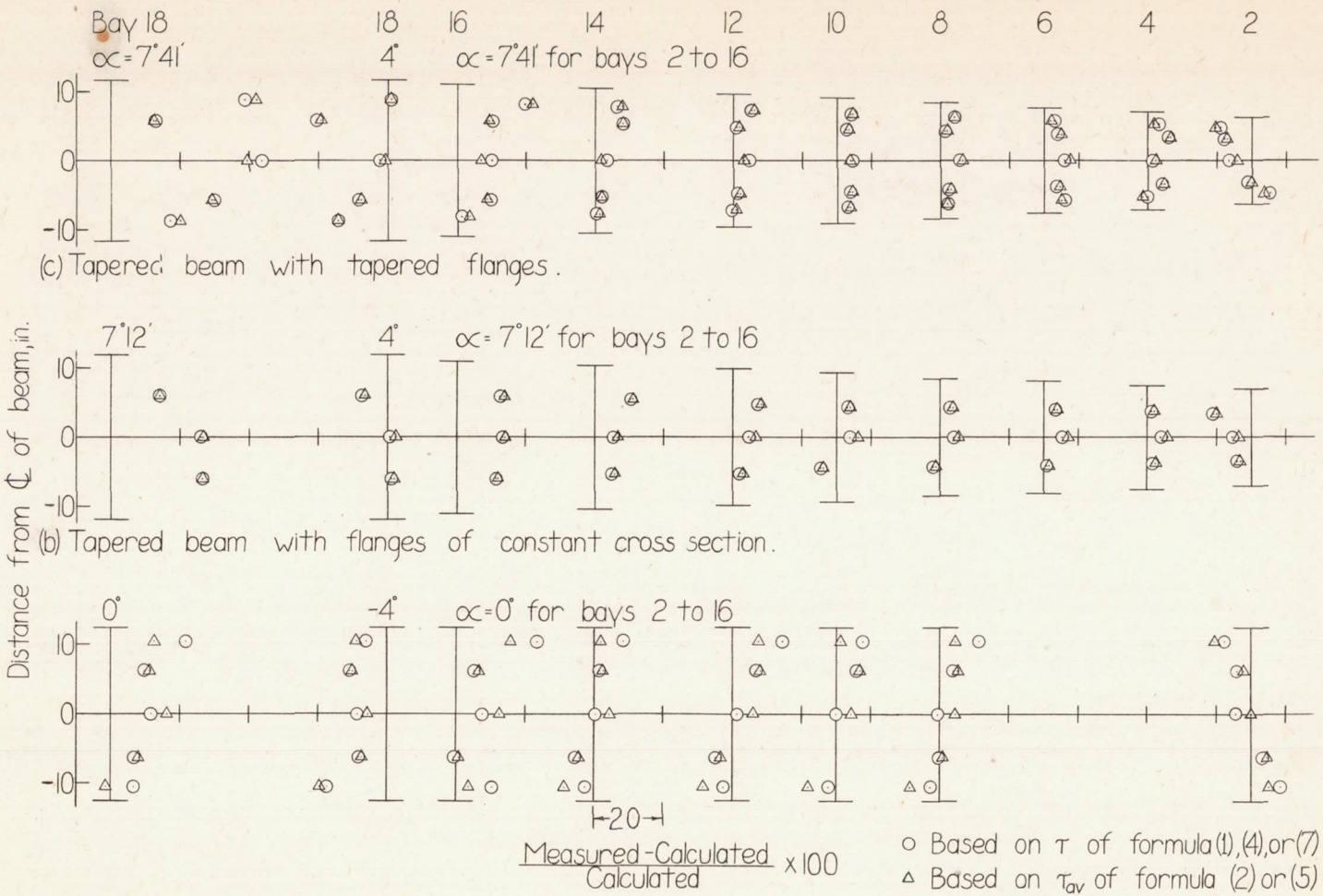

(a) Constant-depth beam.

NATIONAL ADVISORY COMMITTEE FOR AERONAUTICS

Figure 7.- Differences between measured and calculated shear stresses.

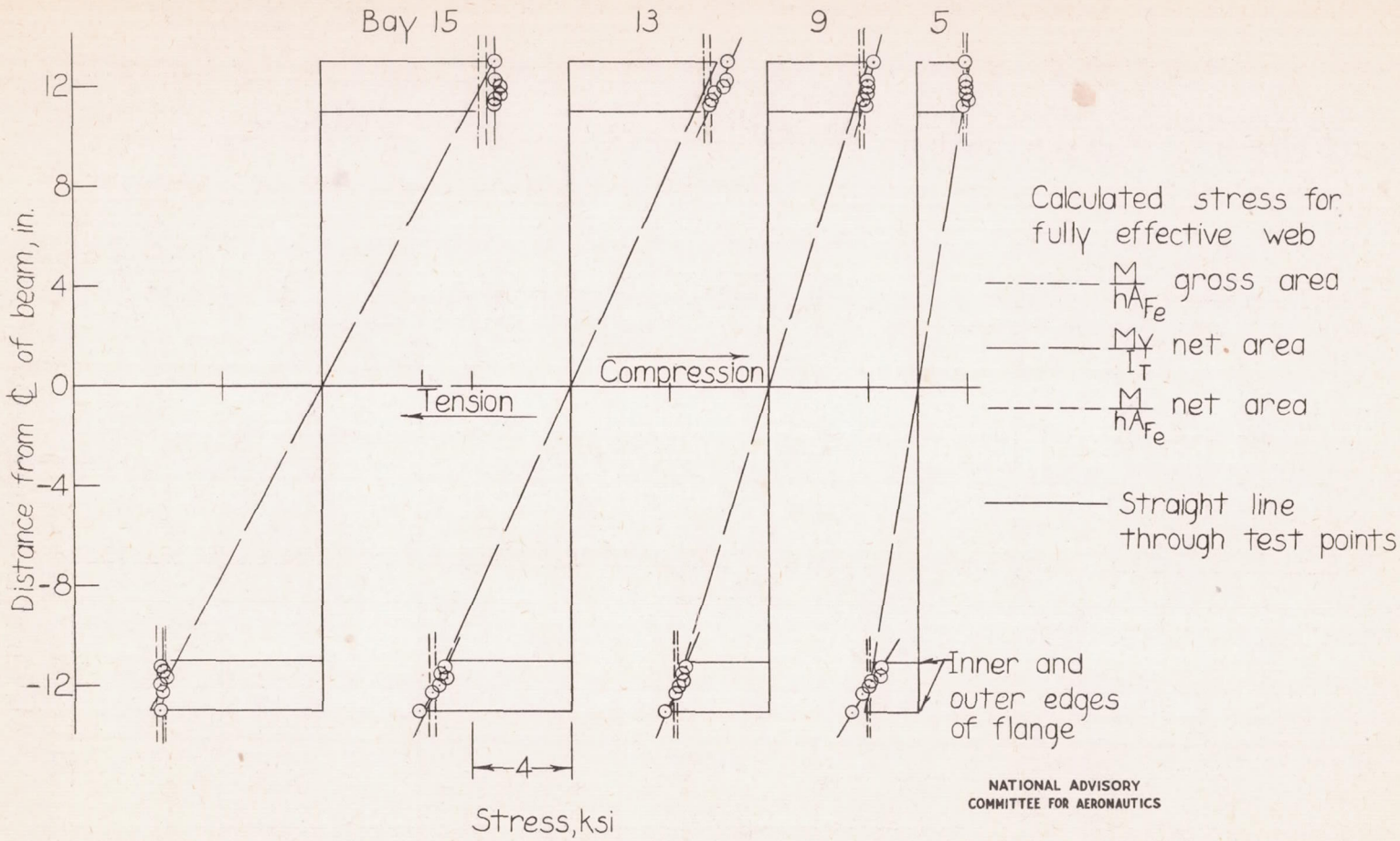

Figure 8.- Distribution of measured and calculated axial flange stress in the constant-depth beam. P=9 kips.

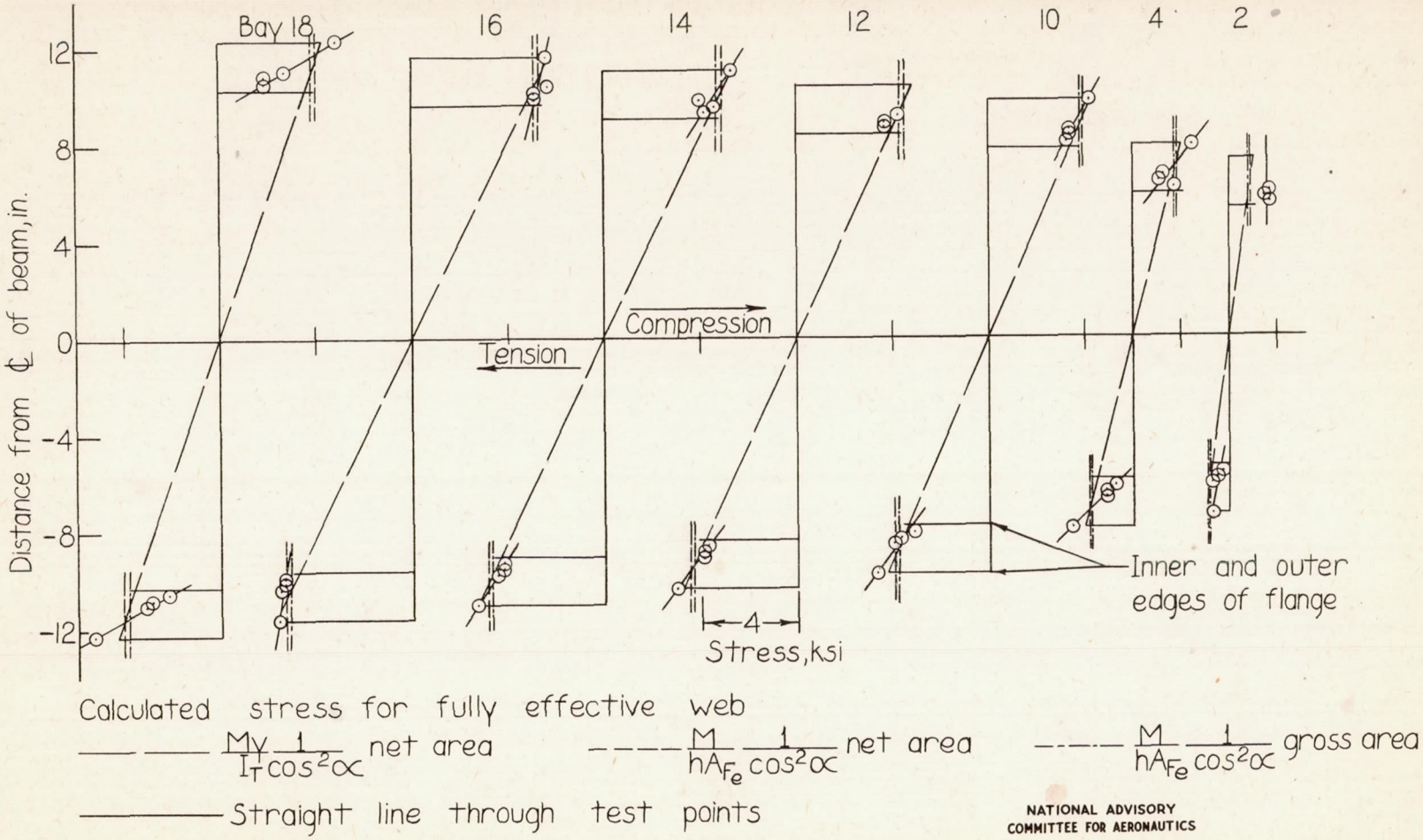

NATIONAL ADVISORY COMMITTEE FOR AERONAUTICS

Figure 9.- Distribution of measured and calculated axial flange stress in the tapered beam with flanges of constant cross section. P=6 kips.

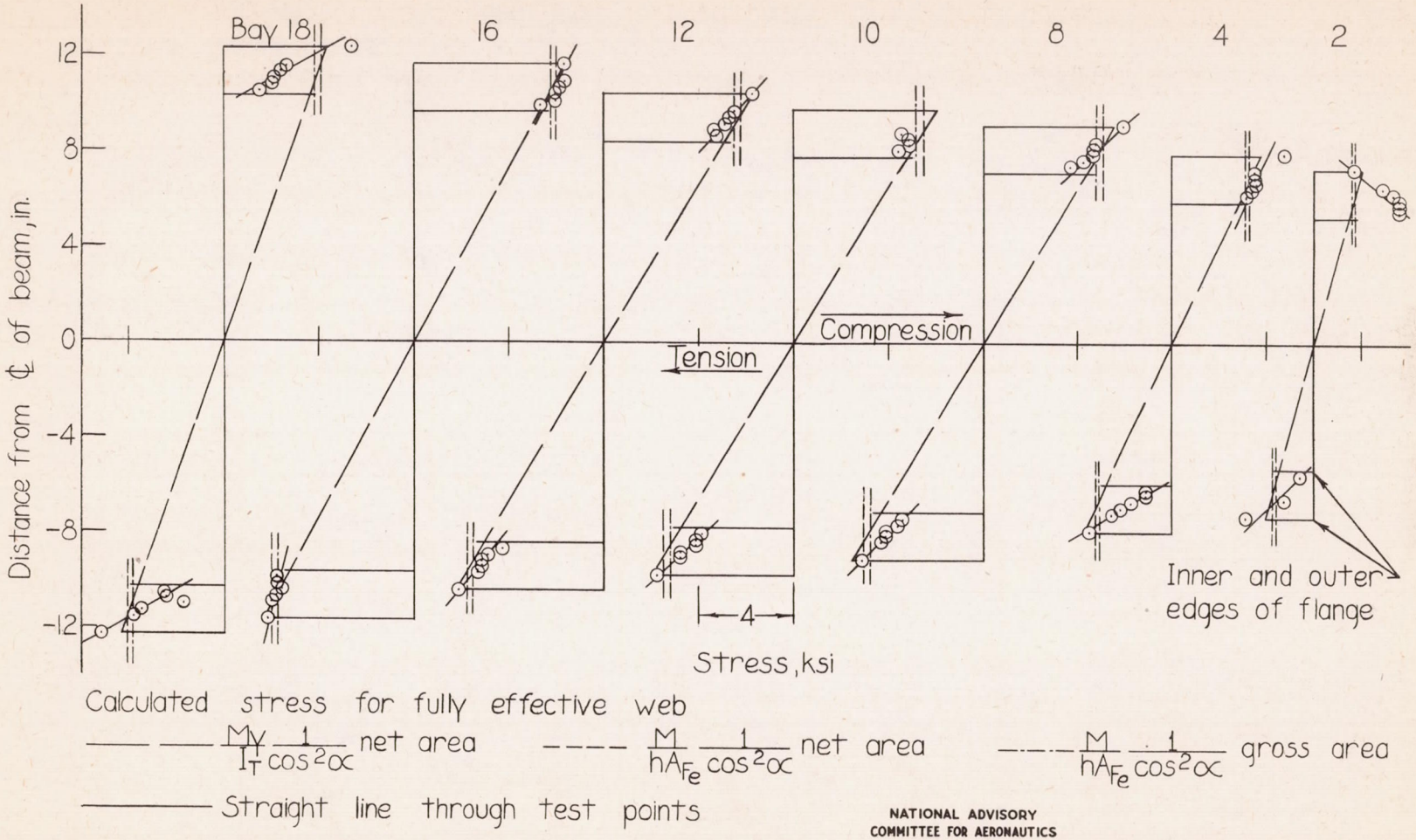

NATIONAL ADVISORY COMMITTEE FOR AERONAUTICS

Figure 10.- Distribution of measured and calculated axial flange stress in the tapered beam with tapered flanges. P=6 kips.