Y3.N21/5:6/1307

GOVT. DOC.

NATIONAL ADVISORY COMMITTEE FOR AERONAUTICS

TECHNICAL NOTE

No. 1307

EFFECT OF AERODYNAMIC REFINEMENT ON THE AERODYNAMIC CHARACTERISTICS OF A FLYING-BOAT HULL

By John M. Riebe and Rodger L. Naeseth

Langley Memorial Aeronautical Laboratory
Langley Field, Va.

Washington
June 1947

~~CONN. STATE LIBRARY~~

JUN 30 1947

BUSINESS, SCIENCE
& TECHNOLOGY DEP'T.

NATIONAL ADVISORY COMMITTEE FOR AERONAUTICS

NACA TN NO. 1307

EFFECT OF AERODYNAMIC REFINEMENT ON THE AERODYNAMIC CHARACTERISTICS OF A FLYING-BOAT HULL

By John M. Riebe and Rodger L. Naeseth

SUMMARY

An investigation was made to determine the reduction in drag that could be obtained for a conventional-type flying-boat hull by means of aerodynamic refinements. For comparisons, tests were made on a streamline body simulating the fuselage of a modern transport airplane.

The unaltered hull, of length-beam ratio 9, had a minimum drag coefficient of 0.0074 including the interference of the support wing. Fairing the step for a distance equal to nine times the depth of step at the keel or fairing out the step completely resulted in approximately the same reduction in minimum drag coefficient, about 11 percent. Rounding the chines at the bow for a distance 7 percent of the hull length resulted in approximately a 5-percent reduction in minimum drag coefficient when no other alteration was made on the model. Simultaneously fairing out the step completely and rounding the bow chines reduced the minimum drag coefficient 14 percent. Fairing the hull completely resulted in a 26-percent reduction in minimum drag coefficient, which was the probable limit without greatly altering the hull contours. The landplane fuselage had a minimum drag coefficient of 0.0040, which is about 46 percent less than that for the unaltered hull and about 27 percent less than that for the completely faired hull. The hull angle-of-attack range for minimum drag was little affected by aerodynamic refinement and generally was between angles of attack of 2° and 3°. The longitudinal stability and the directional stability for the hull with faired steps and chines were generally about the same as for the original hull.

INTRODUCTION

Because of the requirements for increased range and speed in flying boats, an investigation of the aerodynamic characteristics of flying-boat hulls as affected by hull dimensions and hull shape

is being conducted at the Langley Memorial Aeronautical Laboratory. The results of two phases of this investigation, presented in references 1 and 2, have indicated possible ways of reducing hull drag without causing large changes in aerodynamic stability and hydrodynamic performance.

The present investigation was made to determine the drag reduction that could be obtained on the conventional-type hull of a hypothetical flying boat through aerodynamic refinement and to determine the limit of such reductions without greatly altering the general hull contours. The refinements were made to a hull of length-beam ratio 9 (Langley tank model 203 of reference 1) by fairing the step for a distance equal to nine times the depth of step at the keel; fairing out the step completely; rounding the chines at the bow for a distance of about 7 percent of the hull length; and fairing out the chines, chine flares, and step completely by rounding the hull bottom. Without devices such as retractable steps and chines, the more severe alterations would probably be prohibitive because of reduced hydrodynamic performance. The use of such retracting mechanisms, however, is believed to be justified for aerodynamic refinements that show much promise. Tests were also made on the fuselage of a modern high-speed landplane, approximately equivalent in size and gross weight to the hypothetical flying boat, for the purpose of comparing the drag and stability of the hulls.

COEFFICIENTS AND SYMBOLS

The results of the tests are presented as standard NACA coefficients of forces and moments. Rolling-moment, yawing-moment, and pitching-moment coefficients are given about the locations shown in figures 1 and 2. The wing area, mean aerodynamic chord, and span of a hypothetical flying boat derived from the XPBB-1 flying boat (fig. 3) are used in determining the coefficients and Reynolds number for both the hull and fuselage tests. The data are referred to the stability axes, which are a system of axes having their origin at the center of moments shown in figures 1 and 2 in which the Z-axis is in the plane of symmetry and perpendicular to the relative wind, the X-axis is in the plane of symmetry and perpendicular to the Z-axis, and the Y-axis is perpendicular to the plane of symmetry. The positive directions of the stability axes are shown in figure 4.

The coefficients and symbols are defined as follows:

C_L lift coefficient $\left(\frac{\text{Lift}}{qS}\right)$

C_D drag coefficient $\left(\frac{\text{Drag}}{qS}\right)$

C_Y lateral-force coefficient $\left(\frac{Y}{qS}\right)$

C_l rolling-moment coefficient $\left(\frac{L}{qSb}\right)$

C_m pitching-moment coefficient $\left(\frac{M}{qS\bar{c}}\right)$

C_n yawing-moment coefficient $\left(\frac{N}{qSb}\right)$

Lift = -Z

Drag = -X when $\psi = 0$

X force along X-axis, pounds

Y force along Y-axis, pounds

Z force along Z-axis, pounds

L rolling moment, foot-pounds

M pitching moment, foot-pounds

N yawing moment, foot-pounds

q free-stream dynamic pressure, pounds per square foot $\left(\frac{\rho V^2}{2}\right)$

S wing area of $\frac{1}{10}$-scale model of hypothetical flying boat; 18.264 square feet, figure 3

$\bar{c}$ wing mean aerodynamic chord (M.A.C.) of $\frac{1}{10}$-scale model of hypothetical flying boat; 1.377 feet, figure 3

b wing span of $\frac{1}{10}$-scale model of hypothetical flying boat; 13.97 feet, figure 3

V air velocity, feet per second

ρ mass density of air, slugs per cubic foot

ψ angle of yaw, degrees

α angle of attack of hull base line or fuselage center line, degrees

R Reynolds number based on M.A.C. of $\frac{1}{10}$-scale model of hypothetical flying boat

C_{m_α} rate of change of pitching-moment coefficient with angle of attack $\left(\frac{\partial C_m}{\partial \alpha}\right)$

C_{n_ψ} rate of change of yawing-moment coefficient with angle of yaw $\left(\frac{\partial C_n}{\partial \psi}\right)$

C_{Y_ψ} rate of change of lateral-force coefficient with angle of yaw $\left(\frac{\partial C_Y}{\partial \psi}\right)$

MODEL AND APPARATUS

Langley tank model 203 was designed by the Langley Hydrodynamics Division and is the same hull that was used in the investigation of reference 1; dimensions of the model are presented in figure 1 and offsets, in table I.

The various modifications to the hull, as shown in figure 5, were made by the use of interchangeable blocks. A sketch of the step fairing which extended for a distance equal to nine times the depth of step at the keel is given in figure 6; the fairing was similar to that in reference 1. The completely faired step was constructed by extending the cross-section outline of the forebody bottom at the step of hull 203 to the sternpost with the keel following an arbitrarily faired curve from step to sternpost; offsets for the complete step fairing are presented in table II. The offsets for the hull bow, the chines of which were faired arbitrarily for a distance 7 percent of the hull length which is believed to be hydrodynamically satisfactory, are presented in table III. The completely faired hull (table IV) was constructed by making the part of the forebody below a plane half way from the hull base line to the maximum hull height identical to the part above it; the afterbody bottom was faired from the step to the sternpost by semicircles tangent to the hull

sides and coincident with the keel location of the hull with the complete step fairing.

The streamline body was a $\frac{1}{10}$-scale model of the fuselage of a typical high-speed landplane. Dimensions of the fuselage are given in figure 2 and table V.

The fuselage, hull, and interchangeable blocks were of wood and were finished with pigmented varnish. The models were attached to a support wing which was mounted horizontally in the tunnel as shown in figure 7; the support wing was not a scale model of the hypothetical wing (fig. 3). The wing location was similar for the models with regard to the amount of wing projection above the body. The wing was set at an incidence of 4° on both models and had a 20.36-inch chord and maximum thickness of 18 percent wing chord. Wing ordinates are given in table VI.

The volumes, surface areas, and maximum cross-sectional areas of the hull with the various aerodynamic refinements and of the streamline fuselage are given in table VII.

TESTS

Test Conditions

The tests were made in the Langley 300 MPH 7- by 10-foot tunnel at dynamic pressures ranging from 25 to 173 pounds per square foot, which correspond to airspeeds ranging from 102 to 275 miles per hour. Reynolds numbers, based on the wing mean aerodynamic chord of the hypothetical flying boat, ranged from 1.22×10^6 to 3.05×10^6. Corresponding Mach numbers ranged from 0.13 to 0.35.

Corrections

Blocking corrections have been applied to the data. The hull drag has been corrected for horizontal-buoyancy effects caused by a tunnel static-pressure gradient. Angles of attack have been corrected for structural deflections caused by aerodynamic forces.

Test Procedure

The aerodynamic characteristics of the hull and fuselage with the interference of the support wing were determined by

testing the wing alone and the wing and hull or wing and fuselage combination under like conditions. The hull or fuselage aerodynamic coefficients were then determined by subtraction of wing-alone coefficients from the coefficients of the complete configuration.

In order to minimize possible errors resulting from transition shift on the wing, the wing transition was fixed at the leading edge for all tests by means of roughness strips of approximately 0.008-inch-diameter carborundum particles. The particles were applied for a length of 8 percent wing chord measured along the airfoil contour from the leading edge on both upper and lower surfaces.

The hulls and fuselage were tested with transition fixed. A transition strip $\frac{1}{2}$ inch wide was located approximately 5 percent of the hull length aft of the bow. Carborundum particles of approximately 0.008-inch diameter were used for this strip also.

In order to correlate the data with previous investigations, for one of the tests the unaltered hull 203 was attached to the support wing of reference 1 which was of NACA 4321 section with a 20-inch chord.

RESULTS AND DISCUSSION

The variation of hull and fuselage aerodynamic characteristics with angle of attack is presented in figure 8; the variation of hull and fuselage aerodynamic characteristics with angle of yaw is given in figure 9. Within the range tested, Reynolds number had little or no effect on the drag and longitudinal stability for the fuselage and the various hull configurations (fig. 8). For convenience, the minimum drag coefficients $C_{D_{min}}$ for a Reynolds number of about 2.4×10^6, the percentage drag reduction resulting from the various aerodynamic refinements, and the longitudinal-stability and lateral-stability parameters for the various configurations are presented in table VIII.

The data of figure 8 indicate that for a Reynolds number of about 2.4×10^6 the unaltered hull, Langley tank model 203, had a minimum drag coefficient of 0.0074, with the interference of the present support-wing setup.

Fairing the step for a distance of nine times the depth of step at the keel, as shown in figure 5, reduced the hull minimum

drag coefficient about 11 percent. This reduction agrees with predictions based on the results of reference 1. Fairing out the step completely resulted in little or no further reduction in drag coefficient in the positive angle-of-attack range but did result in some reduction at negative angles of attack; the reduction became greater as the angles became more negative. A British investigation by Clark and Cameron of a similar configuration showed a similar result - little or no decrease in drag when the step fairing extended to the sternpost.

Rounding the chines at the bow of the hull resulted in a reduction in minimum drag coefficient of about 5 percent when no other alteration was made on the model. When the complete step fairing was added to the hull with the nose faired, the reduction in minimum drag coefficient was 14 percent, 2 percent more than for the completely faired step configuration with no nose fairing. These data indicate that the effects of refinements are somewhat dependent on the initial cleanness of the hull. Known individual drag reductions caused by fairing parts of a flying-boat hull cannot be simply added to determine the drag coefficient of a hull incorporating the various refinements; if such a procedure were followed the estimated drag might be lower than the actual value.

Completely fairing the hull bottom to the sternpost resulted in a minimum drag coefficient of 0.0055, which indicates that the maximum reduction in drag coefficient that can be obtained on a conventional-type flying-boat hull by means of aerodynamic refinement without greatly altering the hull contours is about 26 percent.

The angle-of-attack range for minimum drag was little affected by aerodynamic refinement and occurred at angles of attack between 2° and 3°, with the exception of the angle-of attack range for the completely faired hull configuration which occurred at angles of attack between 3° and 5°.

The streamline fuselage of the landplane approximately equivalent in size and gross weight to the hypothetical flying boat had a minimum drag coefficient of 0.0040 based on the same hypothetical wing area, which was about 46 percent less than the minimum drag coefficient for the unaltered hull. This value was about 27 percent less than that for the completely faired hull, which indicates the necessity of drastically changing the hull contours to obtain drag values approaching that of streamline bodies. At angles of attack greater than 6° the streamline fuselage had a drag coefficient larger than that for the completely faired hull, which probably resulted from the greater beam of the streamline body.

Tests made on the unaltered hull with the support wing of reference 1 which was 21 percent chord thick and with the support wing of the present investigation which is 18 percent chord thick are compared in figure 10. The hull minimum drag coefficient with the interference of the support wing having a thickness of 21 percent chord, 0.0066, agrees closely with other tests of the same configuration given in reference 1. The increase in hull drag coefficient for the present support-wing setup can be attributed to an increase in wing interference.

Longitudinal stability and directional stability generally varied little with aerodynamic refinement; the values of C_{m_α} and C_{n_ψ} (table VIII) were about 0.0052 and 0.0012, respectively. The completely faired hull was slightly less unstable than the unaltered hull by an amount corresponding to a center-of-gravity shift of about $\frac{1}{2}$ percent M.A.C. on a flying boat. The directional stability for the streamline fuselage was more than for the hulls; C_{n_ψ} was about 0.0004.

CONCLUSIONS

The results of tests in the Langley 300 MPH 7- by 10-foot tunnel to determine the reduction in drag that could be made on the conventional-type hull of a hypothetical flying boat by means of aerodynamic refinements, to determine the limit of such reductions without drastically altering the hull contours, and to compare the results with tests of a fuselage of a landplane approximately equivalent in size and gross weight to the hypothetical flying boat indicate the following conclusions:

1. The unaltered hull had a minimum drag coefficient of 0.0074 at a Reynolds number of about 2.4×10^6 with the interference of the present support wing. Fairing the step for a distance equal to nine times the depth of step at the keel or fairing out the step completely resulted in about the same reduction in minimum drag coefficient, about 11 percent.

2. Rounding the chines at the bow for a distance of 7 percent of the hull length resulted in a 5-percent reduction in minimum drag coefficient when no other alteration was made on the model.

3. Fairing out the step completely and rounding the bow chines reduced the minimum drag coefficient 14 percent, a reduction about 2 percent larger than the reduction for the completely faired step configuration with no bow fairing.

4. Fairing the hull completely resulted in a reduction in minimum drag coefficient of 26 percent, the probable limit of drag reduction on a conventional-type hull without greatly altering the hull contours.

5. The landplane fuselage had a minimum drag coefficient of 0.0040 which was 46 percent less than that for the unaltered flying-boat hull and about 27 percent less than that for the completely faired hull.

6. Known individual drag reductions caused by fairing parts of a flying-boat hull cannot be simply added to determine the drag coefficient of a hull incorporating several different refinements.

7. The angle-of-attack range for minimum drag was little affected by aerodynamic refinement and occurred between angles of attack of 2° and 3°, with the exception of the angle-of-attack range for the completely faired hull which occurred between 3° and 5°.

8. Longitudinal stability and directional stability for the hulls with refinements were generally about the same as for the unaltered hull.

Langley Memorial Aeronautical Laboratory
National Advisory Committee for Aeronautics
Langley Field, Va., March 7, 1947

REFERENCES

1. Yates, Campbell C., and Riebe, John M.: Effect of Length-Beam Ratio on the Aerodynamic Characterictics of Flying-Boat Hulls. NACA TN No. 1305, 1947.

2. Yates, Campbell C., and Riebe, John M.: Aerodynamic Characteristics of Three Planing-Tail Flying-Boat Hulls. NACA TN No. 1306, 1947.

TABLE I

OFFSETS FOR LANGLEY TANK MODEL 203 $\left(\frac{L}{b} = 9\right)$

[All dimensions are in inches]

Station	Distance to F.P.	Keel above base line	Chine above base line	Half beam at chine	Radius and half maximum beam	Height of hull at center line	Line of centers above base line	Angle of chine flare (deg)	Forebody bottom, heights above base line								
									Buttocks								
									$\frac{1}{2}$	1	$1\frac{1}{2}$	2	$2\frac{1}{2}$	3	$3\frac{1}{2}$	4	$4\frac{1}{2}$
F.P.	0	10.30	10.30	0	0	11.00	11.00										
$\frac{1}{2}$	2.13	5.49	8.30	2.30	2.30	14.29	11.98	10	6.48	7.49	8.14	8.32					
1	4.25	3.76	6.71	3.06	3.06	15.72	12.66	10	4.52	5.30	6.09	6.56	6.77	6.72			
2	8.50	1.83	4.59	3.86	3.86	17.36	13.50	10	2.40	2.96	3.53	4.01	4.38	4.60	4.64		
3	12.75	.80	3.24	4.32	4.32	18.41	14.08	10	1.21	1.64	2.06	2.49	2.85	3.10	3.25	3.28	
4	17.00	.27	2.36	4.61	4.61	19.12	14.52	10	.59	.92	1.25	1.58	1.89	2.14	2.33	2.42	2.38
5	21.25	.04	1.81	4.79	4.79	19.60	14.81	10	.29	.55	.80	1.04	1.30	1.52	1.70	1.82	1.85
6	25.50	0	1.51	4.89	4.89	19.88	14.99	5	.19	.40	.59	.78	.98	1.18	1.33	1.46	1.52
7	29.75	0	1.40	4.92	4.92	19.99	15.07	0	.18	.36	.55	.73	.92	1.09	1.23	1.33	1.40
8	34.00	0	1.40	4.925	4.925	20.00	15.08	0	.18	.36	.55	.73	.92	1.09	1.23	1.33	1.40
9	38.25	0	1.40	4.925	4.925	20.00	15.08	0	.18	.36	.55	.73	.92	1.09	1.23	1.33	1.40
10	42.50	0	1.40	4.925	4.925	20.00	15.08	0	.18	.36	.55	.73	.92	1.09	1.23	1.33	1.40
11	46.75	0	1.40	4.925	4.925	20.00	15.08	0	.18	.36	.55	.73	.92	1.09	1.23	1.33	1.40
12F	51.04	0	1.40	4.925	4.925	20.00	15.08	0	.18	.36	.55	.73	.92	1.09	1.23	1.33	1.40
12A	51.04	1.16	2.95	4.925	4.925	20.00	15.08										
13	55.25	1.56	3.32	4.85	4.91	20.00	15.09										
14	59.50	1.96	3.65	4.65	4.86	20.00	15.14										
15	63.75	2.36	3.94	4.35	4.77	20.00	15.23										
16	68.00	2.76	4.22	4.00	4.65	20.00	15.33										
17	72.25	3.16	4.43	3.49	4.48	20.00	15.52										
18	76.50	3.56	4.61	2.87	4.28	20.00	15.73										
19	80.75	3.97	4.72	2.06	4.03	20.00	15.97										
20	85.00	4.37	4.75	1.06	3.73	20.00	16.27										
S.P.	88.68	4.72	4.72	0													
21	89.25	5.28			3.40	20.00	16.60										
22	93.50	8.71			3.02	20.00	16.98										
23	97.75	11.43			2.61	20.00	17.39										
24	102.00	13.61			2.16	20.00	17.84										
25	106.25	15.31			1.69	20.00	18.31										
26	110.50	16.78			1.17	20.00	18.83										
27	114.75	18.25			.63	20.00	19.37										
A.P.	116.65	18.90			.39	20.00	19.61										

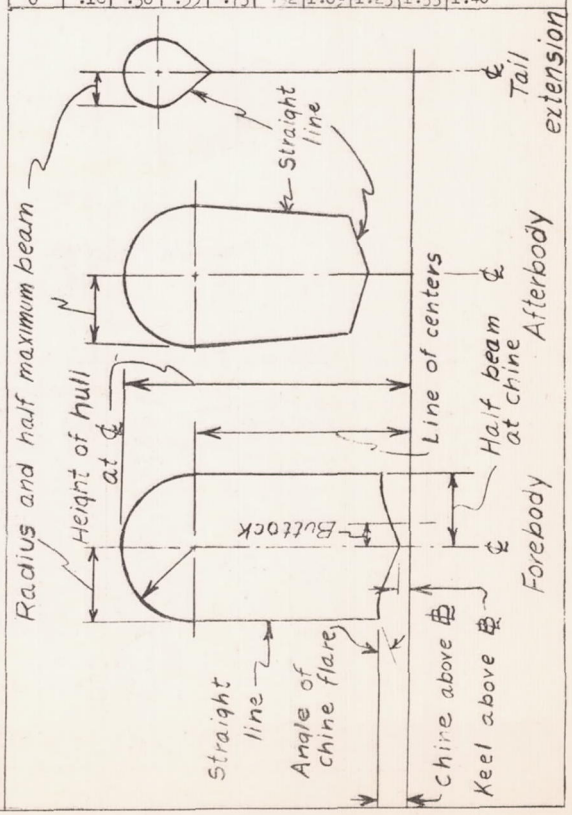

NATIONAL ADVISORY
COMMITTEE FOR AERONAUTICS

TABLE II

OFFSETS FOR LANGLEY TANK MODEL 203 WITH COMPLETE STEP FAIRING

[All dimensions are in inches]

Station	Distance to F.P.	Keel above base line	Chine above base line	Half beam at chine	Radius and half maximum beam	Height of hull at center line	Line of centers above base line	Angle of chine flare (deg)	Afterbody bottom, heights above base line								
									Buttocks								
									$\frac{1}{2}$	1	$1\frac{1}{2}$	2	$2\frac{1}{2}$	3	$3\frac{1}{2}$	4	$4\frac{1}{2}$
12A	51.04	0	1.40	4.92	4.925	20.00	15.08		0.18	0.36	0.55	0.73	0.92	1.09	1.23	1.33	1.40
13	55.25	.08	1.50	4.84	4.91	20.00	15.09		.26	.44	.63	.81	1.00	1.17	1.31	1.41	1.48
14	59.50	.27	1.65	4.62	4.86	20.00	15.14		.45	.63	.82	1.00	1.19	1.36	1.50	1.60	1.67
15	63.75	.57	1.90	4.26	4.77	20.00	15.23		.75	.93	1.12	1.30	1.49	1.66	1.80	1.90	
16	68.00	.88	2.14	3.89	4.65	20.00	15.33		1.06	1.24	1.43	1.61	1.80	1.97	2.11		
17	72.25	1.43	2.59	3.28	4.48	20.00	15.52		1.61	1.79	1.98	2.16	2.35	2.52			
18	76.50	2.08	3.02	2.64	4.28	20.00	15.73		2.26	2.44	2.63	2.81	3.00				
19	80.75	2.94	3.56	1.83	4.03	20.00	15.97		3.12	3.30	3.49						
20	85.00	3.91	4.22	.90	3.73	20.00	16.27		4.09								
S.P.	88.68	4.72	4.72	0													

NATIONAL ADVISORY
COMMITTEE FOR AERONAUTICS

TABLE III

OFFSETS FOR LANGLEY TANK MODEL 203 WITH ROUNDED BOW CHINES

[All dimensions are in inches]

Station	Distance to F.P.	Keel above base line	Chine above base line	Half beam at chine	Radius and half maximum beam	Height of hull at center line	Line of centers above base line	Angle of chine flare (deg)	Forebody bottom, heights above base line								
									Buttocks								
									$\frac{1}{2}$	1	$1\frac{1}{2}$	2	$2\frac{1}{2}$	3	$3\frac{1}{2}$	4	$4\frac{1}{2}$
F.P.	0	10.30		0	0	11.00	11.00										
$\frac{1}{4}$	1.00	6.75							6.96	7.30	7.99						
$\frac{1}{2}$	2.13	5.41			2.30	14.29	11.98		5.89	6.29	6.68	7.14					
1	4.25	3.76			3.06	15.72	12.66		4.45	5.02	5.51	5.93	6.27	6.54			
2	8.50	1.83	4.59	3.86	3.86	17.36	13.50	10	2.40	2.96	3.53	4.01	4.38	4.60	4.64		

NATIONAL ADVISORY
COMMITTEE FOR AERONAUTICS

TABLE IV

OFFSETS FOR COMPLETELY FAIRED LANGLEY TANK MODEL 203

[All dimensions are in inches]

Station	Distance to F.P.	Keel above base line	Radius and half maximum beam	Line of centers above base line	Height of hull at center line	Radius of bottom	Line of bottom centers above base line
F.P.	0		0	11.00	11.00	0	10.30
$\frac{1}{2}$	2.13		2.30	11.98	14.29	2.30	8.02
1	4.25		3.06	12.66	15.72	3.06	7.34
2	8.50		3.86	13.50	17.36	3.86	6.50
3	12.75		4.32	14.08	18.41	4.32	5.92
4	17.00		4.61	14.52	19.12	4.61	5.48
5	21.25		4.79	14.81	19.60	4.79	5.19
6	25.50		4.89	14.99	19.88	4.89	5.01
7	29.75		4.92	15.07	19.99	4.92	4.93
8	34.00		4.925	15.08	20.00	4.92	4.92
9	38.25		4.925	15.08	20.00	4.92	4.92
10	42.50		4.925	15.08	20.00	4.92	4.92
11	46.75		4.925	15.08	20.00	4.92	4.92
12	51.04		4.925	15.08	20.00	4.92	4.92
13	55.25		4.91	15.09	20.00	4.87	4.92
14	59.50		4.86	15.14	20.00	4.67	4.92
15	63.75		4.77	15.23	20.00	4.38	4.92
16	68.00		4.65	15.33	20.00	4.03	4.92
17	72.25		4.48	15.52	20.00	3.50	4.92
18	76.50		4.28	15.73	20.00	2.89	4.92
19	80.75		4.03	15.97	20.00	2.07	4.92
20	85.00		3.73	16.27	20.00	1.08	4.92
S.P.	88.68	4.72				0	4.72
21	89.25	5.28	3.40	16.60	20.00		
22	93.50	8.71	3.02	16.98	20.00		
23	97.75	11.43	2.61	17.39	20.00		
24	102.00	13.61	2.16	17.84	20.00		
25	106.25	15.31	1.69	18.31	20.00		
26	110.50	16.78	1.17	18.83	20.00		
27	114.75	18.25	.63	19.37	20.00		
A.P.	116.65	18.90	.39	19.61	20.00		

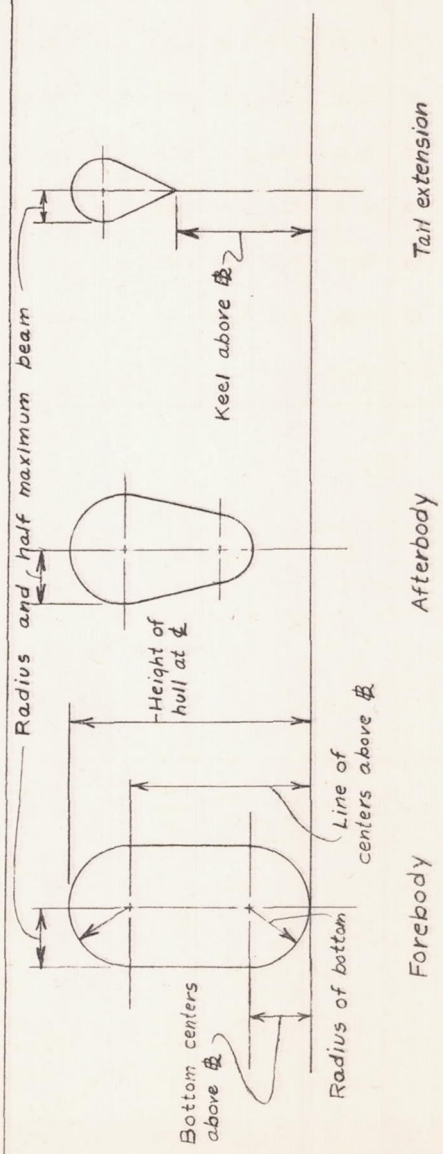

NATIONAL ADVISORY
COMMITTEE FOR AERONAUTICS

TABLE V

ORDINATES FOR LANDPLANE FUSELAGE

[All dimensions are given in inches]

Station	Radius	Station	Radius
0.158	0.408	50.989	6.440
.527	.838	54.309	6.420
1.054	1.263	58.143	6.354
2.108	1.887	62.267	6.254
3.373	2.462	66.378	6.121
5.059	3.071	69.896	5.980
7.906	3.864	72.557	5.854
8.432	3.989	76.404	5.642
10.804	4.496	79.843	5.420
14.124	5.064	84.033	5.103
17.457	5.492	87.538	4.797
20.580	5.790	91.015	4.451
23.584	6.003	94.494	4.058
26.483	6.156	97.973	3.616
29.513	6.274	101.451	3.118
33.031	6.369	104.837	2.573
36.918	6.436	108.144	1.978
40.185	6.467	111.543	1.293
43.716	6.481	114.521	.624
45.166	6.482	117.050	0
47.524	6.479		

NATIONAL ADVISORY
COMMITTEE FOR AERONAUTICS

TABLE VI

ORDINATES FOR SUPPORT WING

[All dimensions are given in percent chord]

Station	Upper surface	Lower surface
0.5	1.759	1.119
.75	2.084	1.412
1.25	2.609	1.885
2.50	3.595	2.700
5.00	4.967	3.768
7.50	5.993	4.520
10.00	6.813	5.103
15.00	8.089	5.972
20.00	9.023	6.569
25.00	9.707	6.986
30.00	10.183	7.248
35.00	10.482	7.379
40.00	10.609	7.396
45.00	10.569	7.281
50.00	10.365	7.052
55.00	9.991	6.698
60.00	9.447	6.220
65.00	8.742	5.625
70.00	7.883	4.920
75.00	6.869	4.129
80.00	5.733	3.286
85.00	4.494	2.419
90.00	3.141	1.534
95.00	1.663	.677
100.00	.017	.017

L. E. radius: 0.948
Slope of radius through end of chord: 0.25484

NATIONAL ADVISORY
COMMITTEE FOR AERONAUTICS

TABLE VII

VOLUMES, SURFACE AREAS, AND MAXIMUM CROSS-SECTIONAL AREAS OF LANGLEY TANK MODEL 203 WITH AERODYNAMIC REFINEMENTS AND OF STREAMLINE FUSELAGE

Configuration	Volume (cu in.)	Surface area (sq in.)	Maximum cross-sectional area (sq in.)
Unaltered hull	12,916	4581	182
Bow chines rounded	12,935	4581	182
Step faired nine times depth of step at keel	12,973	4604	182
Step faired completely	13,268	4681	182
Step faired completely and bow chines rounded	13,287	4681	182
Hull completely faired	13,114	4554	176
Streamline fuselage	10,270	3630	132

NATIONAL ADVISORY
COMMITTEE FOR AERONAUTICS

TABLE VIII

DRAG AND STABILITY PARAMETERS OF LANGLEY TANK MODEL 203

WITH AERODYNAMIC REFINEMENTS AND STREAMLINE FUSELAGE

[Drag coefficients are presented for $R \approx 2.40 \times 10^6$]

Configuration	$C_{D_{min}}$	Drag reduction (percent)	$\frac{\partial C_m}{\partial \alpha}$	$\frac{\partial C_n}{\partial \psi}$ for $\alpha = 2^\circ$	$\frac{\partial C_Y}{\partial \psi}$ for $\alpha = 2^\circ$
Unaltered hull	0.0074	---------	0.0052	0.0012	0.0053
Bow chines rounded	.0070	5	.0050	.0012	.0053
Step faired nine times depth of step at keel	.0066	11	.0050	.0012	.0053
Step faired completely	.0065	12	.0051	.0011	.0063
Step faired completely and bow chines rounded	.0064	14	.0050	----------	----------
Hull completely faired	.0055	26	.0045	.0012	.0045
Streamline fuselage	.0040	46	.0053	.0004	.0014

NATIONAL ADVISORY
COMMITTEE FOR AERONAUTICS

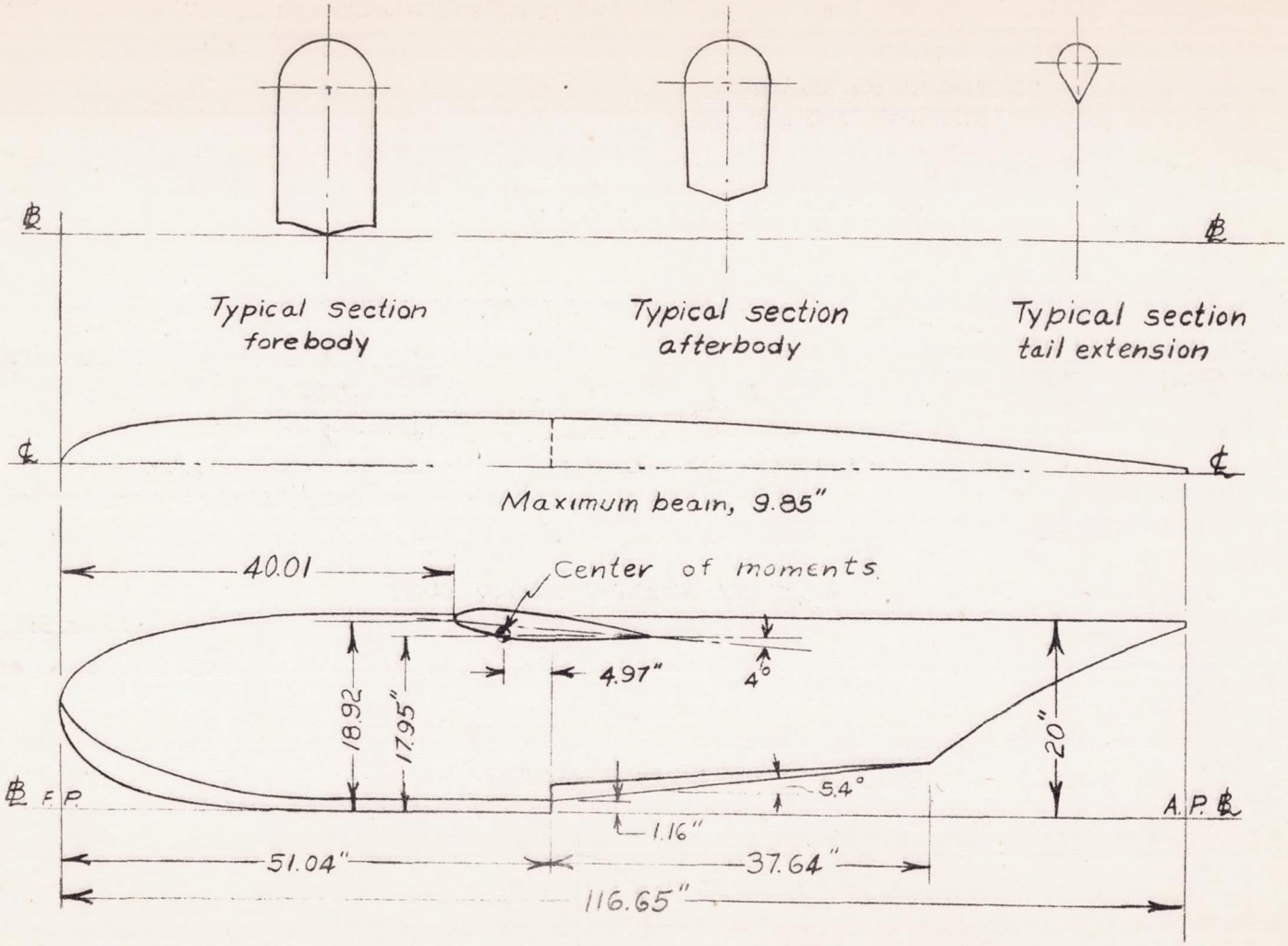

NATIONAL ADVISORY
COMMITTEE FOR AERONAUTICS

Figure 1.- Lines of Langley tank model 203.

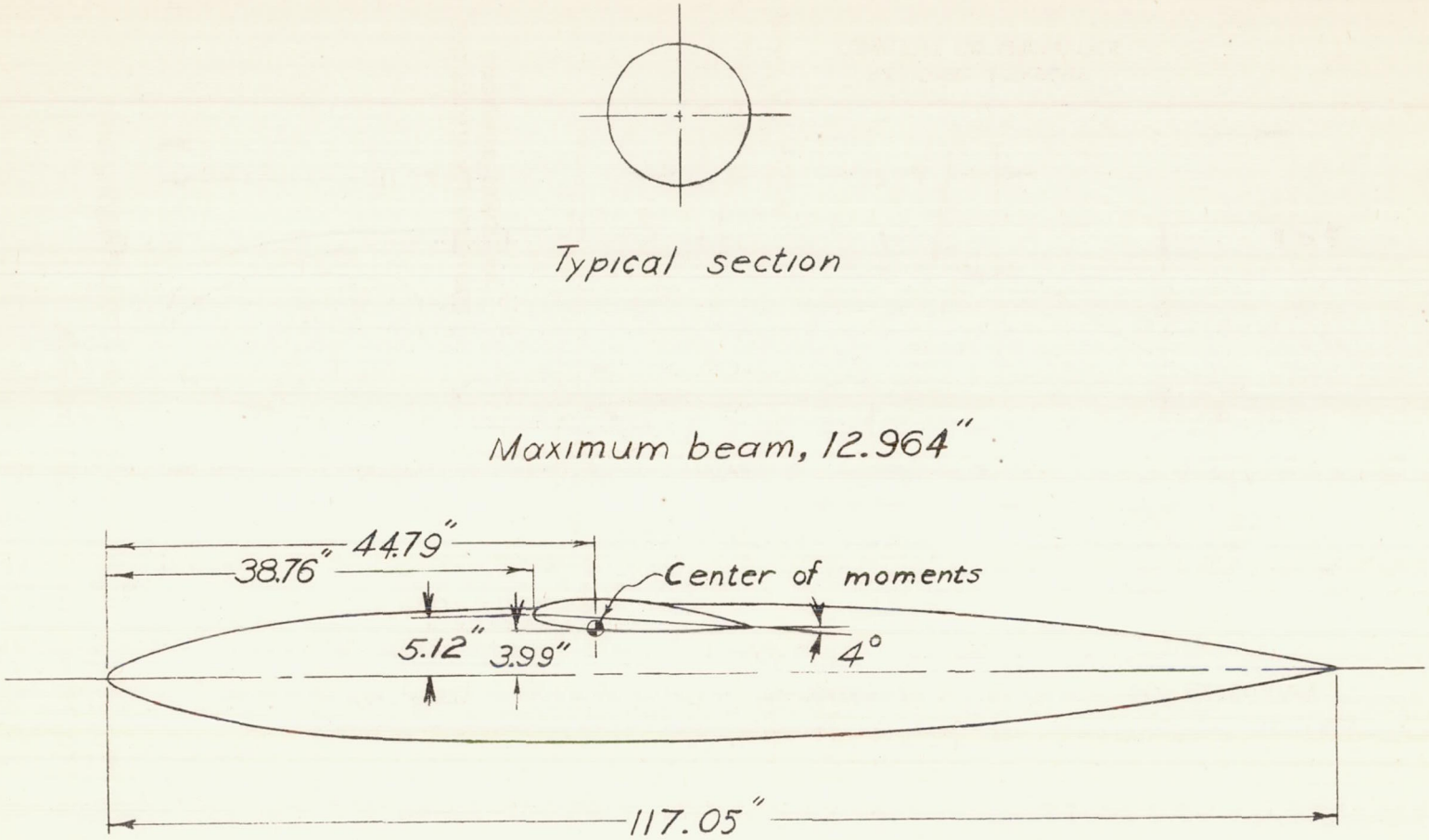

NATIONAL ADVISORY
COMMITTEE FOR AERONAUTICS

Figure 2.- Lines of the streamline fuselage.

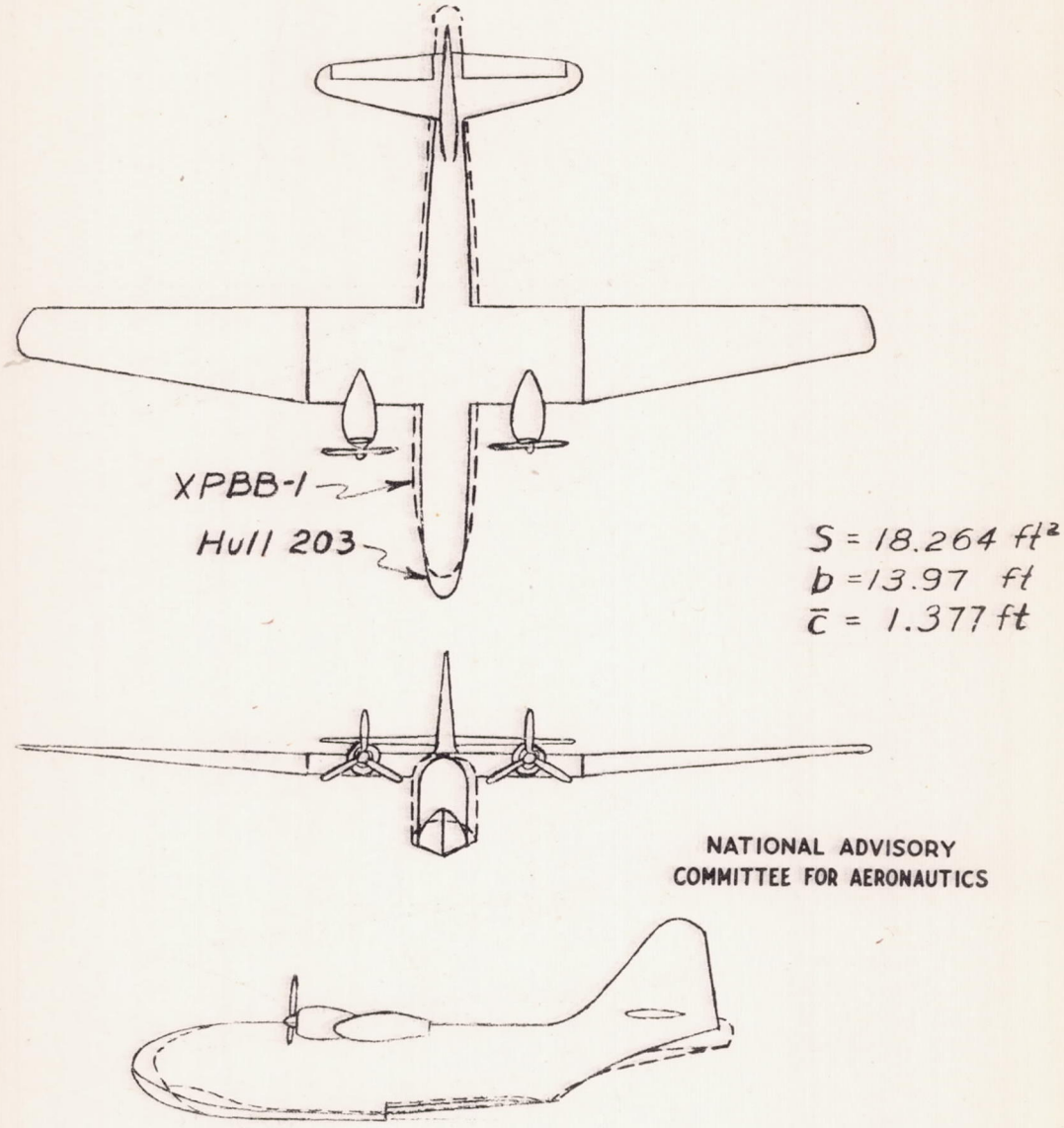

Figure 3.- Comparison of $\frac{1}{10}$-scale models of the XPBB-1 flying boat and hypothetical flying boat incorporating hull 203.

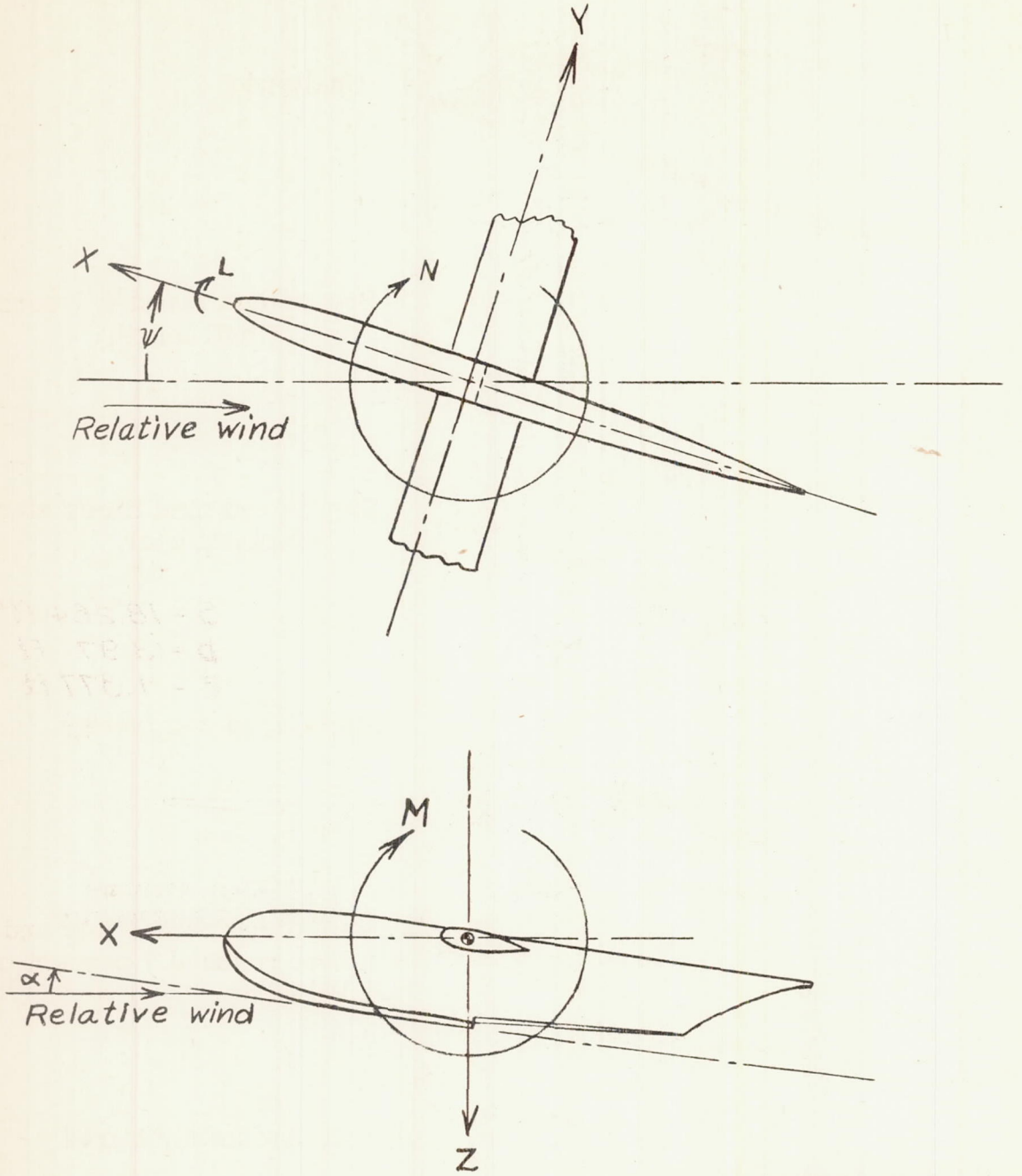

NATIONAL ADVISORY
COMMITTEE FOR AERONAUTICS

Figure 4.- System of stability axes. Positive directions of forces, moments, and angles are indicated by arrows.

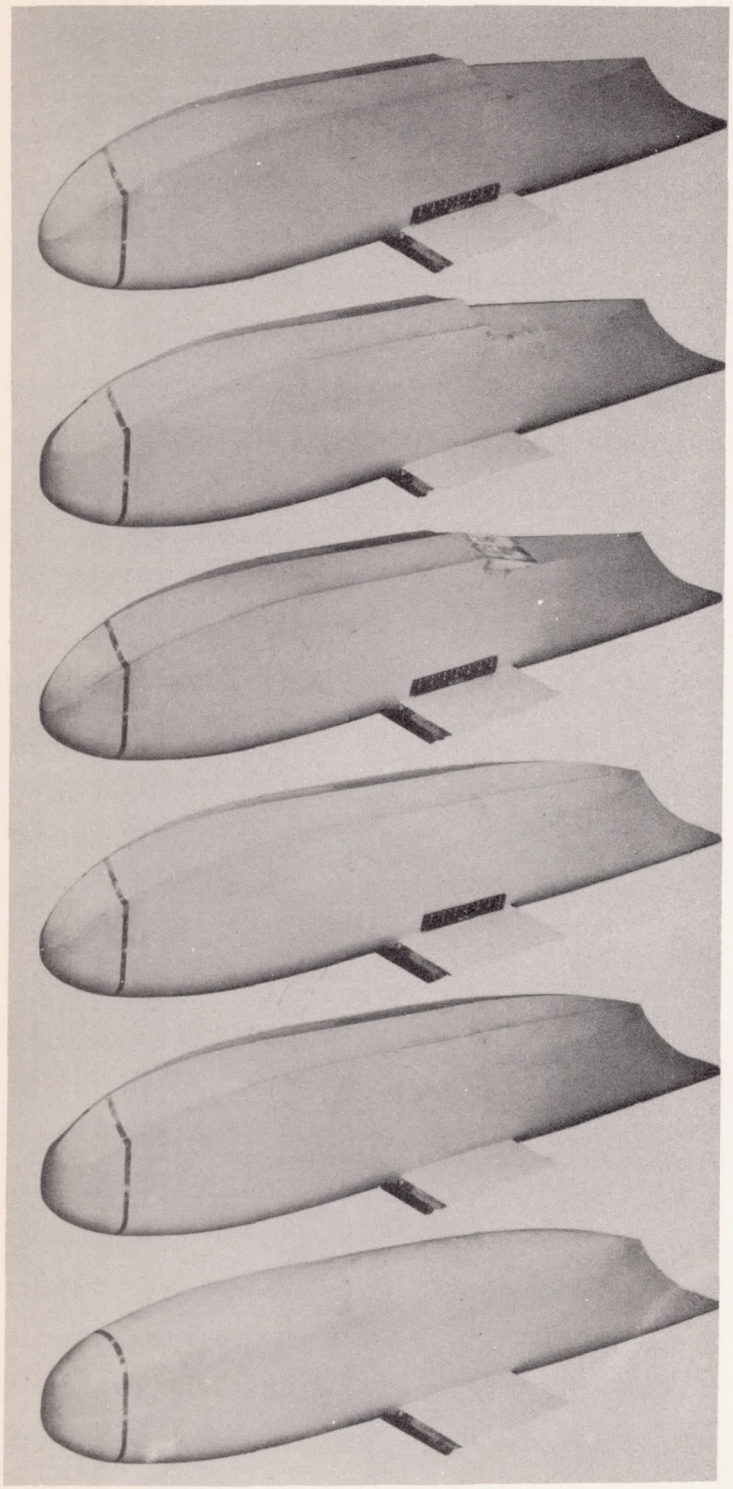

Unaltered

Bow chines rounded 7 percent of hull length

Step faired nine times step depth at keel

Step faired completely

Step faired completely and bow chines rounded 7 percent of hull length

Hull completely faired

Figure 5.- Langley tank model 203 unaltered and with aerodynamic refinements.

NATIONAL ADVISORY COMMITTEE FOR AERONAUTICS
LANGLEY MEMORIAL AERONAUTICAL LABORATORY - LANGLEY FIELD, VA.

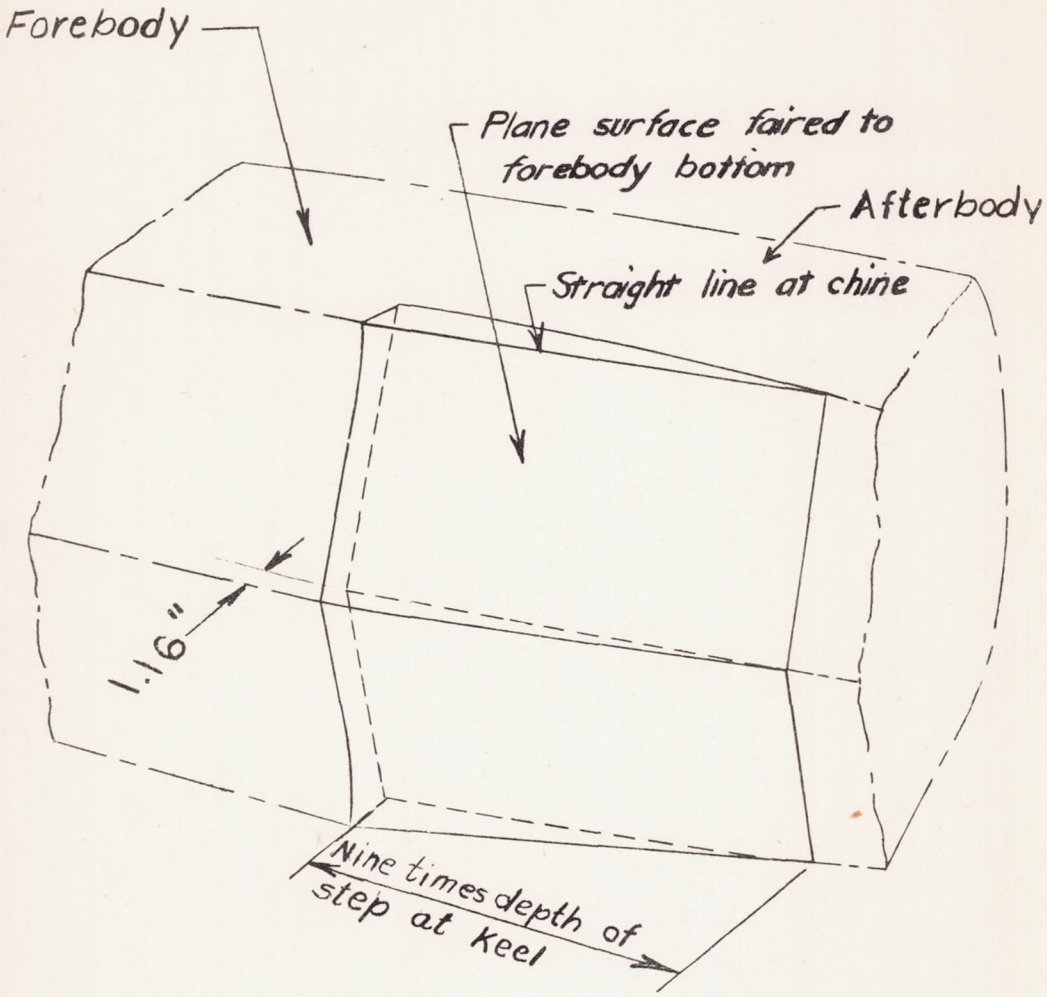

NATIONAL ADVISORY
COMMITTEE FOR AERONAUTICS

Figure 6.- General details of step faired nine times depth of step at keel. Bottom view of hull.

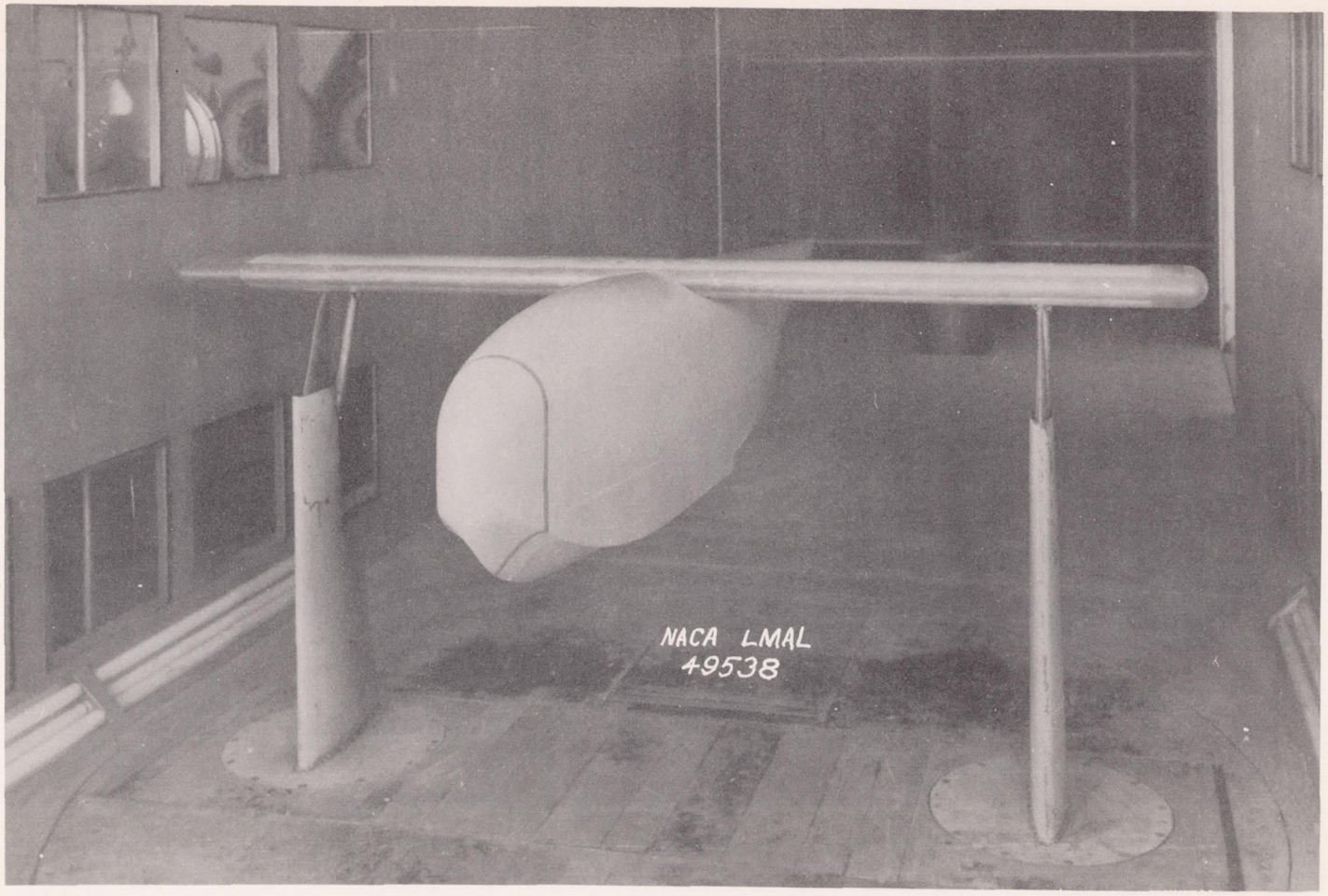

Figure 7.- Langley tank model 203 with bow chines rounded 7 percent of hull length mounted in the Langley 300 MPH 7- by 10-foot tunnel.

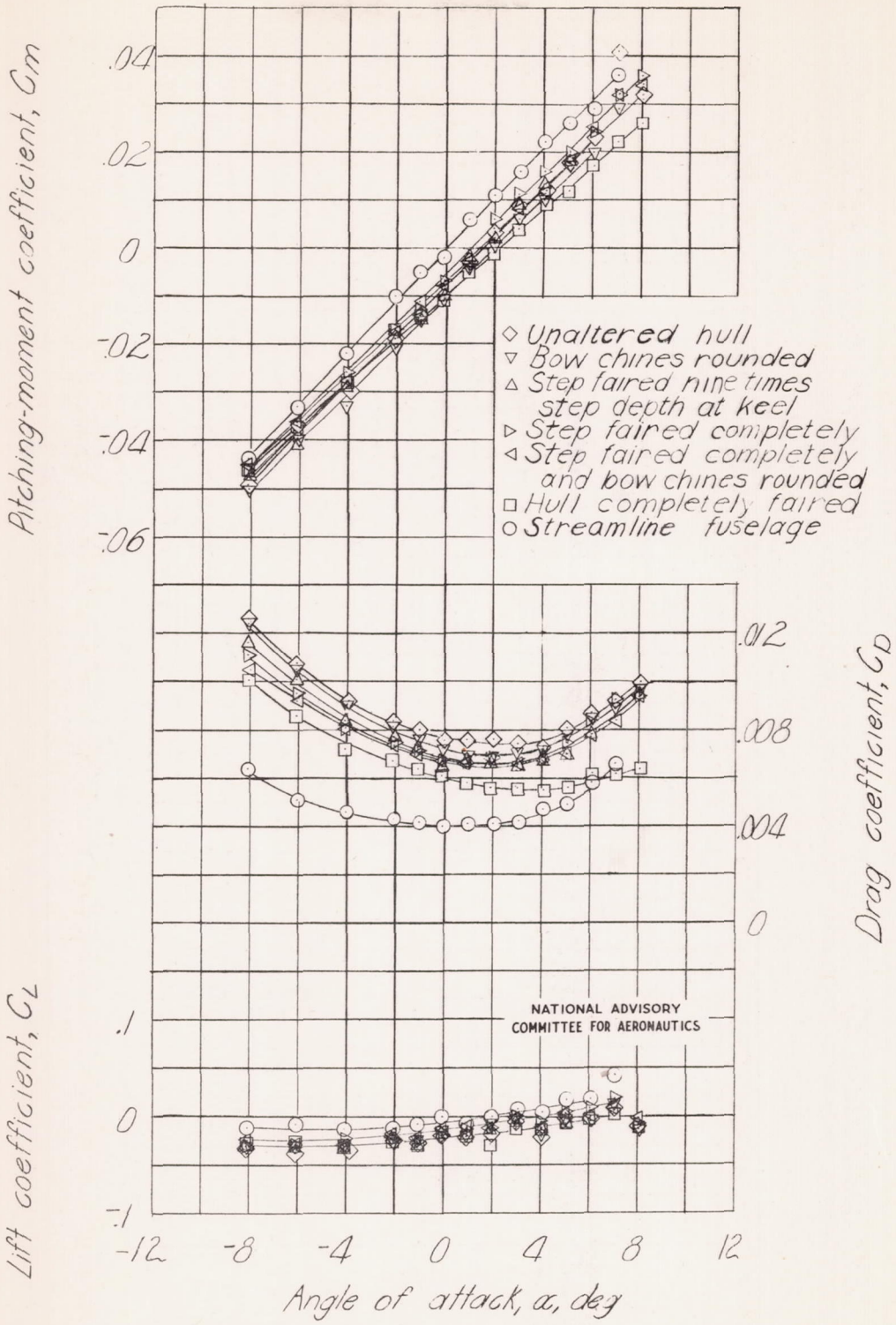

(a) $R \approx 2.4 \times 10^6$.

Figure 8.- Effect of aerodynamic refinement on the aerodynamic characteristics in pitch of Langley tank model 203.

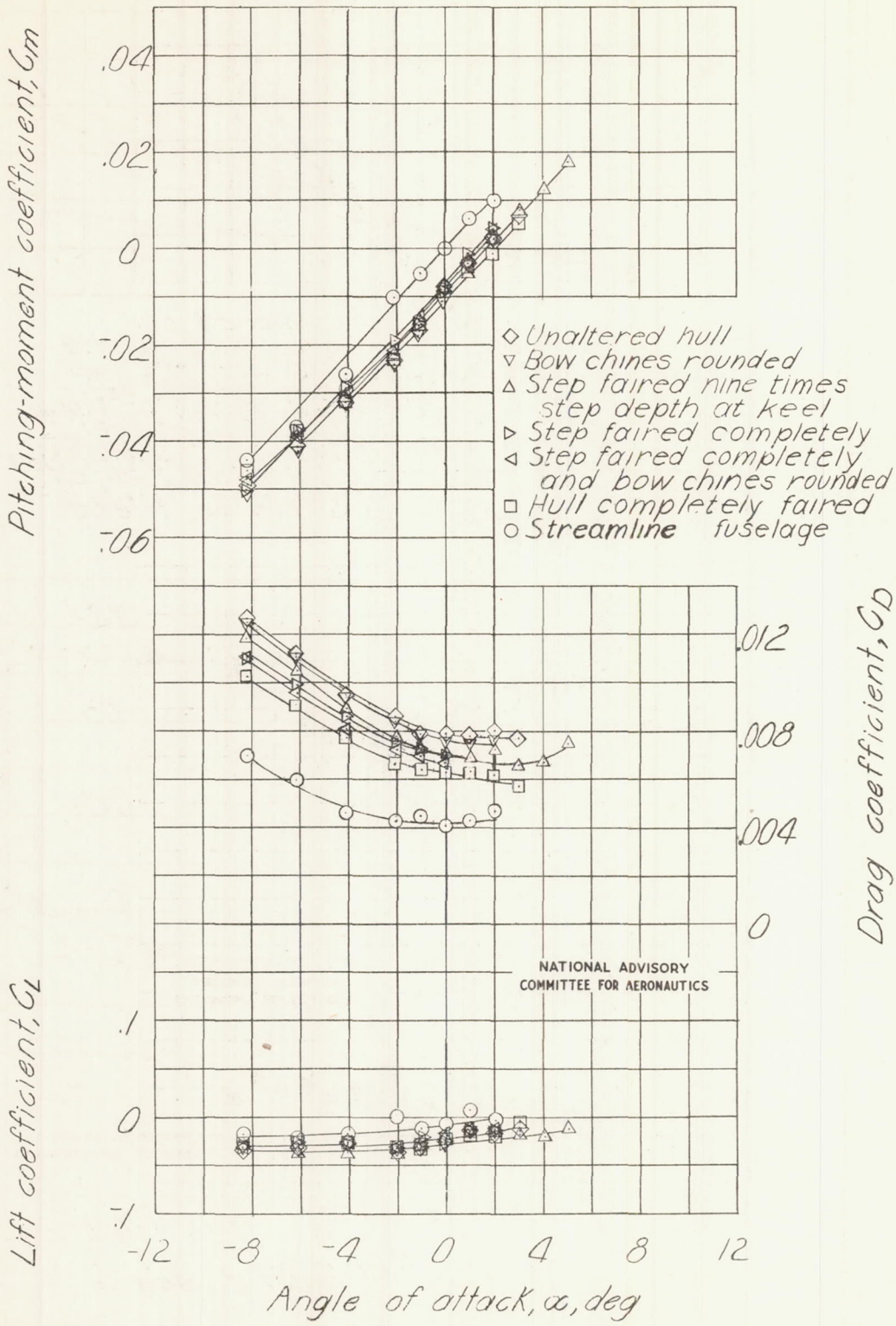

(b) $R \approx 3.0 \times 10^6$.

Figure 8.- Concluded.

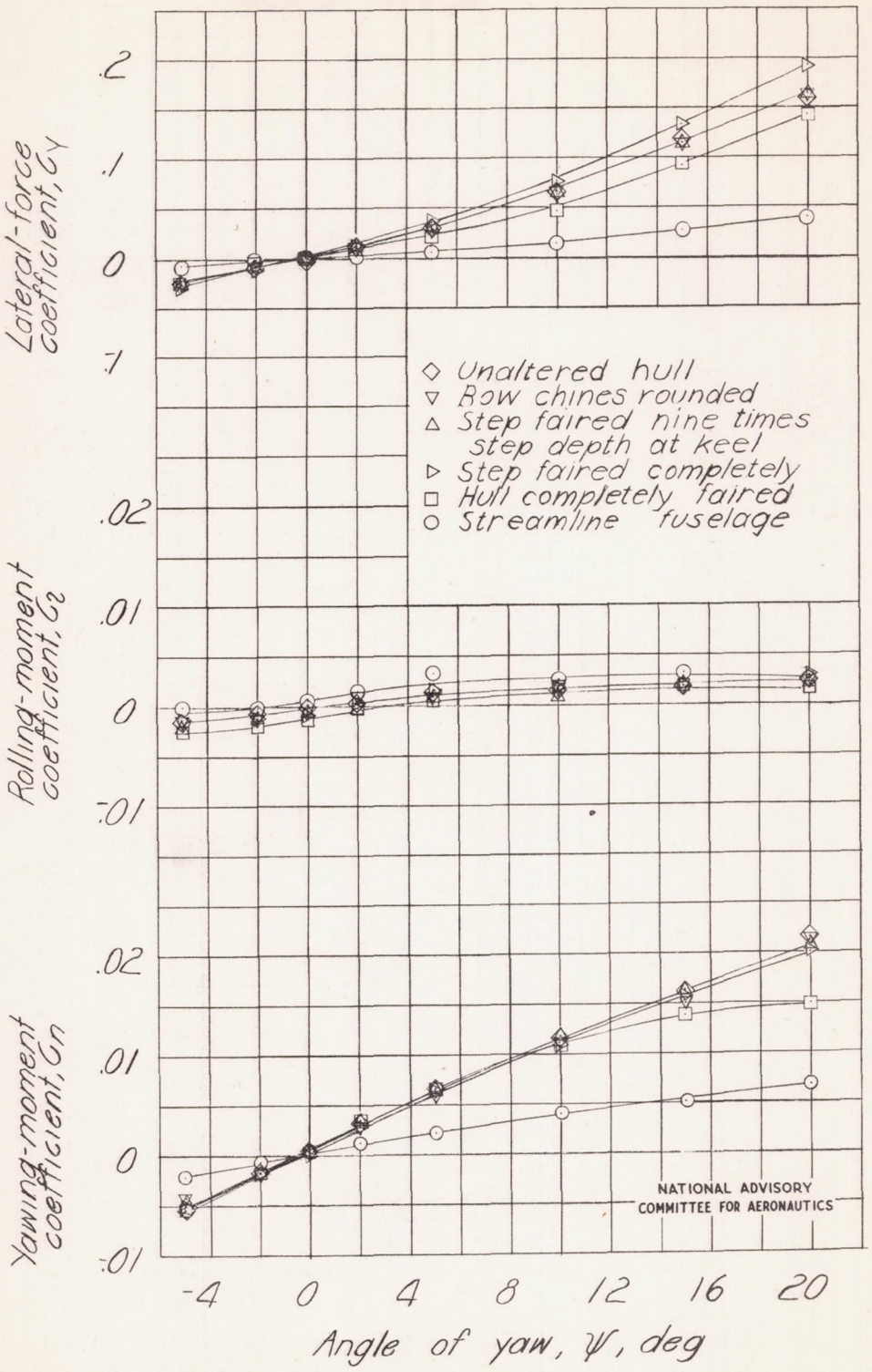

Figure 9.- Effect of aerodynamic refinement on the aerodynamic characteristics in yaw of Langley tank model 203. $R \approx 1.2 \times 10^6$; $\alpha = 2^\circ$.

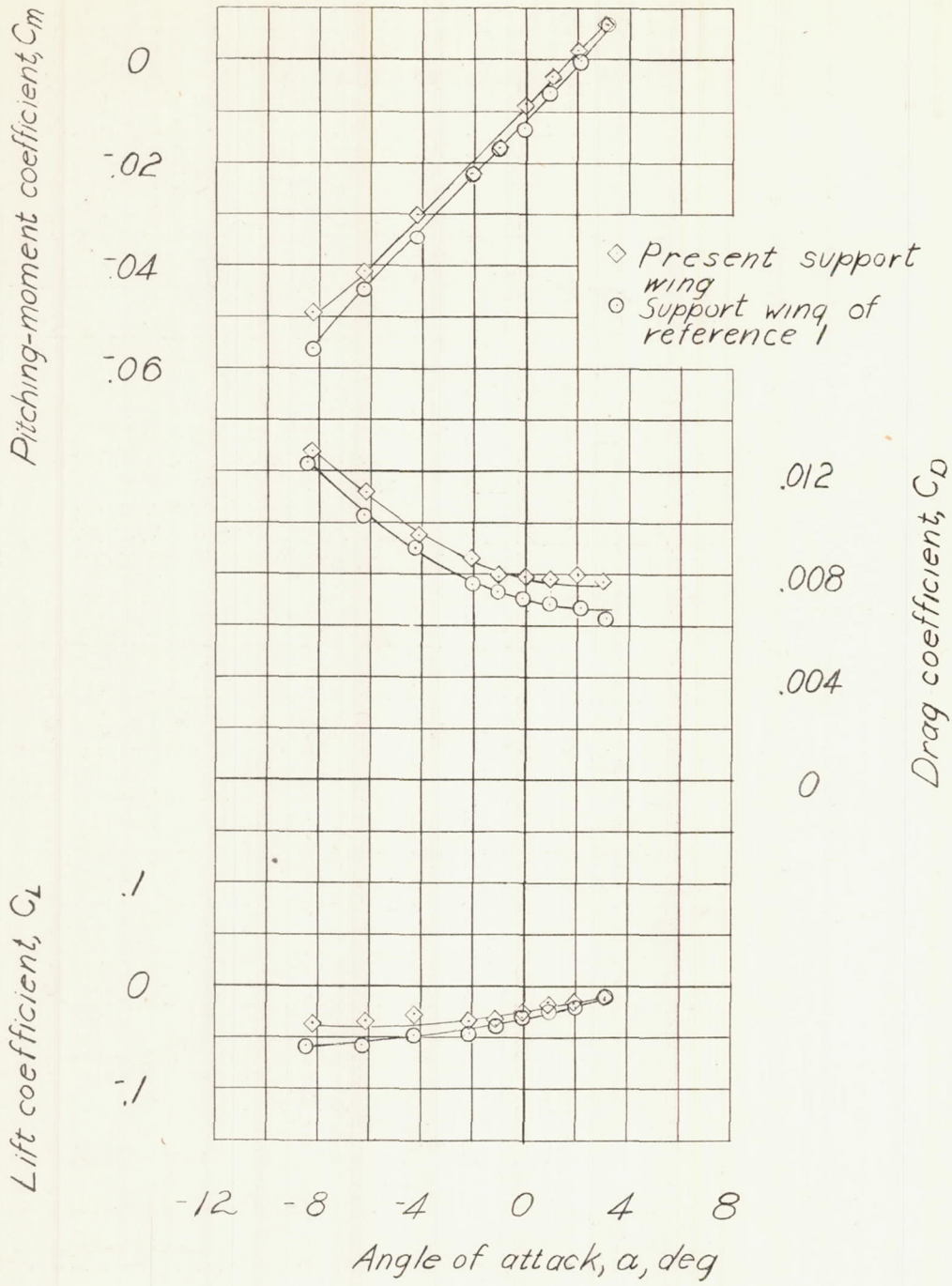

NATIONAL ADVISORY
COMMITTEE FOR AERONAUTICS

Figure 10.- Effect of support-wing interference on the aerodynamic characteristics in pitch of Langley tank model 203. $R \approx 3.0 \times 10^6$.