CASE FILE
COPY

20 pp

NATIONAL ADVISORY COMMITTEE FOR AERONAUTICS

TECHNICAL NOTE

No. 1359

EXPERIMENTAL VERIFICATION OF THE RUDDER-FREE STABILITY THEORY FOR AN AIRPLANE MODEL EQUIPPED WITH A RUDDER HAVING POSITIVE FLOATING TENDENCIES AND VARIOUS AMOUNTS OF FRICTION

By Bernard Maggin

Langley Memorial Aeronautical Laboratory
Langley Field, Va.

Washington
July 1947

NATIONAL ADVISORY COMMITTEE FOR AERONAUTICS

TECHNICAL NOTE NO. 1359

EXPERIMENTAL VERIFICATION OF THE RUDDER-FREE STABILITY THEORY FOR AN AIRPLANE MODEL EQUIPPED WITH A RUDDER HAVING POSITIVE FLOATING TENDENCIES AND VARIOUS AMOUNTS OF FRICTION

By Bernard Maggin

SUMMARY

An investigation has been made in the Langley free-flight tunnel to obtain an experimental verification of the theoretical rudder-free dynamic stability characteristics of an airplane model equipped with a rudder having positive floating tendencies and various amounts of friction in the rudder system. The model was tested mounted on a yaw stand that allowed freedom only in yaw, and a few tests were made in free flight. Tests were made with varying amounts of rudder aerodynamic balance. Most of the stability derivatives required for the theoretical calculations were determined from force and free-oscillation tests of the model. The investigation was limited to the low relative-density range.

The results of the tests and calculations indicated that, with negligible friction in the rudder control system, the general rudder-free stability theory adequately predicts the period and qualitatively predicts the damping of the rudder-free oscillations for the normal range of airplane and rudder parameters. If the general theory is simplified by neglecting rolling, lateral displacement of the center of gravity, and rudder moment of inertia, the theory still adequately predicts the period and quantitatively predicts lower values of the damping of the rudder-free lateral oscillation. The investigation showed that, with friction in the rudder system, a constant-amplitude oscillation exists for a range of combinations of positive floating-moment and negative restoring-moment parameters. A simplified theory approximating solid friction by an equivalent viscous friction predicts the characteristics of the rudder-free lateral stability for values of friction hinge-moment coefficient in the rudder system encountered with present-day airplanes.

INTRODUCTION

Dynamic instability in the rudder-free condition has been experienced by some airplanes. Other airplanes have performed a rudder-free oscillation called "snaking," in which the airplane yaw and rudder motions are so coupled as to maintain a constant-amplitude yawing oscillation. These phenomena have been the subject of various theoretical investigations, and the factors affecting the rudder-free stability have been explored and defined in the theoretical analyses of references 1 to 3.

In order to obtain an experimental check of the various rudder-free theories, a series of tests has been conducted with a $\frac{1}{7}$-scale airplane model in gliding flight in the Langley free-flight tunnel. The first part of this investigation dealt with the experimental results of tests made to determine the rudder-free dynamic stability characteristics of an airplane model equipped with rudders having negative floating tendencies and negligible friction. (See reference 3.) The results of the second part of this investigation, presented herein, deal with the rudder-free dynamic stability of the model equipped with a rudder having positive floating tendencies, negative restoring tendencies, and varying amounts of friction in the rudder system. For convenience an all-movable vertical tail was used to obtain positive floating tendencies, but the results are applicable to any rudder having the range of parameters considered.

The model was tested both in free flight and mounted on a yaw stand that allowed freedom only in yaw in order to determine experimentally the differences caused by neglect of the rolling and lateral motions of an airplane with rudder free.

In order that the results obtained by theory and experiment might be correlated for the conditions without friction in the rudder system, calculations were made by equations involving four degrees of freedom and by equations involving fewer degrees of freedom and neglecting various airplane and rudder parameters. (See reference 3.) For conditions with friction in the rudder system, calculations were made by a simplified theory approximating solid friction by an equivalent viscous friction. (See reference 2.) Various force, hinge-moment, and free-oscillation tests were made in order to determine some of the stability derivatives for the rudder-free stability calculations.

SYMBOLS

W	weight of model, pounds
V	free-stream airspeed, feet per second
S	wing area, square feet
b	wing span, feet
c	wing chord, feet
S_v	vertical-tail (rudder) area, square feet
b_v	span of vertical tail (rudder), feet
m	mass of model, slugs
m_v	mass of vertical tail (rudder), slugs
k_X	radius of gyration of model about longitudinal (X) axis, feet
k_Z	radius of gyration of model about vertical (Z) axis, feet
k_v	radius of gyration of vertical tail (rudder) about hinge axis, feet
$\bar{x}_v$	distance from center of gravity of vertical-tail (rudder) system to hinge axis, feet; positive when center of gravity is back of hinge
I_v	moment of inertia of vertical tail (rudder) about hinge line, slugs per square foot
l	distance from model center of gravity to vertical tail (rudder) hinge line, feet
P	period of oscillations, seconds
T	time required for motions to decrease to one-half amplitude, seconds
t	time, seconds
q	dynamic pressure, pounds per square foot $\left(\frac{1}{2}\rho V^2\right)$
ρ	mass density of air, slugs per cubic foot
μ	model relative-density factor $(m/\rho Sb)$

μ_v vertical-tail (rudder) relative-density factor $(m_v/\rho b_v \bar{c}_v^2)$

$\bar{c}_v$ root-mean-square chord of vertical tail (rudder), feet

β angle of sideslip, radians unless otherwise stated

ψ angle of yaw, radians unless otherwise stated

δ rudder angular deflection, radians unless otherwise stated

C_L lift coefficient $\left(\frac{\text{Lift}}{qS}\right)$

C_Y lateral-force coefficient $\left(\frac{\text{Lateral force}}{qS}\right)$

C_l rolling-moment coefficient $\left(\frac{\text{Rolling moment}}{qSb}\right)$

C_n yawing-moment coefficient $\left(\frac{\text{Yawing moment}}{qSb}\right)$

C_h hinge-moment coefficient $\left(\frac{\text{Hinge moment}}{qb_v\bar{c}_v^2}\right)$

C_{h_f} friction-hinge-moment coefficient $\left(\frac{\text{Friction hinge moment}}{qb_v\bar{c}_v^2}\right)$

C_{Y_β} rate of change of lateral-force coefficient with angle of sideslip $(\partial C_Y/\partial\beta)$

C_{l_β} rate of change of rolling-moment coefficient with angle of sideslip $(\partial C_l/\partial\beta)$

p rolling angular velocity, radians per second

r yawing angular velocity, radians per second

C_{l_p} rate of change of rolling-moment coefficient with rolling angular-velocity factor $\left(\partial C_l/\partial\frac{pb}{2V}\right)$

C_{l_r} rate of change of rolling-moment coefficient with yawing angular-velocity factor $\left(\partial C_l/\partial\frac{rb}{2V}\right)$

C_{n_β} rate of change of yawing-moment coefficient with angle of sideslip $(\partial C_n/\partial\beta)$

C_{n_δ} rate of change of yawing-moment coefficient with rudder angular deflection $(\partial C_n/\partial\delta)$

C_{n_p} rate of change of yawing-moment coefficient with rolling angular-velocity factor $\left(\partial C_n\Big/\partial\frac{pb}{2V}\right)$

C_{n_r} rate of change of yawing-moment coefficient with yawing angular-velocity factor $\left(\partial C_n\Big/\partial\frac{rb}{2V}\right)$

C_{h_ψ} rate of change of rudder hinge-moment coefficient with angle of yaw $(\partial C_h/\partial\psi)$; floating-moment parameter

C_{h_r} rate of change of rudder hinge-moment coefficient with yawing angular-velocity factor $\left(\partial C_h\Big/\partial\frac{rb}{2V}\right)$

C_{h_δ} rate of change of rudder hinge-moment coefficient with rudder angular deflection $(\partial C_h/\partial\delta)$; restoring-moment parameter

$C_{h_{D\delta}}$ rate of change of rudder hinge-moment coefficient with rudder angular-velocity factor $\left(\partial C_h\Big/\partial\left(\frac{\frac{d\delta}{dt}b}{2V}\right)\right)$

$\bar{\psi}$ amplitude of yaw oscillation, degrees

$\bar{\delta}$ amplitude of rudder oscillation, degrees

R Routh's discriminant; boundary for zero damping of the lateral oscillation

APPARATUS

The tests were made in the Langley free-flight tunnel, a complete description of which is given in reference 4. The model used in the tests was a modified $\frac{1}{7}$-scale model of a Fairchild XR2K-1 airplane. Figure 1 is a three-view drawing of the model. The mass, dimensional, and aerodynamic characteristics of the model are presented in table I.

The vertical tail (in this case, the rudder) of the model was a straight-taper all-movable surface with an adjustable hinge line.

Variation of the rudder hinge line allowed for adjustment of the rudder floating-moment parameter C_{h_ψ} and the rudder restoring-moment parameter C_{h_δ}. In addition C_{h_δ} was adjusted by a special spring attachment. Figure 2 is a sketch showing this special spring attachment, the rudder-freeing system, and the friction system. The magnitude of the friction moment in the rudder system was determined by a torque meter which registered the torque required to maintain a steady rotation of the rudder post and pulley.

A photograph of the model installed on the yaw stand used in the tests is shown as figure 3. The stand was fixed to the tunnel floor and allowed the model complete freedom in yaw but restrained it from rolling and sidewise displacement.

TESTS

Tests were made to determine the period and damping of the rudder-free lateral oscillation of the model in free flight and mounted on the yaw stand.

Free-flight tests of the model were made for the conditions for which data are presented under the "Flight" columns of tables II and III. These tests were made by flying the model in the tunnel and by photographing the rudder-free lateral oscillations as described in reference 3. The flight-test program was not more extensive because of the difficulty of obtaining film records of sufficient length during the uncontrolled part of the flight to determine accurately the period and damping of the lateral oscillation.

The yaw-stand tests of the model were made as described in reference 3, for conditions for which data are presented under the "Stand" columns of tables II and III. These tests were made under conditions reproducing those considered in the analytical treatment of reference 2.

The stability derivatives used in the calculations were obtained by the methods described in reference 3.

SCOPE AND METHODS OF CALCULATIONS

By use of the coefficients given in table I, calculations were made of the damping and period of the rudder-free lateral oscillations of the model without friction in the rudder system for the range of rudder parameters indicated in table II. These calculations were made by equations that provided four degrees of freedom as well as the fewer degrees of freedom which resulted from the neglect of rolling or from the neglect of rolling and sidewise displacement of the center of gravity as described.

Calculations were also made of the period and amplitudes of the rudder-free lateral oscillation of the model and of the rudder with friction in the rudder system for the range of rudder parameters indicated in table III. These calculations were made by a simplified theory approximating solid friction by an equivalent viscous friction proposed in reference 2.

RESULTS AND DISCUSSION

The results of the tests and calculations of the airplane and rudder motions are presented in tables II and III. Table II gives the period and reciprocal of the time to damp to one-half amplitude for the conditions investigated without friction; table III gives the period and amplitudes of the airplane and rudder motions for the conditions investigated with friction.

The reciprocal of the time to damp to one-half amplitude was used to evaluate the damping because this value is a direct rather than an inverse measure of the degree of stability. Correlations of the calculated and experimental results are presented in figures 4 to 8.

Rudder-Free Stability without Friction

Calculations and tests.- The stability calculations made by use of the general theory indicate that the motions of an airplane with rudder free consist of two aperiodic modes and two oscillatory modes. In each type of mode, one mode has a period two to six times the other. When rolling is neglected, or rolling and sideslip are neglected, the equations of motion predict only the oscillatory modes. If rolling, lateral motion of the center of gravity, and rudder moment of inertia are neglected, only one oscillatory mode is predicted. This mode corresponds to the long-period mode predicted by the general theory. The yaw-stand and free-flight test results (table II and figs. 9 and 10) indicate that this long-period mode is the predominant yawing motion of the airplane.

All the theories reasonably predict the periods and values of floating-moment and restoring-moment parameters for zero damping of the rudder-free lateral oscillation. Values of the damping of the motion predicted by the various theories, however, are not in agreement. (See table II and fig. 4.) Neglect of the terms involving lateral motion of the center of gravity results in an appreciable reduction in the predicted value of the damping of the rudder-free lateral oscillation.

Correlation of calculated and experimental data.- Good qualitative agreement in prediction of the $R = 0$ boundary by theory and by tests is shown in figure 5, which presents a representative calculated $R = 0$ boundary and the range of conditions covered herein. The yawing and rudder oscillations of the airplane as obtained from yaw-stand tests for tests 6, 7, 9, and 11 (see table II) are presented in figure 10(a).

The data of figure 4 show that the period of the airplane yawing motion obtained in the tests is reasonably predicted by any of the theories considered but that the damping of the motion obtained from the tests is in only fair qualitative agreement with the theories. The damping obtained in the yaw-stand tests agrees more closely with the theory neglecting lateral displacement of the center of gravity and rolling than with the more complete theories. This result is to be expected because the yaw-stand tests simulate the restrictions of the theories neglecting rolling and sideslip, and neglecting rolling, sideslip, and rudder moment of inertia. It would also be expected that the flight-test results would be predicted best by the general theory. Flight tests, however, were not extensive enough to indicate which theory would predict the rudder-free lateral stability characteristics in free flight.

From these data it appears that the theory neglecting rolling, lateral displacement of the center of gravity, and rudder moment of inertia gives lower values of damping of the rudder-free lateral oscillation than the general theory but can be used to predict, at least qualitatively, the characteristics of the rudder-free motion of the airplane.

Rudder-Free Stability with Friction

Calculations.- The results of calculations showing the effect of friction in the rudder system are presented in table III. These data indicate that for some combinations of restoring-moment and floating-moment parameters a constant-amplitude yawing oscillation will result. This oscillation consists of a yawing motion of the airplane accompanied by a rudder oscillation.

The amplitudes of these oscillations are proportional to the amount of friction in the system but the period is independent of friction. Figure 8 shows the combinations of C_{h_ψ} and C_{h_δ} which result in this friction phenomenon.

Tests.- The results of the yaw-stand and flight tests presented in table III and in figures 9 and 10 show that with friction in the rudder system there is a constant-amplitude oscillation for a range of restoring-moment and floating-moment parameters for which, with negligible friction, there is a damped oscillation.

Correlation of calculated and experimental data.- In figures 6 to 8 the results of the tests and calculations made to evaluate the effect of friction on the rudder-free lateral stability characteristics are compared. The data of figure 6 show good qualitative agreement of the damping results obtained by tests and by calculations and indicate that the theory of reference 2 can be used to predict the region of constant-amplitude motion resulting from friction in the rudder system. Figures 7 and 8 show that quantitatively the theory of reference 2 predicts the period of the constant-amplitude oscillation through the range of variables considered but that the amplitude of the rudder and airplane motions are reasonably predicted only up to values of friction-moment coefficient of about 0.015. This value of friction-moment coefficient is well above the average friction-moment coefficient of present-day airplanes, according to a British summary of actual friction hinge moments of service airplanes. This summary showed a minimum friction moment of 1.7 foot-pounds and a maximum of 10.5 foot-pounds. The average friction moment was 4.4 foot-pounds, which corresponded to a value of C_{h_f} of 0.010.

The data of figure 8 show that the theoretical variation of the amplitudes of the airplane yawing motion and rudder motion with friction is a straight line. The test results, however, indicate that the amplitudes are not a linear function of friction but that the rate of increase of amplitude with friction becomes smaller with increasing friction.

CONCLUSIONS

The following conclusions are based on the results of an investigation conducted in the Langley free-flight tunnel to determine the rudder-free dynamic stability characteristics

of an airplane model having a rudder with positive floating tendencies:

1. For the case of negligible friction in the rudder control system, it appears that the general rudder-free stability theory adequately predicts the period and qualitatively predicts the damping of the rudder-free oscillations for the normal range of airplane and rudder parameters. If the general theory is simplified by neglecting rolling, lateral displacement of the center of gravity, and rudder moment of inertia, the theory still adequately predicts the period and quantitatively predicts lower values of damping of the rudder-free lateral oscillation.

2. The investigation showed that, with friction in the rudder system, a constant-amplitude oscillation exists for a range of combinations of positive floating-moment and negative restoring-moment parameters. A simplified theory approximating solid friction by an equivalent viscous friction predicts the characteristics of the rudder-free lateral stability for values of friction hinge-moment coefficient in the rudder system encountered with present-day airplanes.

Langley Memorial Aeronautical Laboratory
National Advisory Committee for Aeronautics
Langley Field, Va., June 14, 1946

REFERENCES

1. Jones, Robert T., and Cohen, Doris: An Analysis of the Stability of an Airplane with Free Controls. NACA Rep. No. 709, 1941.

2. Greenberg, Harry, and Sternfield, Leonard: A Theoretical Investigation of the Lateral Oscillations of an Airplane with Free Rudder with Special Reference to the Effect of Friction. NACA ARR, March 1943.

3. McKinney, Marion O., Jr., and Maggin, Bernard: Experimental Verification of the Rudder-Free Stability Theory for an Airplane Model Equipped with Rudders Having Negative Floating Tendency and Negligible Friction. NACA ARR No. L4J05a, 1944.

4. Shortal, Joseph A., and Osterhout, Clayton J.: Preliminary Stability and Control Tests in the NACA Free-Flight Wind Tunnel and Correlation with Full-Scale Flight Tests. NACA TN No. 810, 1941.

TABLE I

MASS, DIMENSIONAL, AND AERODYNAMIC

CHARACTERISTICS OF MODEL TESTED

W	3.94	$\left(\frac{k_X}{b}\right)^2$	0.027
k_Z	1.08		
S	3.47	$\left(\frac{k_Z}{b}\right)^2$	0.0516
b	4.75	C_{n_δ}	-0.0646
c	0.785	C_{n_β}	0.0841
l	1.85	C_{l_β}	-0.0573
S_v	0.278	C_{Y_β}	-0.43
b_v	0.667	C_L	0.60
$\bar{c}_v$	0.416	C_{l_p}	-0.49
q	1.53	C_{n_p}	-0.0173
μ	3.125	C_{l_r}	0.165
μ_v	12.65	C_{n_r}	-0.106
$\bar{x}_v$	0		

C_{h_δ}	C_{h_ψ}	C_{h_r}	$C_{n_{D\delta}}$	$\left(\frac{k_v}{b}\right)^2$
-0.038 -.083 -.154 -.220	0.079	0.061	-0.079	0.000599
-.011 -.024 -.072 -.081 -.120 -.147 -.228	.156	.124	-.069	.000497
-.007 -.073 -.154 -.243	.236	.184	-.062	.000443

NATIONAL ADVISORY
COMMITTEE FOR AERONAUTICS

TABLE II.- COMPARISON OF PERIOD AND DAMPING FROM FREE-FLIGHT AND YAW-STAND TESTS AND FROM CALCULATIONS

[Negligible friction in rudder system]

Test	Test conditions		Tests				Calculations							
			Flight		Yaw stand		General theory		Rolling neglected		Rolling and side-slip neglected		Rolling, sideslip, and rudder moment of inertia neglected	
	C_{h_ψ}	C_{h_δ}	P	1/T	P	1/T	P	1/T	P	1/T	P	1/T	P	1/T
Long-period oscillation														
1	0.0795	-0.038	---	----	(a)	(a)	1.01	-0.34	1.04	-0.35	1.05	-0.626	1.09	-0.022
2		-.083	---	----	1.56	0.39	1.14	1.14	1.19	1.13	1.20	.771	1.26	.808
3		-.154	---	----	1.63	.58	1.30	1.38	1.36	1.37	1.39	.993	1.39	.972
4		-.220	---	----	1.70	.62	1.36	1.39	1.43	1.37	1.44	.993	1.46	.983
5	.156	-.011	---	----	(a)	(a)	.859	-3.32	.868	-3.37	.759	-3.19	.818	-2.12
6		-.024	(a)	(a)	(a)	(a)	.85	-3.35	-----	-----	-----	------	-----	------
7		-.072	1.3	0.34	1.10	.16	.91	1.00	-----	-----	-----	------	-----	------
8		-.081	---	----	1.18	.267	.949	1.07	.973	1.08	.986	.723	1.04	.825
9		-.120	---	----	1.18	.318	1.08	1.39	-----	-----	-----	------	-----	------
10		-.147	---	----	1.25	.582	1.14	1.49	1.18	1.49	1.19	1.11	1.21	1.08
11		-.175	---	----	1.30	.435	1.20	1.48	-----	-----	-----	------	-----	------
12		-.228	---	----	1.37	.653	1.25	1.49	1.30	1.48	1.31	1.10	1.32	1.08
13	.236	-.007	---	----	(a)	(a)	.755	-4.60	.762	-4.65	.766	-4.92	.694	-3.46
14		-.073	---	----	1.06	.219	.794	.793	.809	.814	.822	.472	.880	.775
15		-.154	---	----	1.12	.333	1.04	1.65	1.08	1.64	1.09	1.26	1.11	1.22
16		-.243	---	----	1.18	.970	1.18	1.59	1.22	1.58	1.23	1.20	1.24	1.18
Short-period oscillation														
2	0.0795	-0.083	---	----	----	-----	0.453	14.41	0.453	14.40	0.453	14.39	-----	------
3		-.154	---	----	----	-----	.292	14.17	.292	14.16	.292	14.17	-----	------
4		-.220	---	----	----	-----	.235	14.16	.235	14.16	.235	14.17	-----	------
8	.156	-.081	---	----	----	-----	.419	15.14	.420	15.17	.419	15.15	-----	------
10		-.147	---	----	----	-----	.272	14.74	.273	14.76	.273	14.76	-----	------
12		-.228	---	----	----	-----	.209	14.75	.209	14.77	.209	14.77	-----	------
14	.236	-.073	---	----	----	-----	.434	15.72	.433	15.71	.433	15.68	-----	------
15		-.154	---	----	----	-----	.249	14.90	.249	14.88	.249	14.90	-----	------
16		-.243	---	----	----	-----	.190	14.96	.190	14.94	.190	14.95	-----	------

[a]Unstable oscillation.

NATIONAL ADVISORY
COMMITTEE FOR AERONAUTICS

TABLE III.- COMPARISON OF PERIOD AND DAMPING FROM FREE-FLIGHT AND YAW-STAND TESTS AND FROM CALCULATIONS

[Friction in rudder system]

Test Conditions			Tests					Calculations		
			Flight		Yaw stand					
C_{h_ψ}	C_{h_δ}	C_{h_f}	P	$\bar{\psi}$	P	$\bar{\psi}$	$\bar{\delta}$	P	$\bar{\psi}$	$\bar{\delta}$
0.0791	-0.038	0.0041	---	---	1.65	10.5	4	1.26	81.6	6.07
.099	-.065	.0041	---	---	1.5	6	4.5	1.27	12.3	20.1
		.0082	---	---	1.5	6.7	3.5		24.6	40.2
		.0123	---	---	1.55	10	4.5		36.9	60.3
		.0164	---	---	1.45	10	6		49.2	80.4
.156	-.024	.0041	(a)	(a)	(a)	(a)	(a)	(a)	(a)	(a)
.156	-.072	.0041	1.2	3.7	1.3	6	8	1.11	5.86	10.5
.156	-.081	.0041	---	---	1.35	8	5	1.27	4.88	7.87
		.0082	---	---	1.45	6.2	5		9.76	15.74
		.0123	---	---	1.65	7	5		14.64	23.61
.156	-.114	.0041	---	---	1.30	5	6	1.47	3.04	2.98
		.0082	---	---	1.6	8.5	7.5		6.08	5.78
		.0123	---	---	1.6	7	5.5		9.12	8.67
		.0164	---	---	1.1	7.5	5		12.16	11.56
.156	-.120	.0041	1.5	2	1.42	5	5.5	1.50	2.68	2.15
		.0082	---	---	1.7	5.5	6		5.37	4.3
		.0123	---	---	1.6	6.5	6		8.06	6.45
		.0164	---	---	1.7	7.1	6.1		10.70	8.60
.156	-.147	.0041	---	---	(b)	(b)	(b)	(b)	(b)	(b)
		.0082	---	---	----	---	---	----	-----	----
		.0123	---	---	----	---	---	----	-----	----
.156	-.175	.0041	(b)	(b)	(b)	(b)	(b)	(b)	(b)	(b)
.156	-.228	.0041	---	---	(b)	(b)	(b)	(b)	(b)	(b)
.195	-.106	.0041	---	---	1.6	5.5	1.2	1.33	2.92	4.08
		.0082	---	---	1.5	5.5	1.5		5.84	8.16
		.0123	---	---	1.45	5.5	2.0		8.76	12.24
		.0164	---	---	1.5	7	1.7		11.68	16.32
.236	-.113	.0041	---	---	.90	2	3.5	1.25	2.74	4.68
		.0082	---	---	.90	4	5		5.48	9.36
		.0123	---	---	.92	5.5	5.5		8.22	14.04
		.0164	---	---	1.5	7.2	7		10.96	18.72
.236	-.154	.0041	---	---		2.7	2.5	1.4	2.9	2.4
		.0082	---	---	1.1	4	4.2		5.8	4.8
		.0123	---	---		5	4.5		8.7	7.2
.236	-.198	.0041	---	---	(b)	(b)	(b)	----	-----	----
		.0082	---	---	(b)	(b)	(b)	----	-----	----
		.0123	---	---	(b)	(b)	(b)	----	-----	----

[a]Unstable oscillation.

[b]Stable oscillation.

NATIONAL ADVISORY
COMMITTEE FOR AERONAUTICS

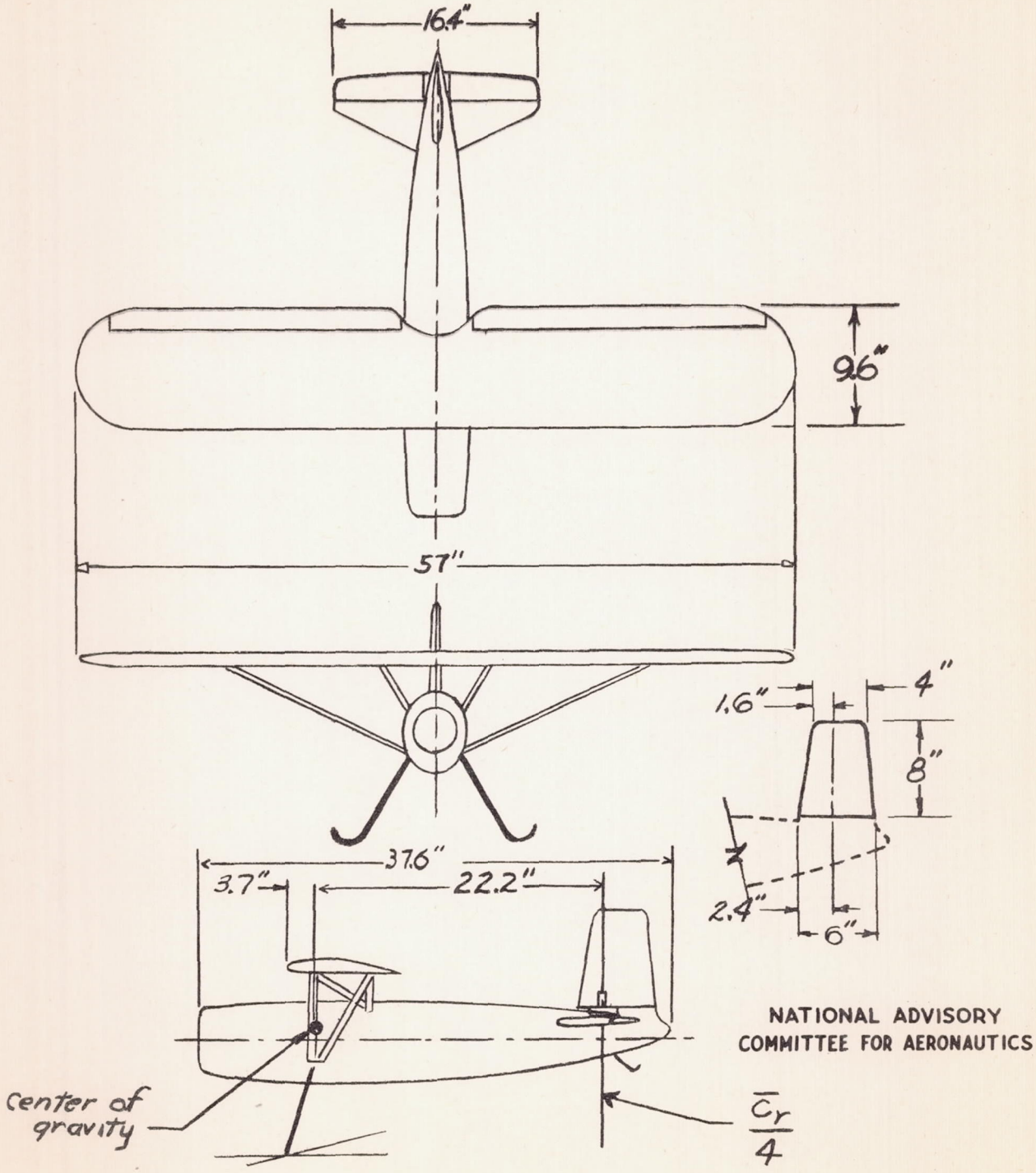

Figure 1.- Three-view drawing of the modified $\frac{1}{7}$-scale model of the Fairchild XR2K-1 airplane.

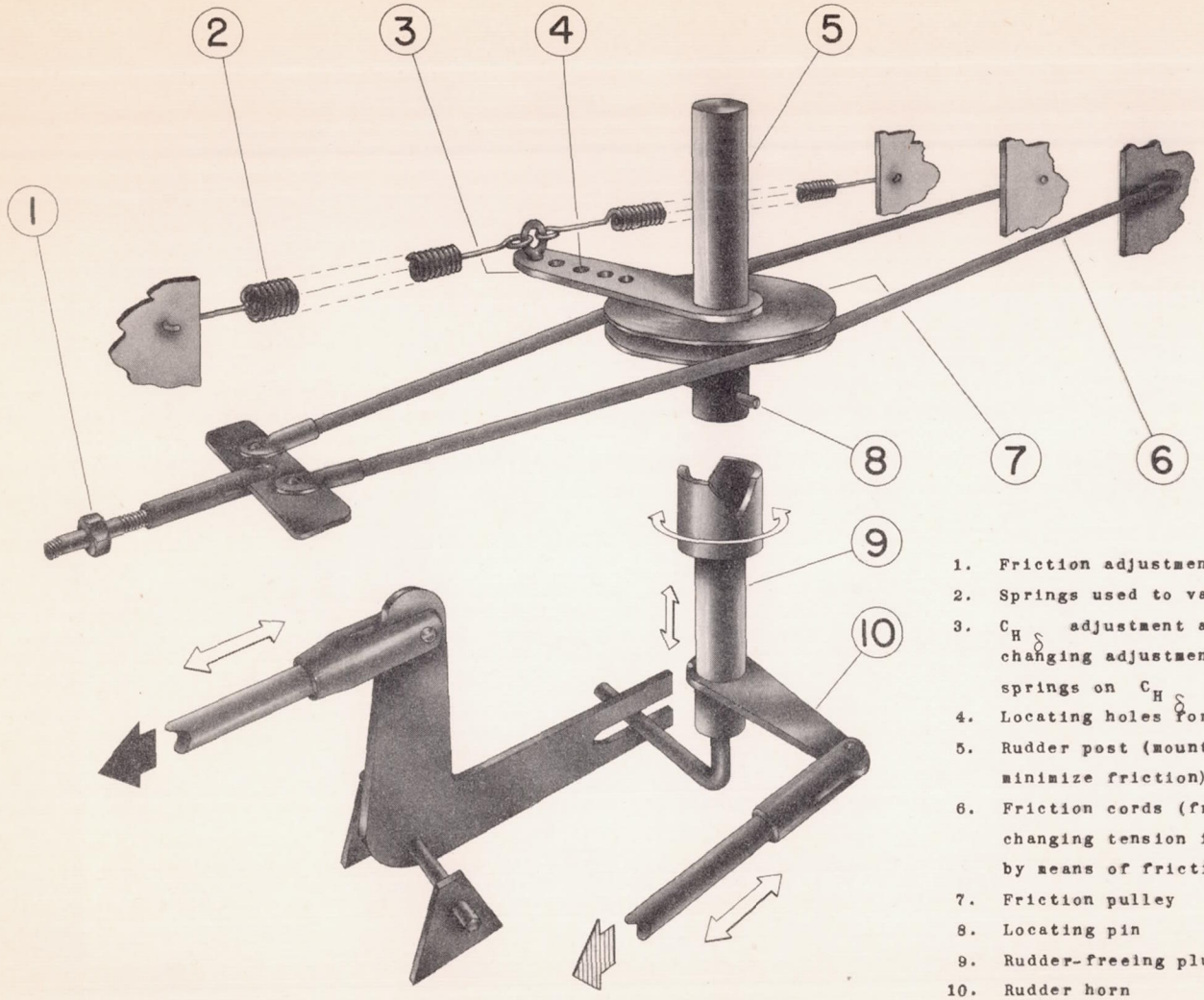

1. Friction adjustment nut
2. Springs used to vary C_{H_δ}
3. C_{H_δ} adjustment arm (C_{H_δ} varied by changing adjustment point of C_{H_δ} springs on C_{H_δ} adjustment arm)
4. Locating holes for C_{H_δ} springs
5. Rudder post (mounted in ball bearing to minimize friction)
6. Friction cords (friction regulated by changing tension in the friction cords by means of friction adjustment nut)
7. Friction pulley
8. Locating pin
9. Rudder-freeing plunger (free position)
10. Rudder horn

To freeing mechanism

To rudder mechanism

NATIONAL ADVISORY
COMMITTEE FOR AERONAUTICS

Figure 2.- Rudder-freeing system, friction system, and system used to vary C_{h_δ} on model used in the study of rudder-free lateral stability characteristics in the Langley free-flight tunnel.

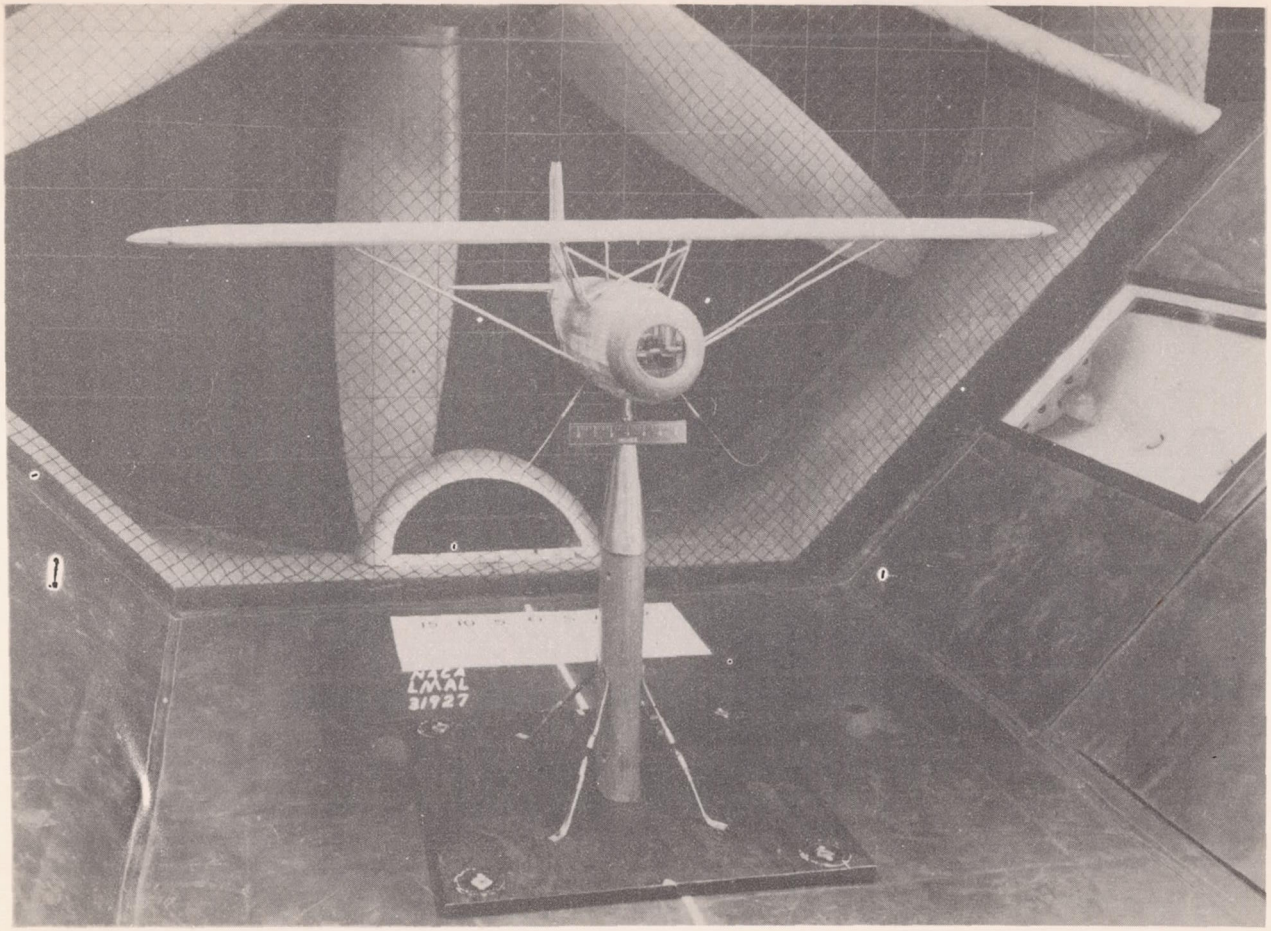

Figure 3.- Three-quarter front view of $\frac{1}{7}$-scale model of modified Fairchild XR2K-1 airplane mounted on yaw stand in Langley free-flight tunnel.

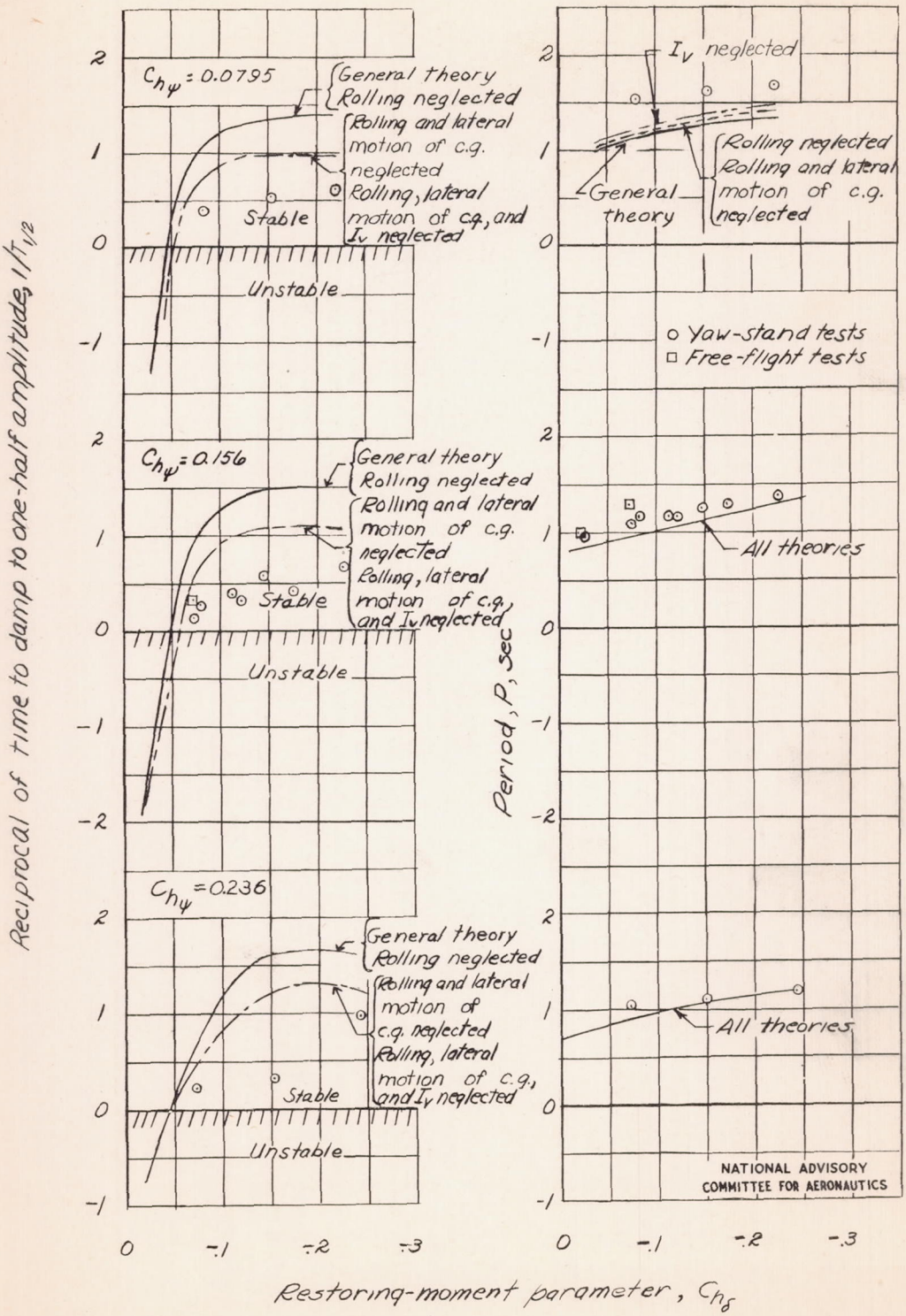

Figure 4.- Comparison of calculated and experimental rudder-free stability characteristics for negligible friction in rudder system.

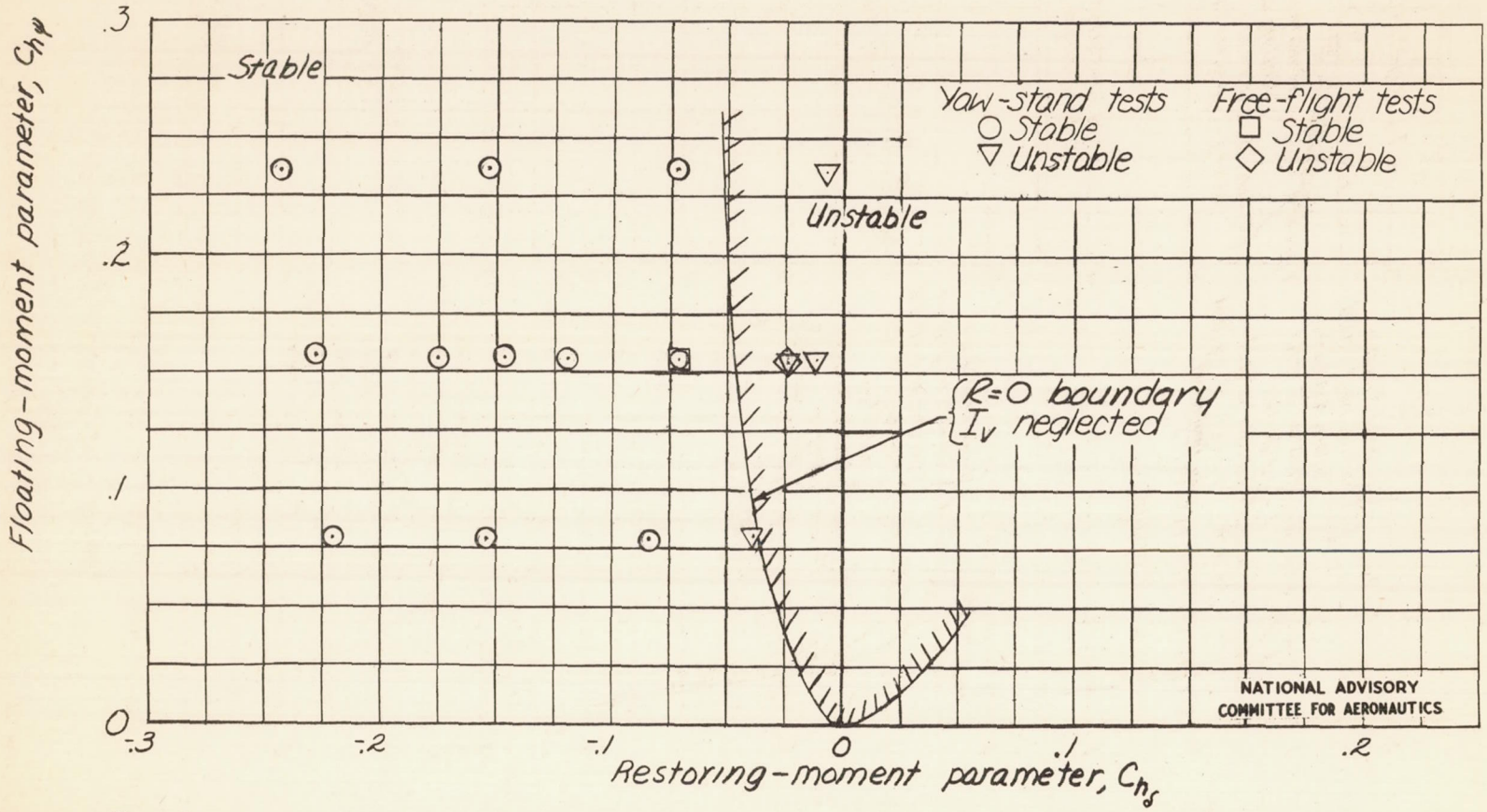

Figure 5.- Comparison of calculated and experimental rudder-free stability characteristics of an airplane model tested in the Langley free-flight tunnel with negligible friction in rudder system.

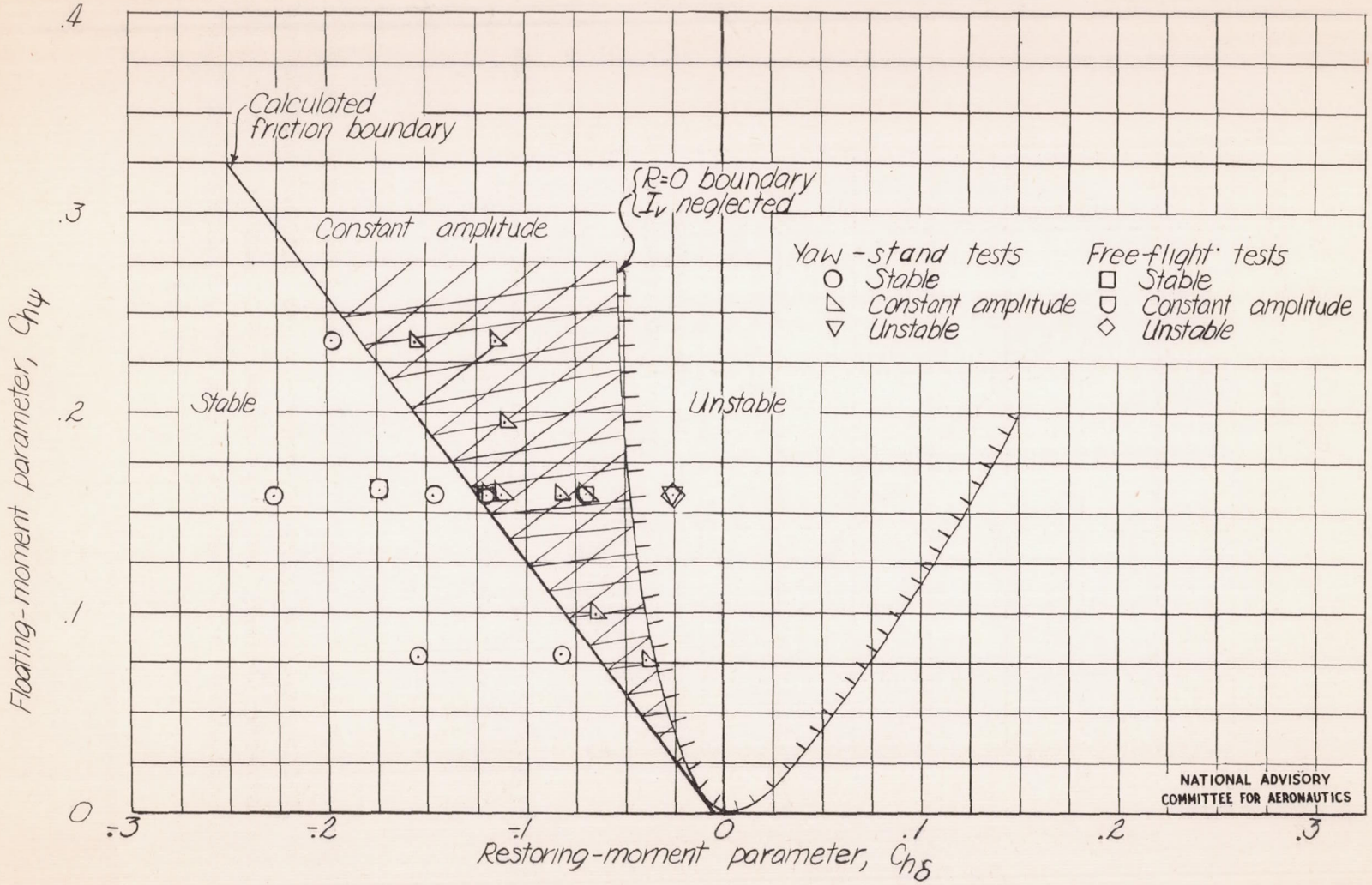

Figure 6.- Comparison of the calculated and experimental rudder-free stability characteristics of an airplane model tested in the Langley free-flight tunnel with friction in rudder system. (Calculated data determined by method of reference 2.)

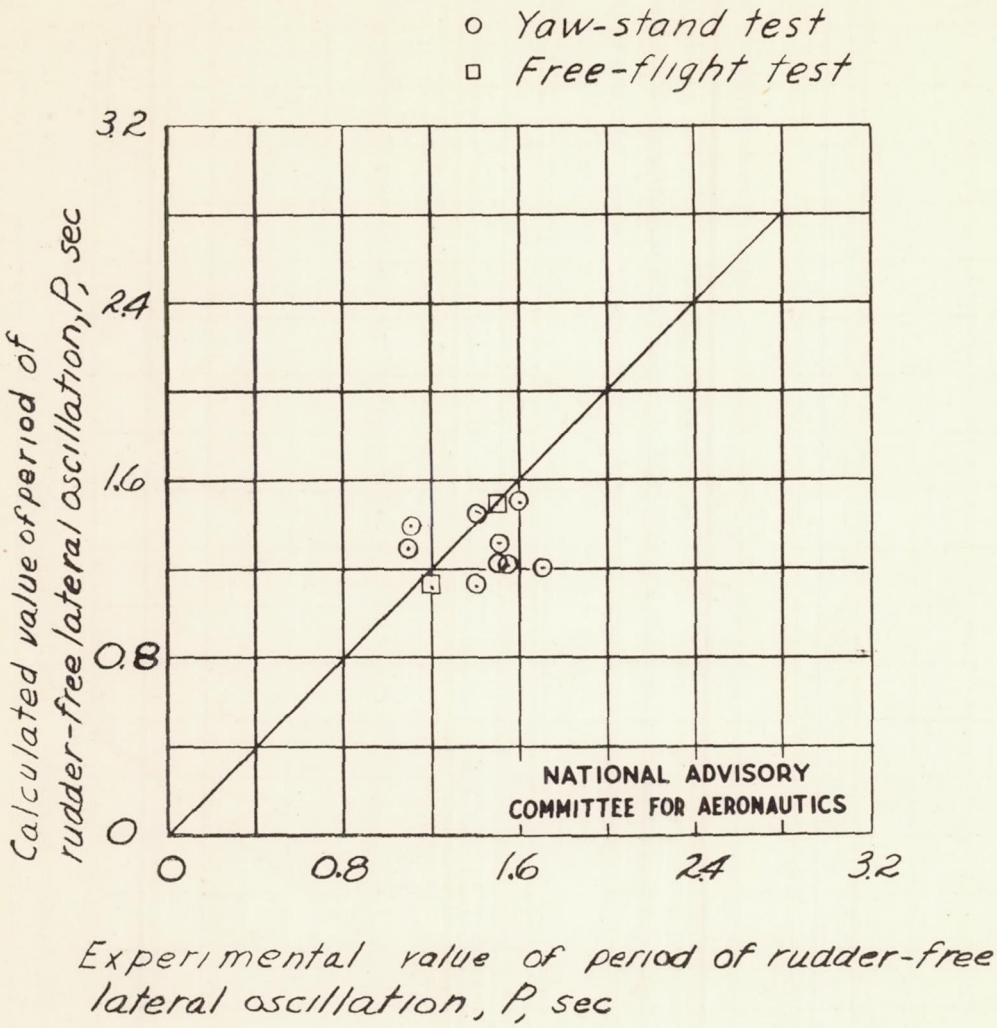

Figure 7.- Comparison of calculated and experimental values of the period of the rudder-free lateral oscillation of an airplane model with friction in rudder system, as determined by the method of reference 3 and by experiment.

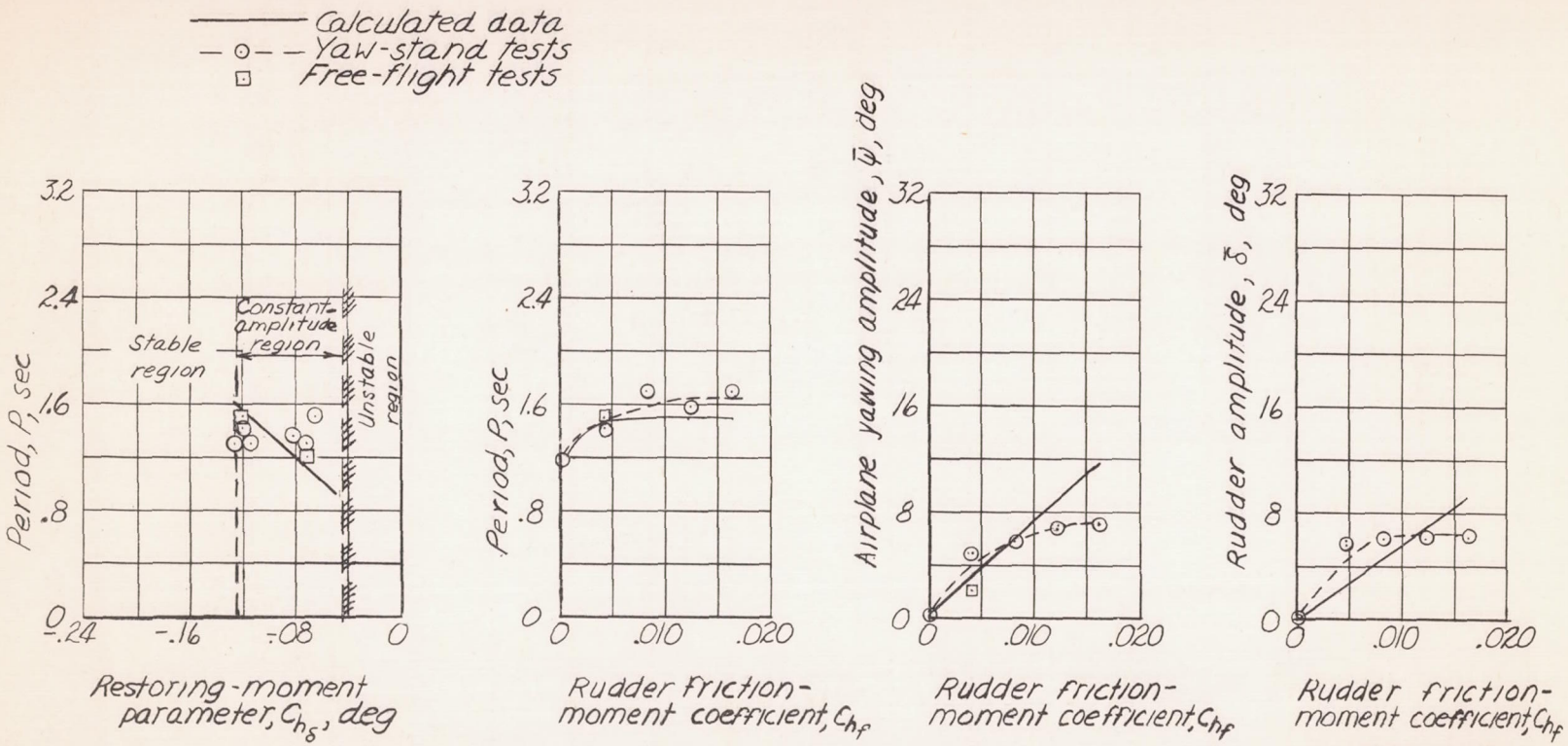

NATIONAL ADVISORY COMMITTEE FOR AERONAUTICS

Figure 8.- Correlation of the results of calculations, yaw-stand tests, and free-flight tests made to determine the effect of friction on the airplane yawing motion and amplitude of the airplane rudder motion. $C_{h_\psi} = 0.156$, $C_{h_\delta} = -0.120$, and $C_{h_f} = 0.0041$ unless otherwise noted.

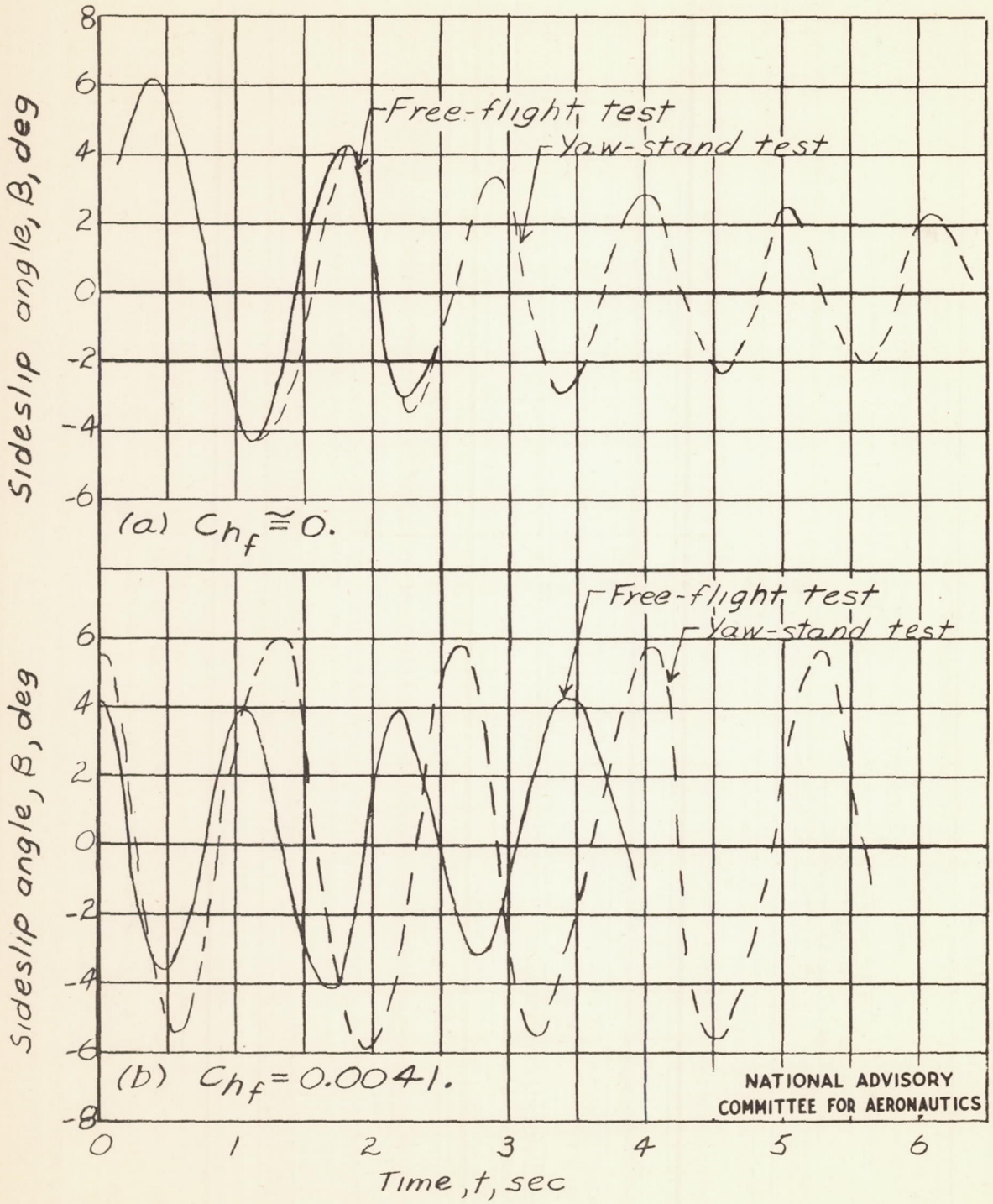

Figure 9.- Comparison of the yawing motion of rudder-free airplane model with and without friction in rudder system, as obtained from yaw-stand and free-flight tests. $C_{h_\delta} = -0.072$; $C_{h_\psi} = 0.156$.

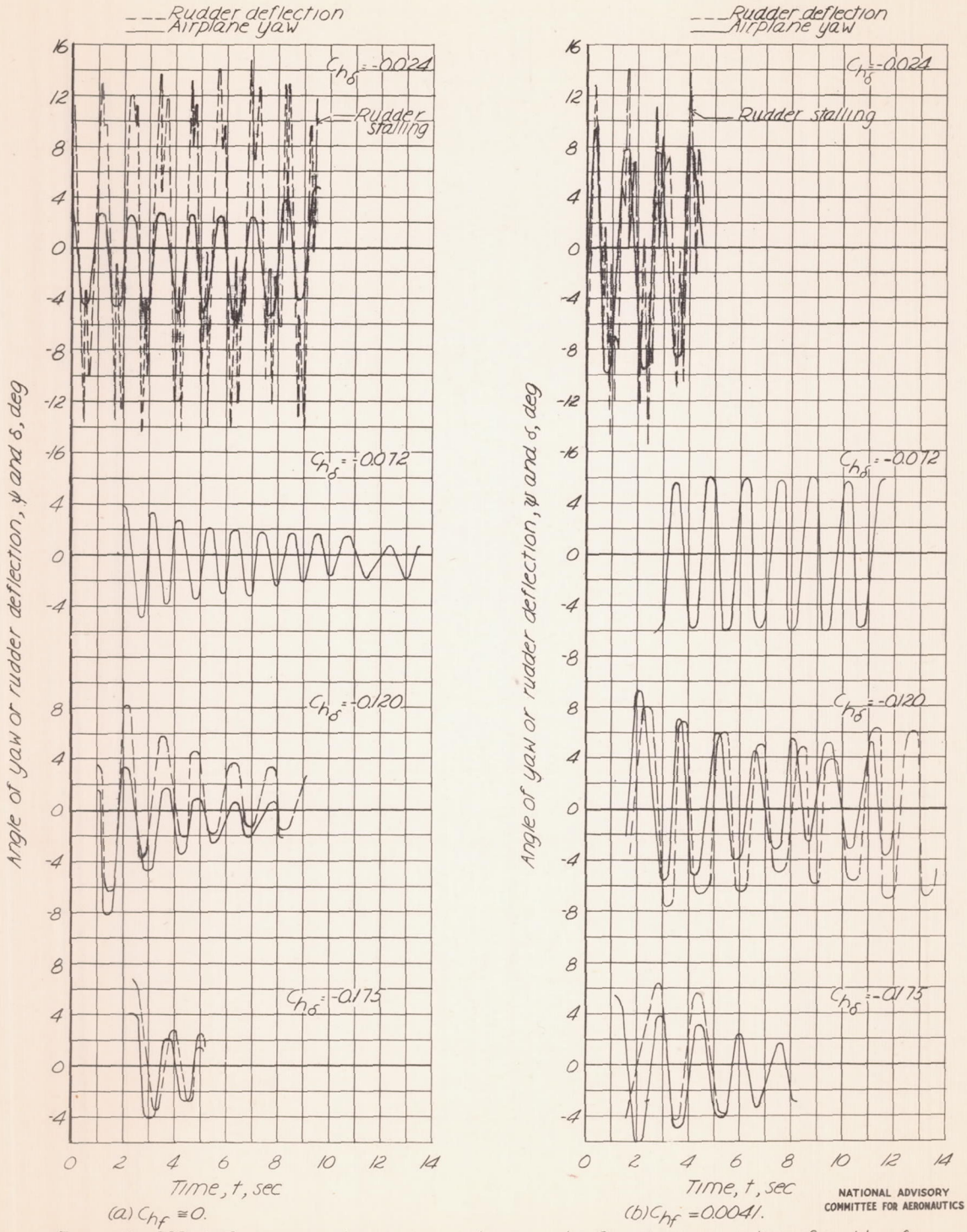

Figure 10.- Effect of varying restoring-moment parameter C_{h_δ} on yawing motion of rudder-free airplane model with and without friction in rudder system, as obtained from yaw-stand tests. C_{h_ψ} = 0.156.