NATIONAL ADVISORY COMMITTEE FOR AERONAUTICS

AUG 11 1947

TECHNICAL NOTE

No. 1400

HINGE-MOMENT CHARACTERISTICS OF BALANCED ELEVATOR AND RUDDER FOR A SPECIFIC TAIL CONFIGURATION ON A FUSELAGE IN SPINNING ATTITUDES

By Ralph W. Stone, Jr. and Sanger M. Burk, Jr.

Langley Memorial Aeronautical Laboratory
Langley Field, Va.

Washington
August 1947

FOR REFERENCE

NOT TO BE TAKEN FROM THIS ROOM

N A C A LIBRARY
LANGLEY MEMORIAL AERONAUTICAL
LABORATORY
Langley Field, Va.

3 1176 01425 8363

NATIONAL ADVISORY COMMITTEE FOR AERONAUTICS

TECHNICAL NOTE NO. 1400

HINGE-MOMENT CHARACTERISTICS OF BALANCED ELEVATOR AND RUDDER FOR A SPECIFIC TAIL CONFIGURATION ON A FUSELAGE IN SPINNING ATTITUDES

By Ralph W. Stone, Jr. and Sanger M. Burk, Jr.

SUMMARY

The results of an investigation of a specific tail configuration in the Langley 15-foot free-spinning tunnel are presented in order to supplement the existing published data on hinge moments of elevators and rudders in spins. Hinge-moment measurements are presented for a balanced elevator equipped with trim tabs and for a balanced rudder. The empennage was mounted on a fuselage and investigated throughout a range of spinning attitude.

The elevator hinge moments had normal variation with angles of attack, yaw, and deflection; but because of the high angles of attack of the tail in spinning attitudes, the balanced elevators had a strong upfloating tendency, indicating that push forces would be generally required for all elevator deflections because the elevators floated to the full-up deflection for most conditions. The analysis indicated that although the elevator balance was effective in reducing or eliminating the pull force required to hold the elevator up in spinning attitudes, it did not affect the force required to push the elevator to neutral. Trim tabs, however, were quite effective in reducing the hinge moments required to move the elevator to neutral or down in spinning attitudes. The rudder hinge moments were greatly affected by angle of attack because of the shielding effect of the horizontal tail and fuselage on the rudder; in general, this shielding effect on the rudder increased with an increase in angle of attack, as indicated by the reduction in rudder hinge moments. The rudder balance appeared to be effective in reducing the rudder pedal forces. At angles of attack greater than approximately 40°, the rudder became overbalanced.

INTRODUCTION

Recovery from the spin is an important problem for all airplane designers, and tail design has been found to be a primary factor affecting recovery characteristics of an airplane. In reference 1,

tail design is considered from the standpoint of effectiveness in producing a spin recovery without regard to the forces involved in moving the controls for recovery. Tail design, however effective, will not produce a spin recovery if the controls cannot be moved. In some cases, the elevator and rudder control forces necessary for recovery from spins may be greater than the pilot can exert; thus recovery may not be obtainable.

Previous wind-tunnel investigations of hinge moments in spinning attitudes have been conducted with a horizontal tail having an elevator of various amounts of balance mounted on a fuselage (reference 2) and with an isolated horizontal-vertical-tail combination having an unbalanced elevator and rudder (reference 3). The latter investigation covered a range of horizontal-tail position relative to the vertical tail.

In order to add to the existing data on hinge moments of elevators and rudders in spins, the results of an investigation for a specific tail configuration in the Langley 15-foot free-spinning tunnel are made available herein. The control surfaces tested had nose balances and the elevator was provided with two sizes of trim tabs. Only the hinge-moment characteristics of the control surfaces are considered.

COEFFICIENTS AND SYMBOLS

C_{h_e} elevator hinge-moment coefficient $\left(H_e/qb_e\bar{c}_e^2\right)$

C_{h_r} rudder hinge-moment coefficient $\left(H_r/qb_r\bar{c}_r^2\right)$

H_e elevator hinge moment (positive when it tends to depress the elevator trailing edge), foot-pounds

q dynamic pressure, pounds per square foot $\left(\frac{\rho V^2}{2}\right)$

ρ air density, slugs per cubic foot

V velocity, feet per second

b_e elevator span along hinge axis, feet

H_r rudder hinge moment (positive when it tends to deflect rudder to left), foot-pounds

b_r rudder height along hinge axis, feet

$\bar{c}_e$ root-mean-square chord of elevator (rearward of hinge line), feet

$\bar{c}_r$ root-mean-square chord of rudder (rearward of hinge line), feet

$c_{h.t.}$ local chord of horizontal tail, feet

c_e local chord of elevator (rearward of hinge line), feet

$c_{v.t.}$ local chord of vertical tail, feet

c_r local chord of rudder (rearward of hinge line), feet

δ_e elevator deflection with respect to chord line of stabilizer (positive when trailing edge is deflected down), degrees

δ_r rudder deflection with respect to chord line of fin (positive when trailing edge is deflected to left), degrees

δ_{t_e} elevator trim-tab deflection with respect to chord line of elevator (positive when trailing edge is deflected down), degrees

α angle of attack referred to chord of horizontal tail, degrees

ψ angle of yaw (positive when nose of airplane is to right of flight path), degrees

β angle of sideslip (positive when relative wind comes from right of plane of symmetry), degrees

C_{h_δ} rate of change of hinge-moment coefficient with control-surface deflection

APPARATUS AND METHODS

Apparatus

The fuselage and tail assembly used for these tests were constructed at the Langley Laboratory of the NACA. A wing was not constructed for the present tests because it was believed that the wing of an airplane of conventional design in spinning attitudes would not greatly affect its elevator and rudder hinge moments. The tail surfaces had a modified NACA 0009 airfoil section. The elevator had 31.8-percent balance and the rudder had 27.9-percent balance. Both the elevator and rudder had elliptical nose balances and, in addition, the elevator was tested with two different sizes

of trim tabs. The control gaps between the fin and rudder and the stabilizer and elevator were unsealed and were 1.0 percent of the local chords of the vertical and horizontal tails. A three-view drawing of the model is presented in figure 1. In figure 2 is shown a detailed sketch of the horizontal and vertical tail surfaces. The relative sizes of two elevator trim tabs tested are also shown in figure 2. The dimensional characteristics of the horizontal and vertical tails are presented in table I.

Methods

The elevator and rudder were held by friction clamps on the hinge rods at the desired deflection while the tab was held at its deflection by the stiffness of bent aluminum hinges. All deflections were set by templets. The elevator and rudder hinge moments were measured electrically by strain gages mounted in the model. These gages were calibrated by applying a series of known moments to the elevator and the rudder.

The attitude of the model was varied to simulate the angles of attack and sideslip at the tail of an airplane in a spin. The desired values of sideslip were obtained by yawing the model about the stability Z-axis, which is perpendicular to the vertically rising air stream. The stability axes are defined as an orthogonal system of axes having their origin at the center of gravity and in which the Z-axis is in the plane of symmetry and perpendicular to the relative wind, the X-axis is in the plane of symmetry and perpendicular to the Z-axis, and the Y-axis is perpendicular to the plane of symmetry. A sketch of the model mounted for tests in the Langley 15-foot free-spinning tunnel is presented in figure 3.

TESTS

All tests were conducted in the Langley 15-foot free-spinning tunnel and were made at a dynamic pressure of 3 pounds per square foot, which corresponds to an airspeed of 34.2 miles per hour under standard sea-level conditions. The turbulence factor of the tunnel was 1.78. The angles of attack as set on the model represent the angles of attack of the horizontal stabilizer. The angles of yaw as set on the model may be interpreted as angles of sideslip that would be encountered at the tail of an airplane in a spin; the angle of sideslip is equal in magnitude to the angle of yaw but has the opposite sign.

Elevator Hinge-Moment Tests

The elevator hinge-moment tests were made through a range of angle of attack from 20° to 70° in 10° increments; the elevator deflections were -30°, -10°, 0°, and 20°. For each angle of attack the model was arbitrarily tested at angles of yaw of 0°, -10°, and -20°. The elevator hinge-moment tests were conducted with the rudder at neutral; and as there was no fin offset, results obtained with the model yawed to the left were considered applicable for the corresponding conditions of the model yawed to the right.

Two sizes of elevator trim tabs were tested: a small tab, the area of which was 11.50 percent of the elevator area (behind hinge line), and a large tab, the area of which was 25.60 percent of the elevator area (behind hinge line). The small tab was deflected 14° and 20° up and the large tab was deflected 14° up.

Rudder Hinge-Moment Tests

The rudder hinge-moment tests were made through a range of angle of attack from 20° to 70° in 10° increments at rudder deflections of 0°, -12.5°, and -25° and at elevator deflections of 20°, 0°, and -30°. Also, for each angle of attack, the angle of yaw was varied from 20° to -20° in 10° increments. The data may be interpreted as representative of rudder-with or rudder-against spins. Table II shows in detail how the various figures may be considered to represent different spinning conditions. For example, a positive angle of yaw with right rudder (negative deflection) may be considered as representative of outward sideslip in a right spin with rudder with the spin or of inward sideslip in a left spin with rudder against the spin. Similarly, a negative angle of yaw with right rudder may be considered representative of inward sideslip in a right spin with rudder with the spin or of outward sideslip in a left spin with rudder against the spin. As previously mentioned, the model had no fin offset and, therefore, the results obtained with a negative rudder deflection may also be considered as representative of positive rudder deflection provided the rudder hinge-moment-coefficient signs are reversed.

CORRECTIONS

Inasmuch as the size of the tail surfaces of the model was relatively small compared with the diameter of the tunnel, no corrections were made for the effect of the walls on the tail surfaces. Interference effects of the model mounting strut have also been neglected. The analysis of the hinge-moment data was based on

aerodynamic forces on the elevator and rudder; no corrections were made for the effects of any frictional or centrifugal forces which may exist on the airplane control surfaces in a spin.

RESULTS AND DISCUSSION

Elevator Hinge Moments

Elevator hinge-moment coefficient as a function of angle of attack at angles of yaw of 0°, -10°, and -20° and at various elevator settings is presented in figure 4. This figure shows that the elevator hinge-moment coefficients were generally negative and became more negative as the angle of attack increased (that is, greater tendency for the elevator to float up); consequently, push forces would be required in a spin to deflect the elevator to any position other than full up. The slope of the curve of elevator hinge-moment coefficient for various elevator deflections remained negative for all conditions tested. The effect of nose balance on the elevator hinge moments may be seen in figure 5, which gives a comparison of the hinge-moment coefficients of the balanced elevator in the present paper with those of a plain and balanced elevator in reference 2. It will be seen that the elevator balance reduced the variation of hinge moment with elevator deflection ($\delta_e = -30^{\circ}$) but did not reduce the hinge moments with 0° elevator deflection for the angles of attack tested. The negative hinge-moment coefficients with either type elevator at neutral deflection were quite high in this range of angle of attack, probably because of a flattening of the chordwise pressure gradient of the horizontal tail with a resultant rearward shift in center of pressure when the angles of attack of the tail surfaces exceeded the stalling angle. The over-all effect of the balance in reducing push forces on the elevator required for spin recovery was therefore slight. The largest elevator forces will occur at the lowest angle of attack of the tail in the spin because as the angle of attack decreases the rate of descent of the spinning airplane greatly increases with a consequent large increase in dynamic pressure for the low angles of attack (reference 3).

The elevator hinge-moment coefficient varied only slightly with angle of yaw. The effect of rudder deflection on the elevator hinge moments was not determined, but it is believed that the effect would have been small.

Increments of elevator hinge-moment coefficient caused by upward trim-tab deflections as functions of angle of attack at various elevator deflections are presented in figure 6. It appears that tabs can be used as trimming devices in a spin because they maintain their effectiveness in changing the elevator hinge-moment coefficients at angles above the stall in the spinning range. Upward (negative)

deflection of the tab tends to reduce the free upfloating angle of the elevator in a spin and, consequently, the stick forces are lowered. The tabs were most effective in changing the elevator hinge-moment coefficients when the elevator was neutral and became less effective as the elevator was deflected in either direction. The effectiveness of the small tab, in general, remained approximately constant throughout the angle-of-attack range. The effectiveness of the large tab, however, decreased appreciably with an increase in angle of attack from 20° to 70° although even with this decrease the effectiveness of the large tab still remained greater than that of the small tab at the highest angles of attack tested. Increasing the deflection of the small tab from 14° to 20° up (fig. 7) had no appreciable effect on the increments of elevator hinge-moment coefficient.

Rudder Hinge Moments

Rudder hinge-moment coefficients plotted against angle of attack for various angles of yaw and rudder deflections are presented in figure 8. In general, the shielding effect of the horizontal tail and fuselage on the rudder increased with an increase in angle of attack (as indicated by a reduction in hinge moments), which result agrees with the results obtained in reference 3. The increase in shielding with angle of attack is explainable as a result of the movement of the wake of the horizontal tail as the angle of attack increases. This wake encompasses only the lower and rearward sections of the rudder at low angles of attack and moves upward and forward as the angle of attack increases with the front of the wake boundary pivoting about the leading edge of the stabilizer.

The effect of nose balance on the rudder hinge moments may be seen in figure 9, which gives a comparison between the hinge-moment coefficients of the balanced rudder from the present paper with those of the unbalanced rudder obtained from reference 3. From this comparison, the aerodynamic balance appeared to be effective in reducing the rudder hinge moments. As for the elevator, the highest rudder pedal forces would be encountered at the lowest angles of attack of the spin. For low spinning angles of attack (20° and 30°), C_{h_δ} for the rudder was negative. When the angle of attack was increased above 40°, however, C_{h_δ} generally became positive; this result indicates that the rudder had become overbalanced. This overbalance is a result of the previously mentioned shielding effect of the horizontal tail on the rudder and the pressure distribution over the unshielded section of the rudder. This characteristic is undesirable but may not be objectionable inasmuch as the forces would normally be low because of the low rate of descent at these high angles of attack.

Application of Hinge-Moment Data

By the method presented in reference 3, the approximate rudder pedal forces required to reverse the rudder in a spin can be calculated for an airplane having approximately the same percentage rudder balance and tail configuration as the present one tested provided the angle of attack and sideslip in the spin are known.

The approximate elevator stick forces can be estimated by employing the same methods used for the calculation of rudder pedal forces in reference 3 provided the elevator characteristics are substituted in the formula.

CONCLUSIONS

The following conclusions are based on the results of an investigation to determine the hinge-moment characteristics of a balanced elevator and a balanced rudder mounted on a fuselage in attitudes simulating spin conditions without regard to the effectiveness of the control surfaces in producing a recovery:

1. The elevator hinge-moment coefficients varied normally with angles of attack, yaw, and deflection; but because of the high angles of attack of the tail in spinning attitudes, the elevators had a strong upfloating tendency and push forces were required to deflect the elevators.

2. The elevator balance was effective in reducing or eliminating the pull force which would be required to hold the elevator up in spinning attitudes but did not affect the force required to push the elevator to neutral.

3. Trim tabs were quite effective in reducing the hinge moments required to move the elevator to neutral or down in spinning attitudes.

4. The shielding effect of the horizontal tail and fuselage on the rudder increased with an increase in angle of attack, as indicated by the reduction in rudder hinge moments.

5. The rudder balance appeared to be effective in reducing the rudder pedal forces. At angles of attack greater than approximately 40°, the rudder became overbalanced.

Langley Memorial Aeronautical Laboratory
National Advisory Committee for Aeronautics
Langley Field, Va., June 9, 1947

REFERENCES

1. Neihouse, Anshal I., Lichtenstein, Jacob H., and Pepoon, Philip W.: Tail-Design Requirements for Satisfactory Spin Recovery. NACA TN No. 1045, 1946.

2. Sears, Richard I., and Hoggard, H. Page, Jr.: Characteristics of Plain and Balanced Elevators on a Typical Pursuit Fuselage at Attitudes Simulating Normal-Flight and Spin Conditions. NACA ARR, March 1942.

3. Stone, Ralph W., Jr., and Burk, Sanger M., Jr.: Effect of Horizontal-Tail Position on the Hinge Moments of an Unbalanced Rudder in Attitudes Simulating Spin Conditions. NACA TN No. 1337, 1947.

TABLE I.- DIMENSIONAL CHARACTERISTICS OF HORIZONTAL AND VERTICAL TAILS

Horizontal tail surfaces:	
Total area, sq in.	147.20
Tail span (projected), in.	26.0
Dihedral of tail, deg.	10.0
Total elevator area rearward of hinge line, sq in.	39.16
Balance area, percent of elevator area rearward of hinge line	31.8
Elevator root-mean-square chord based on actual elevator span, in.	2.13
Actual span of both elevators along hinge axis, in.	19.40
Small tab area (total), sq in.	4.50
Small tab area, percent of elevator area rearward of hinge line	11.50
Large tab area (total), sq in.	10.00
Large tab area, percent of elevator area rearward of hinge line	25.60
Vertical tail surfaces:	
Total area, sq in.	90.14
Total rudder area rearward of hinge line, sq in.	40.7
Balance area, percent of rudder area rearward of hinge line.	27.9
Rudder root-mean-square chord, in.	3.76
Rudder height along hinge line, in.	10.75

NATIONAL ADVISORY
COMMITTEE FOR AERONAUTICS

TABLE II.- INTERPRETATION OF RUDDER HINGE-MOMENT-COEFFICIENT CURVES

FOR RIGHT OR LEFT SPINS

Rudder deflection, δ_r	Direction of sideslip β (right spin)[b]		
With spin	0	Outward	Inward
Neutral	0	Outward	Inward
Against spin[a]	0	Inward	Outward
	Direction of sideslip β (left spin)[b]		
With spin[a]	0	Outward	Inward
Neutral	0	Inward	Outward
Against spin	0	Inward	Outward
Read C_{h_r} from figures.-	8(c)	8(a) and 8(b)	8(d) and 8(e)

[a]Sign of rudder hinge-moment coefficient, deflection, and angle of yaw must be reversed for this condition.

[b]Sideslip at the tail of the airplane is opposite in sign and equal in magnitude to values of ψ presented in figures.

NATIONAL ADVISORY
COMMITTEE FOR AERONAUTICS

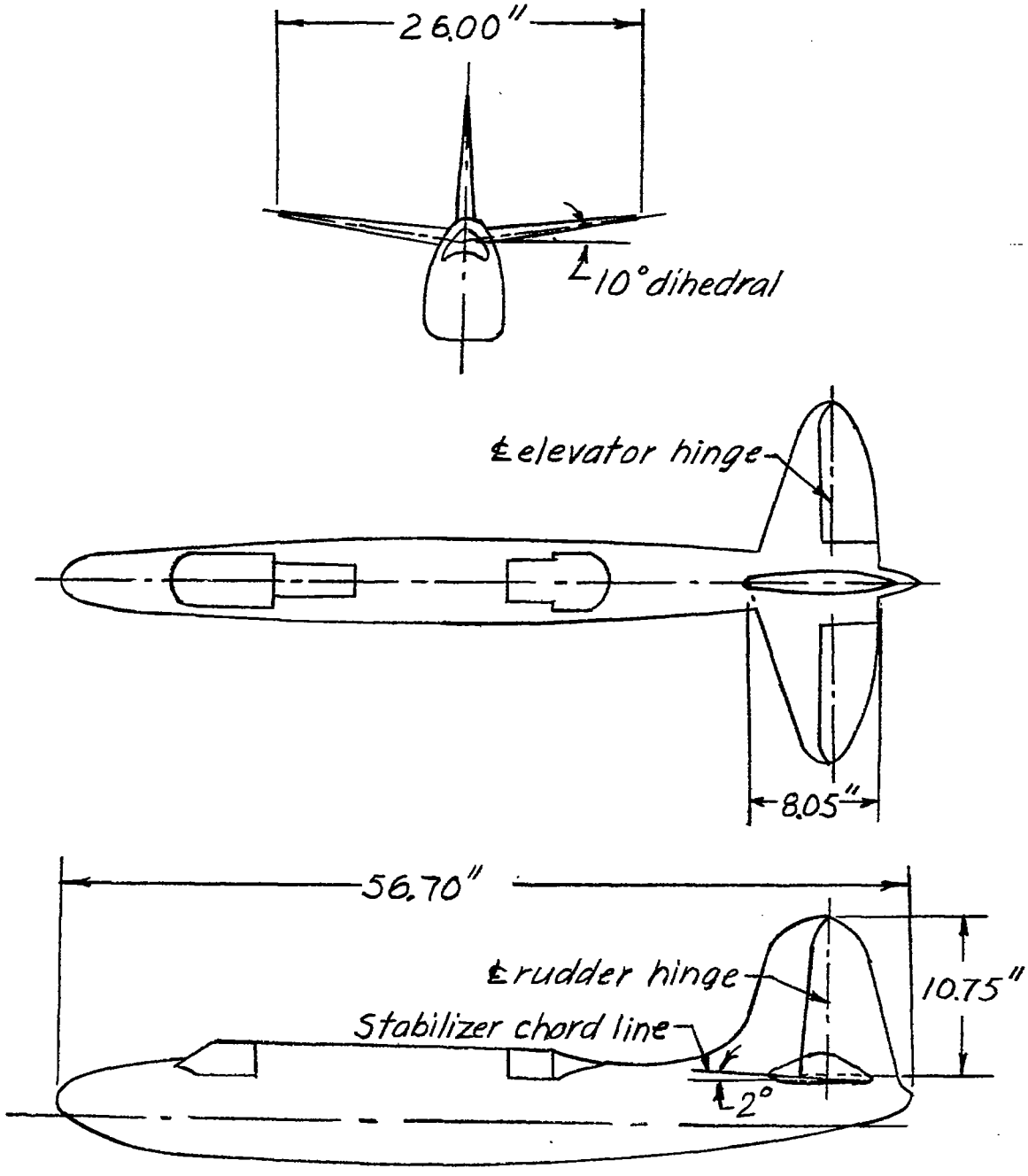

NATIONAL ADVISORY
COMMITTEE FOR AERONAUTICS

Figure 1.- Three-view drawing of model as tested.

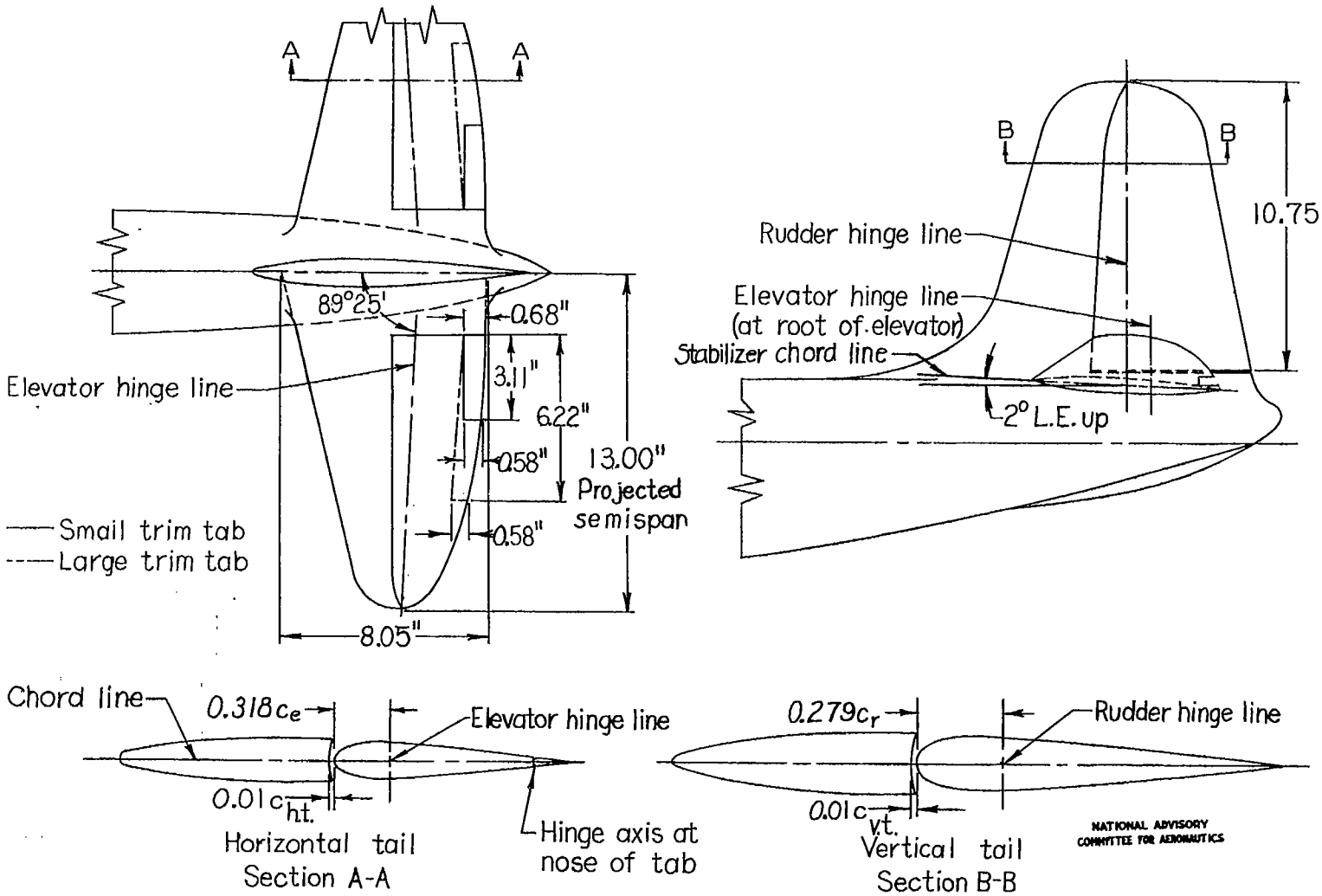

Figure 2.- Tail assembly of model used for tests.

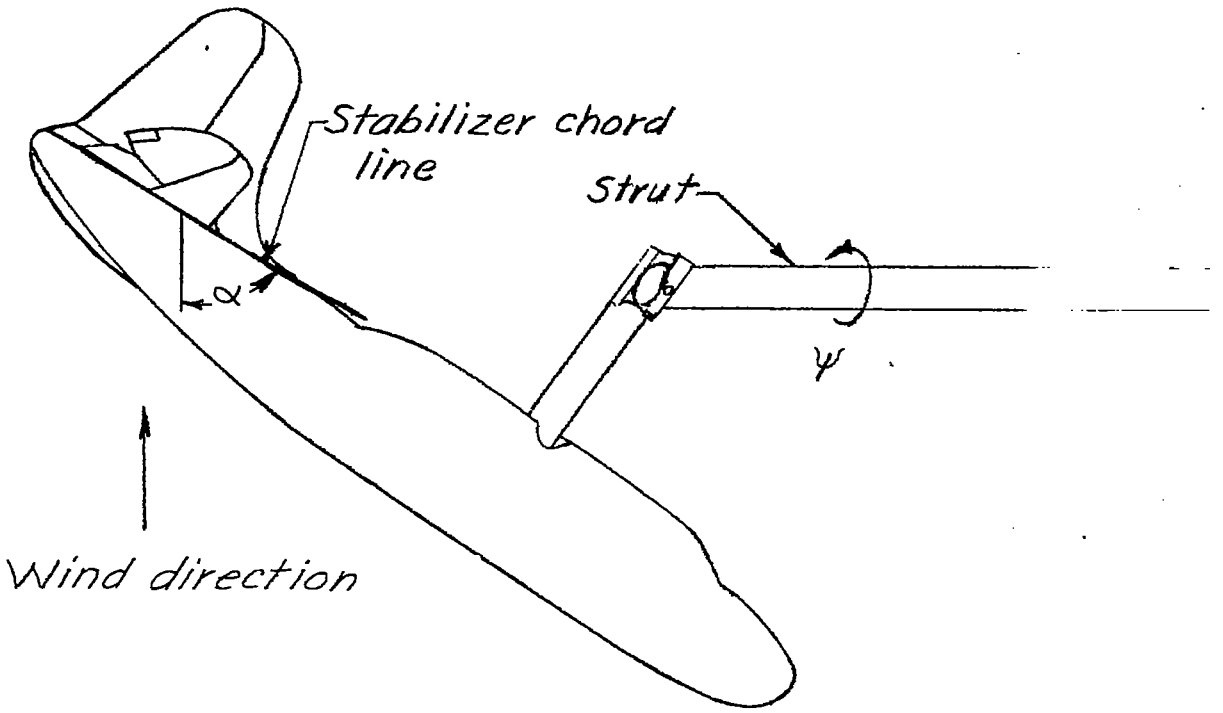

NATIONAL ADVISORY
COMMITTEE FOR AERONAUTICS

Figure 3.- Model mounted in Langley 15-foot free-spinning tunnel in an attitude simulating a spin. Arrows indicate positive values of angles.

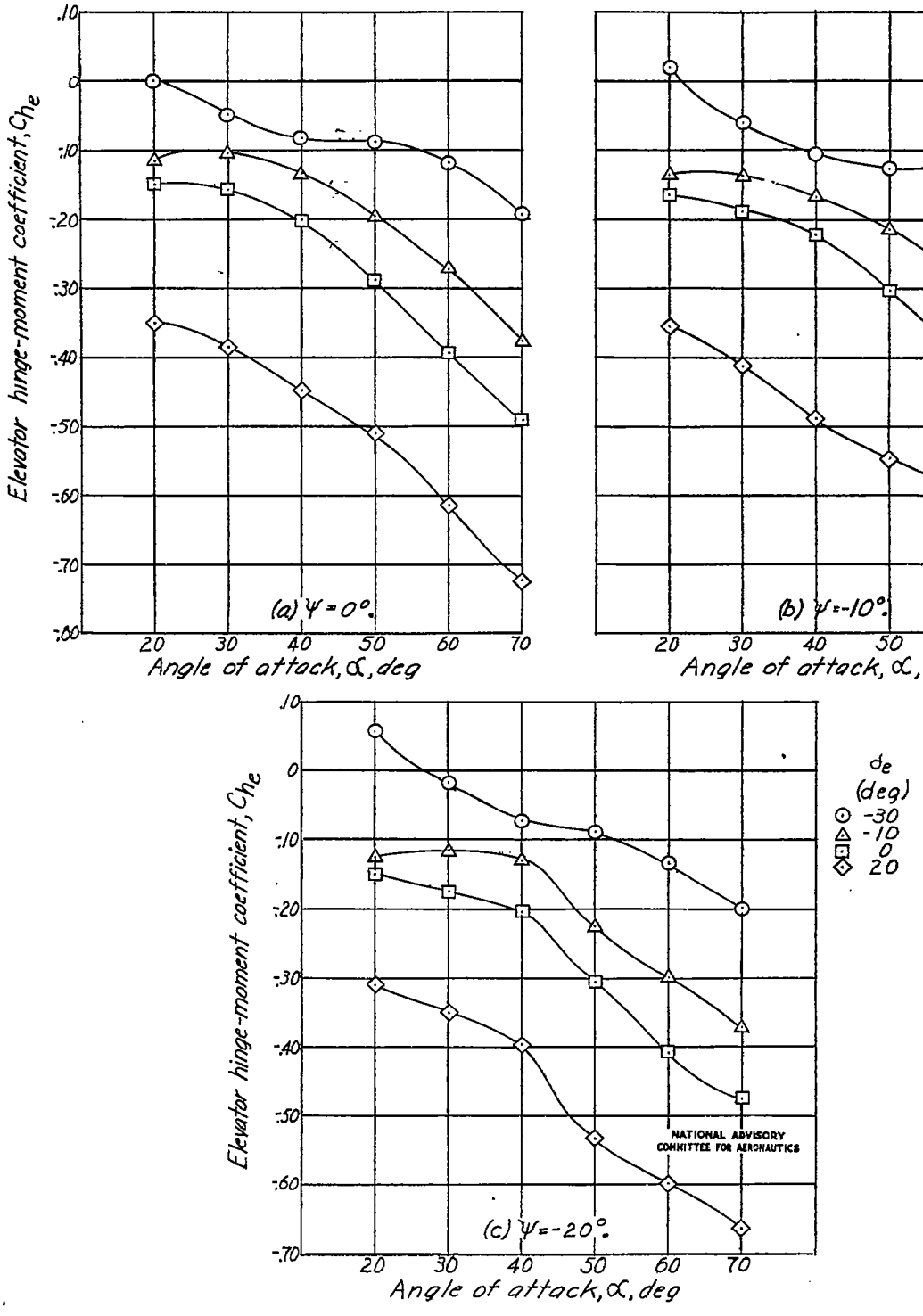

Figure 4.- Elevator hinge-moment coefficient as a function of angle of attack for various angles of yaw and elevator deflections.

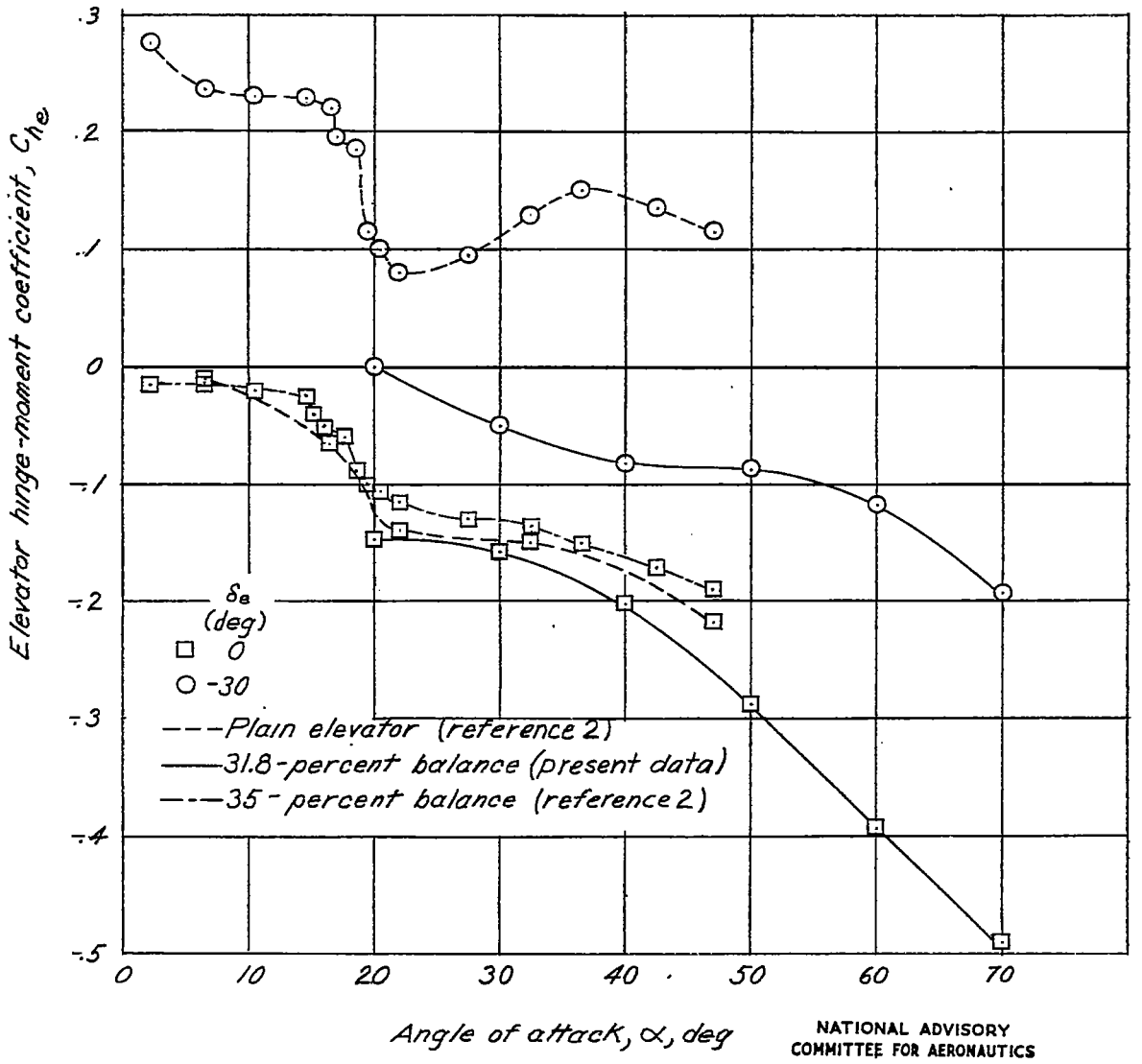

Figure 5.- Comparison of elevator hinge-moment coefficients of balanced and plain elevators in spinning attitudes. $\psi = 0^{\circ}$.

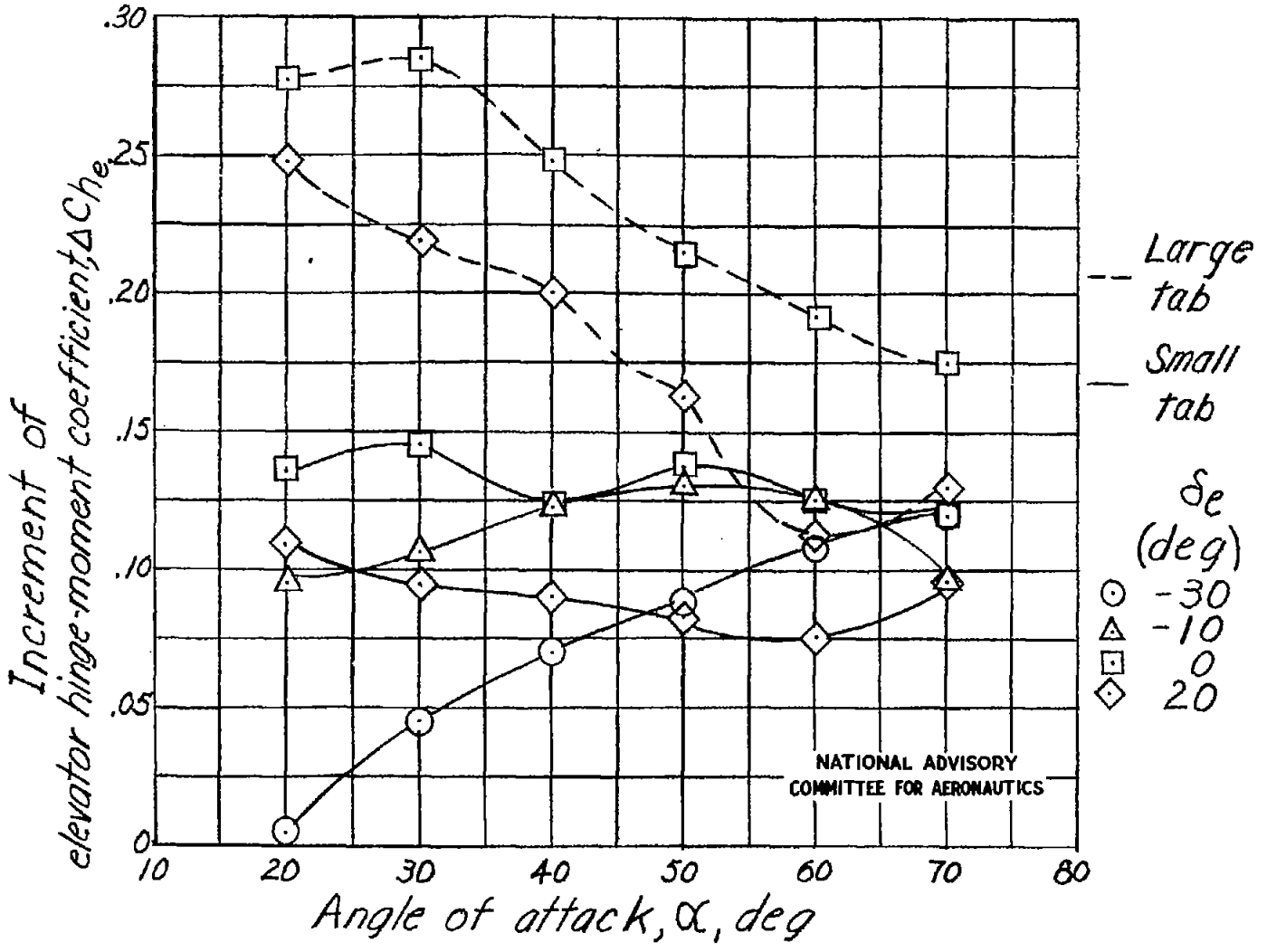

Figure 6.- Increments of elevator hinge-moment coefficient caused by trim-tab deflections from 0° to -14° as functions of angle of attack at various elevator deflections. $\psi = 0^{\circ}$; $\delta_r = 0^{\circ}$.

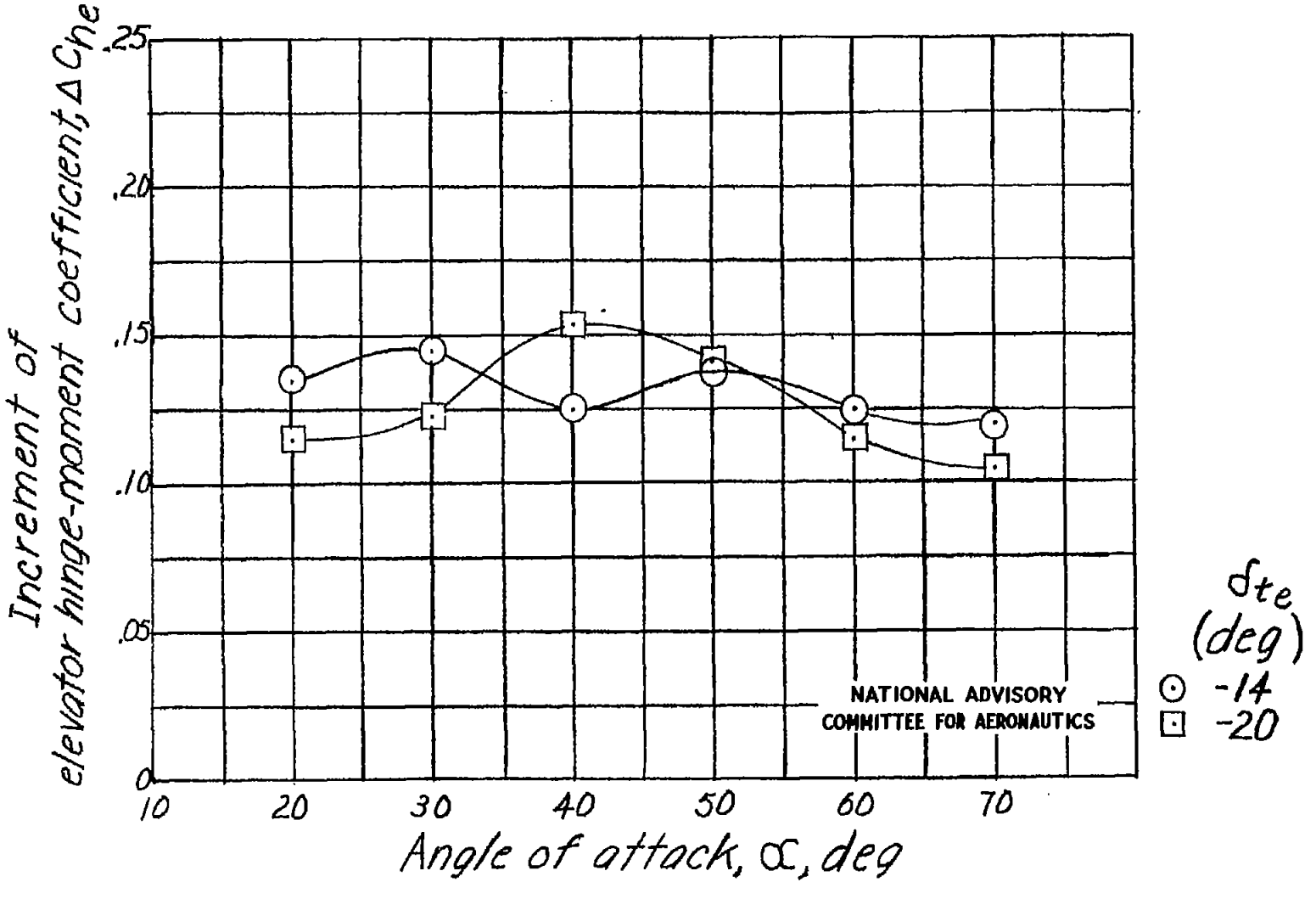

Figure 7.- Increments of elevator hinge-moment coefficient caused by deflection of the small tab from 0° to -14° and from 0° to -20° as functions of angle of attack. $\delta_e = 0^{\circ}$; $\delta_r = 0^{\circ}$; $\psi = 0^{\circ}$.

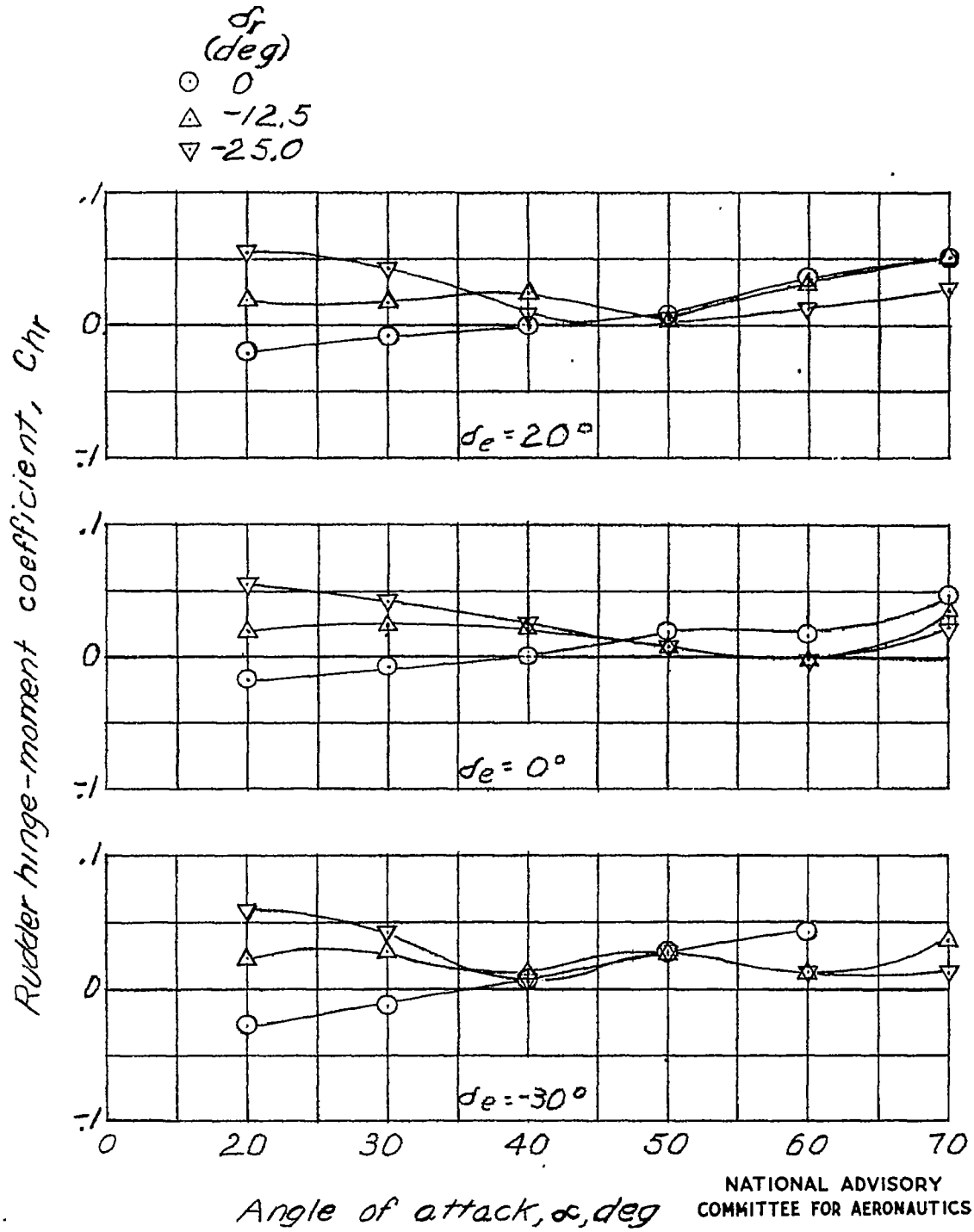

(a) $\psi = 20°$.

Figure 8.- Rudder hinge-moment coefficient as a function of angle of attack for various angles of yaw and rudder deflections.

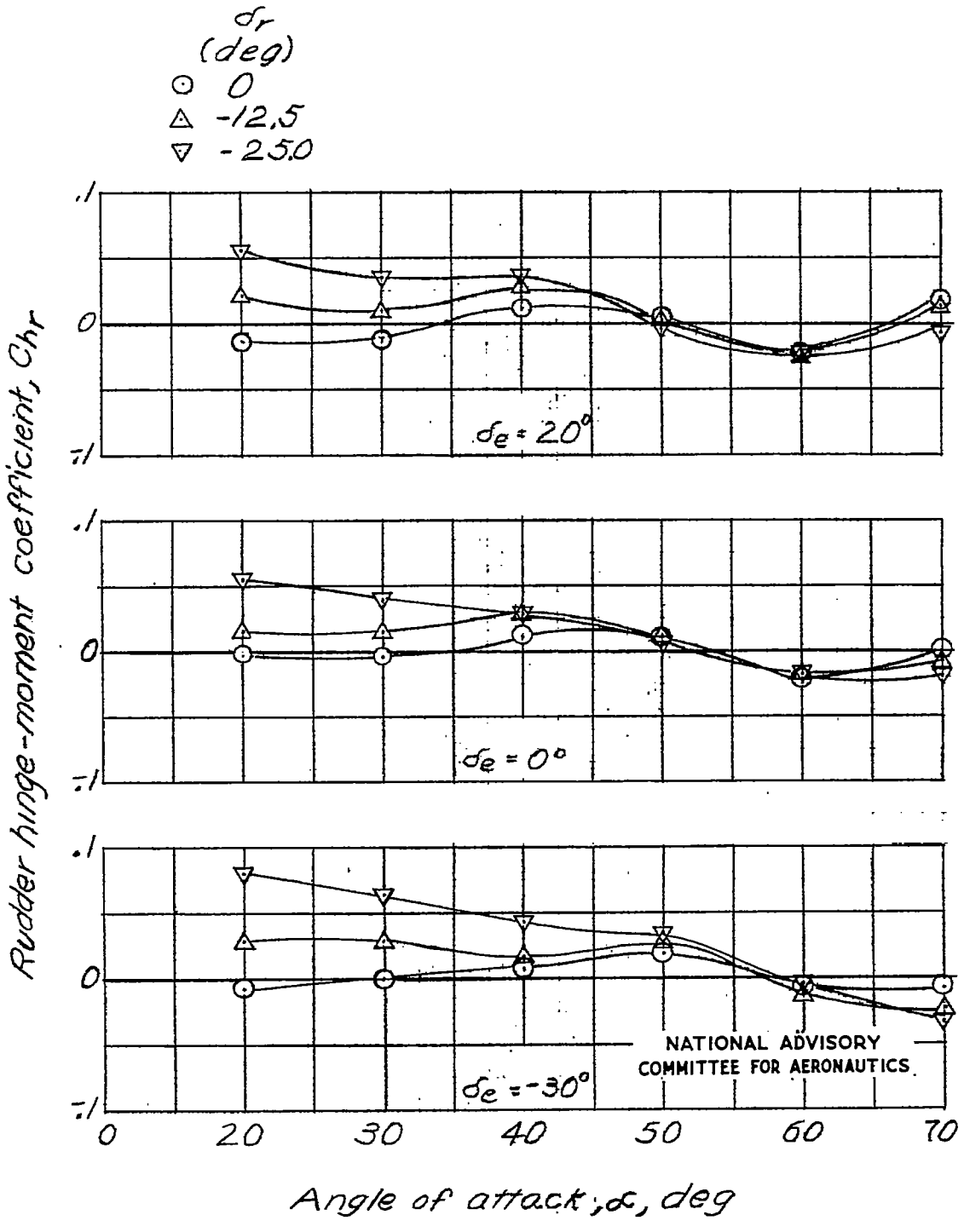

(b) $\psi = 10^{\circ}$.

Figure 8.- Continued.

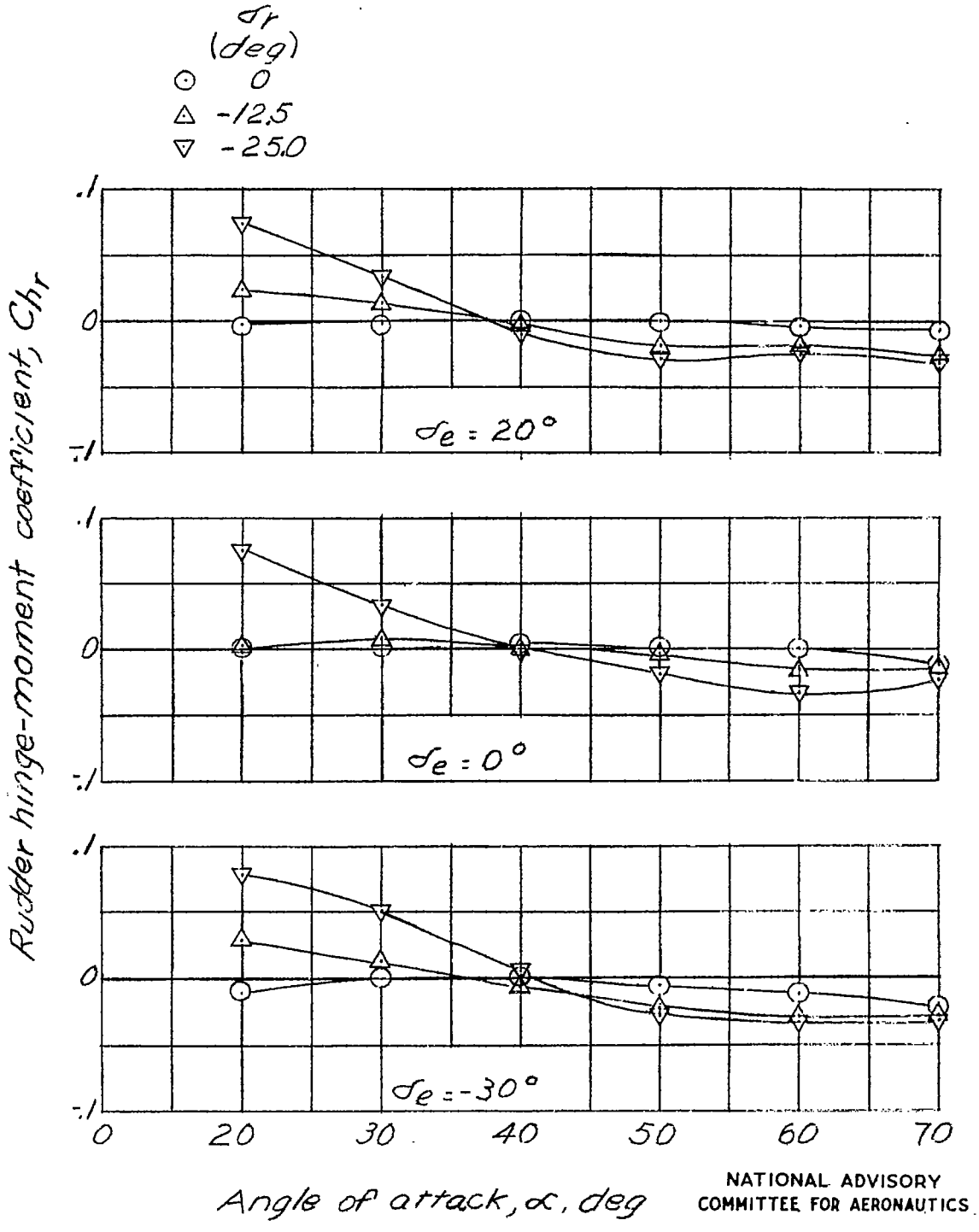

(c) $\psi = 0°$.

Figure 8.- Continued.

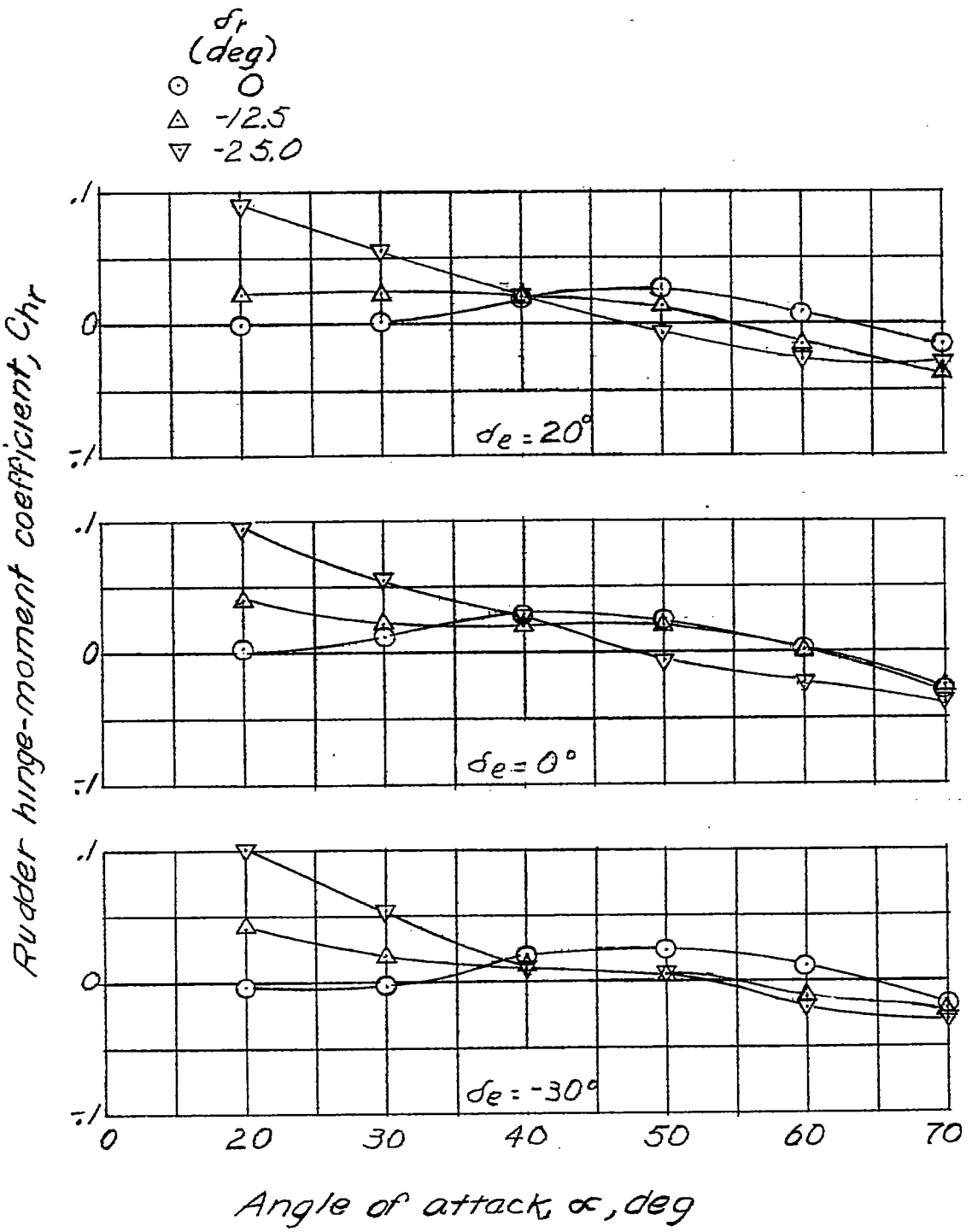

(d) $\psi = -10°$.

NATIONAL ADVISORY COMMITTEE FOR AERONAUTICS

Figure 8.- Continued.

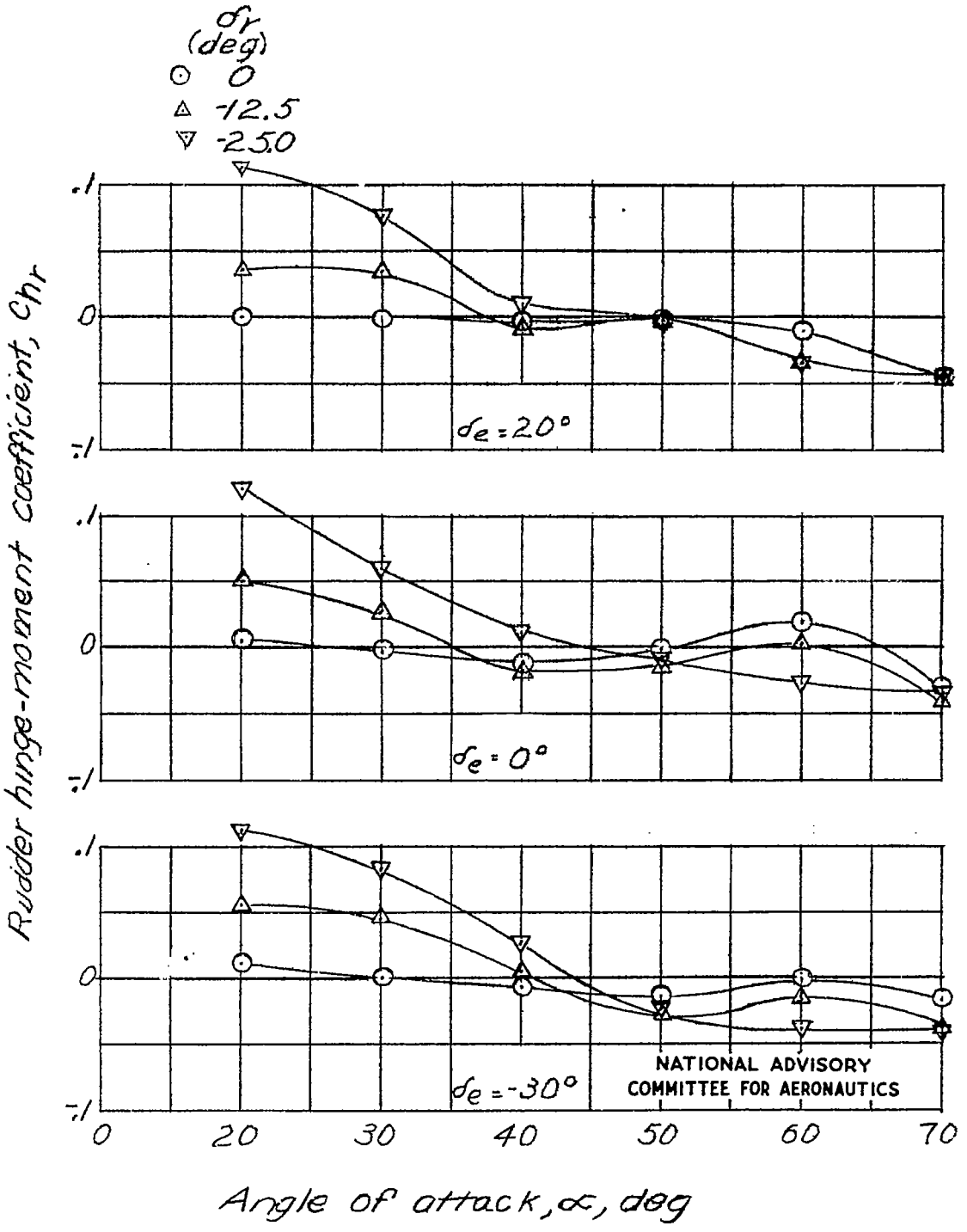

(e) $\psi = -20^{\circ}$.

Figure 8.- Concluded.

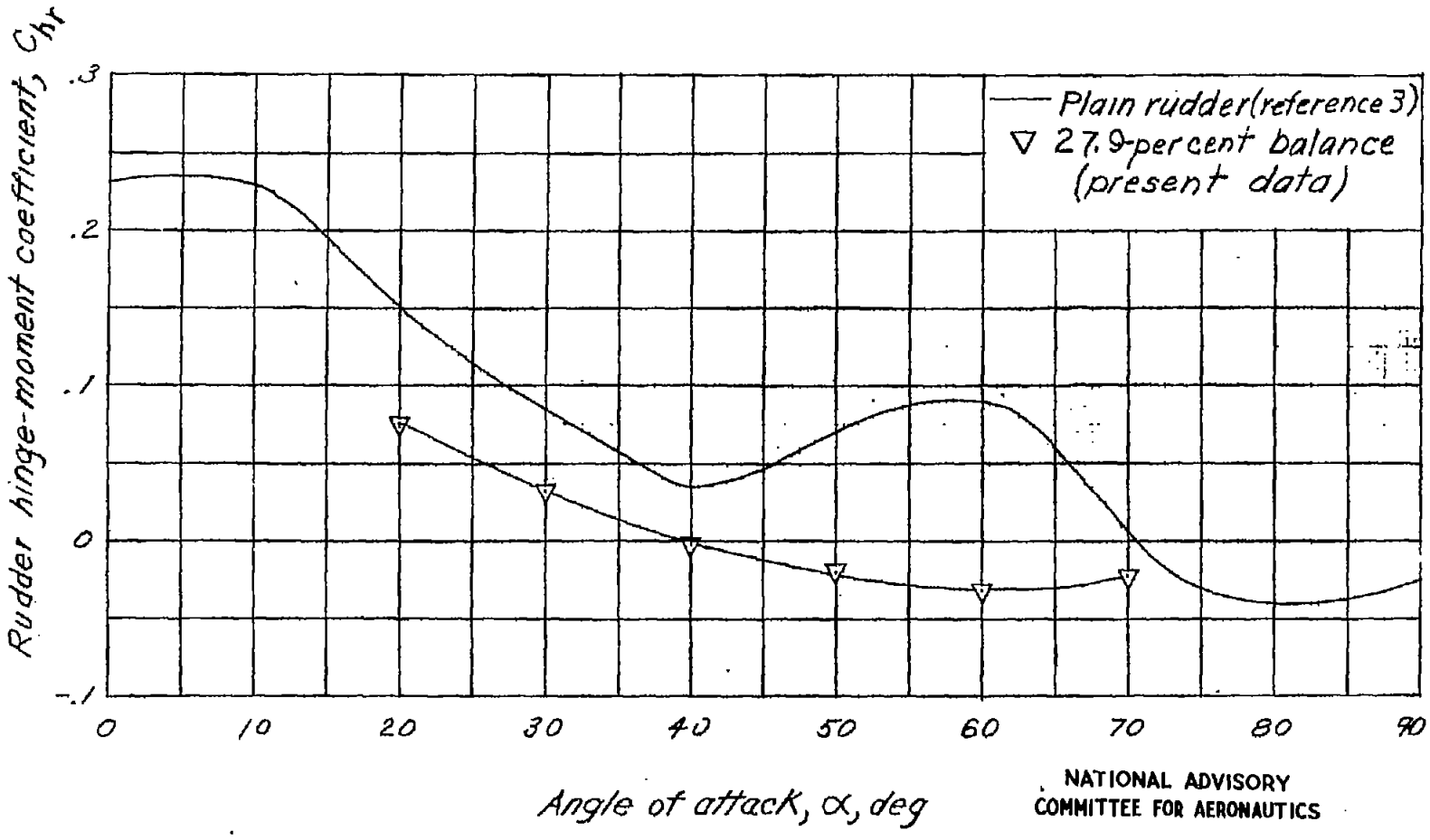

Figure 9.- Comparison of rudder hinge-moment coefficients of balanced and plain rudders in spinning attitudes. $\delta_r = -25^\circ$; $\delta_e = 0^\circ$; $\psi = 0^\circ$.