CASE FILE
COPY

NACA TN No. 1858

NATIONAL ADVISORY COMMITTEE FOR AERONAUTICS

TECHNICAL NOTE

No. 1858

A REVIEW OF ANALYTICAL METHODS FOR THE TREATMENT OF FLOWS WITH DETACHED SHOCKS

By Adolf Busemann

Langley Aeronautical Laboratory
Langley Air Force Base, Va.

PROPERTY FAIRCHILD
ENGINEERING LIBRARY

Washington

April 1949

NATIONAL ADVISORY COMMITTEE FOR AERONAUTICS

TECHNICAL NOTE NO. 1858

A REVIEW OF ANALYTICAL METHODS FOR THE TREATMENT OF FLOWS WITH DETACHED SHOCKS

By Adolf Busemann

SUMMARY

The analytical methods that appear to be best suited to the treatment of two-dimensional flow with detached shock waves are reviewed, and a short discussion of the applications of these methods is given without details or proofs.

INTRODUCTION

The transonic flow theory has been considerably improved in recent years. The problems at subsonic speeds of a moving body concern chiefly the drag and the problems at supersonic speeds, the detached and attached shock waves. Inasmuch as the literature contains some information that is valuable and some other information that is misleading, the purpose of this paper is to discuss those analytical methods and their applications which are regarded as reliable in the transonic range. After these methods are reviewed, a short discussion without details and proofs follows to round out the picture.

SYMBOLS

M	Mach number
u, v	velocity components along x and y axes, respectively
V	velocity
x, y	coordinate axes
$y(x)$	body contour

$$y' = \frac{dy}{dx} = \tan \beta$$

$$y'' = \frac{d^2y}{dx^2}$$

β body angle; deflection angle

γ ratio of specific heats

ϵ shock angle

BASIS OF METHODS

Sharp Deflections

Within the theory of the ideal incompressible fluid nothing is more reliable than the values of the velocities at which the flow passes sharp corners. (See fig. 1.) The velocity V is always zero when the flow passes a concave corner and is infinite when the flow goes around a convex corner. The behavior of a subsonic flow is mainly the same as that of an incompressible flow and, therefore, the zero value of the velocity at concave corners remains the same. Only the fact that the upper limit of the subsonic velocities is finite makes it necessary to surrender the convex corner to the transonic or the supersonic range.

The supersonic stream has a quite different method of passing sharp corners. At limited angles of deflection the supersonic flow turns sharply around the corner without exceeding the normal order of velocities. The angle limitations, however, depend upon the fact that the supersonic velocity range is a limited one, bordering on subsonic speeds or on vacuum. Consequently, a simple supersonic deflection occurs at small angles; the larger angles may belong to the subsonic stream in the case of a concave corner or to the cavitation effects in the case of a convex corner.

The flow around both kinds of corners was treated in 1908 by L. Prandtl and T. Meyer (reference 1), who obtained a unique solution only in the case of the convex corner. As soon as a deflection of the opposite sense occurs or, more precisely, as soon as the angle of a concave corner is given, the number of possible solutions is unfortunately even, there always being two solutions for the smaller angles and no direct solution for the larger angles. Attached or detached shocks are discriminated by the limiting angle and very little additional information is required to settle this alternative. The choice, however, between the two solutions always existing for the smaller angles is more difficult; the one in which the lesser changes in pressure and velocity occur (the so-called weak shock) was supposed to be the only correct solution, but there was no reason to disregard the other solution. The solutions are not always a supersonic and a subsonic solution; near the limiting angle both of them are normally subsonic. Imperfect gases may even have two supersonic solutions. In order to settle the question whether both of the solutions are stable, both of them are shown in the schlieren photographs of figure 2.

Weak or Strong Shocks

In figure 2 the black parts are the shadow of an intake having a tongue with a wedge-shaped tip in the mouth as demonstrated in the third photograph. When the throat of the intake is sufficiently narrow, the flow ahead of the entrance may have a shock wave, some air still passing through the duct. In this kind of flow the tongue moved slowly toward the shock wave. At first, the shock remained almost independent until the wedge came very close to it; then, the shock tried to avoid the wedge moving upstream. This reaction, however, ceased quickly and the wedge reached the shock. In this position only the strong attached shock was obtained. When the wedge was moved farther ahead, the attached shock was consistently the weaker shock. The dissymmetry of the arrangement made it possible to show both solutions in the same photograph on either side of the wedge. These photographs were taken in 1942 from a motion picture dealing with intakes having a central body of revolution for better pressure recovery. Inasmuch as a cone did not clearly show a similar effect - the sudden jump from one of its solutions to the other - as was expected, the two-dimensional wedge in the same circular mouth was tested and led to these convincing results.

The Shock Polar

The original representations of the possible deflections of supersonic streams as they were made by Prandtl and Meyer showed all these features in a satisfactory manner, and it was merely the use of the graphical methods of characteristics which led to another kind of representation - the so-called shock polar. (See fig. 3.) The shock polar connects by a curve all the different velocity vectors in which a given supersonic velocity has the choice to jump in a shock. If a polar diagram for the velocity vectors is used, not only are the value and the angle for the original and the deflected velocities obtained but also the direction of the vector difference connecting the former and the new velocity arrow, which in turn gives the deceleration brought about by the pressure increase. The shock wave front is therefore perpendicular to the vector difference, and the shock polar shows, at the same time, the angle of deflection β and the angle of the oblique shock ϵ.

The shock polar for perfect gases is one family of curves depending upon only one parameter, as is represented in figure 4. The numbers at the different curves indicate the Mach number M, and the scale at the axis on the left of the circle indicates the location of the velocity pole, the center of the polar diagram depending on the ratio of the specific heats γ. This diagram shows that the maximum deflection changes with the ratio of specific heats at a given Mach number in that smaller γ corresponds to higher deflections and vice versa.

The whole family of curves has a very simple rule of construction. Choosing one point on the circle with the radius r and connecting this point with all the other points of this same circle provide a system of vectors ending at the circle. Now it is only necessary to reduce all the vectors by removing sections that have the constant projection (not the constant length) $\frac{2r}{M^2}$ in order that the reduced vectors end on the member of the family corresponding to the Mach number M. The pole distance for a given ratio of the specific heats γ is just γr from the center of the circle. This graphical representation, even though its accuracy may not be sufficient for all purposes, shows almost instantly the solutions of oblique-shock-wave problems.

A blunt body in two-dimensional flow has a detached front wave (fig. 5) which contains the different points of one particular shock polar, as the free-stream velocity remains undisturbed ahead of the shock wave; thus, the different points of the shock polar representing at first only independent possibilities now are continuously connected with their neighboring points. The successive streamlines of the flow pattern change their states in passing through the bow wave according to successive points of the shock polar. Bow waves of different bodies at the same Mach number differ in shape, but corresponding points of the shock polar have the same deflection of the streamline and the same direction of the front wave; the first unequal feature is the difference in the radii of curvature. On the other hand, it is known that a difference in scale of the body leads to a similar flow pattern. The result is, therefore, that the similarity of the local flow pattern behind a shock wave at regular points in two-dimensional flow covers one more successive point on every streamline, which predicts the changes in pressure and direction along the streamline. When this information is plotted in the velocity diagram, the initial directions of the streamline at every point of the shock polar are given independently of the special shape of the body. These initial directions make the shock polars more useful. The polar including the initial directions of the streamlines, the so-called "hedgehog" or "porcupine" (fig. 6), represents the complete boundary conditions along the front wave; this information is very valuable, especially in solving the whole problem in the velocity plane. The differential equation of the flow is linear in the velocity plane. When the shape of the body can also be transferred to the velocity plane before the problem is completely solved, the whole situation is simplified. In the other cases the plotting in the velocity plane reverses the boundary conditions; this reversal makes the front wave fixed and the body shape undetermined instead of the normal aspect in the physical plane of the flow, where the body is fixed and the front wave undetermined. When the linearized differential equation that is gained is considered, the exchange of the fixed and the loose boundary condition may be a valuable asset.

Before the development of the detached shock problem is further considered, a few other things should be mentioned - first of all, the investigators who used these ideas in former times. L. Crocco (reference 2) made the first real computations of the flow pattern behind a shock wave by means of his so-called "new stream function." He especially pointed out the connection between streamline and shock curvature and the fact that there is a special point on the front wave or the shock polar at which the streamline has no curvature, even when the shock wave has a finite curvature. The "Crocco point" in the velocity diagram has the radial "spine" of the hedgehog - that is, an expansion without a change in the direction of the velocity. This point is situated between the maximum deflection and the sonic state behind the shock. Perfect gases, therefore, have the Crocco point always at subsonic conditions. This point will be seen to be of a special significance.

A real application of the whole hedgehog idea was made by F. Frankl (reference 3) in 1944, and in this paper he proved the uniqueness of the detached-shock-wave problem when a contour of the body is arbitrarily given in the velocity plane. This application is mentioned again subsequently.

The Entrance Corner of the Supersonic Portion

One more clue is needed in order to solve a problem in which the boundary conditions can be plotted in advance in the velocity or hodograph plane. This clue is offered by the transonic theory which deals with the behavior of the flow near the entrance and exit corners of a mixed subsonic stream. (See reference 4.) In a genuine potential stream, the sonic portion can only border a convex contour of the body. Without a convenient convex contour, only its entrance corner is free of singularities and requires, therefore, a convex bordering streamline. The exit of the supersonic portion contains one shock wave or a series of shock waves and does not require a special shape of the body for its existence. In figure 7 a genuine potential stream containing a supersonic portion is represented. Here the characteristics or Mach lines within the supersonic portion that is bounded by the sonic line necessarily represent expansions in the family arriving at the sonic line and necessarily represent compressions starting at the sonic line. This phenomenon causes continuous pressure changes of both signs but streamline deflections always in the same direction fitting only a convex body. On the other hand, the restriction of nothing but expansions in one family and nothing but compressions in the other family cuts the general choice - both possibilities in both families - down to one-quarter, and this reduction may be regarded as the reason for the rarity of genuine mixed streams without shock waves. The exit corner is normally disturbed by resulting shock waves in order to satisfy the boundary conditions along the entire body contour. More important in the present problem, however, is the fact that the entrance corner to the supersonic portion must be smooth and, therefore, can only border a convex streamline of the body.

It should be emphasized that, generally, the conditions that result if the presence of shock waves in the stream is tolerated can easily be satisfied. The particular condition that a body in a parallel stream has to have at least some convex parts of the contour to let the stream enter the supersonic regime is almost a triviality. There is a great variety of bodies having nothing but convex curvature, whereas a body without any convex part is impossible. As the following applications use bodies having sharp corners, it is perhaps necessary to say that sharp convex corners belong to the convex parts of the contour according to their total angle of deflection. Only in this sense the statement holds - that the two-dimensional contour of a solid body is predominantly convex.

The transonic result, that the entrance to a supersonic region requires a convex contour, and the subsonic result, that a sharp convex corner of a body necessarily makes the velocities exceed the subsonic range, lead to one of the most reliable facts for the flow around polygons. The subsonic stream is not able to pass the slightest angle of a sharp convex deflection and the supersonic regime cannot be entered without the help of the convex at the corner; therefore, the only possibility is that the sonic line starts at the corner and is followed by a Prandtl-Meyer flow around the corner. (See fig. 8.) The direction of the sonic line is, according to the Prandtl-Meyer corner, at first perpendicular to the last subsonic streamline and then bent around the corner (in agreement with J. W. Maccoll's assumption in reference 5). The compression waves starting at the sonic line lead to a shock-wave pattern as there is no other way left to make them stop.

APPLICATIONS

The Finite Wedge

Hodograph treatment.- With this information about the transonic flow there is a special case which can be solved in the velocity plane: the symmetrical wedge of finite length. The wedge of infinite length leads only to the attached shocks; if the wedge angle is too large to permit attachment, the whole plane in front of the wedge is a stagnation region. The finite wedge may end at a certain distance from the tip with a sharp convex angle sufficiently large to prevent the following part of the body from interfering with the mixed-flow pattern. This knowledge of only the shape determines the boundary conditions along the wedge in the velocity plane without any special information about the velocity distribution. - The stagnation point at the nose and the sonic velocity at the end of the sides followed by a deflection around the corner provide sufficient knowledge to permit a straight line to be drawn from the origin of the velocity plane to the sonic line in the direction of the wedge angle and to continue this line by the characteristic which originates there.

(See fig. 9.) Thus, both the body and the shock wave are given boundaries in the velocity plane, and the problem is to find a solution of the streamline pattern satisfying the differential equation and the boundary conditions.

The differential equation of the stream function can be written with velocity components as the independent variables even in the case of entropy differences, since the streamlines carry constant values of entropy as soon as they leave the shock wave. The changes brought about by these different values of entropy, however, are small for transonic problems and a good and well-established simplification is to use the potential stream instead. This usage gives the advantage of a linear differential equation, which was a great help to F. Tricomi (reference 6) and F. Frankl (reference 3) in proving the uniqueness of the solutions in a region between the subsonic part of the shock polar and of the bounding streamline and two supersonic characteristics, one of them serving as the supersonic part of the bounding streamline.

The steady transit from attached to detached shocks.- G. Guderley (reference 7) made a contribution to the problem of detached and attached shocks by showing the transit between both extremes. The results are given in figure 10. He shows that the change of flow types is made in a series of very small steps.

The pure supersonic flow past the wedge leads definitely to a shock wave which is straight up to the point where the first characteristic starting from the end reaches the shock. (See fig. 10, case 1.) The shock wave consists of a straight line and a following curved part.

At a larger wedge angle (or at lower Mach number) the flow behind the attached shock becomes subsonic and must therefore be accelerated to arrive at sonic speed just at the end of the wedge. The whole attached shock will therefore be curved right from the beginning. It is possible, however, to show exactly that the curvature changes from increasing to decreasing values as the angle of the wedge approaches the maximum angle for attached shocks. The most important point is the Crocco point where the initial direction of the streamline is radial and thus, for the wedge, is parallel to the bounding streamline (see fig. 10, case 3 or C). This particular wedge angle is the only case that is not singular. At smaller angles of the wedge the following contradiction of the boundary conditions is obtained: The body contour representing a streamline is radial throughout the subsonic range and the spines of the shock polar giving the initial direction of streamlines prescribe an inwardly directed beginning even at the intersection with the body contour. This overdetermination, of course, occurs at only one point, the intersection point, and causes a singularity there. The type of the singularity depends on the differential equation which throughout the subsonic range of the velocity plane is locally that of incompressible flow. A singularity which deflects a streamline suddenly to a more outward direction, therefore, corresponds to the incompressible convex corner of figure 1. The infinite value of the velocity in that diagram, expressed

as a characteristic feature of the streamline pattern, means that the corner is a point where the streamlines are crowded. Wherever the streamlines crowd in the velocity plane (see fig. 10, case 2), the real flow in the physical plane will have an appreciable area, indicated by the number of streamlines, where the velocity is almost uniform. This condition occurs at the tip of the wedge when the flow changes from the supersonic, where the velocity behind the shock is parallel, and enters the subsonic range by enlarging the wedge angle. The velocity near the tip of the wedge still remains almost uniform.

When the growing wedge angle goes beyond Crocco's point, the direction of the spines at the intersection changes from inward to outward bound and the corresponding singularity, from a convex corner to a concave corner which is avoided by the streamlines. (See fig. 1.) The change of velocity near the tip of the wedge is therefore rapid (fig. 10, case 4) and only the flow with Crocco's point as the intersection point has a normal acceleration and therefore a regular bow wave with finite curvature throughout.

These features belong to the wedge with flat sides. It may help to clarify the case of the wedge with flat sides by considering briefly the case of the wedge with convex sides (two-dimensional ogival). In this case the supersonic stream already shows a continuous acceleration behind the shock and the curvature of the shock is finite at the tip. At subsonic velocities behind the shock the convex curvature of the sides causes no difficulty at the intersection so long as the spines are only inward bound. The convex sides therefore do not join the singular character of the flow of the flat wedge before Crocco's point is passed. This sudden termination of the nondegenerate flow past a convex body with a sharp leading edge before the maximum angle of deflection is reached was a result that puzzled Crocco in 1937. After this historical digression, the case of the wedge with flat sides should again be considered.

The flow past the wedge continuously changes from the pure supersonic flow in which the bow wave definitely starts with a straight part of finite length to the mixed flow in which the bow wave must be bent everywhere in the following manner: The curvature in figure 10, case 2 is zero at the tip and increases; in case 3, at Crocco's point, the curvature of the bow wave is homogeneous; and in case 4 it starts with infinite values and decreases. Thus, the point of maximum curvature shifts toward the tip before the detached shocks must occur. The next step may appear as a sophism, namely, to demonstrate that even the transit from attached shocks to detached shocks is a continuous one. Indeed, as soon as the intersection between the given bounding streamline and the shock polar disappears on account of the increasing wedge angle (or decreasing Mach number), the area of the hodograph looks quite different; it may be enlarged suddenly by an enormous factor. The only thing that matters, however, is the velocity distribution in the physical plane around the wedge, and this distribution depends upon the number of streamlines that use the new area. It has been demonstrated that, before the shock detaches,

the intersection point is already avoided by the streamlines and this tendency is increasing because, toward the last possible intersection, not only the angle of the spines moves farther outward but also the direction of the shock polar where these different directions are prescribed comes closer to the radial wedge contour. This state may also be approached from the other side, the open channel between shock polar and wedge contour (fig. 10, case 5). Being in the subsonic part of the hodograph where the differential equation of the stream function is locally like that of an incompressible flow, the channel may be treated as though it contained an incompressible flow. The boundary condition is a closed wall at one side and a cascade of blades at the opposite wall represented by the spines of the shock polar. The flow turns out to be increasing in discharge exponentially. The discharge ratio between inlet and outlet of this narrow part depends exponentially on the length-width ratio of the channel. As this ratio goes to infinity when the sides of the channel touch each other, the number of streamlines passing the lower speed range drops quickly to zero. Such a tendency means that the detached bow wave is still strongly bent near the tip of the wedge and that the pressure distribution around the wedge jumps to higher values in so small a region that drag, lift, and moments are changing continuously or, to put it more accurately, that these forces have a finite first derivative with respect to wedge angle or Mach number.

This result may surprise even the practical aerodynamicist and shows how badly sometimes those things are feared which cannot be seen in their details. The more surprising fact is, perhaps, that not even a single line of computation was required to achieve this result. Putting the problem in its best coordinates and realizing the singularities of the solutions accomplished the objective.

The Body of Arbitrary Shape

The body of arbitrary shape may be represented by an arbitrary streamline in the hodograph. (See fig. 11.) The lack of uniqueness of any problem caused by using two separate outlets to the supersonic range on either side of the shock polar disappears as the body contour must pass the center of the velocity plane, and there has to be a branch point of the streamline representing the stagnation point of the body. Symmetrical flows satisfy this condition always by symmetry. As soon as the stagnation point is settled in this way, it has been proved - at least for Mach numbers below 2 at any point used - that the solution satisfying the given boundary conditions and the differential equation in the hodograph is unique. As the real problem in the physical plane is known as unique by experiments, the fact that the body contour has to be assumed first and cannot be checked before the solution obtained by using the assumed contour is computed should not be regarded as another source of difficulty. This opinion has very strong support because experience has shown that the solutions are almost everywhere as little sensitive to changes in the boundary conditions as in an incompressible flow.

It may be helpful at this point to digress in order to justify this reasoning by an objective procedure. An electrical analogy for the problem demonstrates the manner in which general solutions can be found. The electrical hodograph of G. Kron of the General Electric Co. (reference 8) representing the differential equation for compressible gases, as exact as a network of finite meshes allows, gives the solution if it is adapted to adequate boundary conditions. The electrical analogy uses reactances instead of the simpler resistances for a given frequency of the alternating current to cover the supersonic and the subsonic part of the hodograph. The supersonic part requires a change in sign which can be obtained by taking capacitances instead of inductances. For the problem of detached shocks, the power supply along the shock polar requires electronic tubes furnishing currents proportional to the potential gradients along the polar. Figure 12 gives an idea of this arrangement. The points 1, 2, . . . of power supply and shock polar (subsonic part is sufficient) have to be connected. The other end of the power supply 0 can be connected with any supersonic point outside the triangle between the body contour and the last characteristic connecting the subsonic region directly with the body contour. A point not too close to this characteristic helps, of course, to overcome the troubles caused by the finite meshes of the net. The body contour is represented by disconnecting the outer part of the hodograph plane from the inner part along the contour. The quality of the characteristics of separating regions is due to the fact that points connected by a capacitance and an inductance in series can have vanishing reactance, which means that the electric current does not produce an electric potential difference between these points.

DISCUSSION

For the rest of this paper attention will be directed to the general problem of detached shocks, details and proofs being avoided since they would require more insight in the methods used than the preceding sections. Particular attention will be given to the practical case, the slender profile in the transonic speed range. In this range the shock polar is small (baby hedgehogs), and the body contour connects hodograph points representing small velocity angles over most of the contour. The result is a narrow strip from the origin of the velocity plane to the supersonic region containing the small shock polar as the only source of streamlines. The lower subsonic area is therefore a long narrow bag with almost stagnation conditions of the streamline pattern. Areas containing more crowded streamlines are near or above that subsonic Mach number to which the normal shock jumps (that is almost the reciprocal value of the free-stream Mach number).

If the case of slender profiles near Mach number 1 is chosen as the starting point because for this case the detached shock is completely unavoidable, the detached-shock-wave problem has the following aspect: The profile does not everywhere contribute equally to the shape of the shock wave; especially the shape of the nose is relatively unimportant even when the distance between body and shock is smaller there than at other points. The shape of the subsonic part in front of the body is stabilized by the accumulation of masses which enlarges this region until the outlet sections on both sides of the body become sufficiently wide. The region of accumulation corresponds to the bag in the hodograph plane at small velocities. The bottleneck at the outlet around the shock polar corresponds to the "shoulders" of the profile where the streamlines of the physical plane finally get through.

An easy way to find the most important parts of profiles at different angles of attack and at different Mach numbers is to put an acute-angle protractor adjusted to twice the maximum angle of deflection for the given Mach number over the front of the profile. (See fig. 13.) The touching arcs on both sides are those shoulders which represent the bottleneck of the stream. Their relative positions and their curvatures fix the principal shape of the bow wave relative to them. (The curvature corresponding to the transonic similarity gets the invarient form $yy''/(y')^2$ rather than y''.) The distance between shock and nose is an irrelevant length given by the relative position of the nose connected with the shoulders and the bow wave produced by the shoulders. An appreciable interaction between the nose itself and the shape of the bow wave occurs only when this irrelevant distance turns out to be near zero or negative (compare the strong shock in fig. 2). The normal case is one with a negligible effect of the nose, and the shape of the bow wave is determined entirely by the shoulders of the body.

The proposed use of the protractor is not just the result of the pure theory; it may not satisfy in every aspect but it places the emphasis on the actually interesting points better than anything previously proposed. It is devised especially to show a means for getting rid of the irrelevant nose distance which is misleading in the analysis of wind-tunnel results on different shapes at different Mach numbers. There is no doubt about the fact that schlieren photographs or interferograms taken from wind-tunnel tests at supersonic speeds are able to furnish the practical quantities and the theoretical solutions more easily and correctly than even G. Kron's electrical analogy. They can solve the three-dimensional problem too. The use of the two-dimensional and axisymmetrical transonic similarity corresponds to such a scientific approach.

One thing that is always puzzling at transonic bottlenecks appears clearly in figure 13 - namely, that those parts which definitely are important for the passage turn out to be situated completely in the purely

supersonic range where the body contour is known to be more or less arbitrary. The sonic line and the last characteristic which leads back to the subsonic range are ahead of the points of contact of the protractor. It is obvious, however, that the body slope must decrease to smaller angles than that of the maximum deflection to be sure of a closed subsonic portion behind the shock.

The analogous situation at the Laval nozzle, the simplest transonic bottleneck, may help to make clear this somewhat involved problem. Figure 14 shows that the two-dimensional Laval nozzle with curved walls throughout also has its sonic line and its last sensitive characteristic ahead of the minimum section. The arbitrary part of the shape starts before the minimum section is reached and still has an inwardly directed tangent. It is not necessary to explain that here a certain minimum of convexity at the walls is required to prevent interference with the settled part of the subsonic flow and to be free of a second subsonic portion behind a shock wave. The compression waves which always start at the sonic line require such attention. For this reason, the unavoidable compression lines are drawn in figure 13 also. Considerations of this type are used to propose the maximum angle of deflection as the simplest and most reliable determination of the body shoulders.

CONCLUDING REMARKS

The present paper reviews the analytical methods for the treatment of two-dimensional flow with detached shock waves. The emphasis is placed on the supersonic speed range close to Mach number 1.0 where the detached shock waves cannot be avoided but where, on the other hand, the deviations of the potential flow are negligible. The simplifications brought about by the two-dimensional potential flow are very desirable with respect to a rigorous combination of the elliptical and hyperbolical flow character in the subsonic and supersonic regions. With the results obtained in this way it is easy to see that the connection between body shape and shock-wave shape is far from a simple analytical one which can be represented by a few terms of a power-series development. Between two very sensitive arcs of the body front is the nose of the body with an unimportant contribution to the shock-wave shape. This situation is a significant detail of the transonic problem of detached shock waves and should be considered in choosing an appropriate method of approach.

Langley Aeronautical Laboratory
National Advisory Committee for Aeronautics
Langley Air Force Base, Va., February 1, 1949

REFERENCES

1. Meyer, Th.: Über zweidimensionale Bewegungsvorgänge in einem Gas, das mit Überschallgeschwindigkeit strömt. Forsch.-Arb. Geb. Ing.-Wes., VDI-Verlag G.m.b.H. (Berlin), Heft 62, 1908, pp. 31-67.

2. Crocco, Luigi: Singolarità della corrente gassosa iperacustica nell'intorno di una prora a diedro. L'Aerotecnica, vol. XVII, fasc. 6, June 1937, pp. 519-534.

3. Frankl, F.: On the Problems of Chaplygin for Mixed Sub- and Supersonic Flows. NACA TM No. 1155, 1947.

4. Busemann, A., and Guderley, G.: The Problem of Drag at High Subsonic Speeds. Reps. and Translations No. 184, British M.O.S.(A) Völkenrode, March 1947.

5. Maccoll, J. W.: Investigations of Compressible Flow at Sonic Speeds. Theoretical Res. Rep. No. 7/46, Armament Res. Dept., British Ministry of Supply, Sept. 1946.

6. Tricomi, Francesco: Sulle equazioni lineari alle derivate parziali di 2° ordine, di tipo misto. R. Accad. Naz. dei Lincei, Mem. della Cl. Sci. Fis., Mat. e Nat., vol. XIV, ser. 5a, 1923, pp. 134-247. (Available as Translation No. A9-T-26, Brown Univ., 1948.) Ancora sull'equazione $y\frac{\partial^2 z}{\partial x^2} + \frac{\partial^2 z}{\partial y^2} = 0$. Rend. R. Accad. Naz. dei Lincei, vol. VI, ser. 6, 1927, pp. 567-571. Ulteriori ricerche sull'equazione $y\frac{\partial^2 z}{\partial x^2} + \frac{\partial^2 z}{\partial y^2} = 0$. Rend. del Circolo Matematico di Palermo, vol. LII, no. 1, Jan.-April, 1928, pp. 63-90.

7. Guderley, Gottfried: Considerations of the Structure of Mixed Subsonic-Supersonic Flow Patterns. Tech. Rep. No. F-TR-2168-ND, Air Materiel Command (Wright Field), Oct. 1947.

8. Kron, Gabriel: Equivalent Circuits of Compressible and Incompressible Fluid Flow Fields. Jour. Aero. Sci., vol. 12, no. 2, April 1945, pp. 221-231.

Page intentionally left blank

Page intentionally left blank

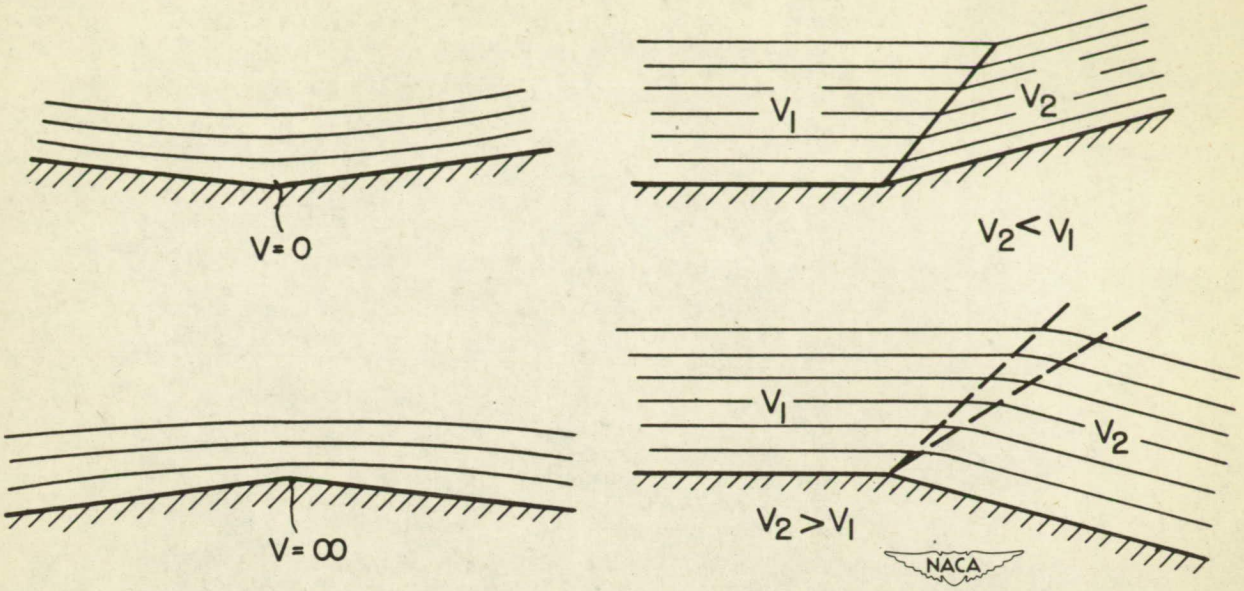

(a) Incompressible. (b) Supersonic.

Figure 1.– Flow at corners.

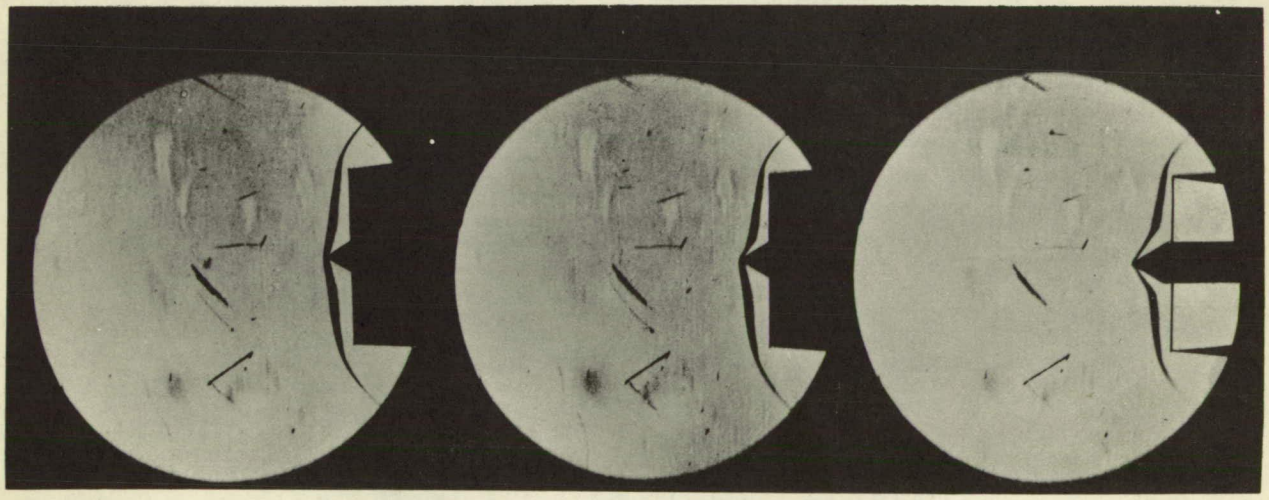

Figure 2.– Weak and strong shocks on a wedge.

Page intentionally left blank

Page intentionally left blank

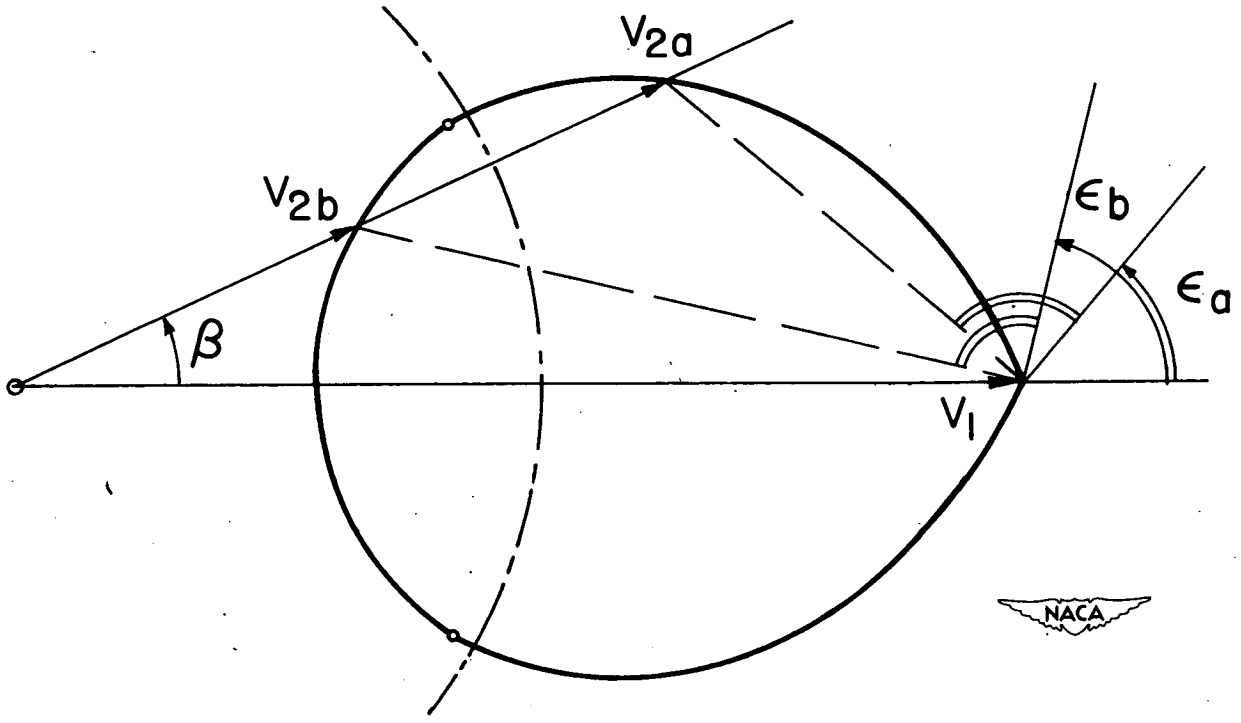

Figure 3.– Diagram of shock polar. (Subscripts: a, weak shock; b, strong shock.)

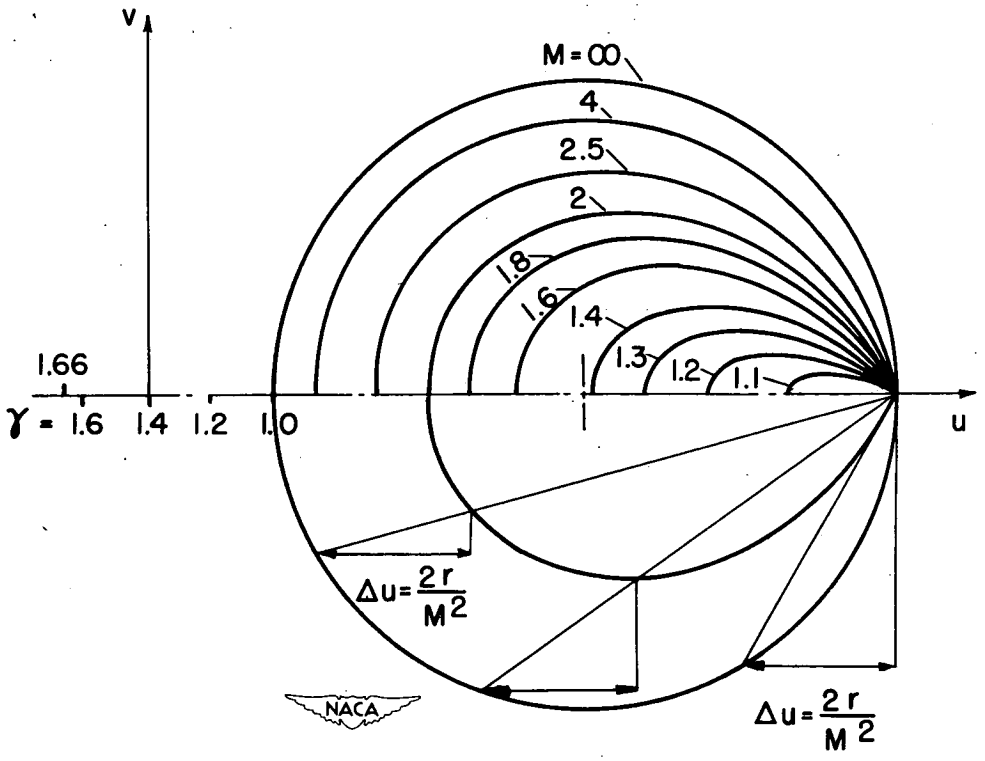

Figure 4.– Shock polars for perfect gases (strophoides).

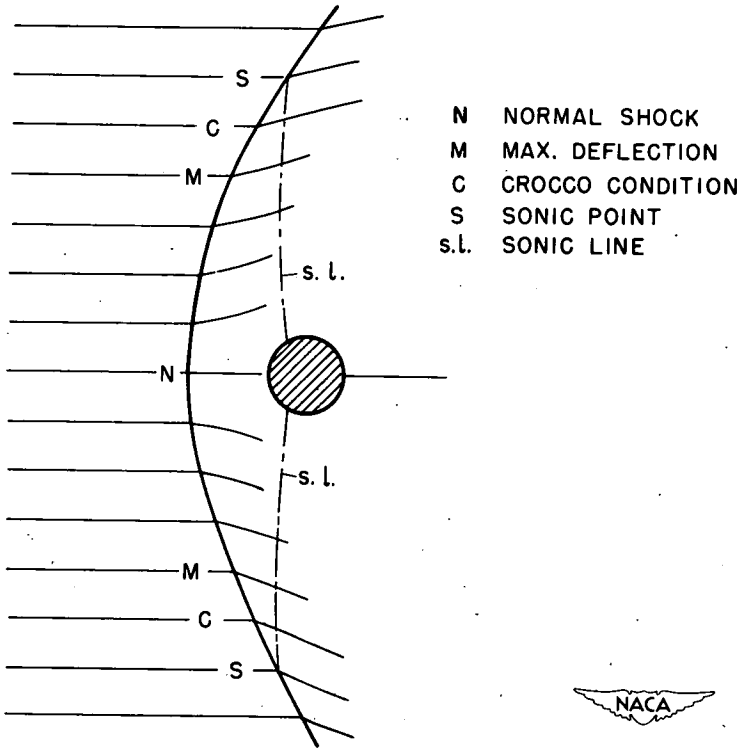

Figure 5.– Detached shock (bow wave).

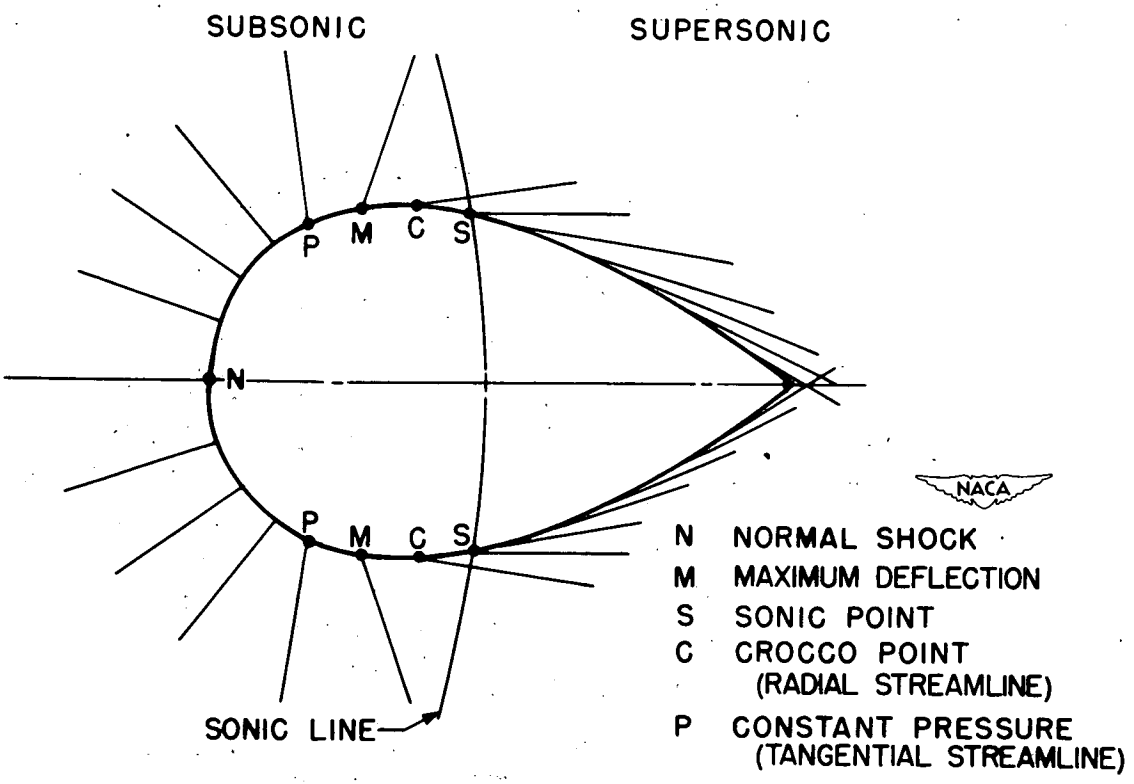

Figure 6.– Shock polar with streamlines (hedgehog or porcupine).

(Adapted from reference 7.)

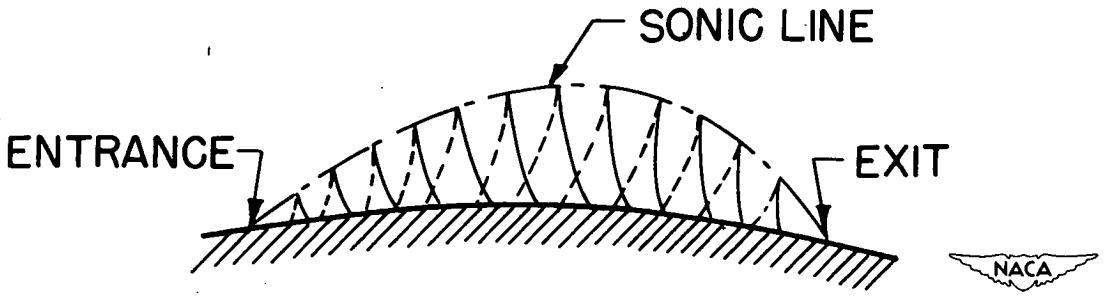

Figure 7.– Subsonic flow with supersonic portion. (From reference 7.)

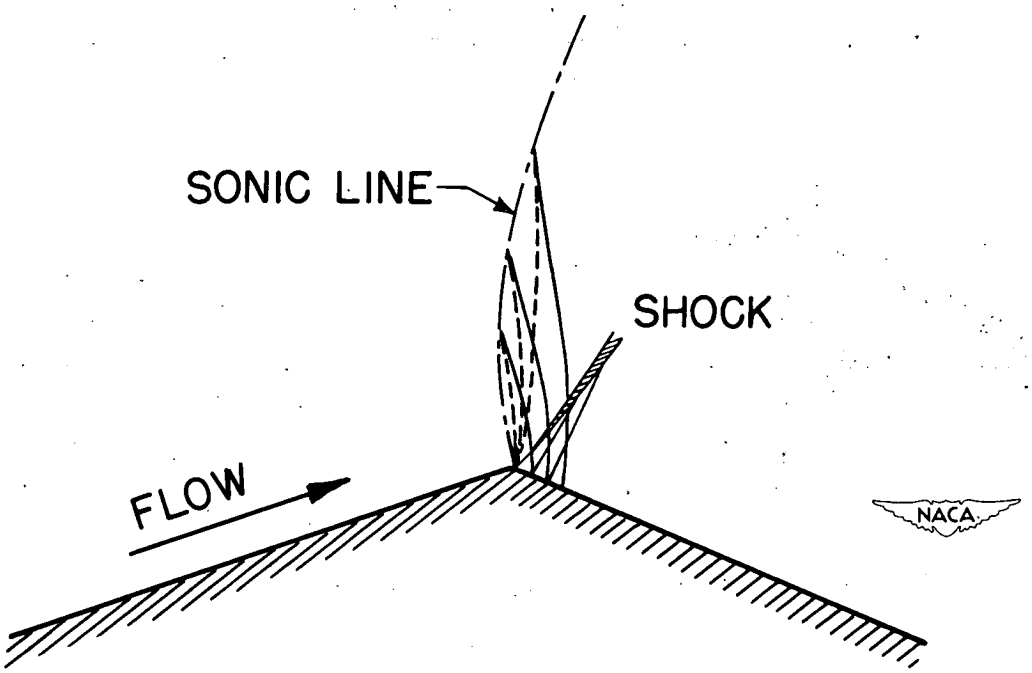

Figure 8.– Transonic flow around a corner. (Adapted from reference 7.)

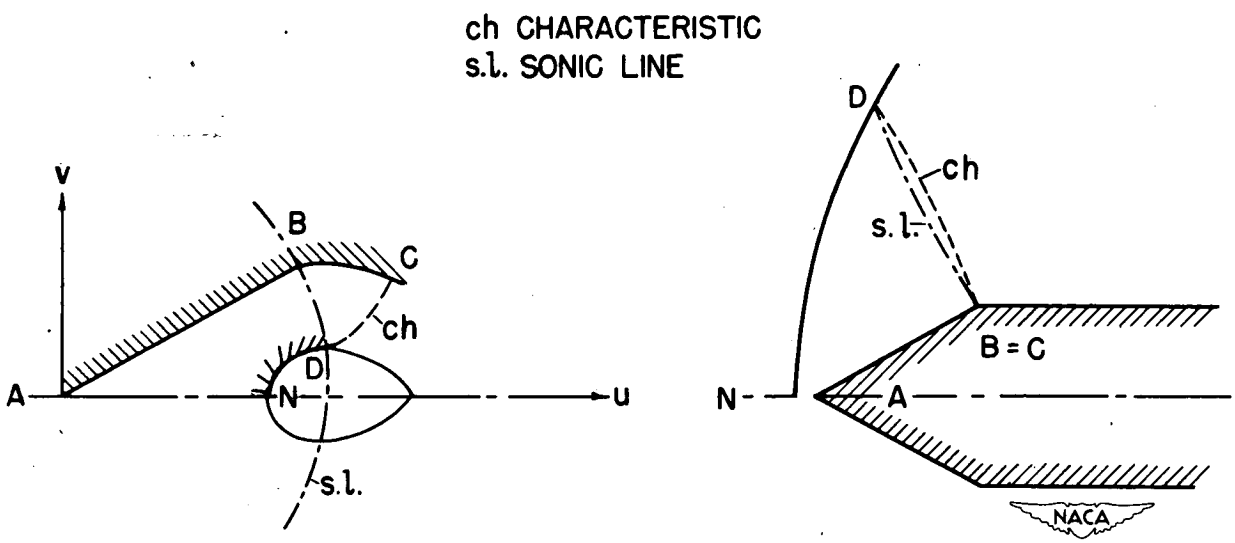

Figure 9.– Flow past a wedge. (Adapted from reference 7.)

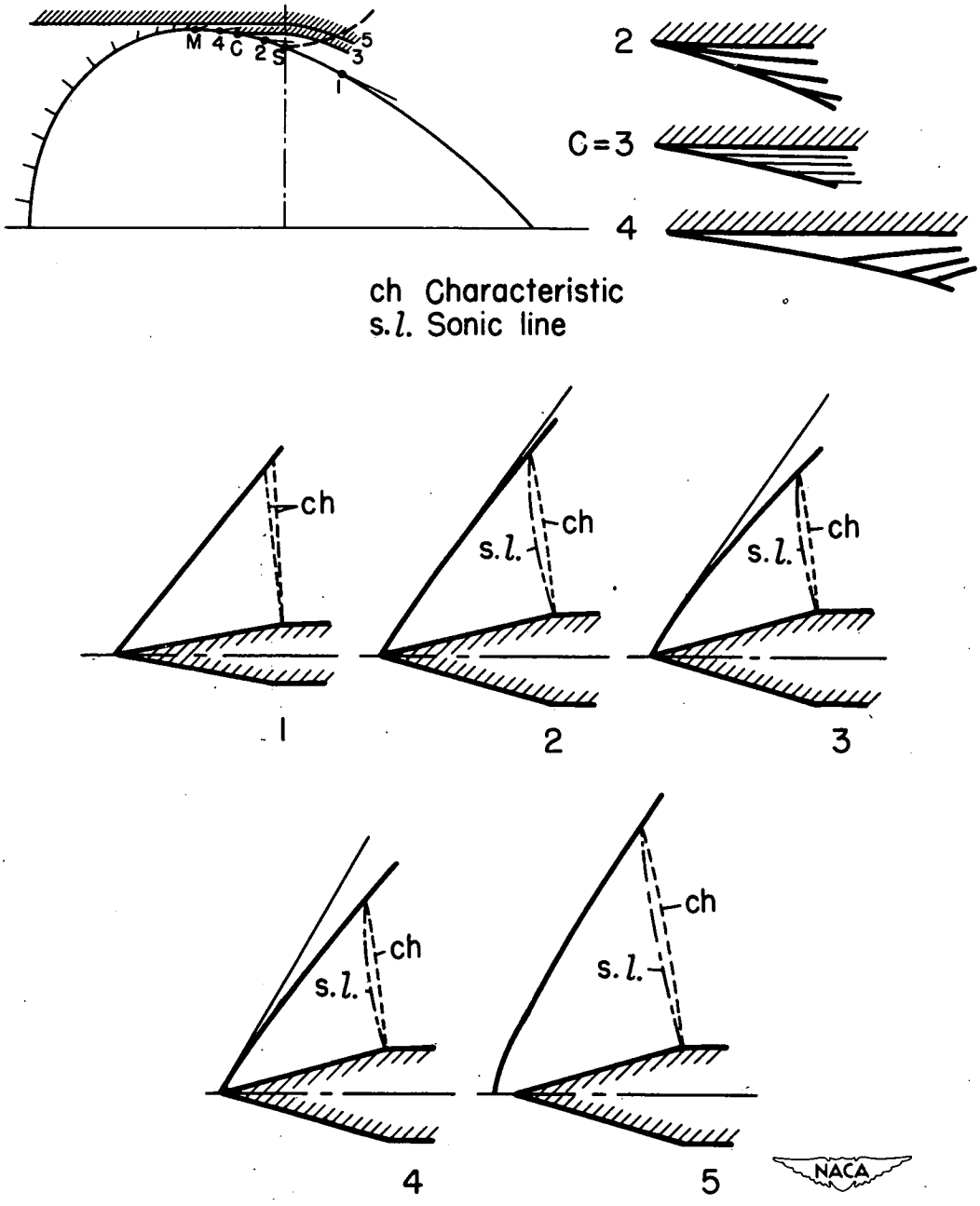

Figure 10.– Wedge near maximum angle with transit from attached to detached shock shown. (Adapted from reference 7.)

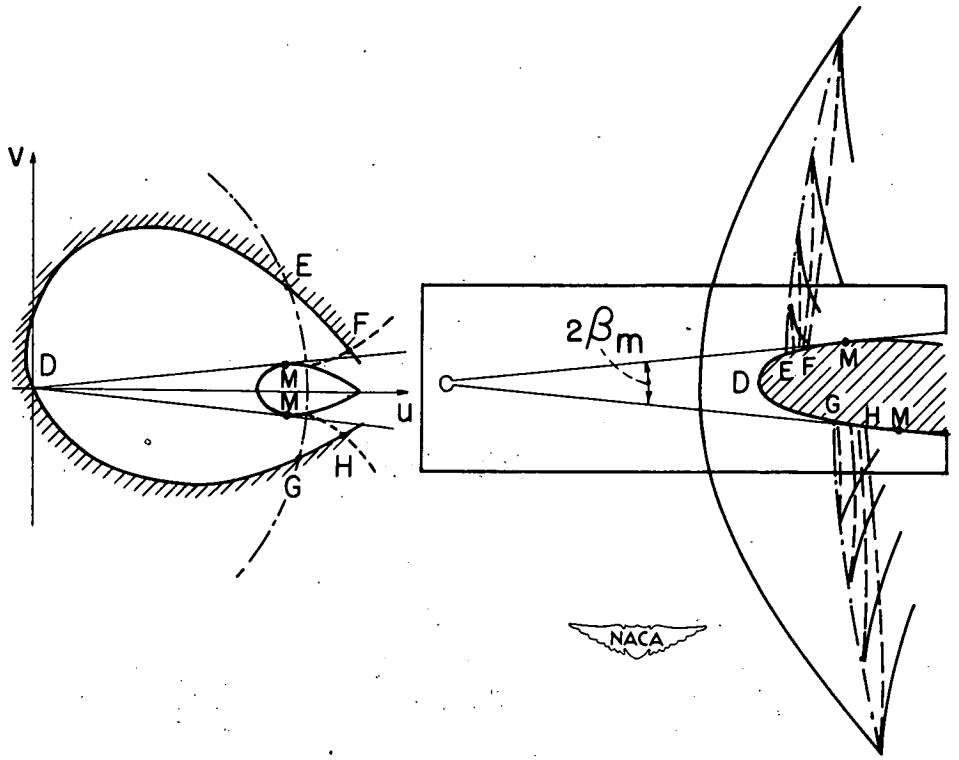

Figure 11.– Hodograph transformation.

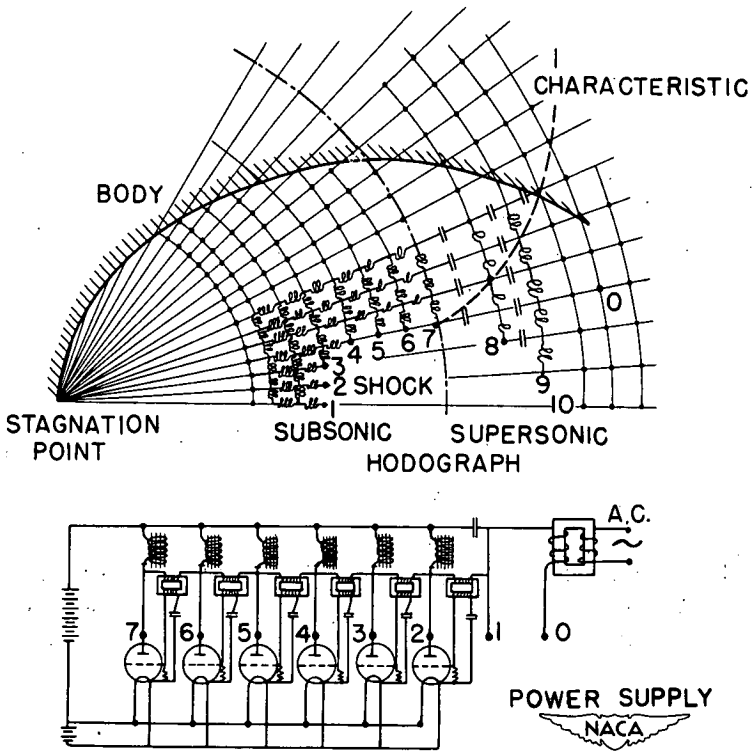

Figure 12.– The electrical hodograph of G. Kron (reference 8).

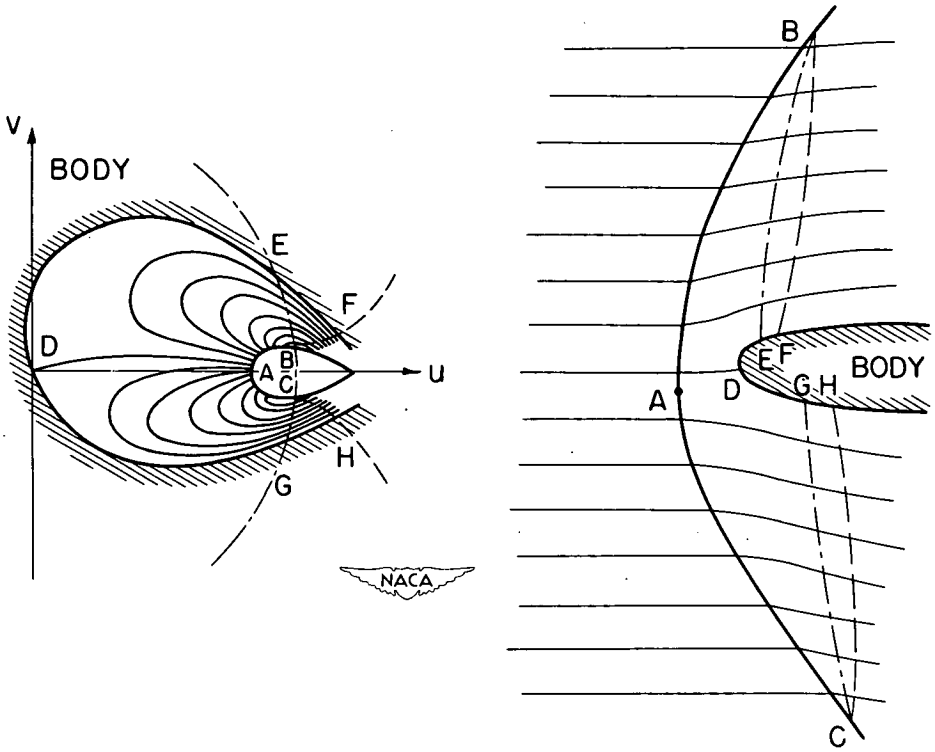

Figure 13.– Hodograph of detached shocks.

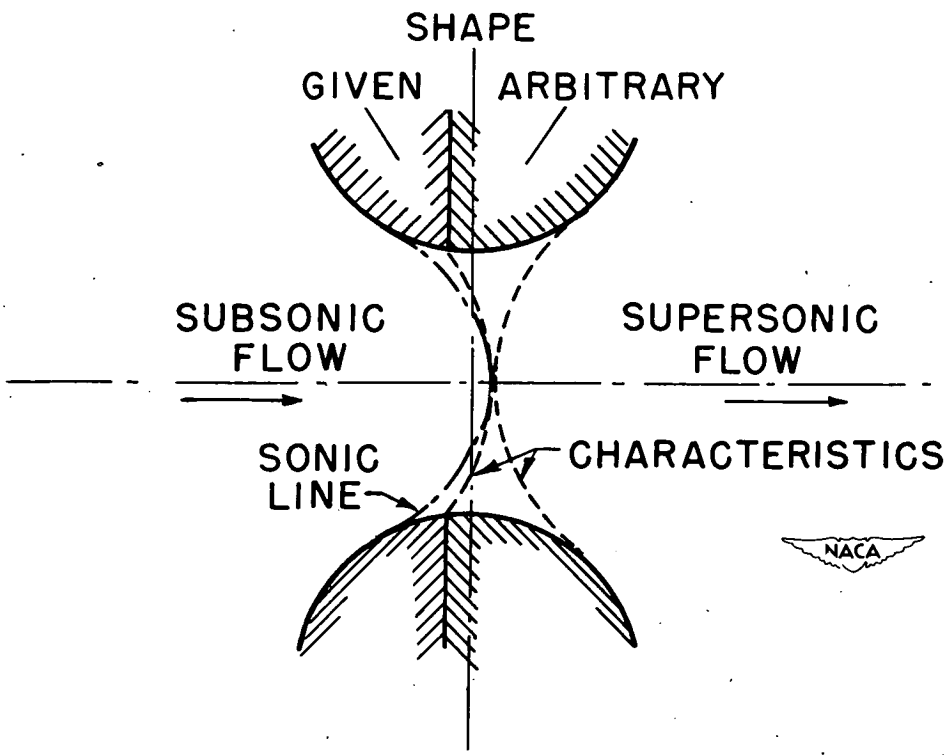

Figure 14.– Two-dimensional Laval nozzle.