.1309
n34
Y3,N21/5:6/2290
GOVT. DOC.
NACA TN 2290

# NATIONAL ADVISORY COMMITTEE FOR AERONAUTICS

## TECHNICAL NOTE 2290

## A METHOD FOR CALCULATING STRESSES IN TORSION-BOX COVERS WITH CUTOUTS

By Richard Rosecrans

Langley Aeronautical Laboratory
Langley Field, Va.

Washington
February 1951

BUSINESS, SCIENCE
& TECHNOLOGY DEP'T.

CONN. STATE LIBRARY

FEB 13 1951

NATIONAL ADVISORY COMMITTEE FOR AERONAUTICS

TECHNICAL NOTE 2290

# A METHOD FOR CALCULATING STRESSES IN TORSION-BOX COVERS WITH CUTOUTS

By Richard Rosecrans

## SUMMARY

A theory is presented for calculating stresses in the covers of torsion boxes containing large cutouts. Half the symmetrical uncut portion of the cover is represented by three stringers that carry all direct stresses and the intermediate cover material which is assumed to carry only shear stress. Differential equations of equilibrium are derived and solved to obtain stresses along each stringer. Illustrative examples are solved and the results are compared with experimental values. For one of these examples the results are also compared with a more detailed solution made by a numerical method of analysis. The agreement between theory and experiment is satisfactory in all cases except those with very large cutouts and flexible bulkheads.

## INTRODUCTION

An approximate method was developed in reference 1 for the analysis of stresses in torsion boxes containing large cutouts. This method consists in first idealizing the structure by concentrating all the direct-stress-carrying material of the box into main flange members and assuming all the shear to be carried by the webs and cover sheets. Expressions are then written for shear and direct stress in each of the members in terms of an unknown distribution of torque between the shear webs and cover sheets in the cutout bay. Finally, the principle of least work is used to find the actual distribution of torque and thus to determine the shear and direct stresses. The analysis is adequate for the design of all components of such structures except the cover containing the cutout.

The present paper extends the theory of reference 1 to permit a more detailed calculation of the stresses in the covers of such boxes. The method is based upon an idealization of the cover similar to that just described except that the full-width portion adjacent to the cutout is made to contain three stringers on each side of the longitudinal center line instead of only one as in reference 1. Differential equations of equilibrium are derived and solved to obtain stresses along each stringer.

Numerical results for an illustrative example are compared with experimental data and also with the results of a solution made by a numerical procedure (reference 2).

## SYMBOLS

| | |
|---|---|
| $a$ | length of gross section at one end of box, inches |
| $b$ | half-width of box, center to center of webs, inches $(b_1 + 2b_2)$ |
| $b_1$ | width of net section, inches |
| $b_2$ | width of each of the two interior panels in gross section of idealized structure, inches |
| $c$ | depth of box, center to center of cover sheets, inches |
| $d$ | half-length of net section |
| $k$ | fraction of total torque carried by shear webs in cutout bay |
| $t$ | thickness of cover sheet, inches |
| $t_{b_1}$ | thickness of top cover sheet in net section, inches |
| $t_{b_g}$ | thickness of top or bottom cover sheet in gross section, inches |
| $t_{b_n}$ | thickness of lower cover sheet in net section, inches |
| $t_B$ | thickness of torque-transfer bulkhead, inches |
| $t_{c_g}$ | thickness of shear web in gross section, inches |
| $t_{c_n}$ | thickness of shear web in net section, inches |
| $u_1$, $u_2$, $u_3$ | displacements in the x-direction at any point along stringers 1, 2, and 3, respectively, inches |
| $v$ | displacement of any cross section in y-direction, inches |
| $x$, $y$ | coordinate axes |

| | |
|---|---|
| $\overline{y}_1$, $\overline{y}_2$ | distance from neutral axis of net section to stringers 1 and 2, respectively, inches |
| $A_1$, $A_2$, $A_3$ | areas of stringers 1, 2, and 3, respectively, of idealized cover, square inches |
| $A_4$, $A_5 \ldots A_7$ | areas of flanges in simplified box, square inches (see fig. 7 for location of each area) |
| $C_1$, $C_2 \ldots C_6$ | constants of integration |
| D | differential operator |
| E | Young's modulus, pounds per square inch |
| G | shear modulus, pounds per square inch |
| I | moment of inertia of net section, inches |
| K, K' | dimensionless constants leading to the solution for the parameter k |
| T | torque, inch-pounds |
| $\beta_{ij}$ | factors in assumed solutions of differential equations (i designates the stringer and j designates the characteristic value in the solution of the differential equations of equilibrium) |
| $\lambda_j$ | characteristic values in the solution of the differential equations of equilibrium |
| $\sigma_1$, $\sigma_2$, $\sigma_3$ | direct stress in gross section in stringers 1, 2, and 3, respectively, pounds per square inch |
| $\sigma_{1_n}$, $\sigma_{2_n}$ | direct stress in net section in stringers 1 and 2, respectively, pounds per square inch |
| $\tau_1$, $\tau_2$, $\tau_3$ | shear stress in gross section in panels 1, 2, and 3, respectively, pounds per square inch |
| $\tau_n$ | shear stress in net section, pounds per square inch |

## METHOD OF ANALYSIS

The problem considered is the analysis of the cover of a torsion box of rectangular cross section with a centrally located cutout as indicated

in figure 1. As a first step in the analysis, the cover containing the cutout is separated from the rest of the box as a "free body." In place of the portion of the box that has been removed, forces must be added to the cover that are equal to those exerted by the box on the cover when the two parts were fastened together. These forces may be calculated by the method of analysis given in reference 1. Such a procedure leaves a stringer-stiffened panel, subjected to forces as indicated in figure 2, to be analyzed. Along the sides of the panel are forces representing the loading transferred to the corner angle by the shear webs. The lateral forces along the ends come from the end bulkheads, and the additional lateral forces at the junction of the full-width and cutout sections of the cover are introduced by the torque transfer bulkheads that bound the cutout bay. If the panel is assumed to be doubly symmetrical, only one quarter of it, as indicated by the shaded area in figure 2, need be considered. As before, the portion of the cover that is cut away must be replaced by the forces it exerts. The rest of the cover is an L-shaped, stringer-stiffened panel subjected to forces as shown in figure 3.

To simplify the analysis further, the panel is assumed to be represented with sufficient accuracy by the idealized structure of figure 4, which consists of three stringers assumed to carry all the tensile and compressive stress and three panels of cover sheet assumed to carry all the shear. This simplification follows a line of reasoning similar to that used in reference 3. The three stringers are located as follows: Stringer 1 is placed along the line of intersection of the shear web and cover sheet. Stringer 2 is placed along the edge of the cutout. Stringer 3 is placed midway between stringer 2 and the longitudinal center line of the cover. Between the stringers is a flat sheet of the same thickness as the cover sheet of the actual box but which differs from it by the assumption that it can carry only shearing stress. All the direct-stress-carrying material in the cover is concentrated in the three stringers. Distribution of this material to the different stringers is assumed to be as follows: All the corner angle is included in stringer 1. All the coaming stringer (the stringer bordering the cutout) is included in stringer 2. The rest of the material, including cover sheet and stiffeners, which lies between the locations of stringers 1 and 2 is divided equally between them. All the rest of the cover is included in stringer 3.

The analysis of the idealized structure may be subdivided further by cutting the frame along the dashed line in figure 3. The narrower portion that borders the cutout is referred to as the net section, and the full-width portion is called the gross section. The gross section and the external forces acting on it are shown in figure 5 and similar information for the net section is given in figure 6.

The factor $k$ is taken from reference 1. The various dimensions entering into its calculation are shown in figure 7 and the method for computing it is given in appendix A.

Stresses in the net section may be calculated with sufficient accuracy by the ordinary theory of cantilever beams. Thus the stress in the edge stringer is equal to

$$\sigma_{1_n} = \frac{T}{2c}\left[\frac{\bar{y}_1}{I}(1 - k) - \frac{k}{A_1 b}\right]x \tag{1}$$

and the stress in the coaming stringer is given by

$$\sigma_{2_n} = \frac{T\bar{y}_2}{2cI}(1 - k)\ x \tag{2}$$

The shear stress is constant throughout the net section and is equal to

$$\tau_n = \frac{T}{2b_1 ct}(1 - k) \tag{3}$$

Stringer stresses in the gross section may be computed from the equations

$$\sigma_i = \sum_{j=1}^{3} C_j \beta_{ij} e^{-\lambda_j x} - C_3 \beta_{i3} \frac{x}{a} \qquad (i = 1,\ 2,\ 3) \tag{4}$$

where

$$C_j = \frac{Td}{2b_1 c}\left\{\left[1 - k\left(1 + \frac{b_1}{b}\right)\right]\beta_{1j} + (k - 1)\beta_{2j}\right\} \tag{5}$$

$$\left.\begin{aligned}
\beta_{1j} &= \frac{2 - b_2\left(\frac{EA_3}{Gt}\right)\lambda_j^{\,2}}{\phi_j} \\
\beta_{2j} &= \frac{\left[\left(1 - \frac{b_1}{b}\right) - b_1\left(\frac{EA_1}{Gt}\right)\lambda_j^{\,2}\right]\left[2 - b_2\left(\frac{EA_3}{Gt}\right)\lambda_j^{\,2}\right]}{\phi_j} \\
\beta_{3j} &= \frac{1 - \frac{b_1}{b} - b_1\left(\frac{EA_1}{Gt}\right)\lambda_j^{\,2}}{\phi_j} \\
&\qquad\qquad (j = 1,\ 2,\ 3)
\end{aligned}\right\} \tag{6}$$

where

$$\phi_j = \pm\left\{A_1\left[2 - b_2\left(\frac{EA_3}{Gt}\right)\lambda_j^2\right]^2 + A_2\left[2 - b_2\left(\frac{EA_3}{Gt}\right)\lambda_j^2\right]^2\left[1 - \frac{b_1}{b} - b_1\left(\frac{EA_1}{Gt}\right)\lambda_j^2\right]^2 + A_3\left[1 - \frac{b_1}{b} - b_1\left(\frac{EA_1}{Gt}\right)\lambda_j^2\right]^2\right\}^{1/2}$$

(use whichever sign is necessary to make $\beta_{2j}$ positive)

$$\left.\begin{aligned}
\lambda_{1,2}^2 &= \frac{Gt}{EA_1A_2A_3bb_1b_2}\left\{A_1A_2bb_1 + \frac{1}{2}A_1A_3b(b_1 + b_2) + A_2A_3b_2^2 \pm \right. \\
&\qquad \left.\left[A_1^2A_2^2b^2b_1^2 + \frac{1}{4}A_1^2A_3^2b^2(b_1 + b_2)^2 + A_2^2A_3^2b_2^4 - A_1A_2A_3bb_2\left(A_1bb_1 + 2A_2b_1b_2 - A_3b_2^2\right)\right]^{1/2}\right\} \\
\lambda_3^2 &= 0
\end{aligned}\right\} \tag{7}$$

($\lambda_1$ is associated with the positive root). The coordinate $x$ is measured from the junction of the net and gross section toward the tip. Shear stresses are computed from the equations

$$\left.\begin{aligned}
\tau_1 &= \frac{T}{4bct}\left[1 - \frac{d}{a}(2k - 1)\right] + \frac{A_1}{t}\frac{d\sigma_1}{dx} \\
\tau_2 &= \tau_1 + \frac{A_2}{t}\frac{d\sigma_2}{dx} \\
\tau_3 &= \tau_2 + \frac{A_3}{t}\frac{d\sigma_3}{dx}
\end{aligned}\right\} \tag{8}$$

Details of the derivation of the equations are given in appendix B.

## NUMERICAL EXAMPLE

In order to demonstrate the computational procedure, the method is applied to the torsion box designated as case 1 in reference 1. After isolating the cover from the rest of the box and idealizing it in the manner outlined previously, the following data are obtained:

$A_1$ = 1.936 square inches $A_2$ = 0.575 square inches

$A_3$ = 1.306 square inches

$b$ = 25.70 inches $b_1$ = 11.12 inches

$b_2$ = 7.29 inches

$a$ = 36.75 inches $c$ = 10 inches

$d$ = 24.5 inches $t$ = 0.063 inches

$I$ = 36.75 inches$^4$ $T$ = 99,750 pound-inches

$\bar{y}_1$ = 2.30 inches $\bar{y}_2$ = 8.82 inches

The shear and Young's moduli are taken as

$G$ = 4,000,000 pounds per square inch

$E$ = 10,600,000 pounds per square inch

The value of $k$, obtained from reference 1, is

$$k = 0.546$$

Stresses in the net section are then computed from equations (1), (2), and (3) as

$$\sigma_{1_n} = 87x$$

$$\sigma_{2_n} = 543x$$

$$\tau_n = 3,230$$

The first step in computing the direct stresses in the gross section is to solve equations (7) for $\lambda_1$, $\lambda_2$, and $\lambda_3$. The results are

$$\lambda_1 = 0.1088 \qquad \lambda_2 = 0.0564 \qquad \lambda_3 = 0$$

Equations (6) are solved for $\beta_{ij}$ and yield the following values:

$$\beta_{11} = -0.1124 \qquad \beta_{21} = 1.1413 \qquad \beta_{31} = -0.4165$$

$$\beta_{12} = -0.2340 \qquad \beta_{22} = 0.5412 \qquad \beta_{32} = 0.7454$$

$$\beta_{13} = 0.6702 \qquad \beta_{23} = 0.3802 \qquad \beta_{33} = 0.1901$$

Values of the constants $C_1$, $C_2$, and $C_3$ are calculated from equation (5) as follows:

$$C_1 = -5963 \qquad C_2 = -3260 \qquad C_3 = -293$$

Substitution of the values for $\beta_{ij}$ and the integration constants into equation (4) yields

$$\sigma_1 = 670e^{-0.1088x} + 763e^{-0.0564x} - 196 + 5.3x$$

$$\sigma_2 = -6805e^{-0.1088x} - 1764e^{-0.0564x} - 111 + 3.0x$$

$$\sigma_3 = 2483e^{-0.1088x} - 2430e^{-0.0564x} - 56 + 1.5x$$

Shear stresses are computed from equations (8) and the results are

$$\tau_1 = 1610 - 2241e^{-0.1088x} - 1322e^{-0.0564x}$$

$$\tau_2 = 1637 + 4517e^{-0.1088x} - 414e^{-0.0564x}$$

$$\tau_3 = 1669 - 1084e^{-0.1088x} + 2427e^{-0.0564x}$$

Figures 8 and 9 show the shear and stringer stresses, respectively, computed from these equations. Similar calculations have been made for the other cases listed in reference 1, and the results are shown in figures 10 to 15. For convenience of reference, the necessary data for each case are given in table 1. Cases 1, 2, and 3 differ only in the width of the cutout. Case 3 has practically a full-width cutout. Case 4 has been omitted here, since it differs from case 3 only by the removal of intermediate bulkheads, which does not affect the computed values. Case 5 has a slightly longer cutout than case 3, but of the same width. Principally, however, it differs from case 3 in that the torque-transfer bulkheads are made very much more rigid.

## RESULTS AND DISCUSSION

The preceding analysis is based upon an idealization of the structure, which permits the calculation of direct stresses along only three longitudinal lines. Between stringers, the variation of direct stress is assumed to be linear. The cover is divided into three panels, and the shear is assumed to be constant in each panel at any cross section. In addition, the forces which are assumed to be acting on the cover also are calculated by an approximate method based upon an idealized structure. These considerations make it clear that only approximate results may be expected and that the stress distribution can be indicated in only a very general way. Upon such a basis, the correlation between computed and measured stresses may be considered good. The theory of reference 1 is capable of predicting only a constant shear stress throughout the gross section of the cover, whereas the experimental results indicate that the true distribution deviates greatly from a uniform stress, especially in the vicinity of the cutout. The method outlined in the present paper permits the shear stresses to be divided over three regions in each half of the cover, represented by the three panels between the stringers, and, in addition, the stresses may be varied from one cross section to another. The true state of stress can therefore be approximated much more closely. In a similar way, the additional stringers make possible a more detailed distribution of the direct stress. The theory appears to indicate peak shear values a little below those actually existing, as would be expected, since the constant shear represents average stress over the panel. Stringer stresses seem to be fairly reliable in the case of cutouts of moderate width or those that are bounded by very rigid bulkheads, but for cutouts of almost full width combined with flexible bulkheads, some sizable discrepancies occur. For instance, cases 1, 2, and 3 all have quite flexible bulkheads. Case 1 represents the smallest cutout for which calculations were made, and the experimental data follow the computed curves quite closely, as indicated by figure 9. Case 2 represents a somewhat wider cutout, and the stringer stresses begin to show some deviation near the cutout as shown at station 27.5 in figure 11. Case 3

represents almost a full-width cutout, still with a flexible bulkhead, and the stringer stresses show a marked discrepancy near the cutout as at station 27.5 in figure 13. Case 5 shows practically the same cutout as case 3 but with a greatly strengthened torque-transfer bulkhead. Computed and measured stringer stresses agree much more closely as indicated by figure 15. Case 3 is somewhat extreme and for such structures it may be necessary to develop a more comprehensive theory which takes account of additional factors such as distortion in the chordwise direction.

Case 1 was computed by a numerical method discussed in appendix C. Results are shown by the dashed lines in figures 8 and 9. The method is somewhat more accurate than the one already described but was judged not to offer sufficient advantages to justify the added labor that it requires.

Langley Aeronautical Laboratory
National Advisory Committee for Aeronautics
Langley Field, Va., October 27, 1950

# APPENDIX A

## COMPUTATION OF k

The external forces that are shown in figures 3 and 5 have been derived from reference 1 and are written as functions of k. The factor k represents the fraction of the total torque carried by the shear webs in the cutout bay. No derivation of k will be given here, but for convenience, the equations necessary for computing it are as follows:

$$k = \frac{\sum_{1}^{10} K'}{\sum_{1}^{10} K}$$

where

$$K_1 = \frac{4c}{t_{c_n}} \qquad K_1' = 0$$

$$K_2 = \frac{4b}{t_{b_n}} \qquad K_2' = K_2$$

$$K_3 = \frac{4b^2}{b_1 t_{b_1}} \qquad K_3' = K_3$$

$$K_4 = \frac{8bd}{at_{b_g}} \qquad K_4' = \frac{1}{2}\left(1 - \frac{a}{d}\right)K_4$$

$$K_5 = \frac{4cd}{at_{c_g}} \qquad K_5' = \frac{1}{2}\left(1 + \frac{a}{d}\right)K_5$$

$$K_6 = \frac{4bc}{dt_B}\left(1 + \frac{d}{a}\right)^2 \qquad K_6' = \frac{1}{2} K_6$$

$$K_7 = \frac{4G}{3E} \frac{b^2d^2}{A_4 b_1^{\,2}} \qquad K_7' = K_7$$

$$K_8 = \frac{4G}{3E} \frac{d^2}{A_5}\left(1 + \frac{b}{b_1}\right)^2 \qquad K_8' = \frac{b}{b + 2b_1} K_8$$

$$K_9 = \frac{16G}{3E} \frac{d^2}{A_6} \qquad K_9' = \frac{1}{2} K_9$$

$$K_{10} = \frac{32G}{3E} \frac{ad}{A_7} \qquad K_{10}' = \frac{1}{2} K_{10}$$

Subscripts for the various $A$ terms are as indicated in figure 7. Locations of the stringers having areas $A_4$ to $A_7$ inclusive also are shown in the same figure. The amount of area to include in the idealized stringers is a matter of judgment to some extent. For the structures considered here, the choice is made relatively easy because of the large corner angles. Areas $A_5$ to $A_7$ inclusive may be taken as only the corner angle, and all other areas neglected. In other cases, however, consideration must be given to the contributions of the shear webs, cover sheets, and stringers. The area of the coaming stringer and a suitable addition for the influence of the rest of the cover of the net section is included in $A_4$.

# APPENDIX B

## DERIVATION OF STRESS EQUATIONS FOR GROSS SECTION

Figure 5 shows the idealized gross section and the external loading system to which it is subjected. Expressions for the loads are taken from reference 1, except for the two loads applied to stringers 1 and 2 which are transmitted by the stringers of the net section. These loads are derived from static considerations of the net section. With the notation

$u_1$ displacement of any point on stringer 1 in the x-direction

$u_2$ displacement of any point on stringer 2 in the x-direction

$u_3$ displacement of any point on stringer 3 in the x-direction

$v$ displacement of any cross section in the y-direction

and the positive shear defined as that which distorts an element of area so that the length of the first-quadrant diagonal is increased, the following relationships may be written:

$$\left.\begin{aligned}
\frac{du_1}{dx} &= \frac{\sigma_1}{E} \\
\frac{du_2}{dx} &= \frac{\sigma_2}{E} \\
\frac{du_3}{dx} &= \frac{\sigma_3}{E} \\
\tau_1 &= G\left(\frac{u_1 - u_2}{b_1} + \frac{dv}{dx}\right) \\
\tau_2 &= G\left(\frac{u_2 - u_3}{b_2} + \frac{dv}{dx}\right) \\
\tau_3 &= G\left(\frac{u_3}{b_2} + \frac{dv}{dx}\right)
\end{aligned}\right\} \qquad \text{(B1)}$$

and, therefore,

$$\left.\begin{aligned}
\frac{d\tau_1}{dx} &= G\left(\frac{\sigma_1 - \sigma_2}{b_1 E} + \frac{d^2v}{dx^2}\right) \\
\frac{d\tau_2}{dx} &= G\left(\frac{\sigma_2 - \sigma_3}{b_2 E} + \frac{d^2v}{dx^2}\right) \\
\frac{d\tau_3}{dx} &= G\left(\frac{\sigma_3}{b_2 E} + \frac{d^2v}{dx^2}\right)
\end{aligned}\right\} \tag{B2}$$

Summing forces in the x-direction along each stringer in turn yields

$$\left.\begin{aligned}
&A_1 \frac{d\sigma_1}{dx} + \frac{T}{4bc}\left[1 - \frac{d}{a}(2k - 1)\right] - \tau_1 t = 0 \\
&\text{or} \\
&A_1 \frac{d^2\sigma_1}{dx^2} - t\,\frac{d\tau_1}{dx} = 0
\end{aligned}\right\} \tag{B3a}$$

$$\left.\begin{aligned}
&A_2 \frac{d\sigma_2}{dx} + t\left(\tau_1 - \tau_2\right) = 0 \\
&\text{or} \\
&A_2 \frac{d^2\sigma_2}{dx^2} + t\left(\frac{d\tau_1}{dx} - \frac{d\tau_2}{dx}\right) = 0
\end{aligned}\right\} \tag{B3b}$$

$$\left.\begin{aligned}
&A_3 \frac{d\sigma_3}{dx} + t\left(\tau_2 - \tau_3\right) = 0 \\
&\text{or} \\
&A_3 \frac{d^2\sigma_3}{dx^2} + t\left(\frac{d\tau_2}{dx} - \frac{d\tau_3}{dx}\right) = 0
\end{aligned}\right\} \tag{B3c}$$

In order to obtain an expression for $dv/dx$, use is made of the fact that the sum of the internal shear forces must equal the external load, or

$$\frac{T}{4c}\left[1 + \frac{d}{a}(2k - 1)\right] = t\left(\tau_1 b_1 + \tau_2 b_2 + \tau_3 b_2\right) \tag{B4}$$

Substituting the shear forces given in equations (B1) into equation (B4) and simplifying yields

$$\left.\begin{aligned} \frac{dv}{dx} &= -\frac{u_1}{v} + \frac{T}{4Gtbc}\left[1 + \frac{d}{a}(2k - 1)\right] \\ \text{or} \qquad & \\ \frac{d^2v}{dx^2} &= -\frac{\sigma_1}{Eb} \end{aligned}\right\} \tag{B5}$$

Upon substitution of the equation for $d^2v/dx^2$ into equations (B2) and then (B2) into (B3), the following differential equations are obtained:

$$\left.\begin{aligned} A_1E\frac{d^2\sigma_1}{dx^2} - Gt\left(\frac{1}{b_1} - \frac{1}{b}\right)\sigma_1 + \frac{Gt}{b_1}\sigma_2 &= 0 \\ A_2E\frac{d^2\sigma_2}{dx^2} + \frac{Gt}{b_1}\sigma_1 - Gt\left(\frac{1}{b_1} + \frac{1}{b_2}\right)\sigma_2 + \frac{Gt}{b_2}\sigma_3 &= 0 \\ A_3E\frac{d^2\sigma_3}{dx^2} + \frac{Gt}{b_2}\sigma_2 - \frac{2Gt}{b_2}\sigma_3 &= 0 \end{aligned}\right\} \tag{B6}$$

Introducing the notation $\frac{d^2\sigma}{dx^2} = D^2\sigma$ and collecting terms allows the differential equations (B6) to be written in matrix form as

$$\begin{vmatrix} A_1ED^2 - Gt\left(\frac{1}{b_1} - \frac{1}{b}\right) & \frac{Gt}{b_1} & 0 \\ \frac{Gt}{b_1} & A_2ED^2 - Gt\left(\frac{1}{b_1} + \frac{1}{b_2}\right) & \frac{Gt}{b_2} \\ 0 & \frac{Gt}{b_2} & A_3ED^2 - \frac{2Gt}{b_2} \end{vmatrix} \begin{vmatrix} \sigma_1 \\ \sigma_2 \\ \sigma_3 \end{vmatrix} = 0 \quad \text{(B7)}$$

To solve the differential equations, assume solutions of the form

$$\sigma_1 = C\beta_1 e^{\lambda x} \qquad \sigma_2 = C\beta_2 e^{\lambda x} \qquad \sigma_3 = C\beta_3 e^{\lambda x}$$

where $C$ = Constant of integration. Then

$$D^2\sigma_1 = C\beta_1\lambda^2 e^{\lambda x}$$

$$D^2\sigma_2 = C\beta_2\lambda^2 e^{\lambda x}$$

$$D^2\sigma_3 = C\beta_3\lambda^2 e^{\lambda x}$$

and equations (B7) become

$$\begin{vmatrix} A_1E\lambda^2 - Gt\left(\frac{1}{b_1} - \frac{1}{b}\right) & \frac{Gt}{b_1} & 0 \\ \frac{Gt}{b_1} & A_2E\lambda^2 - Gt\left(\frac{1}{b_1} + \frac{1}{b_2}\right) & \frac{Gt}{b_2} \\ 0 & \frac{Gt}{b_2} & A_3E\lambda^2 - \frac{2Gt}{b_2} \end{vmatrix} \begin{vmatrix} \beta_1 \\ \beta_2 \\ \beta_3 \end{vmatrix} = 0 \quad \text{(B8)}$$

from which, by setting the determinant of the coefficients equal to zero, three values of $\lambda^2$ are found

$$\left.\begin{aligned}
\lambda_{1,2}^{\ 2} &= \frac{Gt}{EA_1A_2A_3bb_1b_2}\left\{A_1A_2bb_1 + \frac{1}{2}A_1A_3b\left(b_1 + b_2\right) + A_2A_3b_2^{\ 2} \pm \right. \\
&\qquad \left. \left[A_1^{\ 2}A_2^{\ 2}b^2b_1^{\ 2} + \frac{1}{4}A_1^{\ 2}A_3^{\ 2}b^2\left(b_1 + b_2\right)^2 + A_2^{\ 2}A_3^{\ 2}b_2^{\ 4} - \right.\right. \\
&\qquad \left.\left. A_1A_2A_3bb_2\left(A_1bb_1 + 2A_2b_1b_2 - A_3b_2^{\ 2}\right)\right]^{1/2}\right\} \\
\lambda_3^{\ 2} &= 0
\end{aligned}\right\} \tag{B9}$$

($\lambda_1$ is associated with the plus root). There is a separate set of values of $\beta$ corresponding to each different value of $\lambda^2$. These values of $\beta$ are denoted by $\beta_{i1}$, $\beta_{i2}$, and $\beta_{i3}$, the second subscript corresponding to the subscript of the $\lambda_j^{\ 2}$ with which it is associated. The values of the various $\beta_{ij}$ may be determined in relation to each other from two of the equations (B8). Thus

$$\left.\begin{aligned}
\beta_{1j} &= \frac{\beta_{2j}}{1 - \frac{b_1}{b} - b_1\frac{EA_1}{Gt}\lambda_j^{\ 2}} \\
\beta_{3j} &= \frac{\beta_{2j}}{2 - b_2\frac{EA_3}{Gt}\lambda_j^{\ 2}} \\
&\qquad (j = 1,\ 2,\ 3)
\end{aligned}\right\} \tag{B10}$$

The following expressions for $\sigma_i$ may now be written:

$$\left.\begin{aligned}
\sigma_1 &= C_1\beta_{11}e^{-\lambda_1 x} + C_2\beta_{12}e^{-\lambda_2 x} + C_3\beta_{13} + C_4\beta_{13}x + C_5\beta_{11}e^{\lambda_1 x} + C_6\beta_{12}e^{\lambda_2 x} \\
\sigma_2 &= C_1\beta_{21}e^{-\lambda_1 x} + C_2\beta_{22}e^{-\lambda_2 x} + C_3\beta_{23} + C_4\beta_{23}x + C_5\beta_{21}e^{\lambda_1 x} + C_6\beta_{22}e^{\lambda_2 x} \\
\sigma_3 &= C_1\beta_{31}e^{-\lambda_1 x} + C_2\beta_{32}e^{-\lambda_2 x} + C_3\beta_{33} + C_4\beta_{33}x + C_5\beta_{31}e^{\lambda_1 x} + C_6\beta_{32}e^{\lambda_2 x}
\end{aligned}\right\} \quad \text{(B11)}$$

This result constitutes the formal solution of the differential equations.

The integration constants $C_1$, $C_2$ . . . $C_6$ are as yet arbitrary and are used to make the stresses satisfy the boundary conditions. The boundary condition at each end of each stringer is substituted into the stress equations (B11) and the resulting six equations are solved simultaneously for $C_1$, $C_2$ . . . $C_6$. The integration constants can be evaluated much more easily, however, by taking advantage of an orthogonality relation which may be shown to exist among the values of $\beta_{ij}$.

Before proceeding with this step, it may be noted that, if the box is infinitely long, $C_5$ and $C_6$ must vanish in order to obtain finite stress at the tip. Calculations for a number of boxes of practical proportions indicate that only a negligible error is introducted by disregarding these two terms. Thus, for practical purposes, the stress equations (B11) may be reduced to

$$\sigma_1 = C_1\beta_{11}e^{-\lambda_1 x} + C_2\beta_{12}e^{-\lambda_2 x} + C_3\beta_{13} + C_4\beta_{13}x \qquad \text{(B12a)}$$

$$\sigma_2 = C_1\beta_{21}e^{-\lambda_1 x} + C_2\beta_{22}e^{-\lambda_2 x} + C_3\beta_{23} + C_4\beta_{23}x \qquad \text{(B12b)}$$

$$\sigma_3 = C_1\beta_{31}e^{-\lambda_1 x} + C_2\beta_{32}e^{-\lambda_2 x} + C_3\beta_{33} + C_4\beta_{33}x \qquad \text{(B12c)}$$

At $x = 0$, the boundary conditions are

$$\sigma_1 = \frac{Td}{2A_1b_1c}\left(1 - k - k\frac{b_1}{b}\right)$$

$$\sigma_2 = \frac{Td}{2A_2b_1c}(k - 1)$$

$$\sigma_3 = 0$$

Substitution of these values into equations (B12) gives

$$C_1\beta_{11} + C_2\beta_{12} + C_3\beta_{13} = \frac{Td}{2A_1b_1c}\left[1 - k\left(1 + \frac{b_1}{b}\right)\right] \tag{B13a}$$

$$C_1\beta_{21} + C_2\beta_{22} + C_3\beta_{23} = \frac{Td}{2A_2b_1c}(k - 1) \tag{B13b}$$

$$C_1\beta_{31} + C_2\beta_{32} + C_3\beta_{33} = 0 \tag{B13c}$$

It may be shown by manipulation of equations (B8) that

$$\left.\begin{aligned} A_1\beta_{11}\beta_{12} + A_2\beta_{21}\beta_{22} + A_3\beta_{31}\beta_{32} &= 0 \\ A_1\beta_{12}\beta_{13} + A_2\beta_{22}\beta_{23} + A_3\beta_{32}\beta_{33} &= 0 \\ A_1\beta_{11}\beta_{13} + A_2\beta_{21}\beta_{23} + A_3\beta_{31}\beta_{33} &= 0 \end{aligned}\right\} \tag{B14}$$

For instance, if equations (B8) for $\lambda_j = \lambda_1$ are multiplied by $\beta_{12}$, equations (B8) for $\lambda_j = \lambda_2$ are multiplied by $\beta_{11}$, the corresponding

equations of each set are subtracted from each other, and finally the resulting three equations are added, then the first of equations (B14) is obtained. A similar procedure yields the remaining two equations.

Also, $\beta_{1j}$ and $\beta_{3j}$ have been expressed as functions of $\beta_{2j}$ (equations (B10)) which is as yet unrestricted. Some simplification may be obtained by choosing $\beta_{2j}$ so that

$$A_1\beta_{11}^2 + A_2\beta_{22}^2 + A_3\beta_{33}^2 = 1 \tag{B15}$$

in a manner analogous to normalization.

Now, let equation (B13a) be multiplied by $A_1\beta_{11}$, equation (B13b) by $A_2\beta_{21}$, and equation (B13c) by $A_3\beta_{31}$ and let the results be added. If the orthoganality relations (B14) and equation (B15) are taken into account, it is found that

$$C_1 = \frac{Td}{2b_1c}\left\{\left[1 - k\left(1 - \frac{b_1}{b}\right)\right]\beta_{11} + (k - 1)\beta_{21}\right\} \tag{B16}$$

In a similar manner, it may be determined that

$$C_2 = \frac{Td}{2b_1c}\left\{\left[1 - k\left(1 + \frac{b_1}{b}\right)\right]\beta_{12} + (k - 1)\beta_{22}\right\} \tag{B17}$$

and

$$C_3 = \frac{Td}{2b_1c}\left\{\left[1 - k\left(1 + \frac{b_1}{b}\right)\right]\beta_{13} + (k - 1)\beta_{23}\right\} \tag{B18}$$

At $x = a$ the boundary conditions are $\sigma_1 = \sigma_2 = \sigma_3 = 0$. With these values substituted into equations (B12), equation (B12a) multiplied by $A_1\beta_{13}$, equation (B12b) by $A_2\beta_{23}$, and equation (B12c) by $A_3\beta_{33}$, addition of the equations yields

$$C_4 = -\frac{C_3}{a} \tag{B19}$$

Introduction of the values for $C_1$, $C_2$, $C_3$, and $C_4$ into equations (B12) defines final solutions for the stress in each of the three stringers at any point $x$ distant from the y-axis.

Shearing stresses in each of the three panels may be obtained directly from equations (B3) as

$$\left.\begin{aligned}
\tau_1 &= \frac{T}{4bct}\left[1 - \frac{d}{a}(2k - 1)\right] + \frac{A_1}{t}\frac{d\sigma_1}{dx} \\
\tau_2 &= \tau_1 + \frac{A_2}{t}\frac{d\sigma_2}{dx} \\
\tau_3 &= \tau_2 + \frac{A_3}{t}\frac{d\sigma_3}{dx}
\end{aligned}\right\} \qquad \text{(B20)}$$

# APPENDIX C

## DISCUSSION OF NUMERICAL PROCEDURE

The idealized cover used in the preceding method could be made more nearly like the structure from which it was derived by increasing the number of stringers. It is clear that such a procedure would greatly increase the labor necessary to obtain a solution, especially since the equation for $\lambda$ would be of some higher degree. If additional stringers must be included in the analysis, it probably is simpler to use a numerical procedure such as the one given in reference 2. In this method, the external forces acting on the cover are computed in the same manner as before, but the idealization of the structure takes a different form. The cover is divided into a number of rectangular units or panels as indicated in figure 16. Each of these panels is assumed to be bounded on the sides parallel to the longitudinal center line of the box by stringers of finite extensional stiffness. The panels also are assumed to be bounded on the ends by infinitely rigid members which maintain the cross section but offer no resistance to motion outside of that plane. Between the edge members, it is assumed that a sheet of the same thickness as the cover exists and that it carries only shearing stress.

If equilibrium of the elements of the structure is to be satisfied, a definite relationship must exist between the displacement of any given panel and the displacements of all the panels that form its borders. This relationship depends upon the elastic properties of each of the panels involved. Details of these relationships and their derivation are given in reference 2. When such relationships (hereinafter referred to as iteration equations) have been established for all the panels, an assumed set of displacements is introduced. The only restriction upon these displacements is that they must satisfy the statics of the problem, but, of course, the work involved is reduced if the assumed values are as close as possible to the actual displacements. A usual assumption is that the values will conform to the standard rules of strength of materials. If all the assumed displacements were exactly correct, all the iteration equations would be satisfied. If the assumed displacements are not exact, new values for the displacements are obtained which more nearly satisfy the iteration equations. The process may be repeated until sufficiently accurate displacements are obtained.

When the iteration has been completed, the results are in the form of displacements of each corner of each panel into which the cover was divided. With this information, it is a simple matter to calculate shear or normal stresses along any desired section. The detail with which the stress distribution can be obtained depends upon the number of panels which are included in the idealized cover.

The same problem that was used as an illustrative example of the three-stringer method has been solved by the numerical procedure. The manner in which it was subdivided into panels is illustrated in figure 16. Shear and normal stresses are indicated by the dashed lines in figures 8 and 9.

## REFERENCES

1. Kuhn, Paul, and Moggio, Edwin M.: Stresses around Large Cut-Outs in Torsion Boxes. NACA TN 1066, 1946.

2. Duberg, John E.: A Numerical Procedure for the Stress Analysis of Stiffened Shells. Jour. Aero. Sci., vol. 16, no. 8, Aug. 1949, pp. 451-462.

3. Kuhn, Paul, Duberg, John E., and Diskin, Simon H.: Stresses around Rectangular Cut-Outs in Skin-Stringer Panels under Axial Loads - II. NACA ARR 3J02, 1943.

TABLE 1.- BASIC DATA

| Item | Case | | | |
|---|---|---|---|---|
| | 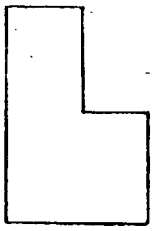 1 | 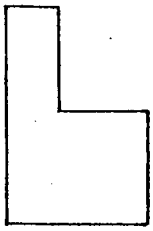 2 | 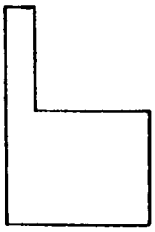 3 | 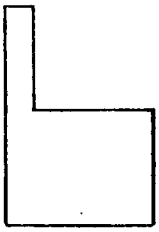 5 (a) |
| a, inches . . . . . | 36.75 | 35.5 | 35.5 | 34.0 |
| b, inches . . . . . | 25.70 | 25.70 | 25.70 | 25.70 |
| $b_1$, inches . . . . . | 11.12 | 6.62 | 2.12 | 2.12 |
| $b_2$, inches . . . . . | 7.29 | 9.54 | 11.79 | 11.79 |
| c, inches . . . . . | 10 | 10 | 10 | 10 |
| d, inches . . . . . | 24.5 | 24.5 | 24.5 | 26.0 |
| t, inches . . . . . | 0.063 | 0.063 | 0.063 | 0.063 |
| $\bar{y}_1$, inches . . . . . | 2.297 | 1.039 | 0.191 | 0.191 |
| $\bar{y}_2$, inches . . . . . | 8.823 | 5.581 | 1.929 | 1.929 |
| $A_1$, square inches . . . | 1.936 | 1.727 | 1.517 | 1.517 |
| $A_2$, square inches . . . | 0.575 | 0.345 | 0.135 | 0.135 |
| $A_3$, square inches . . . | 1.306 | 1.746 | 2.166 | 2.166 |
| I, inches$^4$ . . . . . | 36.75 | 10.03 | 1.01 | 1.01 |
| T, pound-inches . . . . | 99,750 | 92,700 | 71,300 | 64,120 |
| k . . . . . | 0.546 | 0.625 | 0.869 | 0.969 |

[a]Case 5 has much more rigid torque-transfer bulkheads than the other cases.

NACA

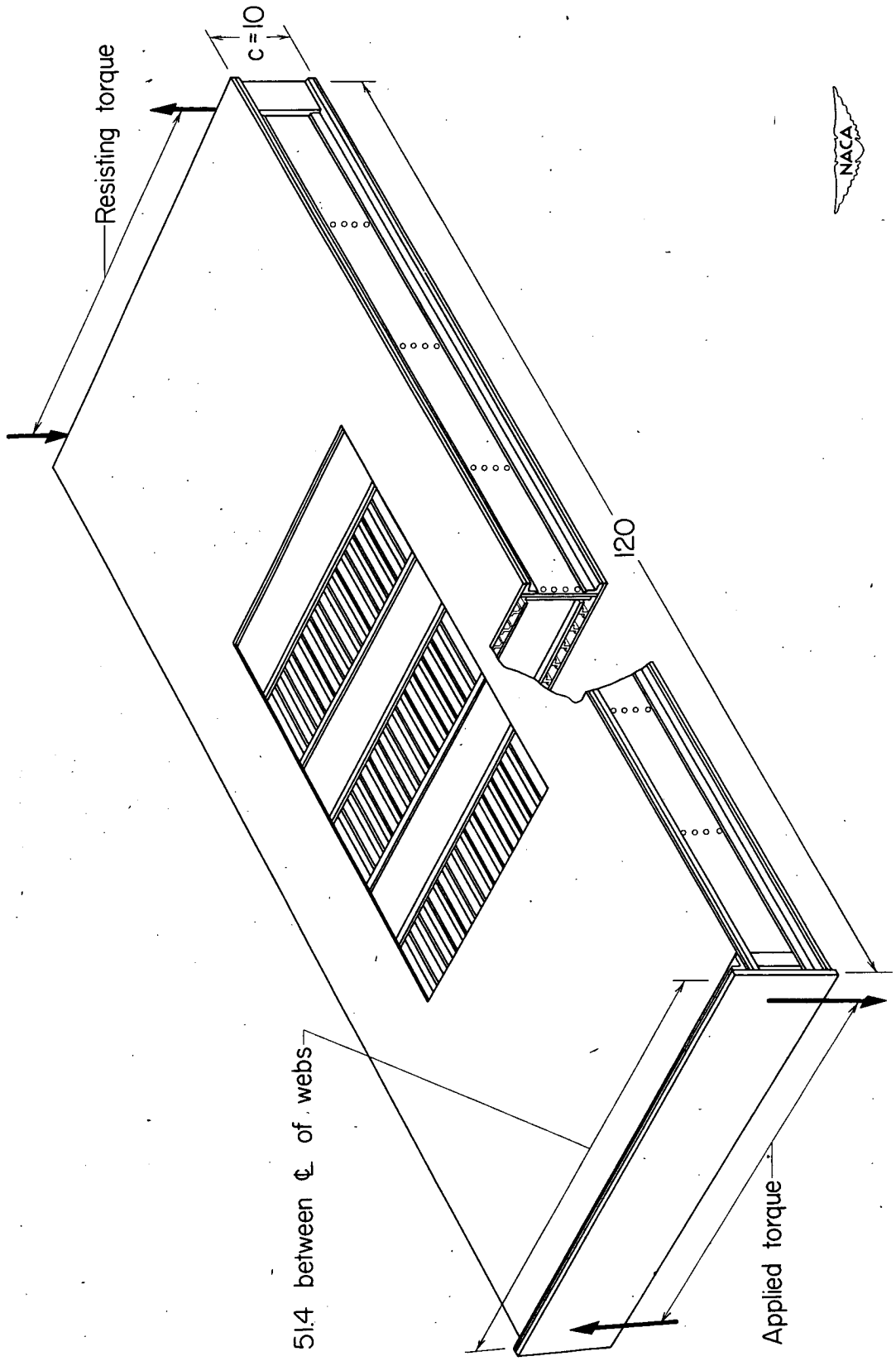


Figure 1. - Torsion test box.

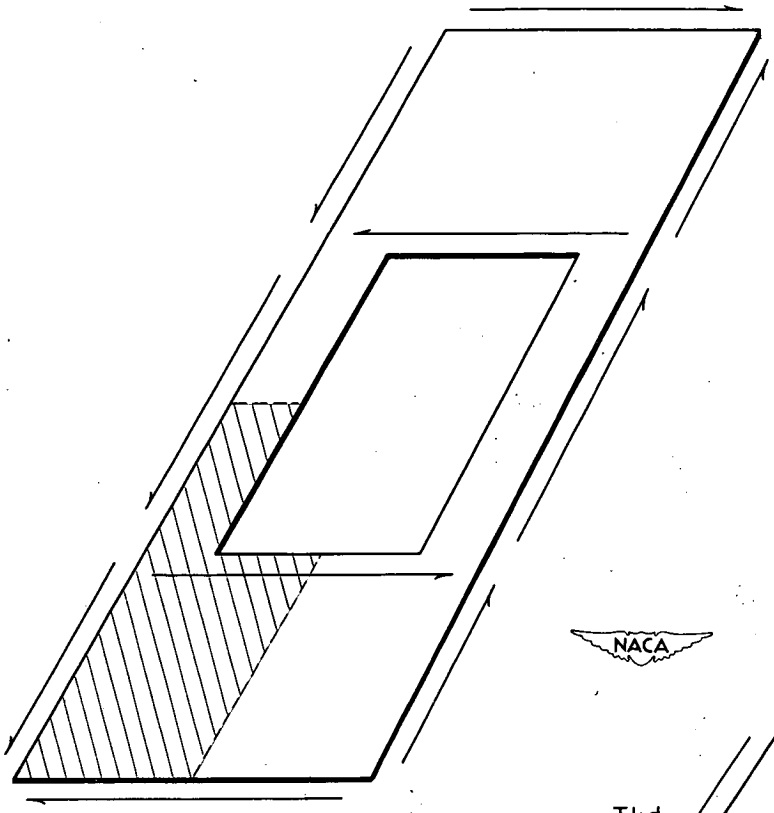

Figure 2. - Cover of torsion box showing external forces.

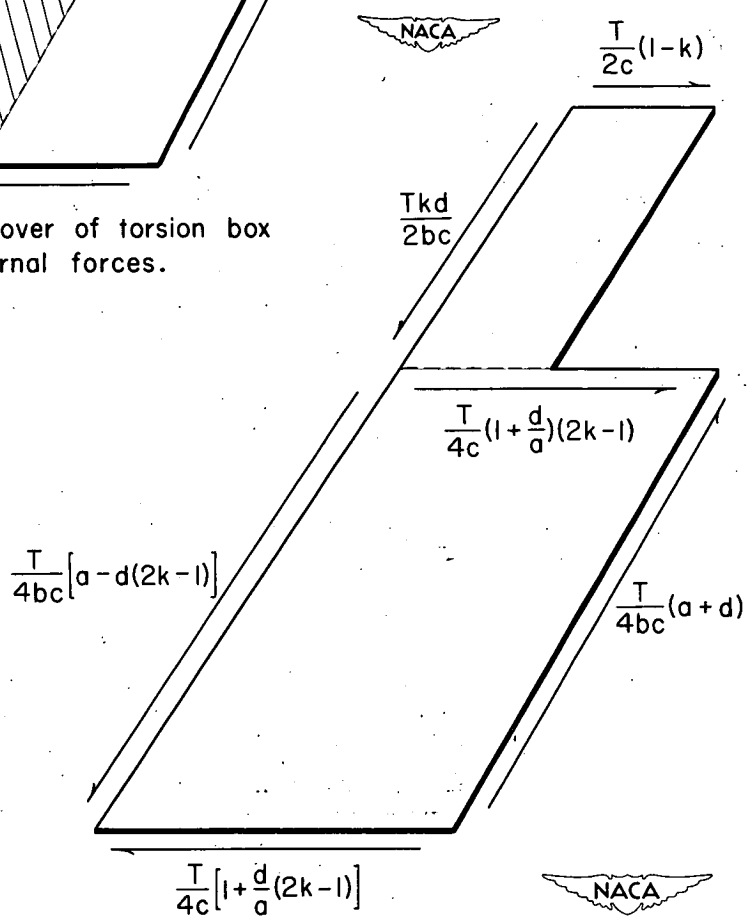


Figure 3. - Quarter section of torsion-box cover indicating external forces.

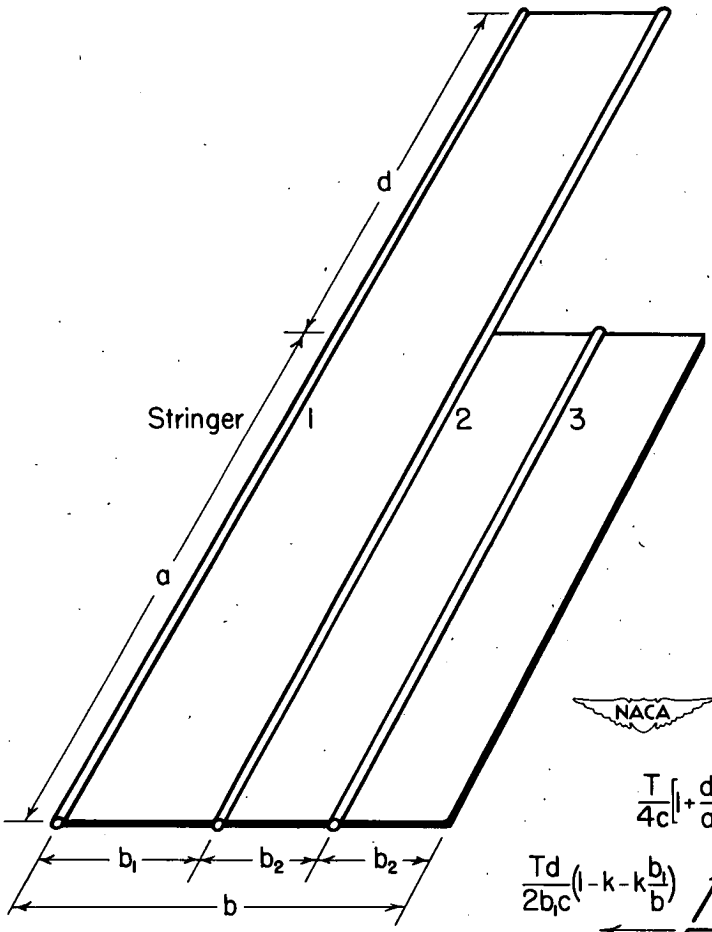


Figure 4.- Quarter of idealized torsion-box cover.

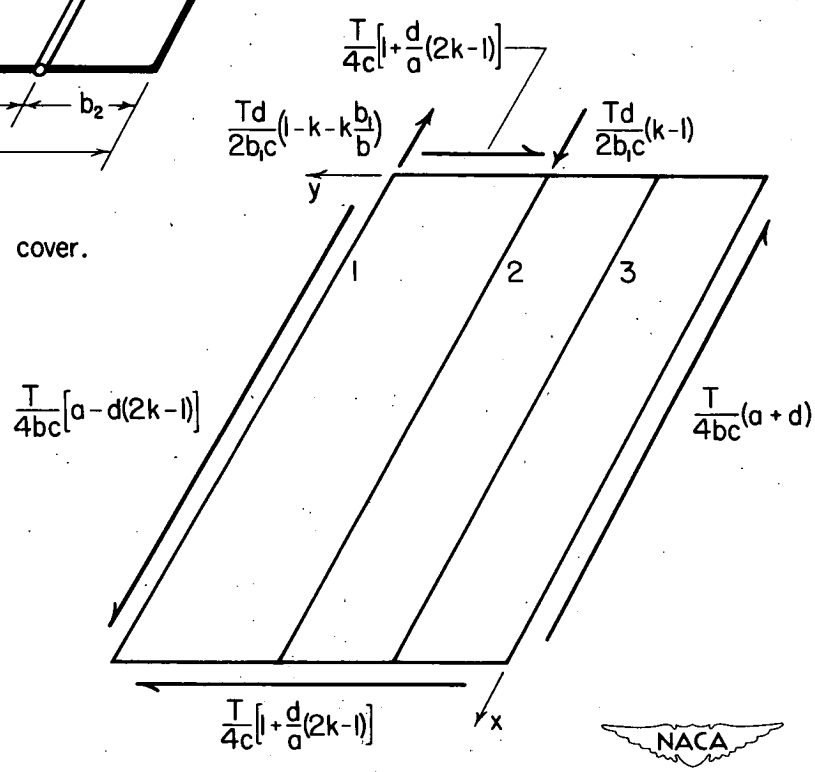


Figure 5.- External loading system and coordinate axes for gross section of idealized structure.

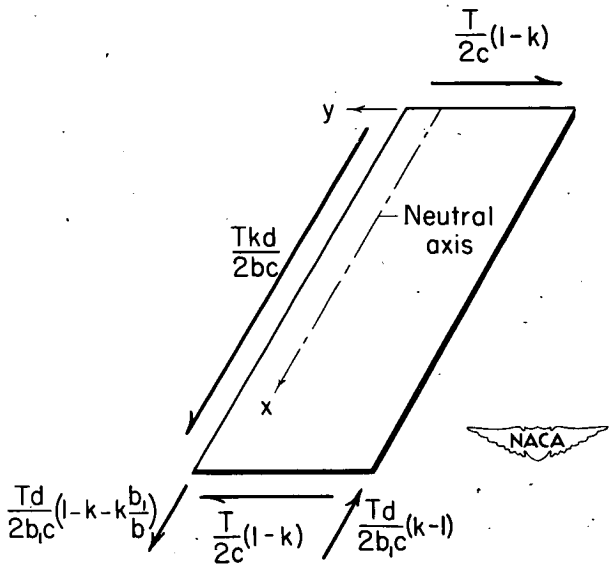


Figure 6.- External loading system and coordinate axes for net section.

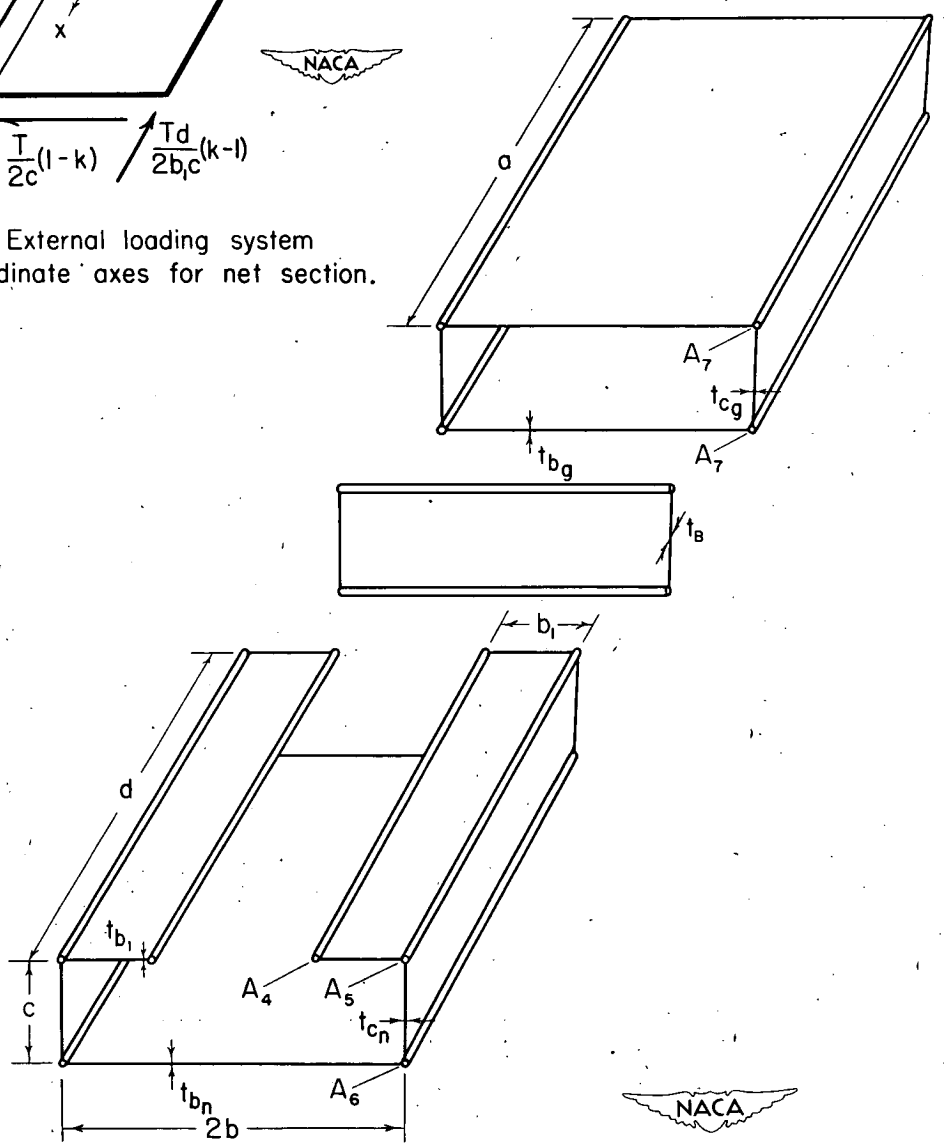


Figure 7.- Exploded view of simplified box.

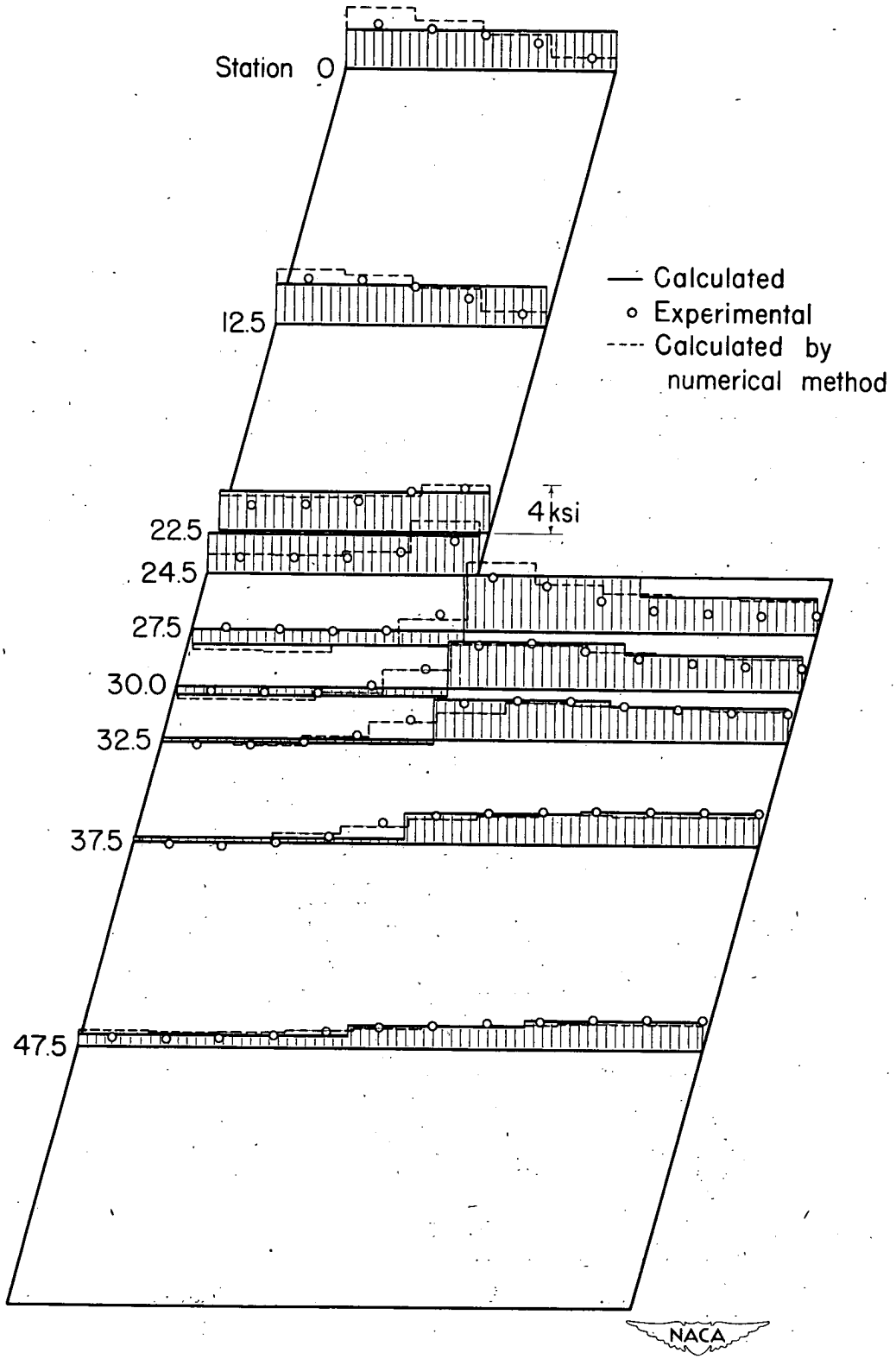


Figure 8. - Shear stress in top cover. Case I.

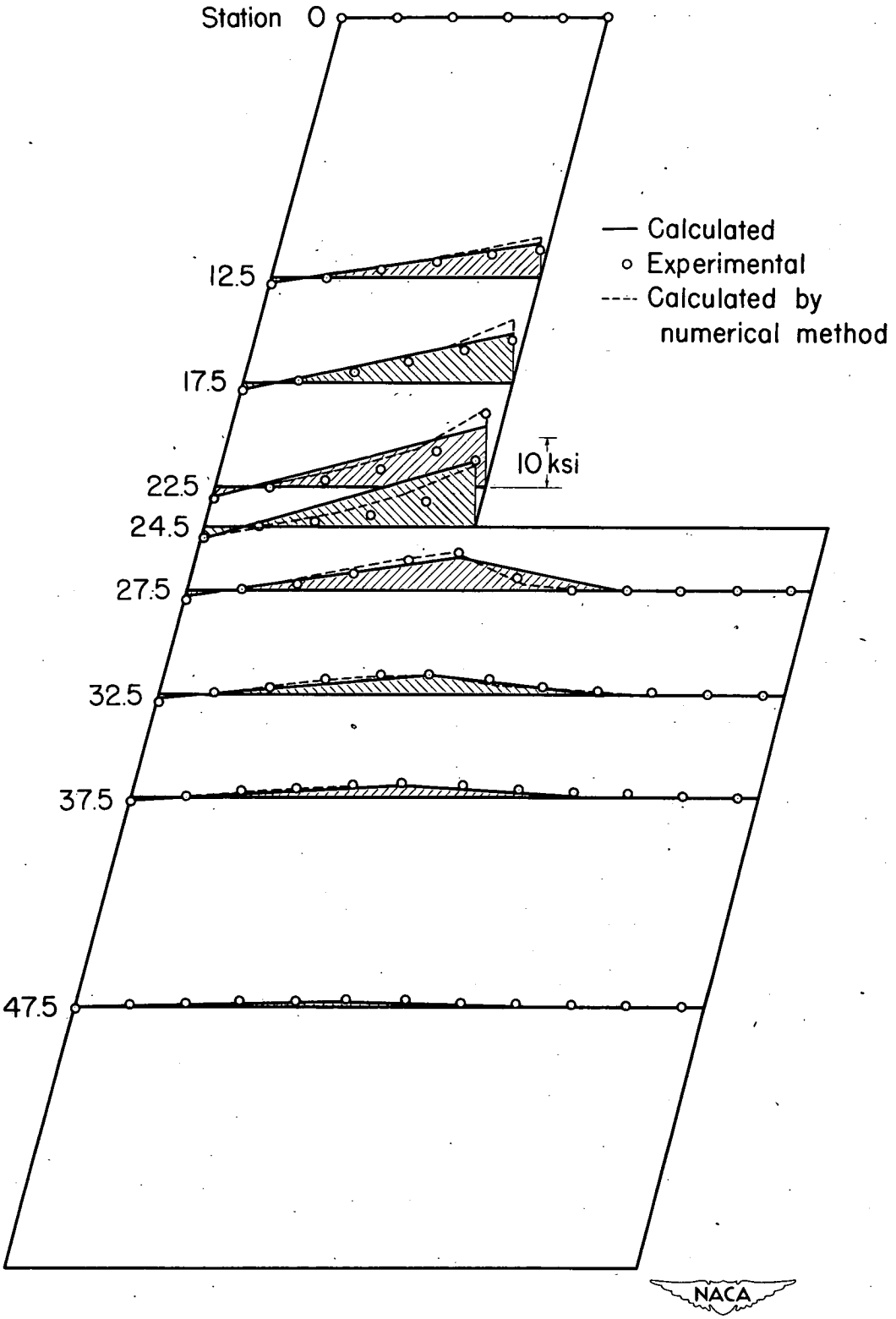


Figure 9.- Stringer stress in top cover. Case I.

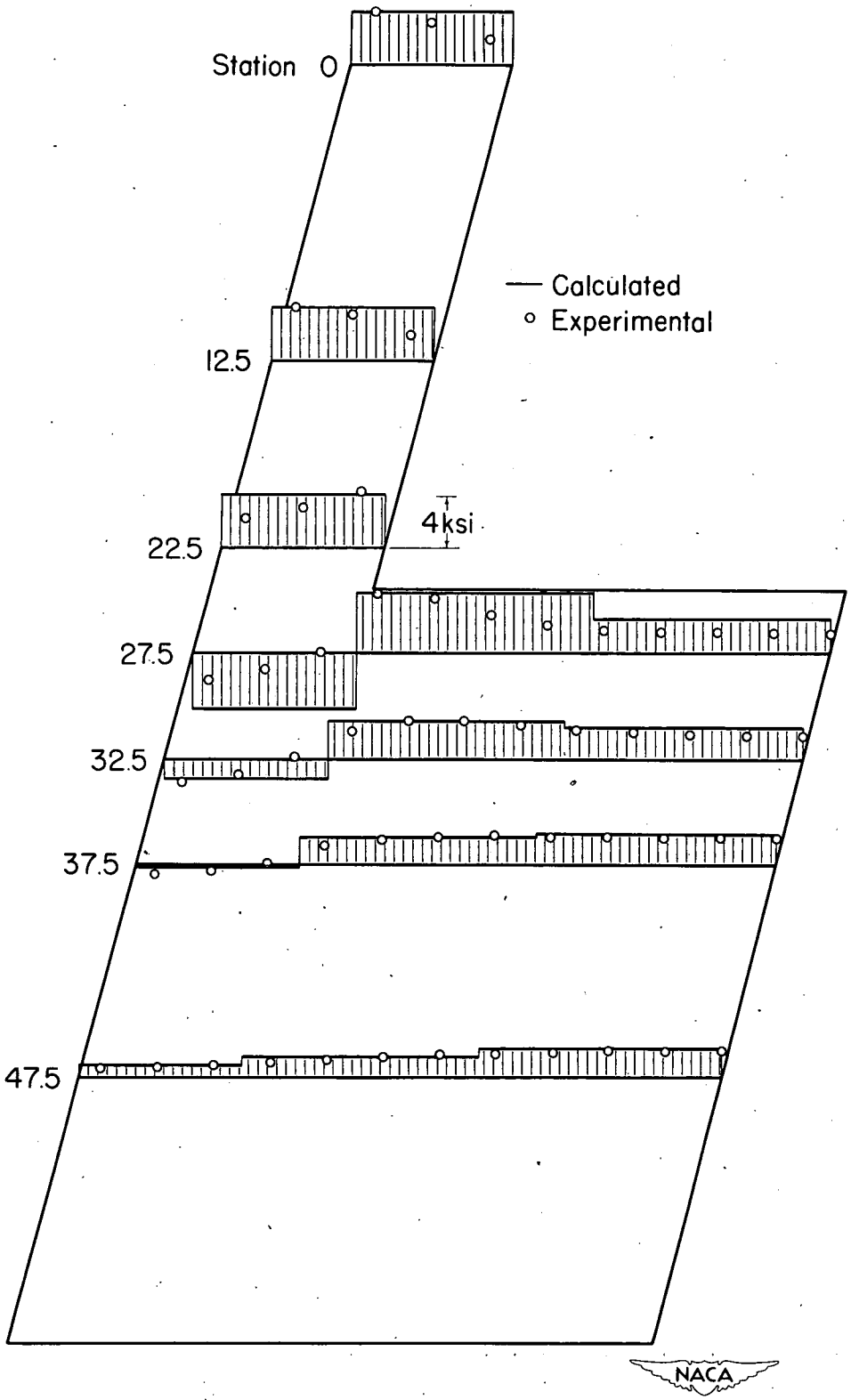


Figure 10.- Shear stress in top cover. Case 2.

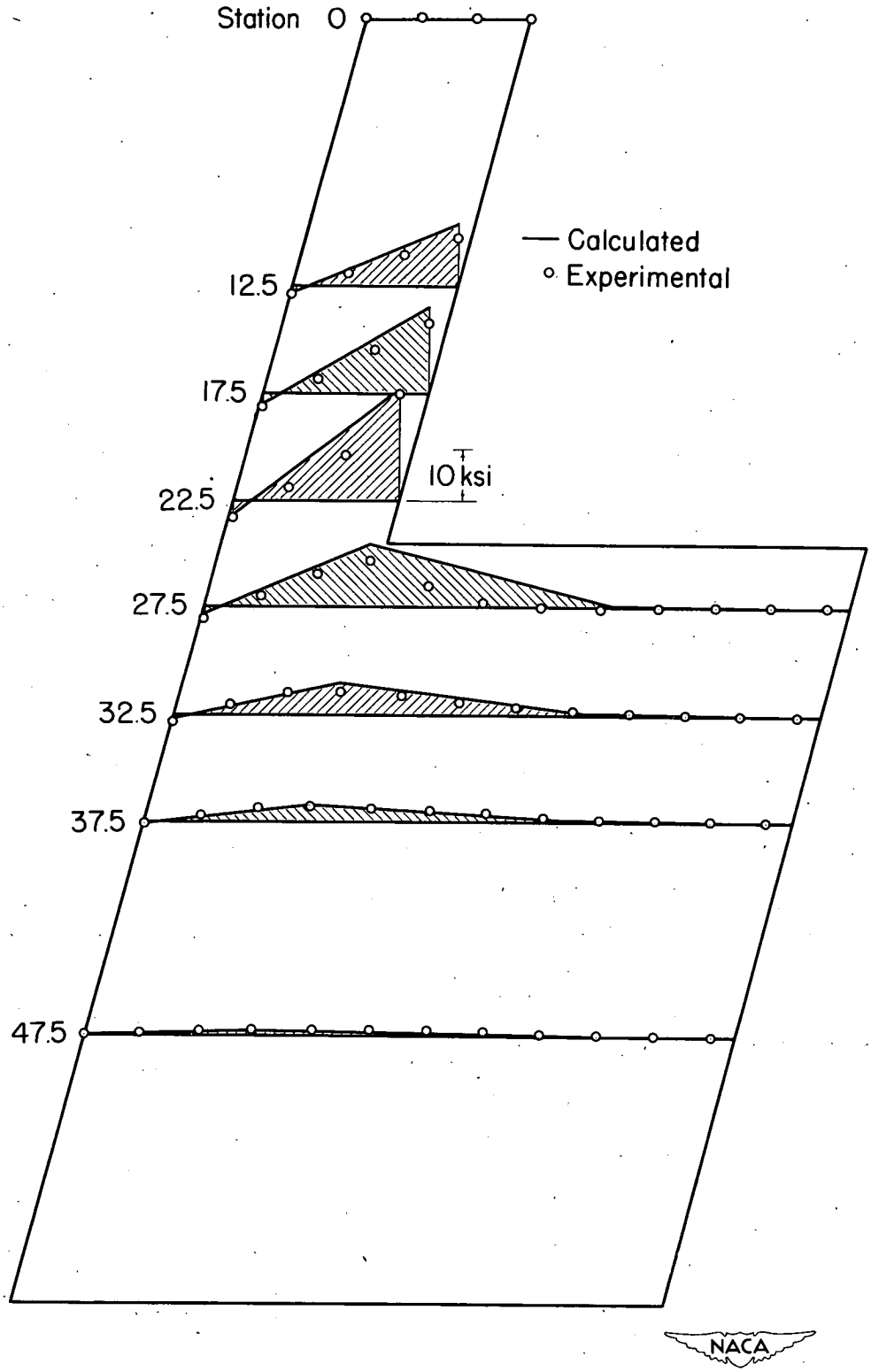


Figure 11.- Stringer stress in top cover. Case 2.

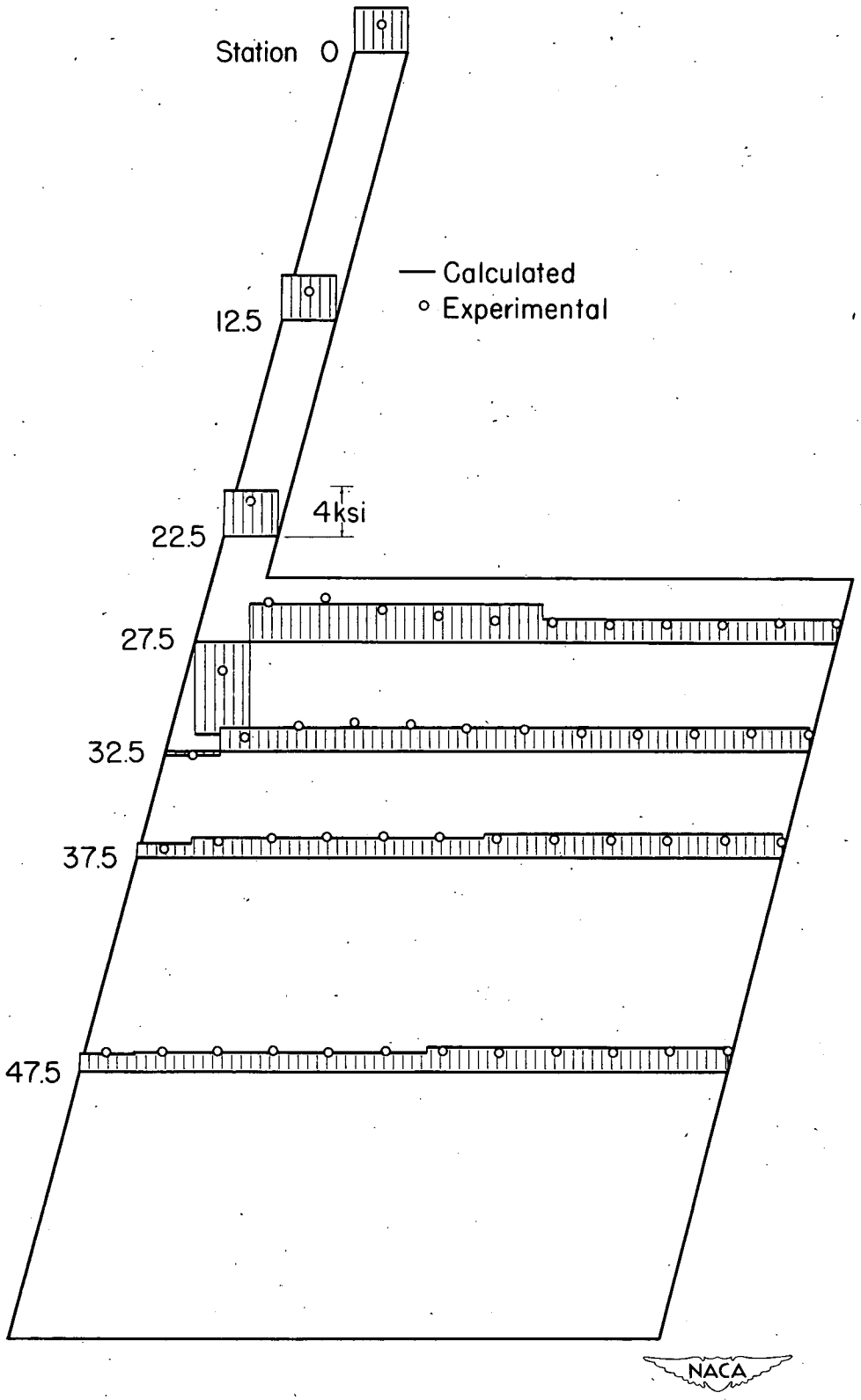


Figure 12.- Shear stress in top cover. Case 3.

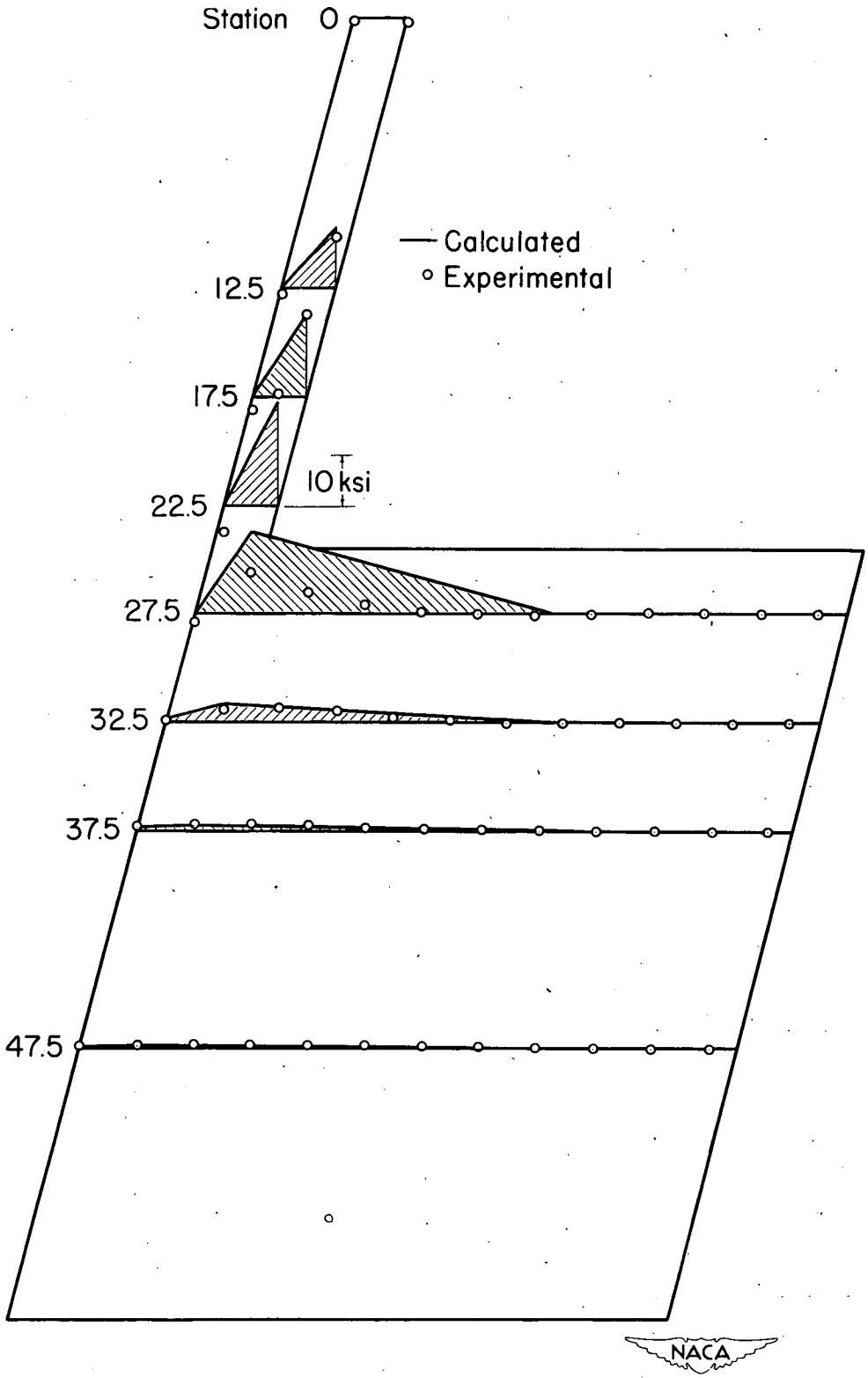


Figure 13.- Stringer stress in top cover. Case 3.

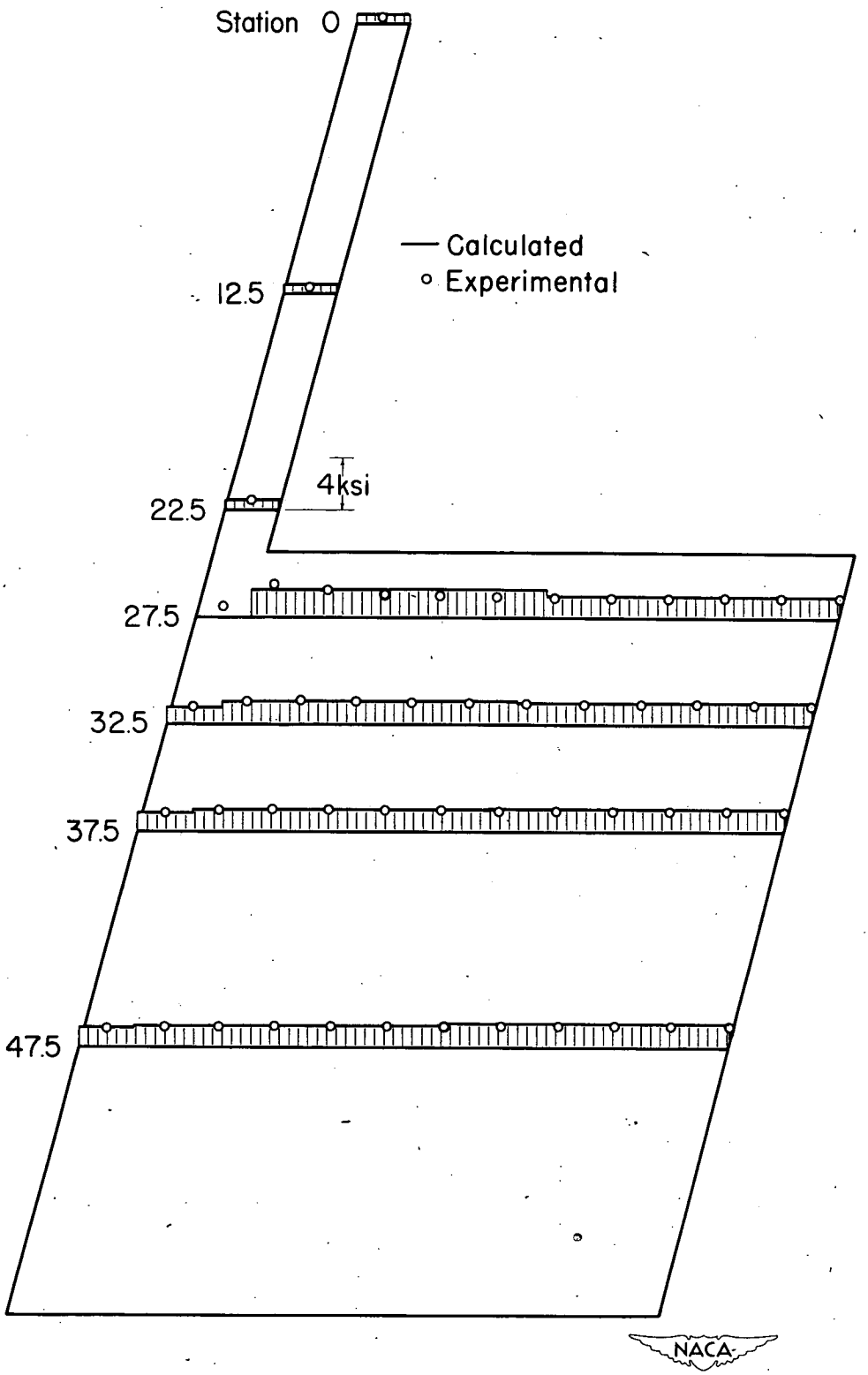


Figure 14.- Shear stress in top cover. Case 5.

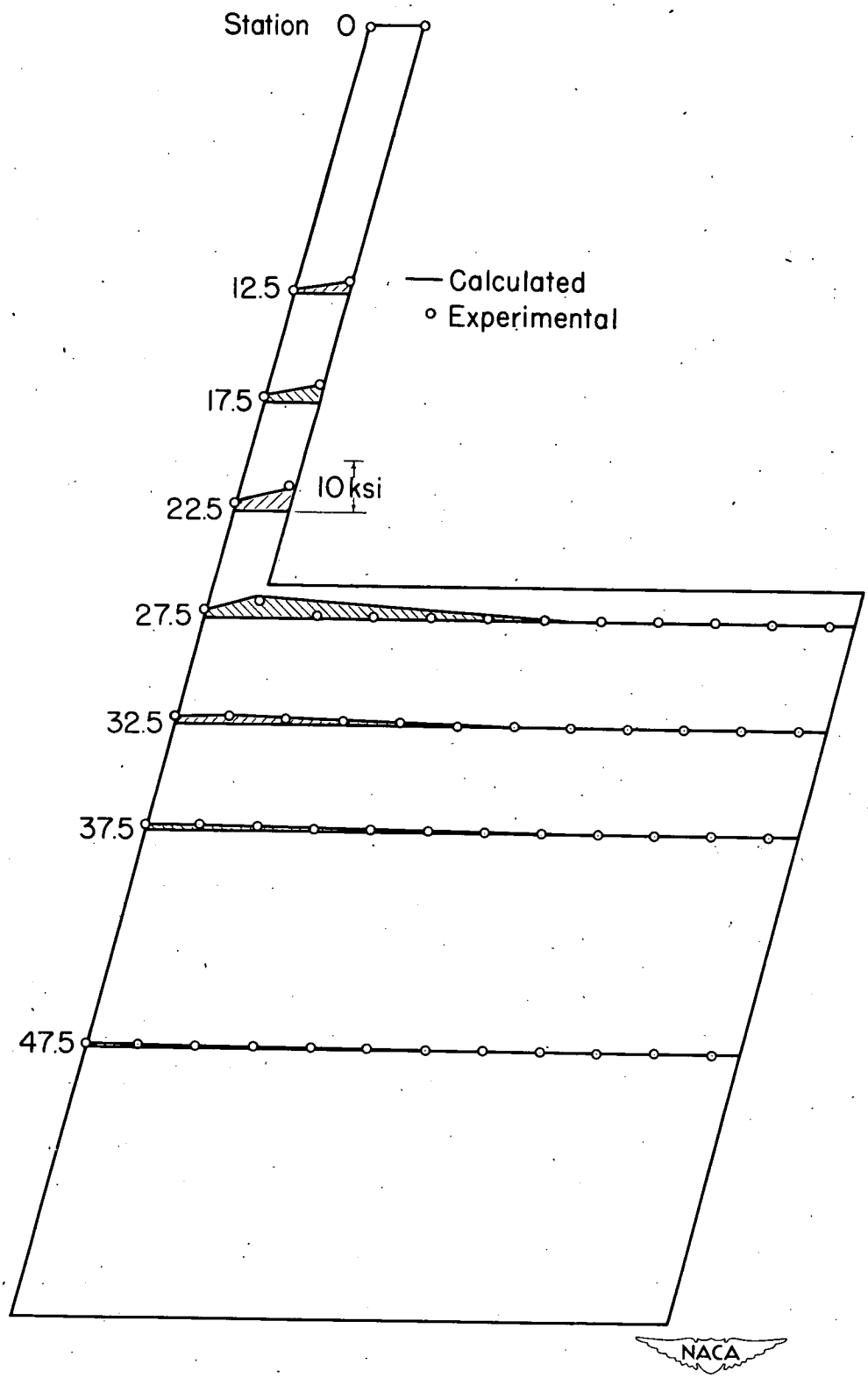


Figure 15.- Stringer stress in top cover. Case 5.

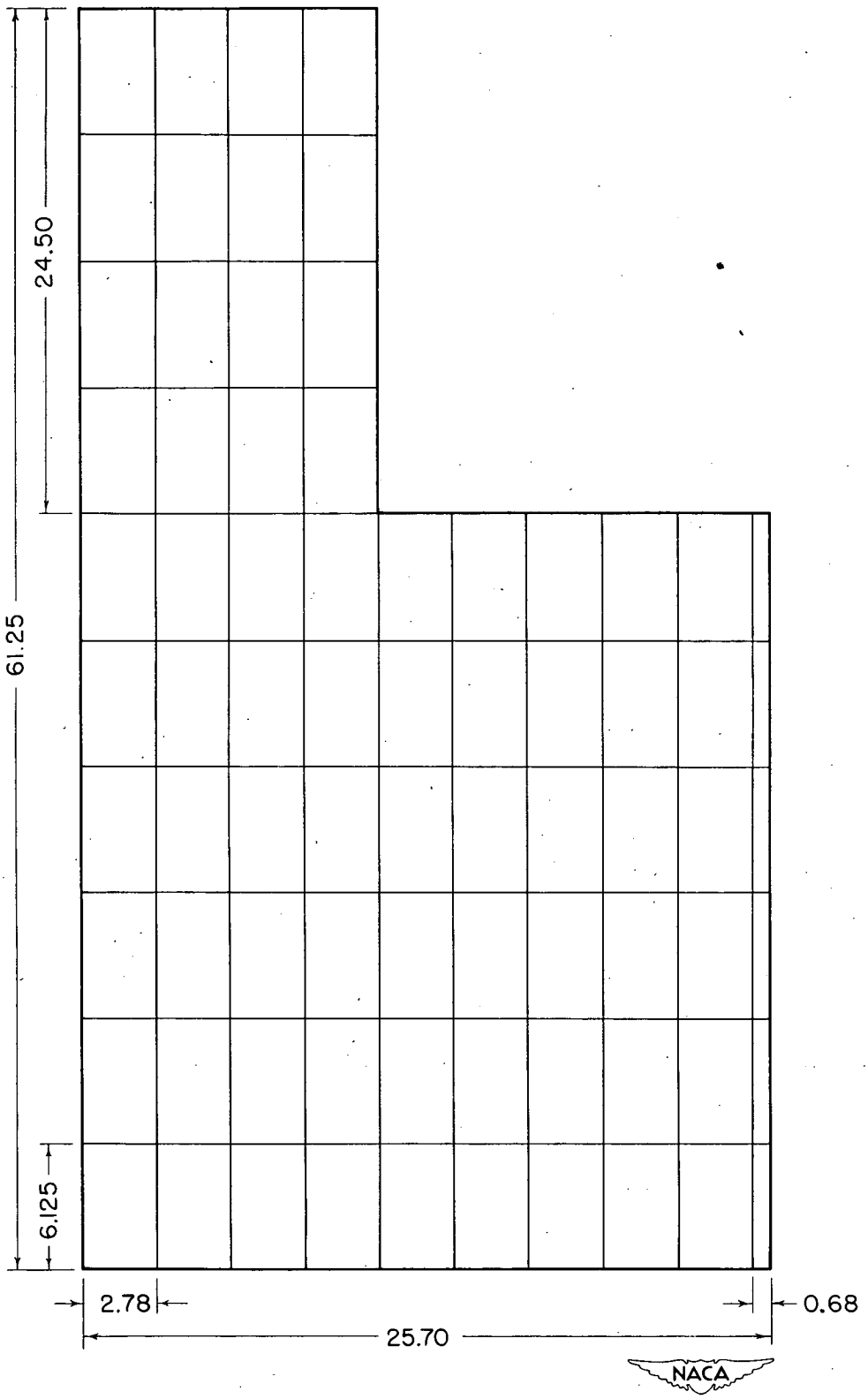


Figure 16.- Idealized cover for numerical method.