NATIONAL ADVISORY COMMITTEE FOR AERONAUTICS

TECHNICAL NOTE 2485

PILOT ESCAPE FROM SPINNING AIRPLANES AS DETERMINED FROM FREE-SPINNING-TUNNEL TESTS

By Stanley H. Scher

Langley Aeronautical Laboratory
Langley Field, Va.

Washington
October 1951

NATIONAL ADVISORY COMMITTEE FOR AERONAUTICS

TECHNICAL NOTE 2485

PILOT ESCAPE FROM SPINNING AIRPLANES AS DETERMINED FROM FREE-SPINNING-TUNNEL TESTS[1]

By Stanley H. Scher

SUMMARY

Pilot-escape tests have been made for 21 models of fighter, torpedo-bomber, scout-bomber, and trainer airplanes spinning in the Langley 20-foot free-spinning tunnel. A model of a pilot was released from the outboard side (left side in a spin to the pilot's right) and from the inboard side of the cockpit of each model during both flat and steep spins, and the subsequent relative paths of the model and pilot were observed.

Analysis of the test results indicated that, if a pilot finds it necessary to leave a spinning airplane, it would generally be better for him to bail out of the outboard side of the cockpit than to bail out of the inboard side. For airplanes with cockpits located forward of the leading edge of the wing, the pilot's chances of clearing all parts of the airplane by bailing out appeared to be poorer than for airplanes with cockpits located rearward of the leading edge of the wing. It was found that the path followed by a man after leaving a spinning airplane can be calculated if the angle of attack and the rates of descent and rotation of the airplane are known. For the types of airplanes covered by this experimental investigation, analysis indicates that the centrifugal force which would act on a pilot during a spin would probably not prevent him from leaving the cockpit.

INTRODUCTION

Safe pilot exit from aircraft during an emergency in flight is a problem of great importance. This problem includes safe escape from spinning airplanes. Tests in which models of pilots were released from spinning airplane models have been made in the Langley 20-foot free-spinning tunnel in connection with spin tests of models of specific service airplanes. The results of these tests have been collected and analyzed in an attempt to establish a criterion for determining from which side the pilot of a spinning airplane should attempt an emergency escape.

---

[1]Supersedes the recently declassified NACA RM L8D28, "Pilot Escape from Spinning Airplanes as Determined from Free-Spinning-Tunnel Tests" by Stanley H. Scher, 1948.

Twenty-one models were tested, covering a range of low-wing and midwing military airplanes considered to be in the spinning category. One of the models tested had a 35° sweptback wing. For the tests, a pilot model was released from the fuselage at the outboard side (left side in a spin to the pilot's right) and then at the inboard side of the cockpit of each model during both flat and steep spins, and the subsequent path taken by the pilot was noted. For two of the models tested, the pilot was released from two fuselage positions corresponding to alternate cockpit locations on the airplane.

Calculations were made of the approximate path taken by the pilot relative to a typical spinning airplane for comparison with the model test results.

The centripetal accelerations that would act on pilots during spins of the airplanes simulated were calculated and compared with available experimental data which show the limitation of such forces on a man's ability to move his body in a direction similar to that required in bailing out of an airplane.

SYMBOLS

Airplane symbols:

b	wing span, feet
S_w	wing area, square feet
$\bar{c}$	mean aerodynamic chord, feet
$x/\bar{c}$	ratio of distance of center of gravity rearward of leading edge of mean aerodynamic chord to mean aerodynamic chord
$z/\bar{c}$	ratio of distance between center of gravity and fuselage reference line to mean aerodynamic chord, positive when center of gravity is below fuselage reference line
m	mass of airplane, slugs
I_X, I_Y, I_Z	moments of inertia about X, Y, and Z body axes, respectively, slug-feet^2
ρ	air density, slugs per cubic foot
μ	relative density of airplane $\left(\frac{m}{\rho S_w b}\right)$

α angle between fuselage reference line and vertical axis of the tunnel (approx. equal to absolute value of angle of attack at plane of symmetry), degrees

V_a full-scale true rate of airplane vertical descent, feet per second

Ω full-scale angular velocity of airplane about spin axis, revolutions per second or radians per second

Pilot symbols:

D drag of pilot, pounds

S_p frontal area of pilot, square feet

C_{D_v} vertical drag coefficient of pilot $\left(\frac{D}{\frac{\rho}{2}V_v^2 S_p}\right)$

C_{D_h} horizontal drag coefficient of pilot $\left(\frac{D}{\frac{\rho}{2}V_h^2 S_p}\right)$

V_v instantaneous vertical velocity of pilot, feet per second

V_h instantaneous horizontal velocity of pilot, feet per second

V_t terminal vertical velocity of pilot at 15,000 feet (202 ft/sec)

R distance from spin axis to pilot, feet

g standard acceleration due to gravity (32.17 ft/sec^2)

W weight of pilot and parachute (200 lb)

a_v vertical component of acceleration of pilot during descent, feet per second per second

a_h horizontal component of acceleration of pilot during descent, feet per second per second

t increment of time, seconds

Δs_v vertical component of path traveled by pilot in increment of time, feet

Δs_h horizontal component of path traveled by pilot in increment of time, feet

a_c centripetal acceleration acting on pilot during steady spin of airplanes simulated in model tests

APPARATUS AND METHODS

Models

The models used for the tests were models of military airplanes, ranging in scale from 1/25 to 1/14, and were prepared for testing by the Langley Laboratory. Three-view sketches of the models tested with full-scale dimensions of the airplanes represented are shown in figure 1. Propellers were not simulated on any of the models because a previous investigation has indicated that windmilling propellers have little effect on model spin and recovery characteristics. Propellers have, however, been included in the sketches of figure 1 for the purpose of aiding in the interpretation and application of the pilot-escape test results. The pilot models were built of wood and were scaled down in dimensions and weight according to the scale of their respective models to represent an average pilot and parachute (200 lb).

Most of the airplane models and the pilot models were ballasted with lead weights to obtain dynamic similarity to the respective airplane and pilot at an altitude of 15,000 feet (ρ = 0.001496 slug/cu ft). For model 10, however, a test altitude of 10,000 feet was used because of the relatively low service ceiling of the simulated airplane. For models 11, 12, and 17, test altitudes of 25,000, 20,000, and 20,000 feet, respectively, were used because heavy model construction made it impractical to ballast these models to simulate the airplanes at 15,000 feet.

A remote-control mechanism was installed in the models to release the pilot.

Wind-Tunnel and Testing Technique

The tests were performed in the Langley 20-foot free-spinning tunnel, the operation of which is similar to that of the Langley 15-foot free-spinning tunnel described in reference 1, except that the models are launched by hand with spinning rotation rather than launched by spindle.

For the pilot-escape tests, the tunnel vertical air-stream velocity was adjusted to support the free-spinning airplane model. A model is shown spinning in the Langley 20-foot free-spinning tunnel in figure 2. The pilot model was secured outside the fuselage structure of each spinning

model at the outboard and again at the inboard canopy juncture. The pilot was merely released from these positions while the model was in a flat spin and again while in a steep spin. Consideration was given to the method of forcibly ejecting the model pilot to simulate a possible jumping force that a man might be able to exert, but the results of such tests would probably present no better indication of proper bail-out procedure than the simpler pilot-release tests. Because the high rate of vertical descent of some of the models during steep spins exceeded the airspeed available in the tunnel, the final steep spin attitude could not be obtained; thus, the pilot model was released while the model descended in the tunnel and before all the applied launching rotation had been damped. Moving pictures were made of all the tests.

After each release, the path taken by the pilot with respect to the model was noted until the pilot was definitely clear of all parts of the model surfaces or until he had been struck by a part of the model. In addition, in analyzing the results of the tests of the designs which included propellers, consideration was given to the path of the pilot relative to the propeller disk. For those conditions in which the pilot, upon being released from a given side of the cockpit, was observed to clear all parts of a model in a consistent manner by a margin of at least 3 feet (full scale), a man could probably make a safe escape from the corresponding full-scale airplane by bailing out of the same side of the cockpit. Results were considered consistent if the pilot's path relative to the model did not vary for at least four releases for each condition tested.

TEST CONDITIONS

The steady-spin parameters which were obtained in the Langley 20-foot free-spinning tunnel for the model spinning conditions for which the pilot-release tests were made are presented in table I in terms of the full-scale airplane values. Information is presented in table II which shows the range of mass characteristics of the models used during the tests and which may be useful in applying the test results to various airplane designs not specifically covered in the present investigation. As noted in references 2, 3, and 4, model tests have indicated that the amount and the arrangement of mass in an airplane usually influences its spinning characteristics, and the tests and analysis of the present investigation indicate that the spinning characteristics in turn affect the exact path a man's body would follow if he bailed out of an airplane during a spin.

The control surfaces of the airplane models were adjusted and held constant at values within the maximum ranges of control deflections for the airplanes represented in such a manner as to obtain the flat and steep spins desired for making the pilot-release tests.

RESULTS AND DISCUSSION

The results of the model pilot-release tests are presented in table III. Inasmuch as the location of the cockpit with respect to the wing greatly influenced the results, the experimental tests are discussed in two sections, which correspond to models with cockpits located rearward and forward, respectively, of the fuselage juncture of the leading edge of the wing.

Experimental Results with Cockpit Rearward of Wing Leading Edge (Models 1 to 13)

Pilot release from outboard side of spinning model.- When the pilot was released during both flat and steep spins from the outboard side of a cockpit located rearward of the wing leading edge (models 1 to 13), the paths the pilot followed were generally similar. When the vertical descent velocity of the spinning model was greater than the terminal velocity of the released pilot, the pilot decelerated and went above the airplane model; when the vertical descent velocity of the spinning model was less than the terminal velocity of the released pilot, the pilot accelerated and went below the airplane model. The horizontal motion of the pilot carried him over the trailing edge of the outboard wing near the fuselage and under the rear part of the fuselage or under the outboard side of the horizontal tail which passed over the pilot as the model continued to rotate. Usually, the released pilot cleared the helical cylinder being described by the rotating descending airplane model within one-half turn of the model. A typical test made with the pilot released from the outboard side of the cockpit of model 5 during a right spin is shown in the moving-picture strips of figure 3. The pilot went off the trailing edge of the outboard wing (frame 15, pilot hidden from camera), either under the rear part of the fuselage or under the outboard side of the horizontal tail (frame 18), and out of the helical cylinder (frames 23 to 28), and thereby cleared all parts of the model.

In model 7, the rear cockpit is located so far rearward of the leading edge of the wing that this cockpit is very close to the tail section. The pilot, when released from the rear cockpit, passed closer to the bottom of the horizontal tail surface than when released from the front cockpit.

Pilot release from inboard side of spinning model.- When the pilot was released during flat spins from the inboard side of the cockpit of models 1 to 13, there was apparently some air-stream shielding effect on the pilot brought about by his position relative to the inboard wing and the fuselage. For those models which had rates of vertical descent greater than the terminal velocity of the falling pilot during flat spins, the resulting flow conditions affected the forces acting on the pilot in such

a manner that the pilot, when released from the inboard side, did not immediately rise above and go outboard from the model as he did when released from the outboard side. Instead, the pilot descended at about the same rate as the model for an average of about three-eights of a turn of the model after the release of the pilot; then, the pilot went upward and outward from the model. For those models which had rates of vertical descent less than that of the falling pilot during flat spins, the resultant forces acting on the pilot likewise prevented him from moving outward until after about three-eighths of a turn of the model subsequent to the pilot release. Regardless of whether the models in the flat spins had rates of vertical descent higher or lower than that of the falling pilot, the resultant force caused the pilot to move initially toward the nose of the spinning models in a manner which indicated that, if the airplane represented by the model was equipped with a single tractor propeller, a pilot jumping from the inboard side of the cockpit would have gone through or passed very close to the propeller disk. The moving-picture strips of figure 4 show a typical result obtained when the pilot was released from the inboard side of the cockpit of model 5 during a flat right spin. The pilot, after being released (frame 2), went into the region of the propeller disk (frames 11 to 13). In some cases, after at first moving toward the nose and the propeller disk, the pilot went over the fuselage while the model continued to rotate. The pilot then tended to follow a path generally similar to those taken by the pilot leaving from the outboard side. The initial delay in going outward, however, which resulted when the pilot was released from the inboard side, caused the pilot to come close to parts of the model that he cleared by large margins when released from the outboard side. For example, it may be seen in figure 4 that after leaving the region of the propeller disk, the pilot was nearly struck by the leading edge of the outboard wing as he passed under the wing (frame 19); also, it may be seen in figure 5 that the pilot, when released during a flat left spin from the inboard side of the cockpit of model 6 (frame 18), went slightly forward (frame 25) and then went over the outboard wing and was struck by the outboard side of the horizontal tail (frame 31).

When the pilot was released from the inboard side of the cockpit of models 1 to 13 during steep spins in which the rate of descent of the model was considerably greater than the rate of descent of the freely falling pilot, the results obtained indicate that the chief tendency of the released pilot was to go over the fuselage of the rotating model, up and back toward the tail section, and then out of the helical cylinder being described by the model. For models 5, 9, and 11 to 13, this path brought the pilot into contact with the rearward part of the fuselage or with the outboard side of the horizontal tail in the manner similar to that already discussed for the flatter spin and shown in figure 5. For model 10, even though the model was spinning at a steep attitude, its

comparatively low rate of vertical descent caused the pilot, when released from the inboard side, to drop through the region of the propeller disk.

Procedure for pilot escape.- The procedure recommended for escaping during a spin from an airplane in which the pilot leaves from a cockpit located rearward of the leading edge of the wing is as follows: (1) Leave from the outboard side of the cockpit and attempt to go over the top of the outboard wing and off the trailing edge of the wing and (2) leave in a crouched attitude in order to aid in clearing the under surface of the outboard side of the horizontal tail.

Experimental Results with Cockpit Forward of Wing Leading Edge (Models 14 to 21)

Pilot release from outboard side of spinning model.- For three of the models (15 to 17) when the pilot was released during both flat and steep spins from the outboard side of a cockpit located forward of the wing leading edge, the pilot cleared the model satisfactorily in a manner similar to that in which he cleared models 1 to 13. For five of the models (14 and 18 to 21) when the pilot was released from flat spins, he cleared the model in a manner almost similar to the manner in which he cleared models 1 to 13. The differences were that for models 14, 18, 20, and 21, the pilot went under instead of over the outboard wing, and for model 19, the pilot brushed against the top surface of the outboard wing while going over it. The results obtained with model 21, which had a 35° sweptback wing, did not indicate any appreciable differences due to the sweepback. When the pilot was released during steep spins from models 14, 19, and 20, the results indicate that it was possible for the pilot to go over, to go under, or to hit the leading edge of the outboard wing. The moving-picture strips of figure 6 show a typical release of a pilot from the outboard side of the cockpit of model 20 during a steep right spin. The pilot, after being released (frame 17), was struck by the leading edge of the outboard wing (frames 20 and 21).

Pilot release from inboard side of spinning model.- When the pilot was released during flat spins from the inboard side of the cockpit of models 14 to 21, the pilot went over the fuselage to the outboard side while the model continued to rotate under him. The resultant path of the pilot then tended to be somewhat similar to the path taken when released from the outboard side; the initial motion of the pilot in going over the fuselage of the model, however, caused the path of the pilot to be displaced from the path taken when released from the outboard side. As a result, for models 15, 17, and 19, the pilot was struck by the outboard side of the horizontal tail; for model 14 the pilot went into the region of the propeller disk; and for model 16 the pilot went either close over or close under the outboard wing.

When the pilot was released during steep spins from the inboard side of the cockpit of five of the models (14 to 16, 19, and 20), the pilot went over the fuselage. His path was thus displaced from the path taken when released from the outboard side. As a result, the pilot was either struck by or came very close to the horizontal tail. The moving-picture strips of figure 7 show a typical pilot release from the inboard side of the cockpit of model 20 during a steep right spin. After being released (frame 14), the pilot went over the fuselage and was struck by the outboard side of the horizontal tail (frames 42 and 43).

Procedure for pilot escape.- For spinning airplanes in which the pilot is located forward of the leading edge of the wing, bailing out from either side of the cockpit appears dangerous. If the pilot were to leave from the outboard side of the cockpit, however, he would probably have a better chance of making a safe escape than if he were to leave from the inboard side, particularly if he can jump in a direction that would enable him to avoid being struck by the outboard wing. For airplane designs similar to models 14 to 21, which include many high-speed jet- and rocket-powered airplanes, it may be advisable as a safety factor to provide for an ejection-seat or a capsule system which would throw the pilot safely away from the spinning airplane, or to make provisions which would enable the pilot to move to a more rearward location from which he could bail out with a better chance of clearing the outboard wing.

Calculated Results of Pilot's Path Relative to Spinning Airplane

An attempt has been made to show that when the steady-spin parameters of an airplane can be determined from model tests or estimated from design data, the relative paths of the spinning airplane and of a man upon abandoning the airplane can be estimated. Estimates of the relative paths have been plotted for two spinning conditions of an airplane, typical of those considered in the present investigation. For simplicity in calculating the approximate paths of the man's body falling relative to the airplane, an assumption of independent horizontal and vertical motions was made. Reference 5 indicates that, for the brief period of 1 or 2 seconds following bail-out, this assumption gives a very close approximation to the relative paths of an airplane and of a man after having bailed out of an airplane in level flight; likewise for this brief period, this assumption should give a close approximation to the relative paths of a spinning airplane and of a man after having bailed out of the airplane.

The initial vertical velocity of a falling man just as he leaves a spinning airplane is the same as the rate of descent of the spinning airplane. In estimating the subsequent vertical positions of the man at intervals after leaving the airplane, his resulting acceleration or deceleration as his rate of descent approached terminal velocity was

considered. The terminal vertical velocity of a man's body in a free fall at an altitude of 15,000 feet was taken as approximately 202 feet per second, which corresponds to an average value of 160 feet per second at sea level. (See reference 5.) The assumed terminal velocity of a man in a free fall is in fair agreement with the indicated terminal velocity of the released pilot in the tunnel tests scaled up to full scale; this fact can be seen by a comparison of the full-scale values of model velocities of descent given in table I with the notations in table III concerning the vertical motion of the pilot model with respect to the airplane models after being released.

Applying the equilibrium equation

$$W = D = C_{D_v}\frac{\rho}{2}V_v^2 S_p$$

for the special value of V_v, V_t at 15,000 feet = 202 feet per second, gives

$$200 = C_{D_v}\frac{\rho}{2}(202)^2 S_p$$

Therefore,

$$C_{D_v}\frac{\rho}{2}S_p = \frac{200}{(202)^2} = 0.0049$$

In vertical descent, not at V_t,

$$\frac{W}{g}a_v = W - C_{D_v}\frac{\rho}{2}S_p V_v^2$$

$$a_v = \frac{(200 - 0.0049V_v^2)g}{200}$$

No experimental data were available for use in approximating the horizontal motions of a man after bail-out; a constant frontal area of 8 square feet for a man in a flying suit and a constant drag coefficient of 1.25 (drag coefficient of flat plate normal to wind stream) were assumed:

$$C_{D_h}\frac{\rho}{2}S_p = 1.25 \times \frac{0.001496}{2} \times 8 = 0.00748$$

In horizontal flight,

$$\frac{W}{g}a_h = C_{D_h}\frac{\rho}{2} S_p V_h^2$$

$$a_h = \frac{0.00748 V_h^2 g}{200}$$

The initial horizontal velocity of a man just as he leaves a spinning airplane was determined by $R\Omega$.

By using a step-by-step procedure - that is, by assuming the instantaneous values of a_v and a_h to be effective for small increments of time and by letting V_v and V_h vary accordingly after each increment of time - the component paths of the falling man have been computed as follows:

$$\Delta s_v = V_v t + \frac{a_v}{2}t^2$$

and

$$\Delta s_h = V_h t - \frac{a_h}{2}t^2$$

For the two examples presented, rates of airplane vertical descent greater and less, respectively, than the terminal velocity of a man's body in a free fall were assumed. Four alternate paths taken by the man's body have been estimated for each spin. These paths started from four corresponding points of pilot exit, that is, outboard and inboard sides of the cockpit for two cockpit locations - one forward and one rearward of the leading edge of the wing. The relative positions of the airplane and of the man have been computed at intervals of one-quarter turn of the model about the spin axis and are shown in figures 8 and 9. These figures indicate that if bail-out is made from either the inboard or the outboard side of a cockpit located forward of the wing leading edge, there is danger of the pilot being struck by the outboard wing, but that if bail-out is made from a cockpit located rearward of the wing leading edge, safe escape should be effected. As discussed previously, the experimental test results also indicated that bailing out of a cockpit located forward of the wing leading edge was dangerous. The experimental results indicated, however, that leaving the inboard side of a cockpit located rearward of the wing leading edge would not lead to safe escape. Thus, the computed results are not in complete agreement with the test results. The use of the equations in making the computations was based on the assumption that the man accelerated vertically and horizontally immediately upon leaving the cockpit, although the test results indicate that such was not the case when the pilot model was released from the

inboard side of the cockpit located rearward of the wing leading edge. Accordingly, corrections based on the test results have been applied in computing the man's path after leaving the inboard side of the rearward cockpit and the recomputed relative positions are also shown in figures 8 and 9. For figure 8, in which $V_a > V_t$, the correction consisted of assuming that during the first three-eighths of a turn of the airplane following bail-out, the pilot moved downward to a point near the nose of the airplane and then began to move upward and outward. For figure 9, in which $V_a < V_t$, the correction consisted of assuming that the pilot did not start to move outward from the airplane until three-eighths of a turn after bail-out. The recomputed results indicate relative paths similar to those obtained during the experimental test results.

These results show that when the steady-spin parameters of an airplane can be determined from model tests or estimated from design data, the relative paths of the spinning airplane and of a man upon abandoning the airplane can be estimated.

Effects of Centripetal Acceleration on Pilot of Spinning Airplane

Based on the data obtained during the model spin tests, the centrifugal forces that would act on pilots due to centripetal acceleration during flat and steep spins of the airplanes simulated in the tests have been evaluated in order to determine whether the pilots could move sufficiently to bail out of the cockpits. In calculating the centripetal accelerations the formula $a_c = R\Omega^2$ was used and the accelerations are listed in table IV. The radius of each spin was computed by the method of reference 1. In order to bail out of either side of the cockpit, a pilot must move his body in a direction at right angles to the force resulting from the centripetal acceleration. Reference 6 indicates that a man's ability to make such a movement is seriously restricted when the magnitude of the acceleration reaches 2g or 3g and that in the neighborhood of 4g it becomes impossible to do more than move the arms and legs.

The values in table IV indicate that the force due to centripetal acceleration which would act on pilots during flat, fully developed spins of airplanes of the types for which pilot-release tests were made would not prevent a pilot from bailing out of the cockpit. The calculations also indicate that for some steep spinning conditions, such as for a man in the more rearward cockpit of the airplane simulated by model 10, the acceleration might reach values of approximately 3g which would make escape difficult but not impossible. The test of model 10 may apparently be considered an extreme case, however, because of its large radius of spin combined with a relatively high rate of rotation about the spin axis. As a spin becomes steeper, the radius of spin generally increases and the rate of rotation about the spin axis decreases, these two factors compensating for one another in determining the centripetal acceleration.

Previous investigations of spins of large airplanes of types for which model pilot-release tests were not made indicated that accelerations of 6g may be reached at the tail of the spinning airplane; these accelerations would result in a force which would immobilize a man (see reference 7).

CONCLUSIONS AND RECOMMENDATIONS

Based on an analysis of the results of pilot-release tests made from 21 models of fighter, torpedo-bomber, scout-bomber, and trainer airplanes spinning in the Langley 20-foot free-spinning tunnel, the following conclusions and recommendations are made:

1. For airplanes in which the cockpit is rearward of the leading edge of the wing at the fuselage juncture, the procedure recommended for bail-out is as follows: (1) Leave from the outboard side of the cockpit (left side in a spin to the pilot's right) and attempt to go over the top of the outboard wing and off the trailing edge and (2) leave in a crouched attitude in order to aid in clearing the under surface of the outboard side of the horizontal tail.

2. For airplanes in which the cockpit is forward of the leading edge of the wing at the fuselage juncture, bailing out from either side of the cockpit is dangerous. Indications are that the pilot would have a better chance of escaping if he leaves from the outboard side rather than from the inboard side, particularly if he can jump in a direction that would enable him to clear the outboard wing of the airplane. Provision of an ejection-seat or a capsule system which would throw the pilot safely away from the spinning airplane may be advisable.

3. It was found that the path followed by a man after leaving a spinning airplane can be calculated if the angle of attack and the rates of descent and rotation of the airplane are known.

4. For the types of airplanes covered by this experimental investigation, analysis indicates that the centrifugal force which would act on a pilot during a spin would probably not prevent him from leaving the cockpit.

Langley Aeronautical Laboratory
National Advisory Committee for Aeronautics
Langley Field, Va., November 28, 1947

REFERENCES

1. Zimmerman, C. H.: Preliminary Tests in the N.A.C.A. Free-Spinning Wind Tunnel. NACA Rep. 557, 1936.

2. Seidman, Oscar, and Neihouse, A. I.: Free-Spinning Wind-Tunnel Tests of a Low-Wing Monoplane with Systematic Changes in Wings and Tails. V. Effect of Airplane Relative Density. NACA Rep. 691, 1940.

3. Seidman, Oscar, and Neihouse, A. I.: Free-Spinning Wind-Tunnel Tests of a Low-Wing Monoplane with Systematic Changes in Wings and Tails. II. Mass Distributed along the Fuselage. NACA TN 630, 1937.

4. Seidman, Oscar, and Neihouse, A. I.: Free-Spinning Wind-Tunnel Tests of a Low-Wing Monoplane with Systematic Changes in Wings and Tails. III. Mass Distributed along the Wings. NACA TN 664, 1938.

5. Wildhack, W. A.: Optimum Time of Delay for Parachute Opening. Jour. Aero. Sci., vol. 9, no. 8, June 1942, pp. 293-301.

6. Code, Charles F., Wood, Earl H., and Lambert, Edward H.: The Limiting Effect of Centripetal Acceleration on Man's Ability to Move. Jour. Aero. Sci., vol. 14, no. 2, Feb. 1947, pp. 117-123.

7. Seidman, Oscar: Spinning of Large Airplanes. NACA RB L4I07, 1944.

TABLE I.- STEADY-SPIN PARAMETERS OBTAINED FOR THE MODELS FOR WHICH PILOT-ESCAPE TESTS WERE MADE IN THE LANGLEY 20-FOOT FREE-SPINNING TUNNEL

[Model results have been converted to full-scale airplane values]

Model	Flat spins (40° to 62°)			Steep spins (<40°)		
	α (deg)	V_a (fps)	Ω (rps)	α (deg)	V_a (fps)	Ω (rps)
1	44	224	0.42	(a)	[a] > 341	(a)
2	46	216	.41	27	300	0.56
3	43	273	.46	(a)	[a] > 320	(a)
4	62	197	.49	(a)	[a] > 347	(a)
5	60	216	.47	(a)	[a] > 326	(a)
6	49	216	.43	23	313	.56
7	60	189	.43	(a)	[a] > 306	(a)
8	50	211	.41	---	---	----
9	53	207	.37	(a)	[a] > 340	(a)
10	--	---	----	19	211	.41
11	58	210	.42	26	350	.38
12	51	233	.38	25	326	.40
13	45	220	.37	(a)	[a] >310	(a)
14	45	201	.38	(a)	[a] >300	(a)
15	60	223	.36	(a)	[a] >306	(a)
16	43	260	.42	29	328	.49
[b]17	58	197	.34	---	---	----
	50	202	.34	---	---	----
18	51	216	.36	---	---	----
19	46	244	.36	(a)	[a] >320	(a)
20	57	198	----	(c)	300 (approx.)	(c)
21	40	254	.40	---	---	----

[a]Because of high rate of vertical descent, pilot released before model reached its final steep attitude (approx. range of α from 15° to 30°).

[b]Two types of flat spins obtained for model.

[c]Parameters α and Ω not measured because of extreme oscillations of model.

TABLE II.- MASS CHARACTERISTICS OF THE MODELS TESTED

[Model values have been converted to full-scale values]

Model	Weight (lb)	μ at sea level	μ at test altitude	Center-of-gravity location		Moments of inertia about center of gravity		
				$x/\bar{c}$	$z/\bar{c}$	I_X (slug-ft^2)	I_Y (slug-ft^2)	I_Z (slug-ft^2)
1	8,860	13.4	21.2	0.238	-0.042	5,149	8,176	12,642
2	13,818	9.8	15.6	.260	.060	16,241	22,639	36,810
3	16,396	15.6	24.9	.300	.070	16,335	18,011	33,519
4	18,150	11.7	18.6	.270	.040	16,692	25,525	41,814
5	19,998	12.3	19.5	.220	.070	27,445	28,544	53,641
6	20,831	11.0	17.4	.268	.122	23,822	31,619	54,321
7	14,961	9.3	14.8	.312	.021	15,504	21,903	36,240
8	9,514	11.3	18.0	.268	.004	5,720	11,635	17,330
9	16,378	11.1	17.7	.250	.020	11,546	33,539	42,211
10	3,808	5.1	6.8	.250	.049	1,855	2,724	4,248
11	19,280	7.7	17.1	.245	.014	22,645	39,842	58,957
12	26,693	8.2	15.3	.216	.064	52,472	51,969	104,000 (approx.)
13	17,036	8.4	13.3	.274	.073	25,977	31,949	56,523
14	18,180	11.2	17.6	.212	.009	17,335	37,000	54,000 (approx.)
15	12,963	17.9	28.4	.270	-.010	11,714	14,934	25,731
16	14,340	19.2	30.6	.235	.125	33,368	13,839	45,085
17	7,873	8.8	16.6	.204	-.010	4,136	9,397	13,461
18	12,392	13.5	21.4	.183	.069	7,887	15,957	22,058
19	19,773	11.3	18.0	.265	.014	19,630	34,044	51,557
20	9,262	18.1	28.8	.330	-.076	4,133	12,266	15,265
21	16,567	15.6	24.8	.196	-.085	12,211	42,218	51,888

NACA

TABLE III.- RESULTS OF PILOT-RELEASE TESTS MADE WITH MODELS IN THE LANGLEY 20-FOOT FREE-SPINNING TUNNEL

[Models 1 to 13 have cockpits located rearward of wing leading edge; models 14 to 21 have cockpits located forward of wing leading edge]

Model	Flat spins				Steep spins			
	Pilot released from outboard side of cockpit		Pilot released from inboard side of cockpit		Pilot released from outboard side of cockpit		Pilot released from inboard side of cockpit	
	Vertical motion relative to model	Path after release	Vertical motion relative to model	Path after release	Vertical motion relative to model	Path after release	Vertical motion relative to model	Path after release
1	Up	Went over trailing edge of outboard wing, under rear fuselage or horizontal tail, and out of helical cylinder; cleared model by adequate margin	Up	Passed through propeller disk	Up	Went over trailing edge of outboard wing, under rear fuselage or horizontal tail, and out of helical cylinder; cleared model by adequate margin	Up	Went over fuselage, under outboard side of horizontal tail, out of helical cylinder; cleared model by adequate margin
2	-do-	----------do----------	-do-	----------do----------	-do-	----------do----------	-do-	Do.
3	-do-	----------do----------	-do-	----------do----------	-do-	----------do----------	-do-	Do.
4	Down	----------do----------	Down	----------do----------	-do-	----------do----------	-do-	Do.
5	Up	----------do----------	Up	----------do----------	-do-	----------do----------	-do-	Went over fuselage, was struck by outboard side of rear fuselage section
6	-do-	----------do----------	-do-	Passed close to propeller disk; then went over fuselage and upward and was struck by outboard side of horizontal tail	-do-	----------do----------	-do-	Went over fuselage, under outboard side of horizontal tail, out of helical cylinder; cleared model
[a]7	Down	----------do----------	Down	Passed through propeller disk	[b]None	[b]----------do----------	[b]Down	[b]Passed through or near propeller disk
[c]7	-do-	Went over trailing edge of outboard wing, under rear fuselage or horizontal tail, and out of helical cylinder; cleared horizontal tail by smaller margin than when released from front cockpit	-do-	----------do----------	[b]-do-	[b]----------do----------	[b]None	[b]Went over fuselage, was almost struck by outboard wing tip; then went out of helical cylinder
8	Up	Went over trailing edge of outboard wing, under rear fuselage or horizontal tail, and out of helical cylinder; cleared model by adequate margin	Up	----------do----------	----	----------	----	----------
9	None	----------do----------	Down	----------do----------	Up	Went over trailing edge of outboard wing, under rear fuselage or horizontal tail and out of helical cylinder; cleared model by adequate margin	Up	Went over fuselage, was struck by outboard side of horizontal tail
[a]10	[d]Down	[d]----------do----------	[d]-do-	[d]----------do----------	-do-	----------do----------	Down	Passed through propeller disk
[c]10	[d]-do-	[d]----------do----------	[d]-do-	[d]----------do----------	-do-	----------do----------	-do-	Do.
11	None	----------do----------	-do-	----------do----------	-do-	----------do----------	Up	Went over fuselage, was struck by outboard side of horizontal tail
12	Up	----------do----------	Up	----------do----------	-do-	----------do----------	-do-	Do.
13	-do-	----------do----------	-do-	----------do----------	-do-	----------do----------	-do-	Do.

[a]Pilot released from front cockpit; see figure 1.
[b]Pilot released while model was steepening, but was still in fairly flat attitude with low rate of descent.
[c]Pilot released from rear cockpit; see figure 1.
[d]Pilot released immediately after launching while model was in flat attitude; had not steepened to spin indicated in table I.

TABLE III.- RESULTS OF PILOT-RELEASE TESTS MADE WITH MODELS IN THE LANGLEY 20-FOOT FREE-SPINNING TUNNEL - Concluded

Model	Flat spins				Steep spins			
	Pilot released from outboard side of cockpit		Pilot released from inboard side of cockpit		Pilot released from outboard side of cockpit		Pilot released from inboard side of cockpit	
	Vertical motion relative to model	Path after release	Vertical motion relative to model	Path after release	Vertical motion relative to model	Path after release	Vertical motion relative to model	Path after release
14	Down	Went under leading edge of outboard wing, under rear fuselage or horizontal tail, and out of helical cylinder within one-half turn of the model following release; cleared model by adequate margin	Down	Went over nose and forward near propeller disk; then went under leading edge of outboard wing in same manner as when released from the outboard side	Up	Went over or under leading edge of outboard wing and under rear fuselage or horizontal tail and out of helical cylinder	Up	Went over fuselage, was struck by outboard side of horizontal tail
15	Up	Went over outboard wing, under rear fuselage or horizontal tail, and out of helical cylinder; cleared model by adequate margin	Up	Went over fuselage and was struck by outboard side of horizontal tail	-do-	Went over outboard wing, under rear fuselage and out of helical cylinder; cleared model by adequate margin	-do-	Do.
16	-do-	----------do----------	-do-	Went over nose, under or over leading edge of outboard wing, and under horizontal tail; cleared model by small margin	-do-	----------do----------	-do-	Went over fuselage, came near outboard side of horizontal tail; cleared model by small margin
[e]17	[e]None	[e]----------do----------	[e]Down	[e]Went over nose, under leading edge of outboard wing, and below model; remained in helical cylinder longer than when released from the outboard side	----	----------	----	----------
[f]17	[f]Up	[f]----------do----------	[f]Up	[f]Went over fuselage and was struck by outboard side of horizontal tail	----	----------	----	----------
18	None	Went under outboard wing, under rear fuselage or horizontal tail, and out of helical cylinder; cleared model by adequate margin	Down	Went over nose, under leading edge of outboard wing, and below model; cleared model by adequate margin	----	----------	----	----------
19	Up	Went over outboard wing, brushed against top surface, and went under rear fuselage or outboard side of horizontal tail	Up	Went over fuselage and was struck by outboard side of horizontal tail	Up	Hit leading edge of outboard wing, or went over wing and under rear fuselage and out of helical cylinder	Up	Went over fuselage and close over or under horizontal tail; indicated possibility of being struck by horizontal tail
20	Down	Went under leading edge of outboard wing, under rear fuselage or horizontal tail, and out of helical cylinder within one-half turn of the model following release; cleared model by adequate margin	Down	Went over nose and under leading edge of outboard wing; did not leave helical cylinder until one and one-half turns of model following release.	-do-	Hit leading edge of outboard wing or went under wing and under rear fuselage and out of helical cylinder	-do-	Went over fuselage, was struck by outboard side of horizontal tail
21	Up	----------do----------	Up	----------do----------	----	----------	----	----------

[e]58° flat spin in table I.
[f]50° flat spin in table I.

TABLE IV.- FULL-SCALE VALUES OF CENTRIPETAL ACCELERATIONS ACTING ON PILOT

DURING STEADY SPINS OF AIRPLANES SIMULATED BY FREE-SPINNING MODELS

Model	Flat spins					Steep spins				
	R (ft)	Ω (rps)	Ω (radians/sec)	a_c (ft/sec^2)	a_c (g)	R (ft)	Ω (rps)	Ω (radians/sec)	a_c (ft/sec^2)	a_c (g)
1	4.75	0.42	2.64	33.1	1.03	-----	----	----	----	----
2	4.66	.41	2.57	30.8	.96	5.02	0.56	3.52	62.2	1.93
3	4.75	.46	2.89	39.7	1.23	-----	----	----	----	----
4	1.83	.49	3.08	17.4	.54	-----	----	----	----	----
5	2.17	.47	2.95	18.9	.59	-----	----	----	----	----
6	4.00	.43	2.70	29.2	.91	6.10	.56	3.52	75.6	2.35
[a]7	1.50	.43	2.70	10.9	.34	-----	----	----	----	----
[b]7	8.83	.43	2.70	64.4	2.00	-----	----	----	----	----
8	3.26	.41	2.57	21.5	.67	-----	----	----	----	----
9	4.58	.37	2.32	24.7	.77	-----	----	----	----	----
[a]10	----	----	----	----	----	13.18	.41	2.57	87.1	2.71
[b]10	----	----	----	----	----	14.37	.41	2.57	94.9	2.95
11	2.88	.42	2.64	20.1	.62	11.50	.38	2.39	65.7	2.04
12	4.55	.38	2.39	26.0	.81	10.95	.40	2.51	69.0	2.14
13	4.16	.37	2.32	22.4	.70	-----	----	----	----	----
14	.58	.38	2.39	3.3	.10	-----	----	----	----	----
15	.33	.36	2.26	1.7	.05	-----	----	----	----	----
16	0	.42	2.64	0	0	.58	.49	3.08	5.6	.17
17	0	.34	2.14	0	0	-----	----	----	----	----
18	1.62	.36	2.26	8.3	.26	-----	----	----	----	----
19	2.25	.32	2.01	9.1	.28	-----	----	----	----	----
20	----	----	----	----	----	-----	----	----	----	----
21	4.30	.40	2.51	27.1	.84	-----	----	----	----	----

[a]Front cockpit.
[b]Rear cockpit.

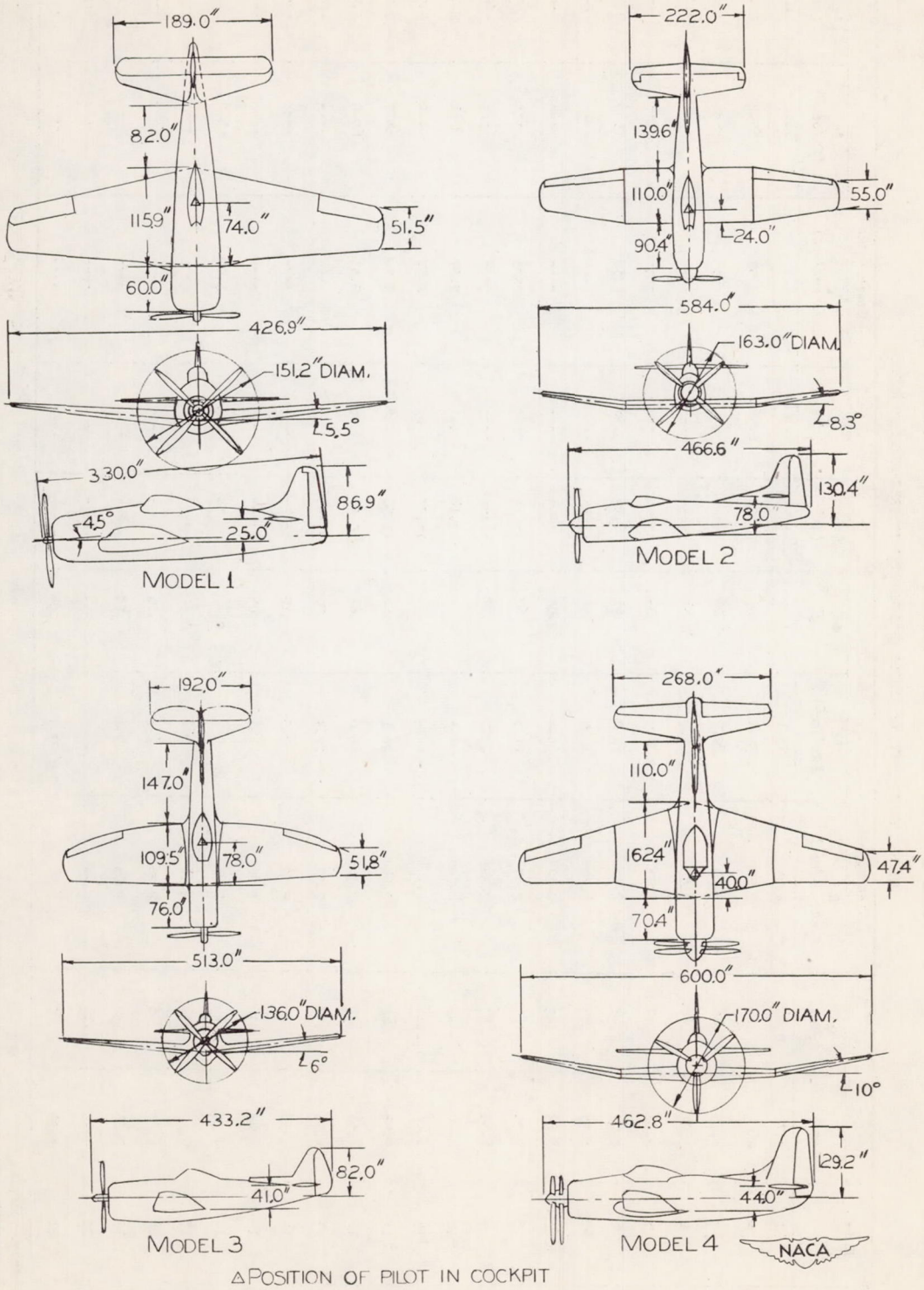

FIGURE 1.- THREE-VIEW SKETCHES OF THE MODELS FOR WHICH PILOT-RELEASE TESTS WERE MADE. DIMENSIONS ARE FULL-SCALE.

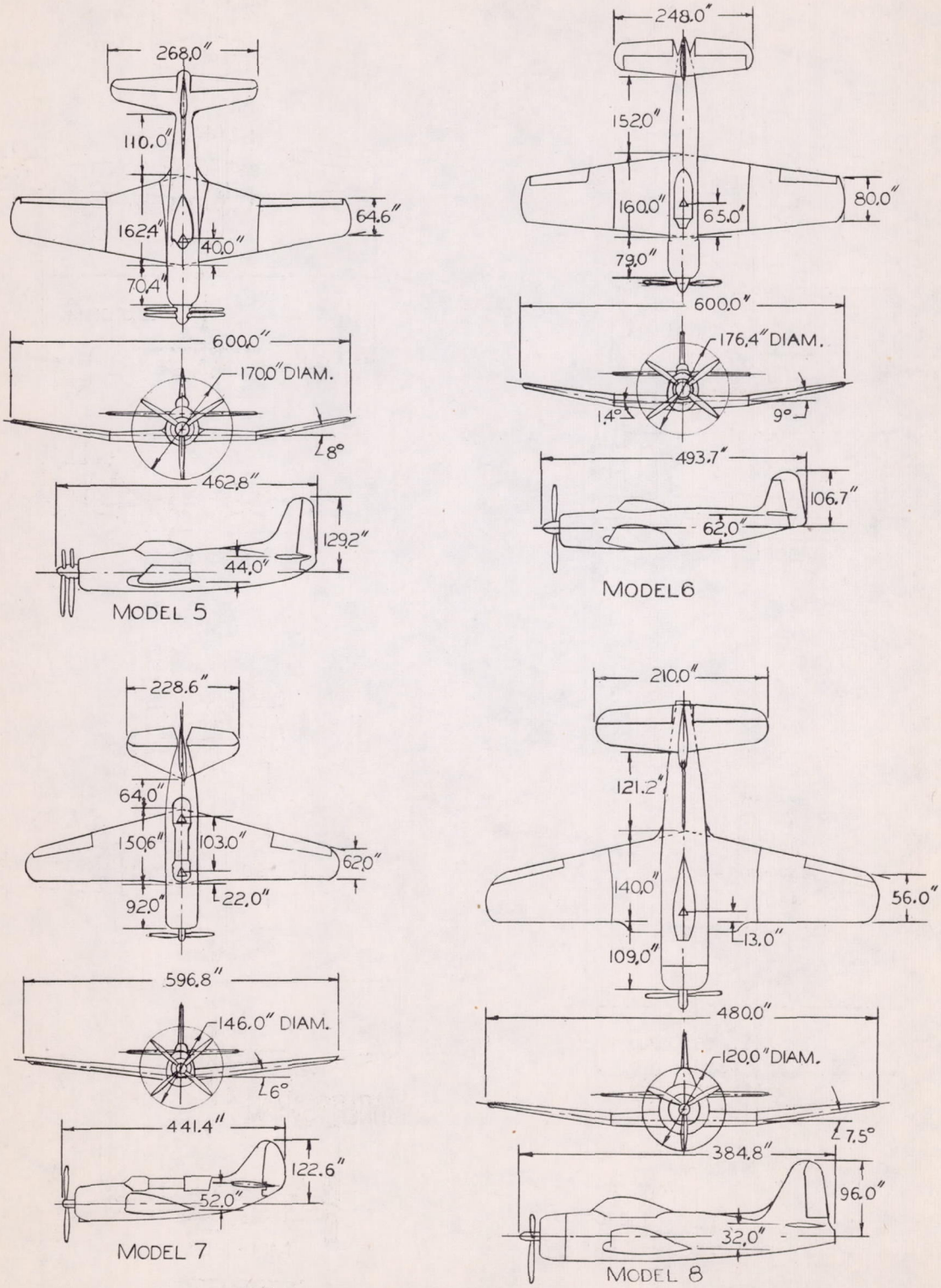

FIGURE 1.- CONTINUED.

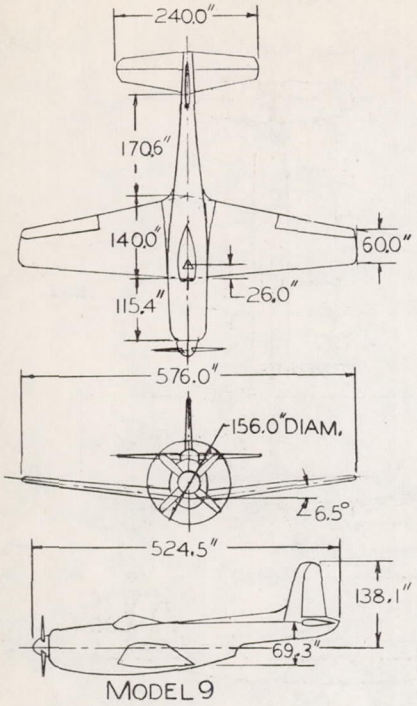

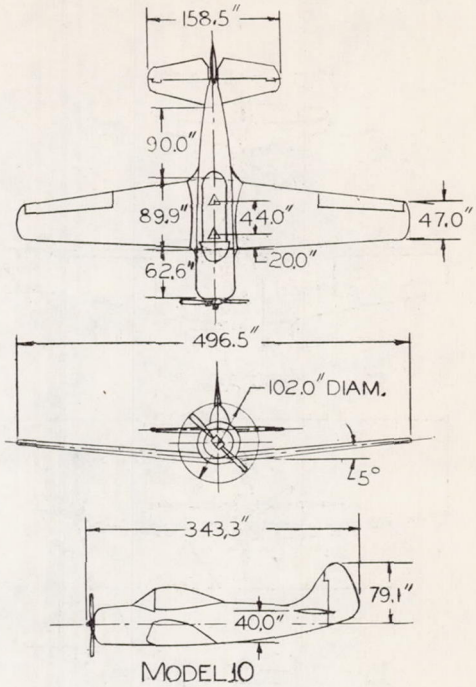

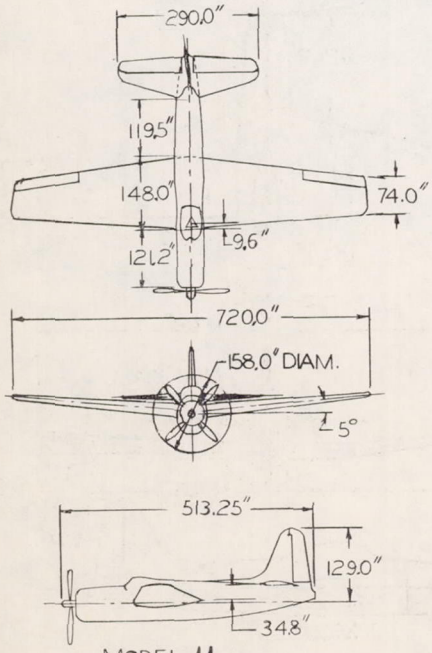

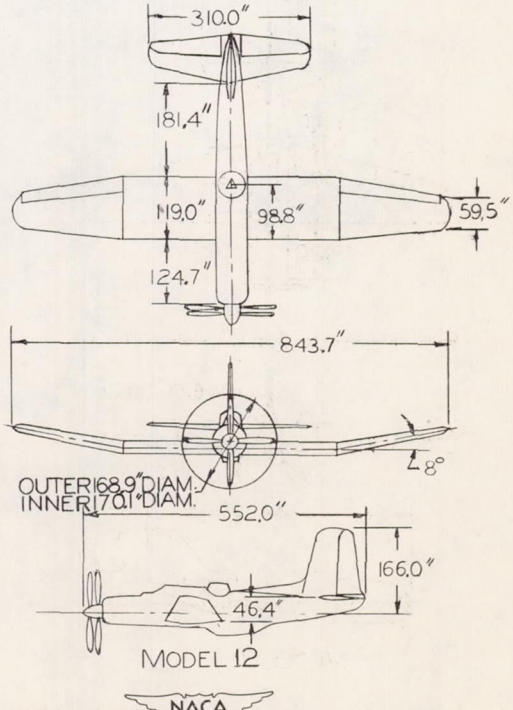

△ POSITION OF PILOT IN COCKPIT

FIGURE 1.-CONTINUED.

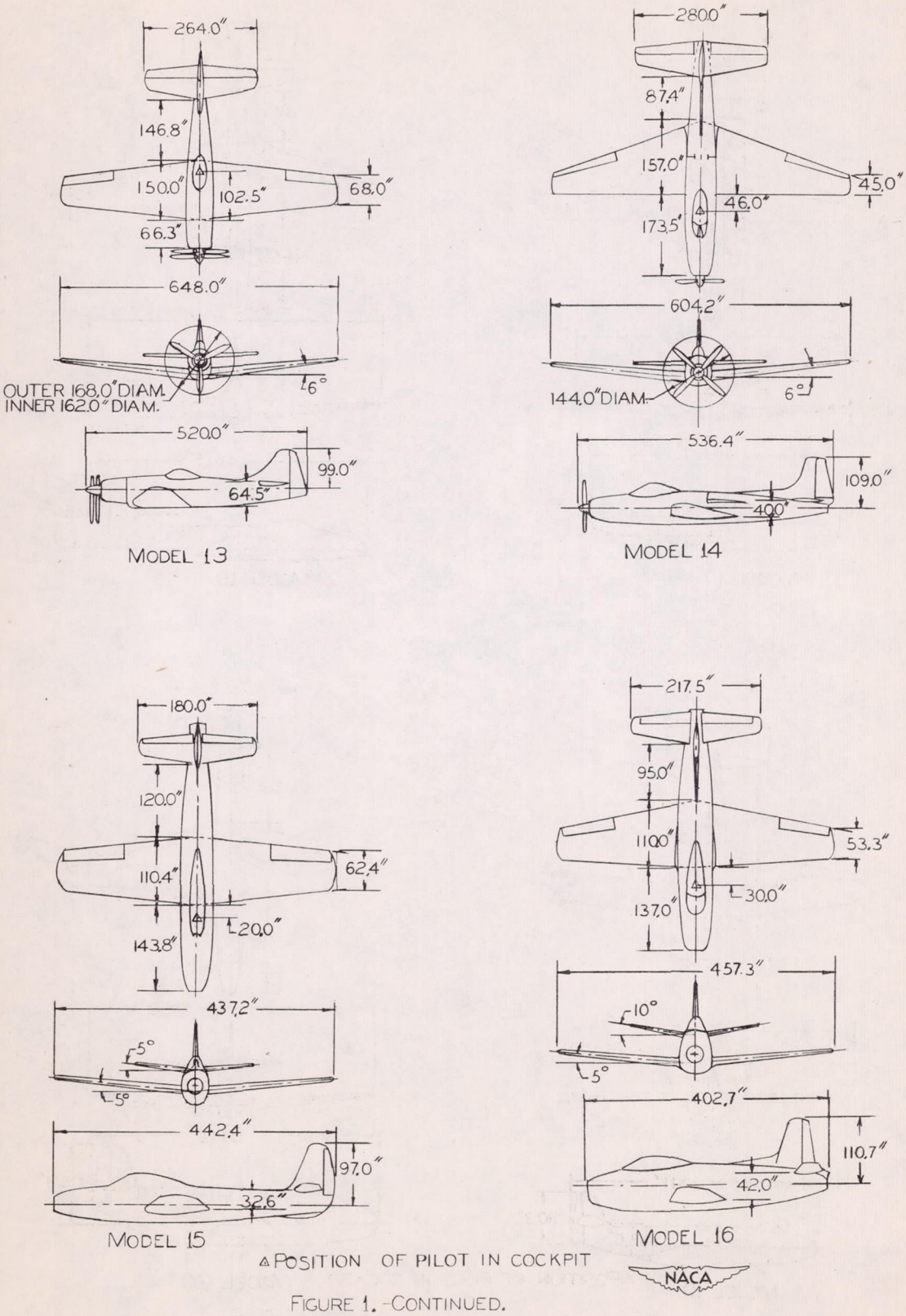

FIGURE 1.-CONTINUED.

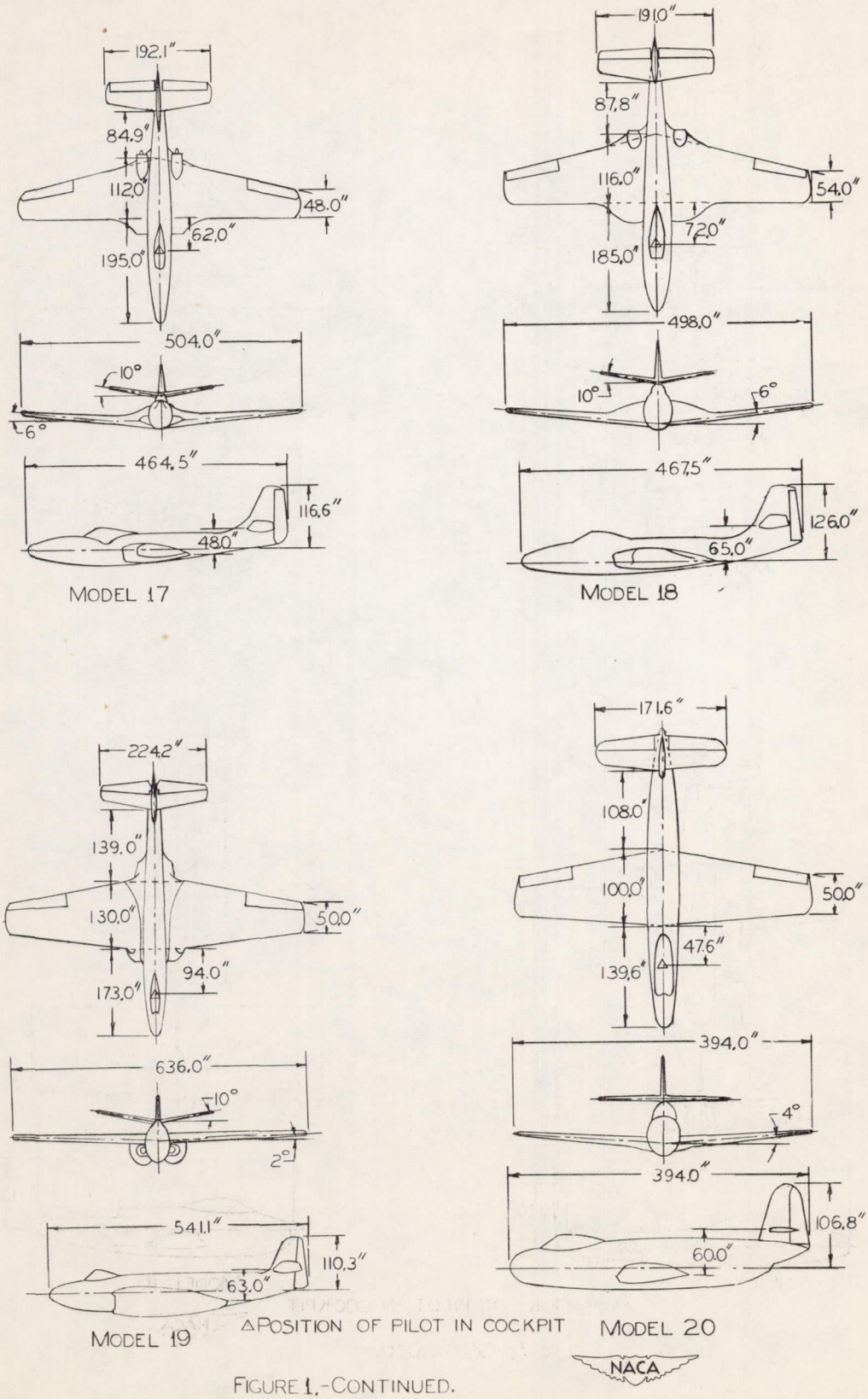

FIGURE 1.-CONTINUED.

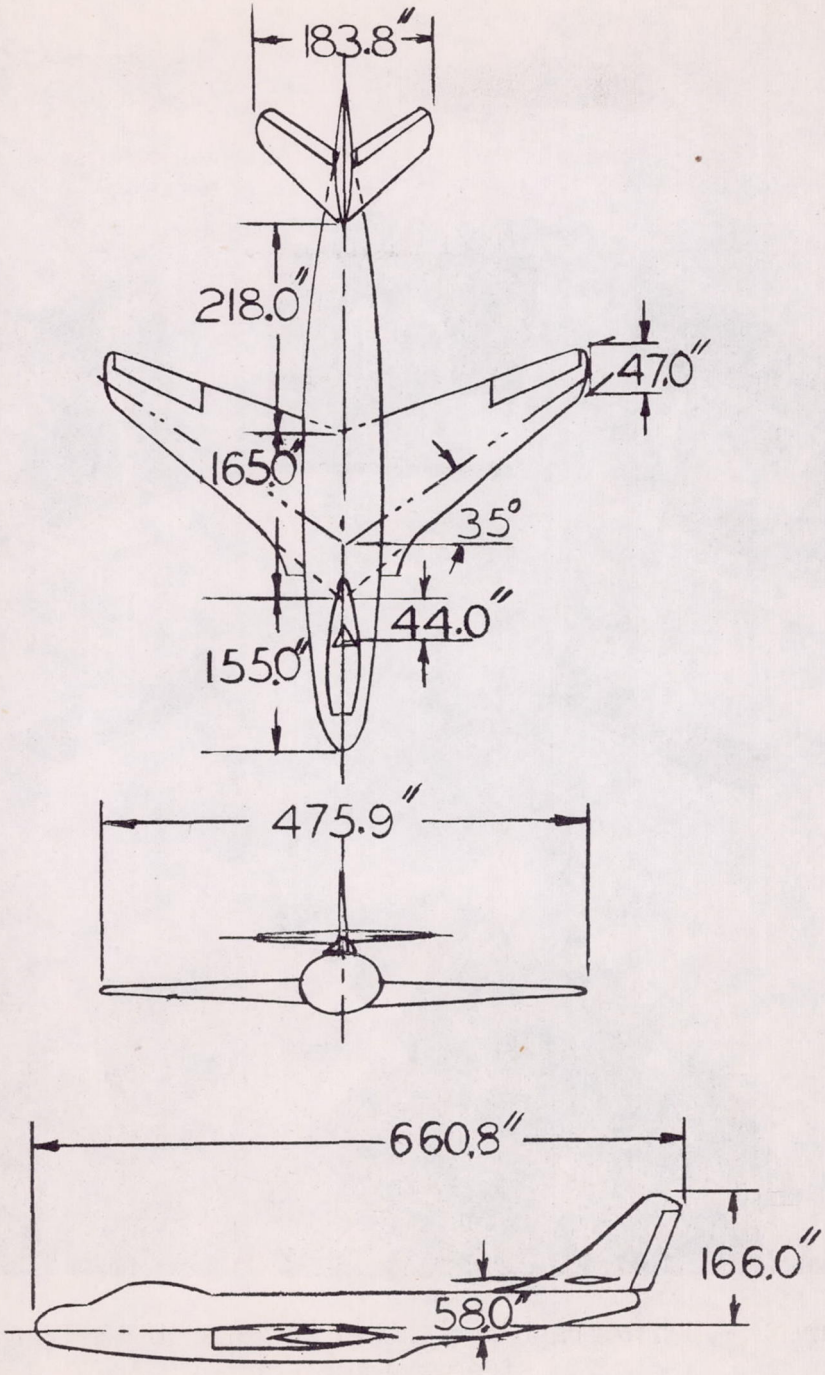

MODEL 21

△ POSITION OF PILOT IN COCKPIT

FIGURE 1.-CONCLUDED.

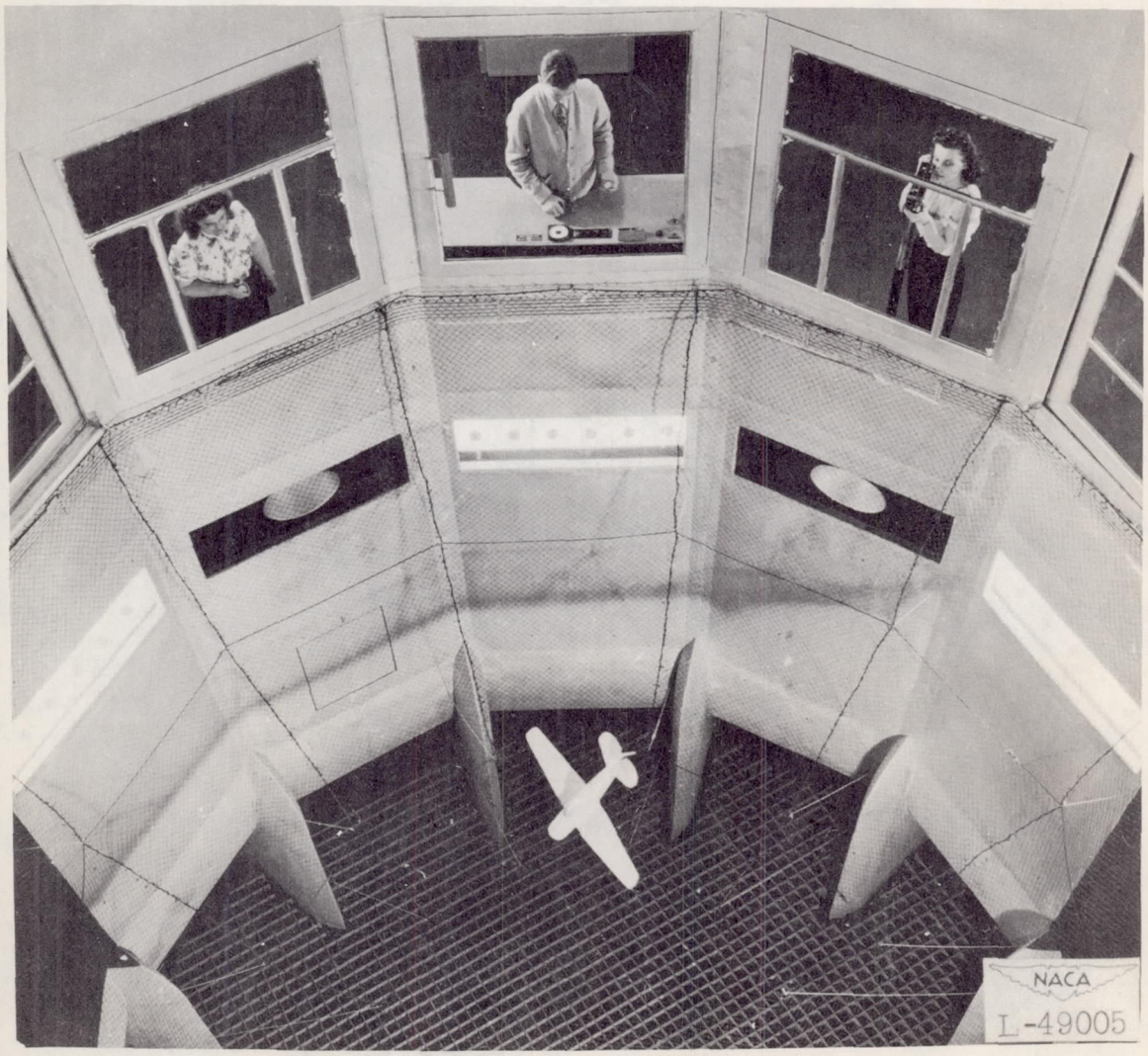

Figure 2.- Photograph of a model spinning in the Langley 20-foot free-spinning tunnel.

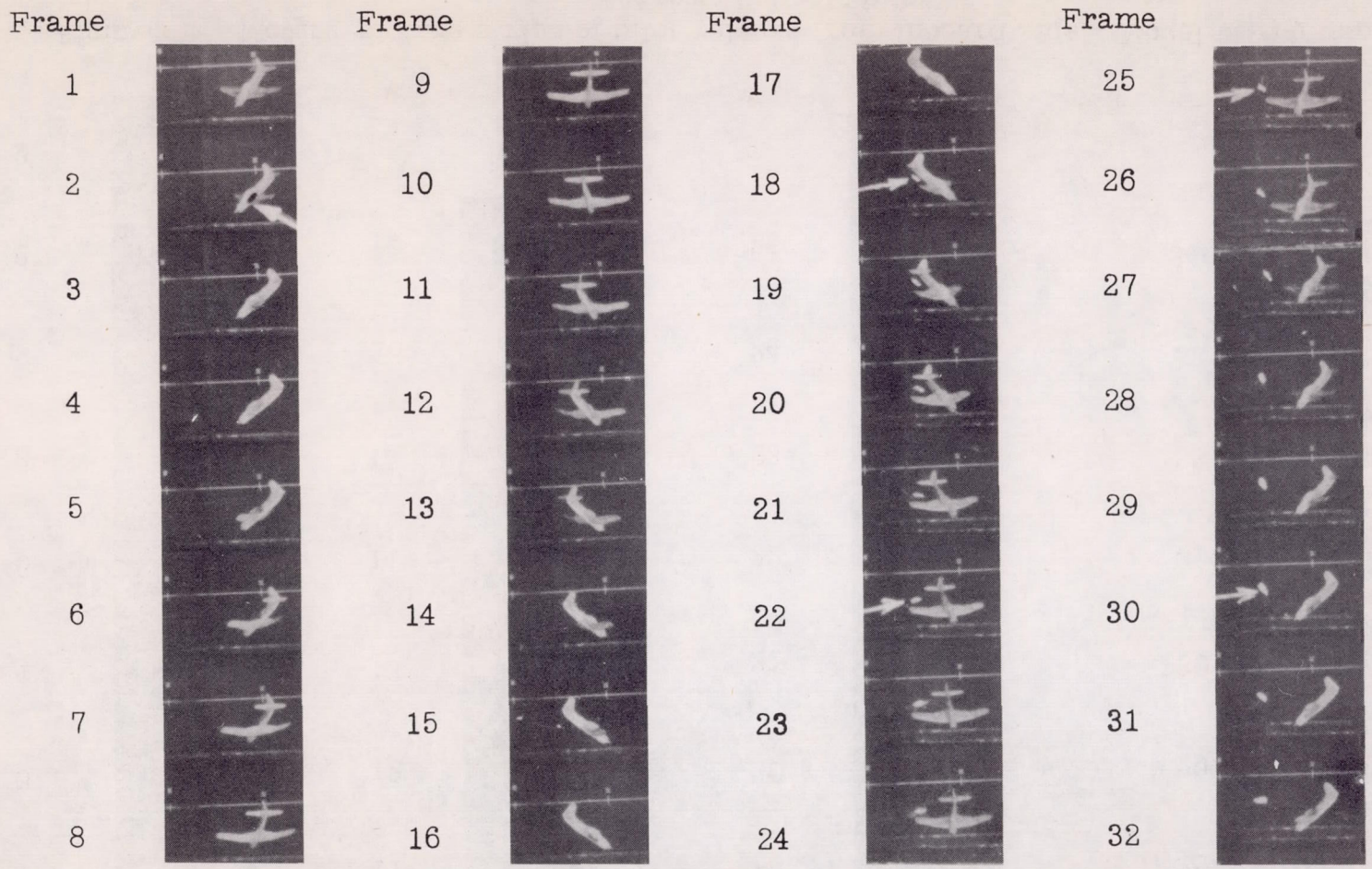

Figure 3.- Moving-picture strips of pilot release from outboard side. Model 5; right spin. (Arrows indicate pilot.)

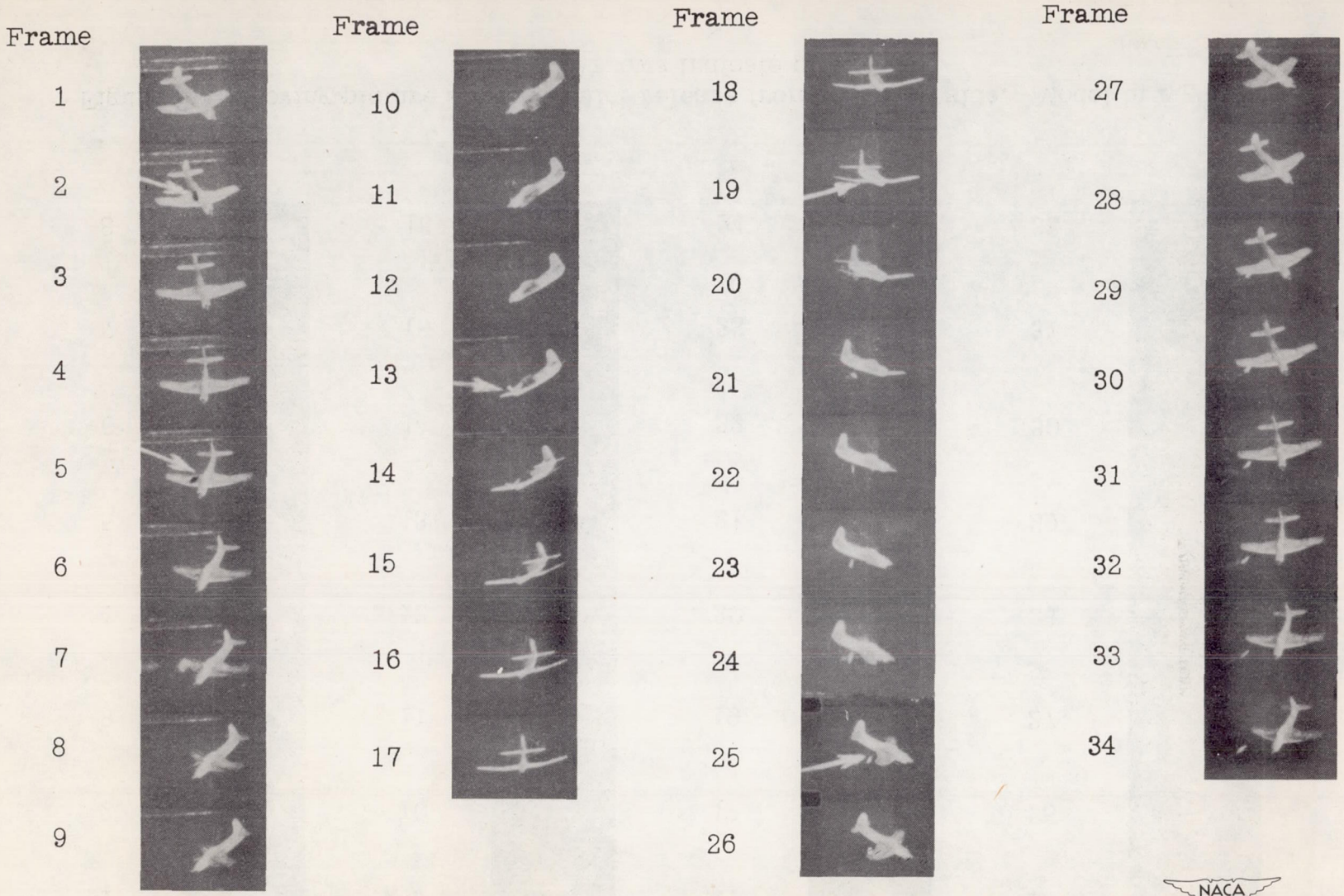

Figure 4.- Moving-picture strips of pilot release from inboard side. Model 5; right spin. (Arrows indicate pilot.)

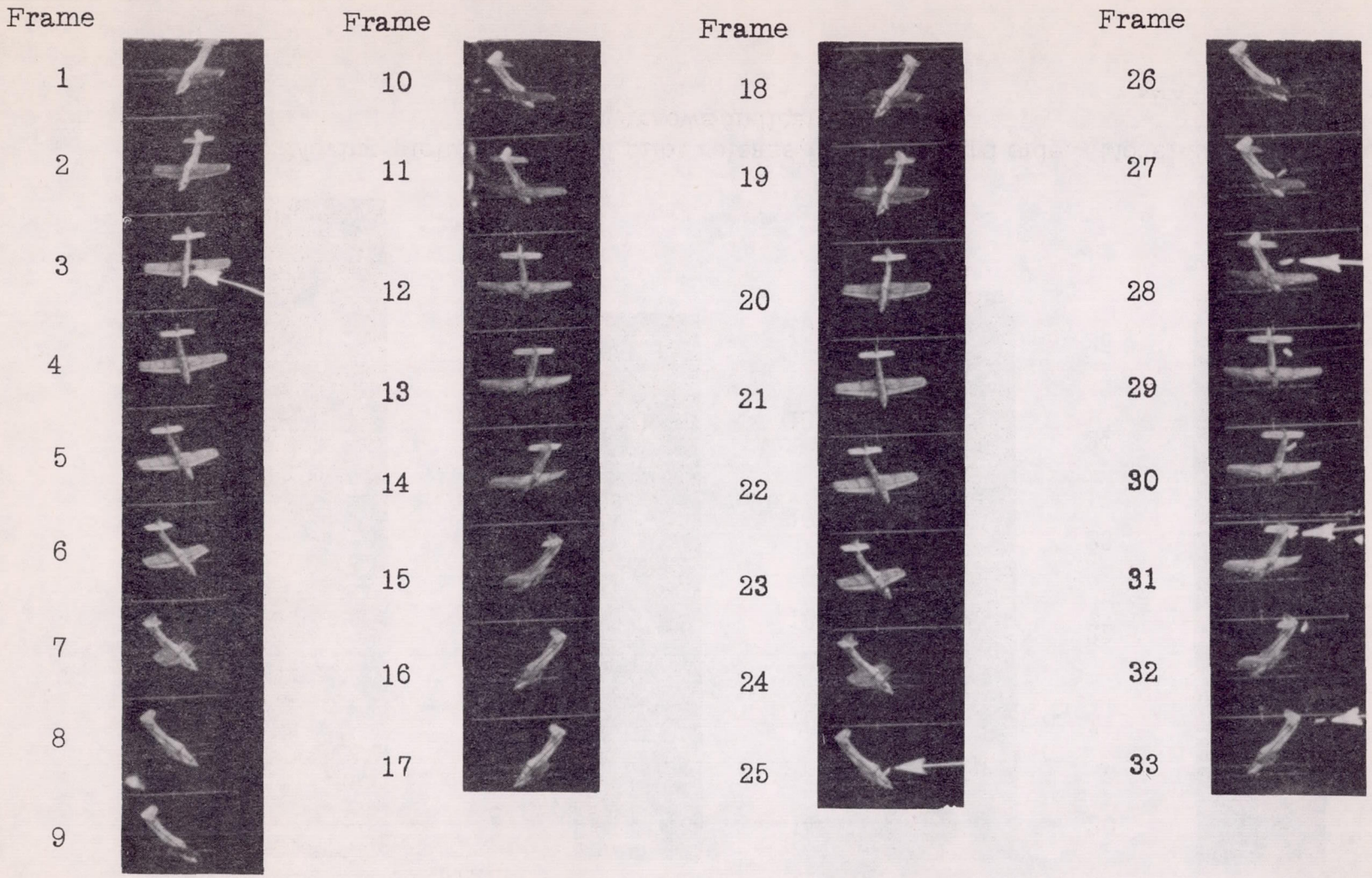

Figure 5.- Moving-picture strips of pilot release from inboard side. Model 6; left spin. (Arrows indicate pilot.)

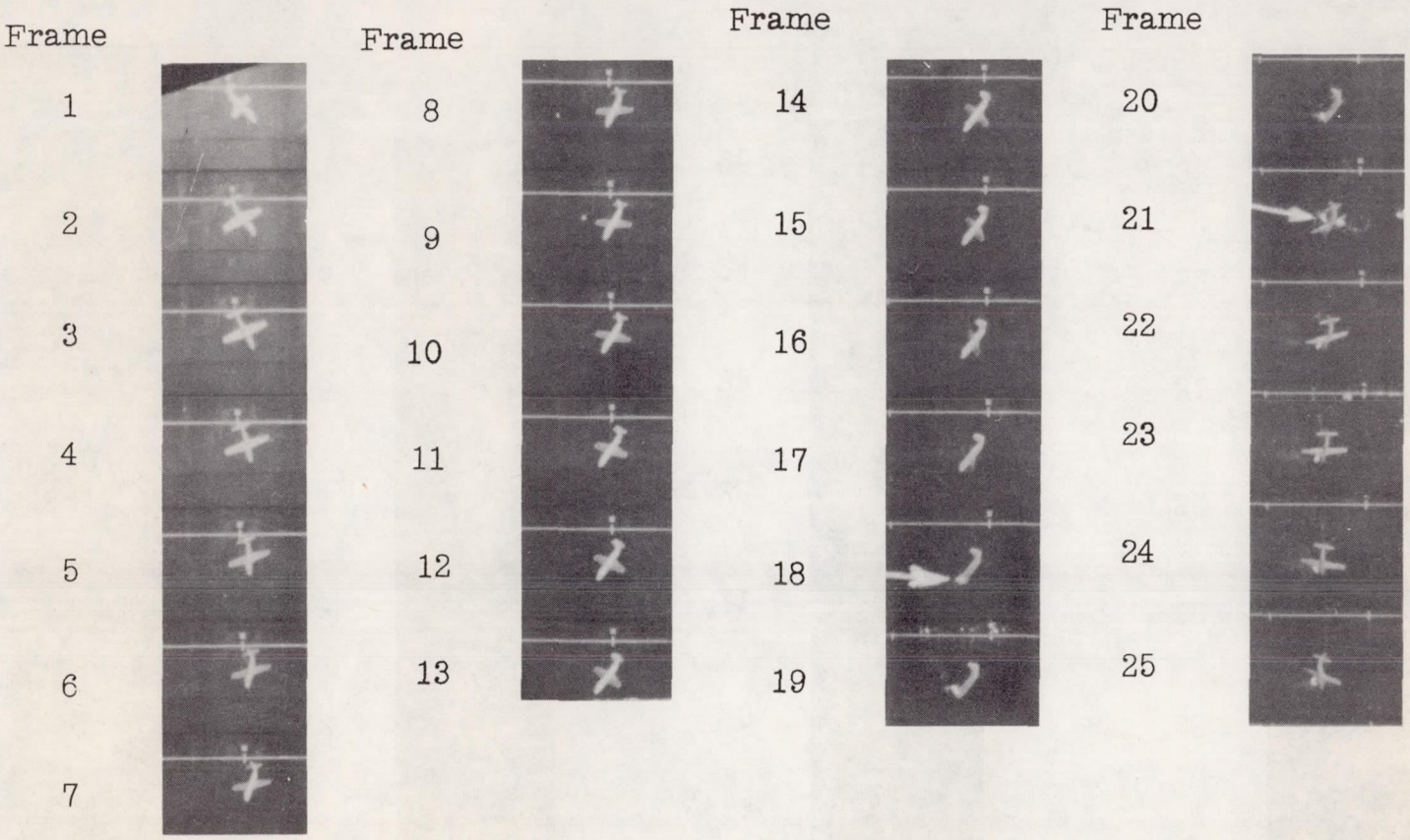

Figure 6.- Moving-picture strips of pilot release from outboard side. Model 20; right spin. (Arrows indicate pilot.)

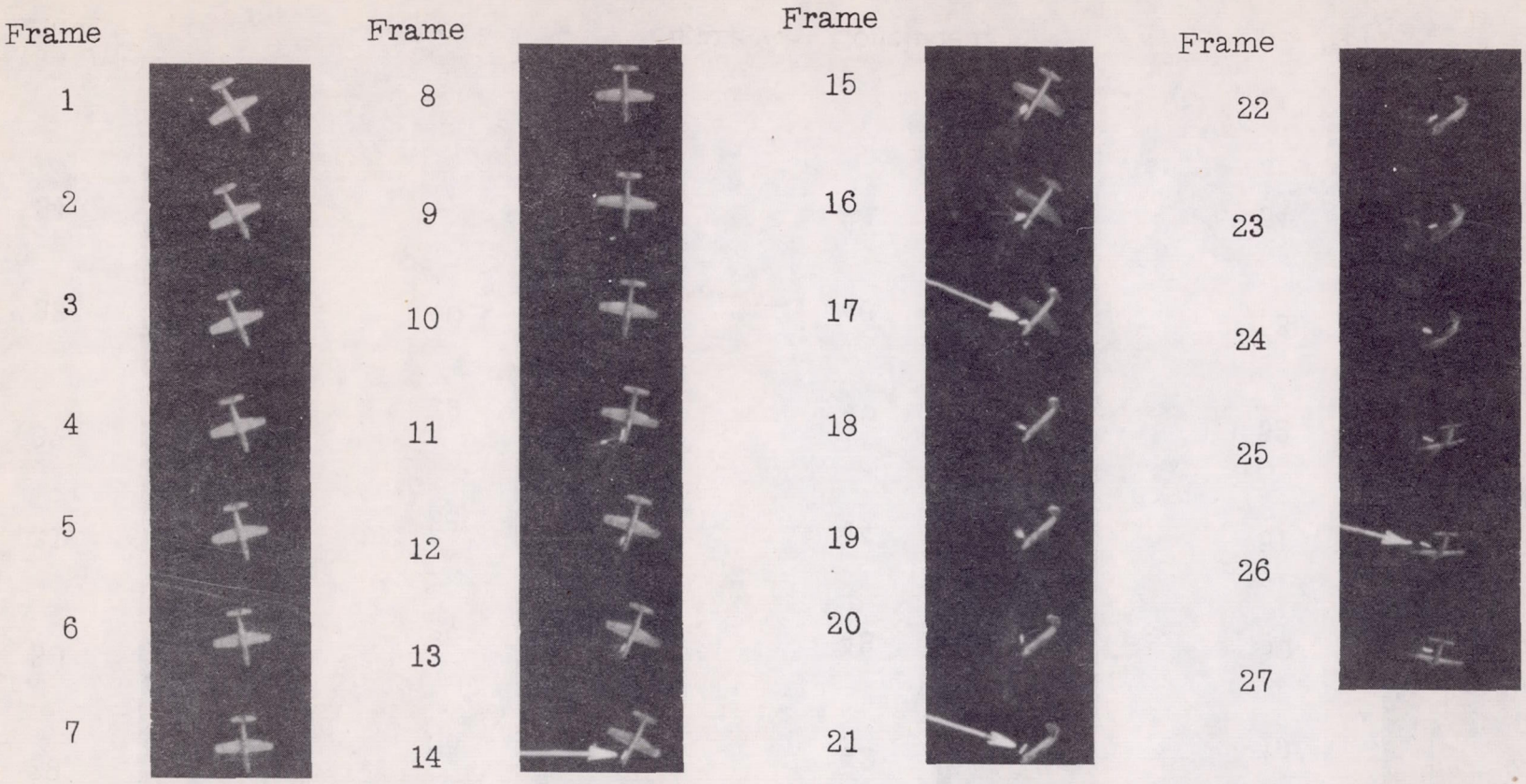

Figure 7.- Moving-picture strips of pilot release from inboard side. Model 20; right spin. (Arrows indicate pilot.)

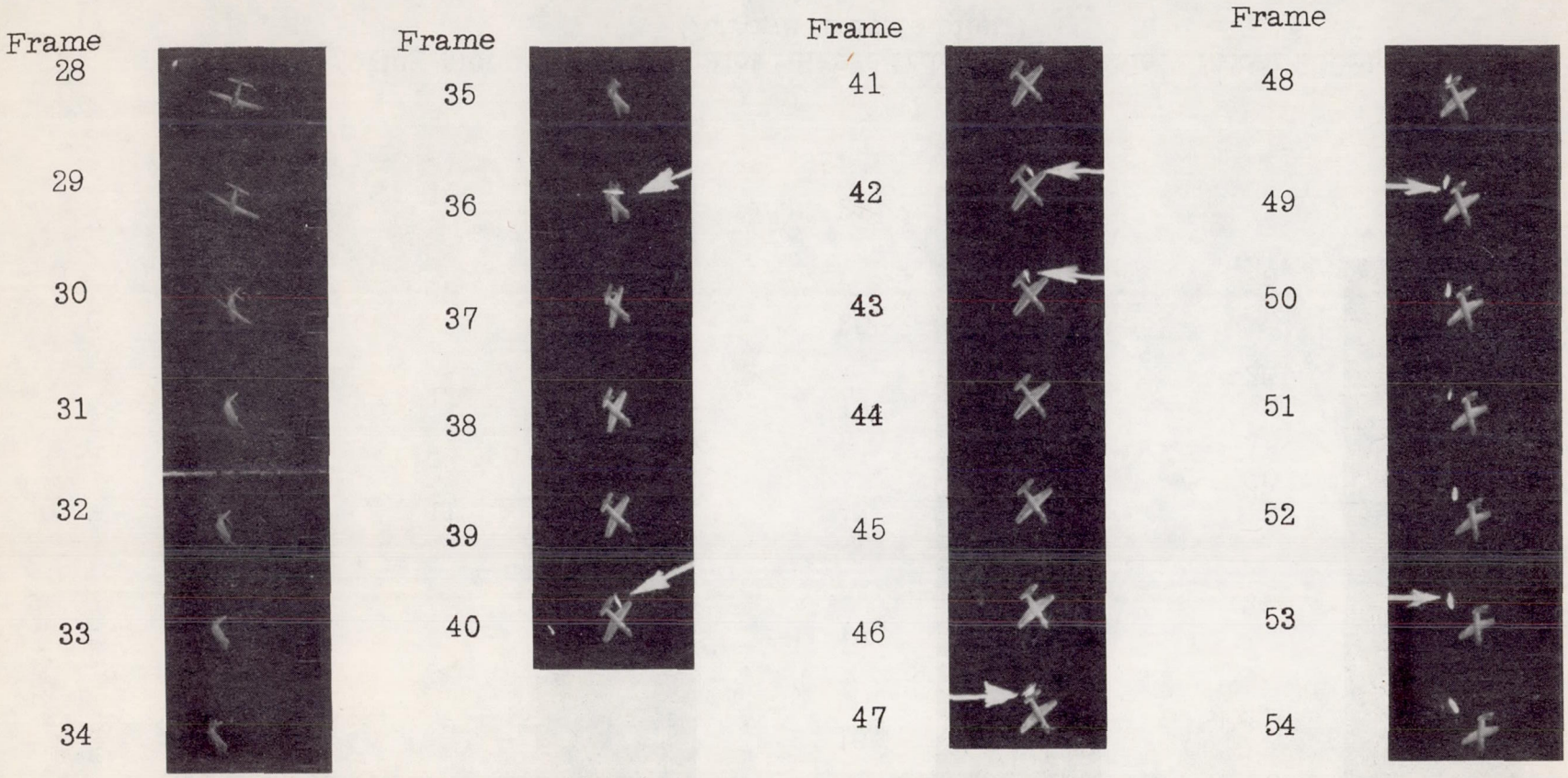

Figure 7.- Concluded.

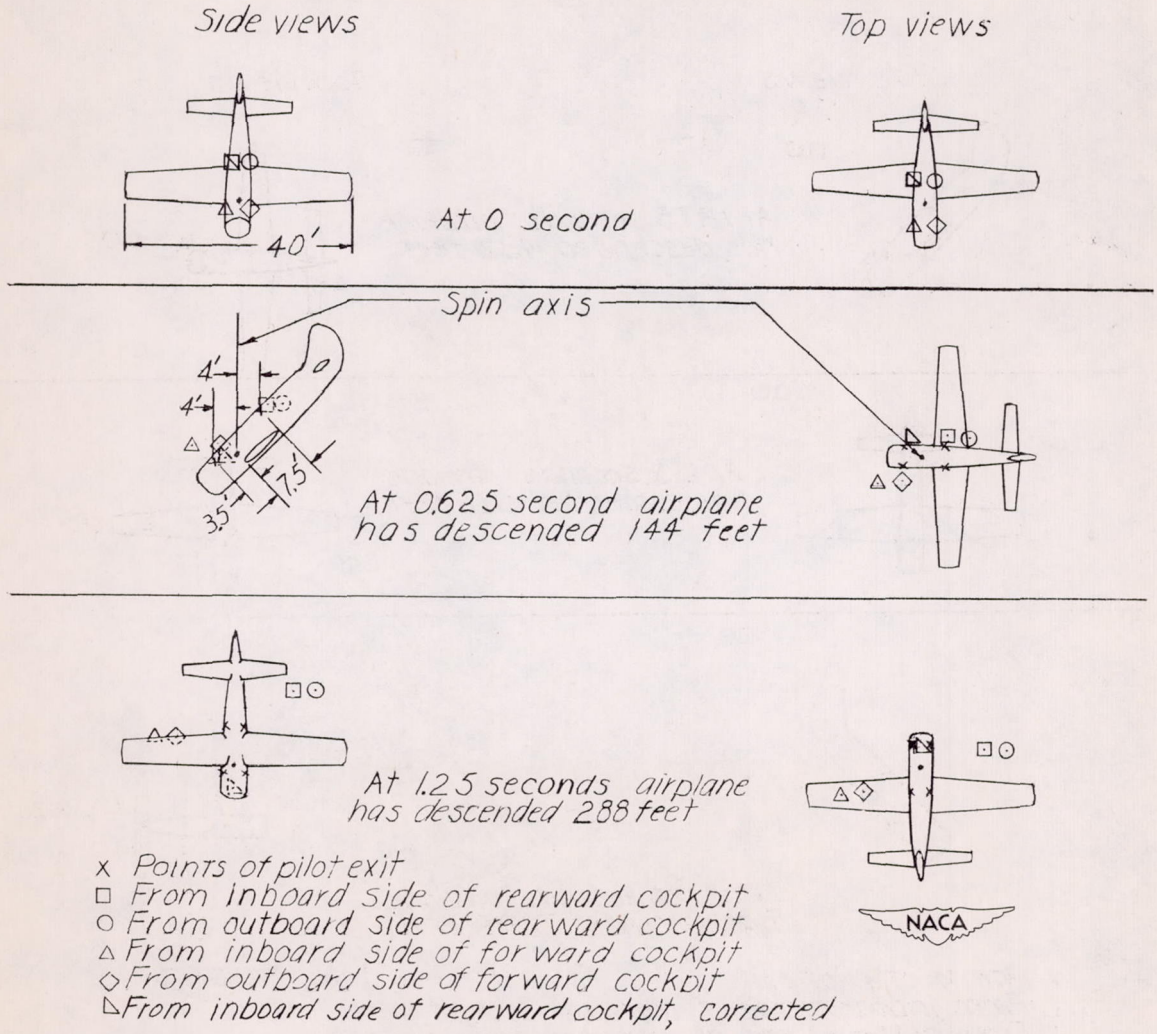

Figure 8.- Relative positions, at intervals following bail-out, of a falling man and of an airplane spinning with a rate of descent greater than that of the man. Right spin; $\alpha = 45°$; $V_a = 230$ feet per second; $\Omega = 0.40$ revolutions per second.

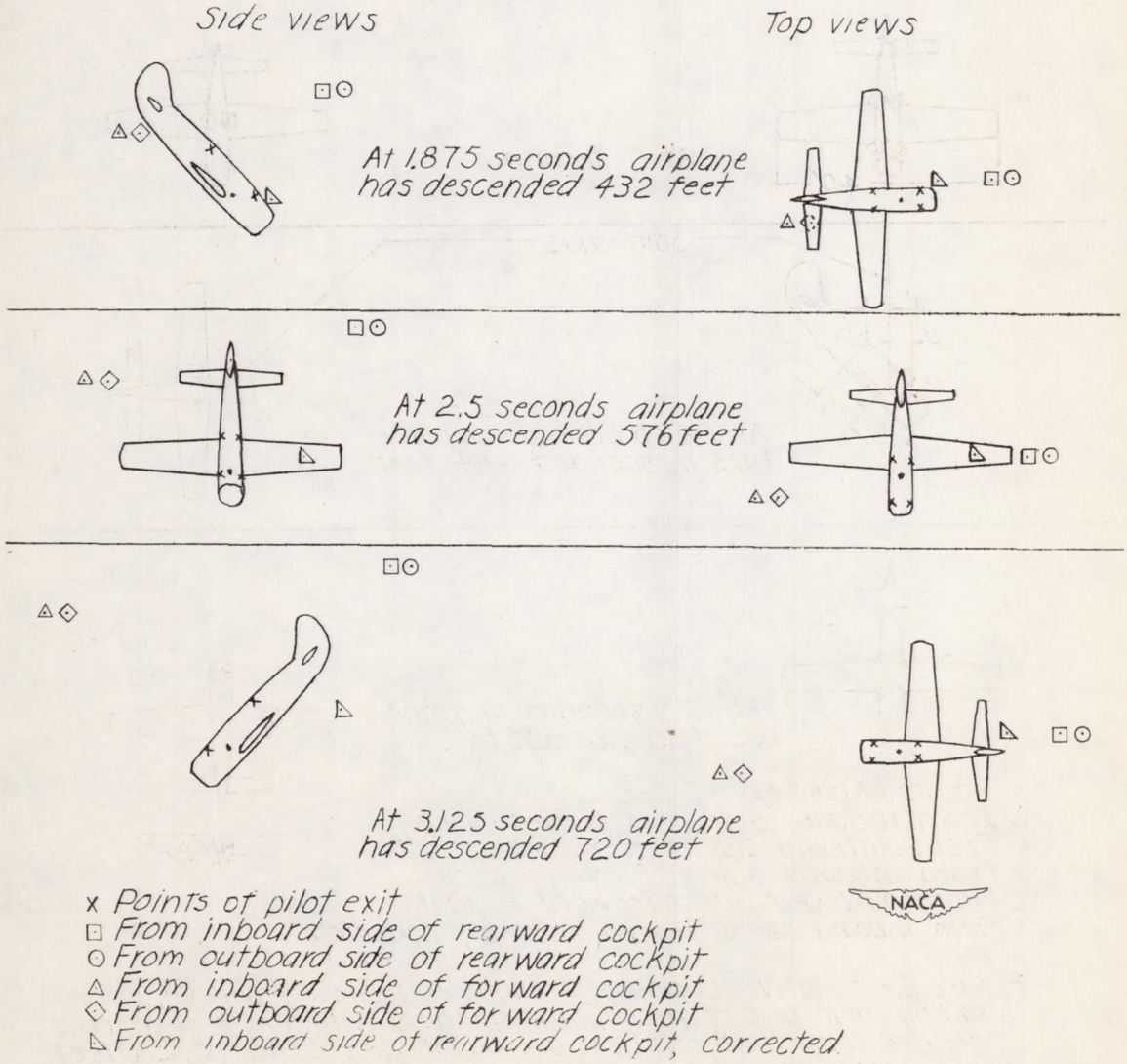

Figure 8.- Concluded.

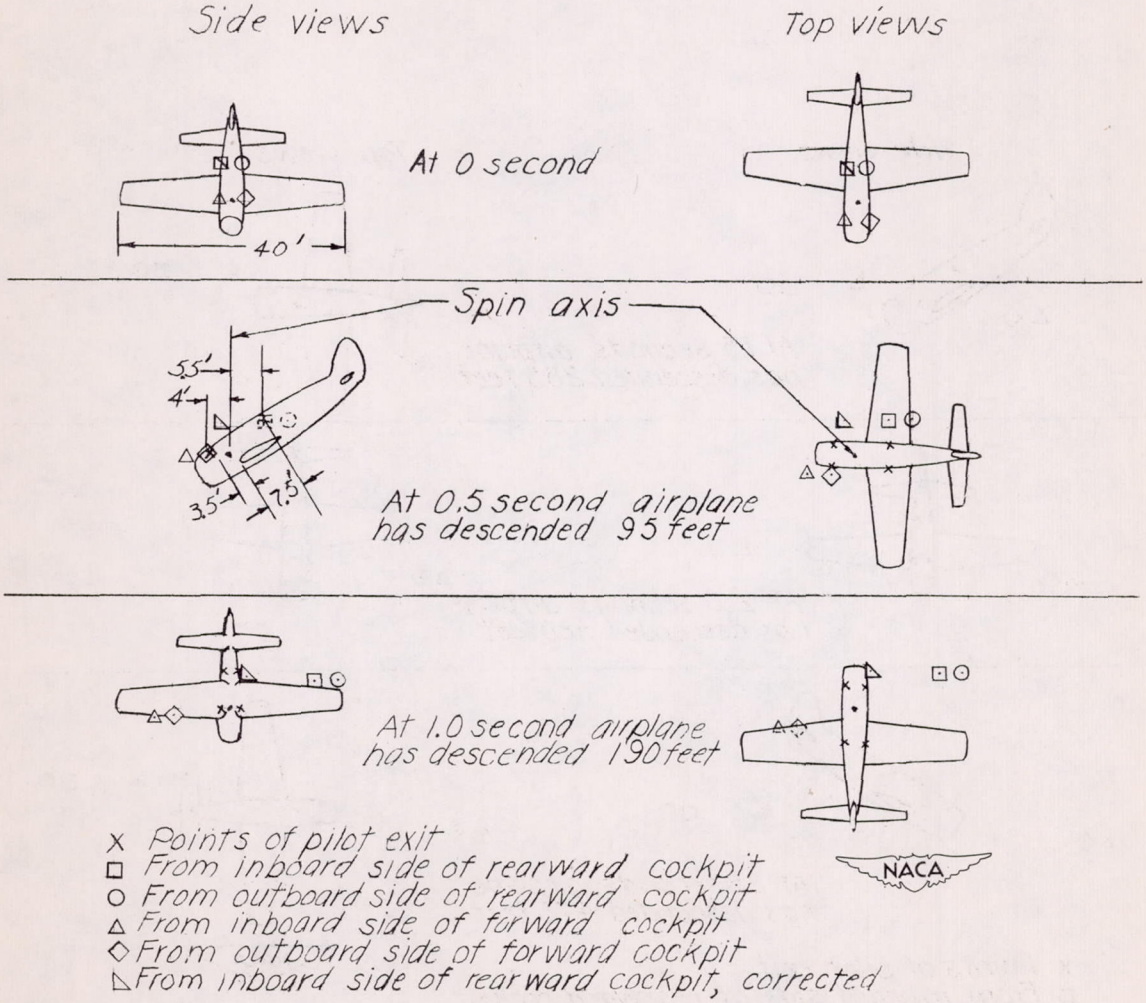

Figure 9.- Relative positions, at intervals following bail-out, of a falling man and of an airplane spinning with a rate of descent less than that of the man. Right spin; $\alpha = 60°$; $V_a = 190$ feet per second; $\Omega = 0.50$ revolutions per second.

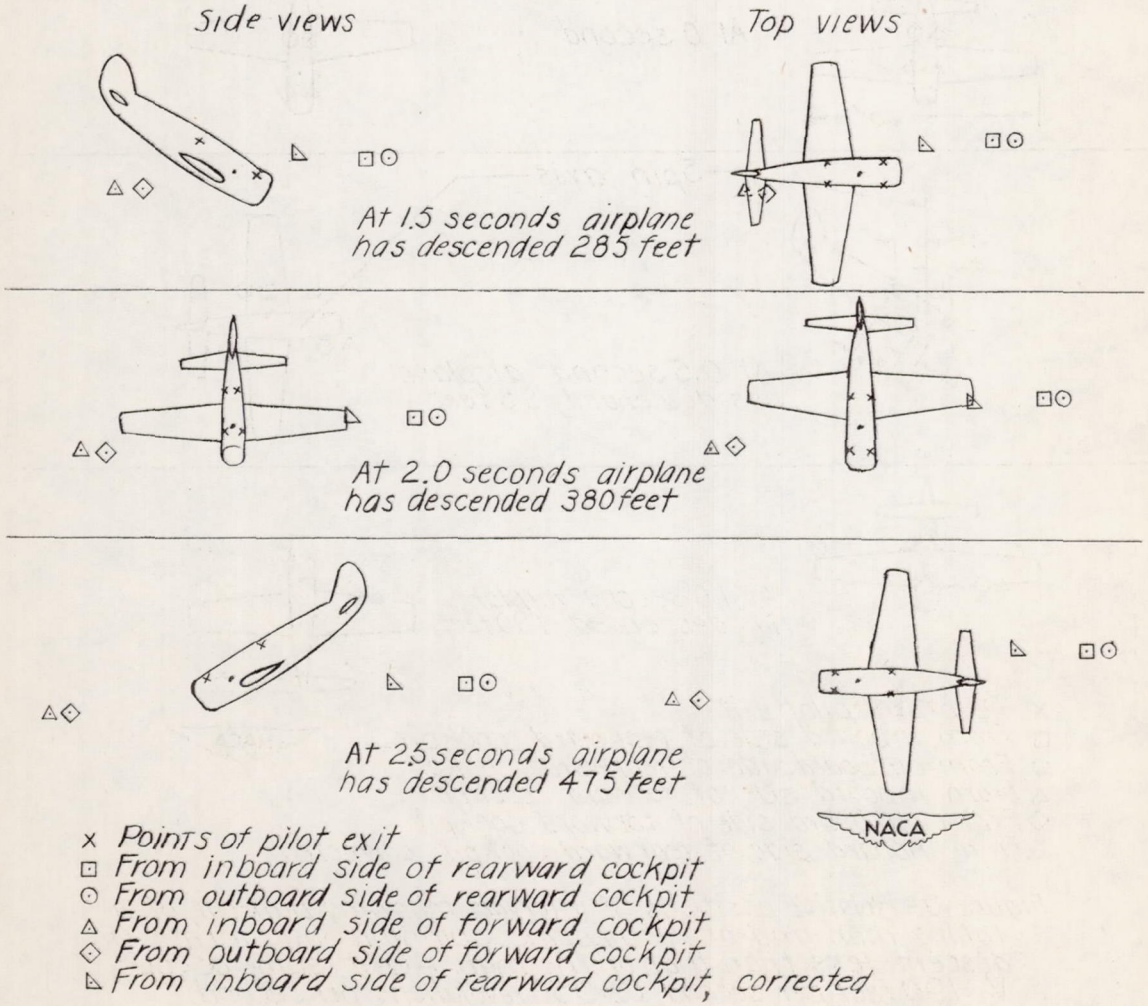

Figure 9.- Concluded.