Y3.N21/5:6/1809
GOVT. DOC.

NACA TN No. 1809

NATIONAL ADVISORY COMMITTEE FOR AERONAUTICS

TECHNICAL NOTE

No. 1809

THE METHOD OF CHARACTERISTICS FOR THE DETERMINATION OF SUPERSONIC FLOW OVER BODIES OF REVOLUTION AT SMALL ANGLES OF ATTACK

By Antonio Ferri

Langley Aeronautical Laboratory
Langley Air Force Base, Va.

Washington
February 1949

CONN. STATE LIBRARY
FEB 14 1949
BUSINESS, SCIENCE
& TECHNOLOGY DEP'T.

629.1309
Wn34

ERRATA

NACA TN 1809

THE METHOD OF CHARACTERISTICS FOR THE DETERMINATION OF SUPERSONIC FLOW OVER BODIES OF REVOLUTION AT SMALL ANGLES OF ATTACK

By Antonio Ferri

February 1949

Page 33, line 2: The sign appearing at the beginning of this line before the term $\left(\frac{dV_1}{dx}\right)_{\lambda_{1b}}$ should be plus instead of minus. Thus, the second line should be

$$+\left(\frac{dV_1}{dx}\right)_{\lambda_{1b}} \frac{\cos(\varphi_1 - \beta_1)}{V_1}\left[\frac{V_2}{V_1}\left(1 + \frac{\gamma - 1}{2 \sin^2\beta_1}\right) \sin \beta_1 - \varphi_2 \cos \beta_1\right] \quad (60e)$$

Page 33, line 9: Citation of reference 4 should be reference 5.

Page 37, line 3: In equation (67), the first term should be

$$v_r\left(2 - \frac{v_n^2}{a^2}\right) \text{ instead of } v_r\left(2 + \frac{v_n^2}{a^2}\right).$$

CONN. STATE LIBRARY

JUN 17 1949

629.1309
Un34

ERRATA

NACA TN 1809

THE METHOD OF CHARACTERISTICS FOR THE DETERMINATION OF SUPERSONIC FLOW OVER BODIES OF REVOLUTION AT SMALL ANGLES OF ATTACK

By Antonio Ferri

February 1949

Pages 32 and 33: Equations (59b), (59d), (60a), (60b), (60c), (60d), and (60e) should read:

$$\frac{dV_2}{V_1} - \tan\beta_1\, d\varphi_2 + \left[\frac{\sin^3\beta_1}{\cos(\varphi_1 + \beta_1)}\frac{1}{\gamma R}\frac{\partial S_2}{\partial n_1} + \varphi_2 A_1 + \frac{V_2}{V_1}P_1 - \frac{w_2}{V_1}\frac{1}{y}\frac{\tan\beta_1 \sin\beta_1}{\cos(\varphi_1 + \beta_1)}\right] dx = 0 \tag{59b}$$

$$\frac{dV_2}{V_1} + \tan\beta_1\, d\varphi_2 - \left[\frac{\sin^3\beta_1}{\cos(\varphi_1 - \beta_1)}\frac{1}{\gamma R}\frac{\partial S_2}{\partial n_1} + \varphi_2 A_2 - \frac{V_2}{V_1}P_2 + \frac{w_2}{V_1}\frac{1}{y}\frac{\tan\beta_1 \sin\beta_1}{\cos(\varphi_1 - \beta_1)}\right] dx = 0 \tag{59d}$$

where

$$A_1 = \frac{1}{\cos\beta_1 \cos(\varphi_1 + \beta_1)}\left[\frac{\sin\beta_1}{y}\sin(\varphi_1 - \beta_1) + \frac{(\sin^4\beta_1)}{\gamma R}\frac{\partial S_1}{\partial n_1} - \frac{1}{V_1}\left(\frac{dV_1}{dx}\right)_{\lambda_{1b}}\frac{\cos(\varphi_1 - \beta_1)}{\sin\beta_1}\right] \tag{60a}$$

$$A_2 = \frac{1}{\cos\beta_1 \cos(\varphi_1 - \beta_1)}\left[\frac{\sin\beta_1}{y}\sin(\varphi_1 + \beta_1) - \frac{(\sin^4\beta_1)}{\gamma R}\frac{\partial S_1}{\partial n_1} - \frac{1}{V_1}\left(\frac{dV_1}{dx}\right)_{\lambda_{1a}}\frac{\cos(\varphi_1 + \beta_1)}{\sin\beta_1}\right] \tag{60b}$$

$$P_1 = \frac{1}{V_1}\left(\frac{dV_1}{dx}\right)_{\lambda_{1a}}\left(\frac{T}{\cos^2\beta_1} - 1\right) - T\left[\frac{2\sin^3\beta_1}{\gamma R\cos(\varphi_1 + \beta_1)}\frac{\partial S_1}{\partial n_1} - \frac{1}{V_1}\left(\frac{dV_1}{dx}\right)_{\lambda_{1b}}\frac{\cos(\varphi_1 - \beta_1)}{\cos^2\beta_1\cos(\varphi_1 + \beta_1)}\right] \tag{60c}$$

$$P_2 = \frac{1}{V_1}\left(\frac{dV_1}{dx}\right)_{\lambda_{1b}}\left(\frac{T}{\cos^2\beta_1} - 1\right) + T\left[\frac{2\sin^3\beta_1}{\gamma R\cos(\varphi_1 - \beta_1)}\frac{\partial S_1}{\partial n_1} + \frac{1}{V_1}\left(\frac{dV_1}{dx}\right)_{\lambda_{1a}}\frac{\cos(\varphi_1 + \beta_1)}{\cos^2\beta_1\cos(\varphi_1 - \beta_1)}\right] \tag{60d}$$

$$T = 1 + \frac{\gamma - 1}{2\sin^2\beta_1} \tag{60e}$$

NACA-Langley - 3-6-51 - 1000

CONN. STATE LIBRARY

MAR 14 1951

NATIONAL ADVISORY COMMITTEE FOR AERONAUTICS

TECHNICAL NOTE NO. 1809

THE METHOD OF CHARACTERISTICS FOR THE DETERMINATION OF SUPERSONIC FLOW OVER BODIES OF REVOLUTION AT SMALL ANGLES OF ATTACK

By Antonio Ferri

SUMMARY

The method of characteristics has been applied for the determination of the supersonic-flow properties around bodies of revolution at a small angle of attack. The system developed considers the effect of the variation of entropy due to the curved shock and determines a flow that exactly satisfies the boundary conditions in the limits of the simplifications assumed. Two practical methods for numerical calculations are given.

INTRODUCTION

For the determination of aerodynamic properties of bodies of revolution at supersonic speeds, two methods have been used: a method that uses the small-disturbances theory and a method that uses the characteristics theory. Both methods are successful in the determination of the flow properties for bodies at zero angle of attack, but the precision of the small-disturbances theory decreases when a body of revolution at an angle of attack is considered.

For bodies of revolution having supersonic flow everywhere, the theory of characteristics can also be used at an angle of attack.

The method of characteristics for the determination of the flow field around bodies of revolution at an angle of attack was first used by Ferrari (reference 1) in 1936. Ferrari considers the flow as potential flow and develops a method for the analysis of the flow field around a body that in the approximation of potential flow appears to be general and can be applied to bodies of any shape and with any angle of attack. In the determination of the flow properties along the first characteristic surface from which the analysis starts, however, Ferrari analyzes the flow around a cone of revolution; and in this part of the analysis only small values of angle of attack are considered.

Sauer in 1942 (reference 2) considers the same problems and shows that for small values of angle of attack, the analysis of the flow

field around a body of revolution can be made by applying the characteristics method only in one meridian plane; and, therefore, Sauer uses characteristic lines in place of the characteristic surfaces considered by Ferrari. Sauer, in the development of his system, is interested essentially in the analysis of the flow around circular cones; and when the method is applied to bodies of revolution of shapes different from cones, the boundary conditions are no longer satisfied. The flow obtained from the solution used, also at small angles of attack, wets a body that is not a body of revolution. The body can be obtained from the body of revolution considered initially by curving its axis of symmetry. Sauer also assumes that the flow is potential flow. With this assumption, the flow must be considered as potential flow for the case of the body at zero angle of attack also; therefore, all the effects of entropy gradients are neglected.

The flow field around circular cones at small angles of attack has been analyzed in a more exact form by Stone. (See references 3 and 4.) In his analysis, Stone considers the flow as rotational flow and, therefore, takes into account the effect of entropy gradients on the velocity distribution. This effect exists only when the cone has an angle of attack and, at low Mach numbers, is small but of the same order as the effect of other parameters that are considered in the analysis.

Here, the method of characteristics is extended to the analysis of the flow field around a body of revolution at small angles of attack for the case of rotational flow. The effect of entropy gradients about bodies of revolution even at small angles of attack can be important because the entropy gradients that exist in the stream for small angles of attack are due to the variation of curvature of the shock existing at zero angle of attack also, together with the fact that the shock surface does not have axial symmetry with respect to the direction of the undisturbed velocity.

The method presented permits the determination of a flow that in the assumption of small angles of attack exactly satisfies the boundary conditions and, therefore, wets the body of revolution considered. This method is given in a form that permits its application to practical problems and requires either numerical or numerical and graphical calculations of the same type as the calculations used for the analysis of the flow around bodies at zero angle of attack. The method can be applied to cases in which the entropy variations can be neglected or are zero. In these cases the terms that contain the entropy variations become zero.

SYMBOLS

x,y,θ	cylindrical coordinates (fig. 1)
r,ψ,θ	polar coordinates (fig. 8)
V	local velocity (function of x, y, θ)

u,v,w	velocity components in cylindrical coordinates (u along x-axis, v along y-axis, and w normal to meridian plane)
v_r,v_n,w	velocity components in polar coordinates (v_r along r, v_n normal to r in meridian plane, and w normal to meridian plane)
V_l	limiting velocity corresponding to adiabatic expansion to zero pressure
p	pressure
ρ	density
γ	ratio of specific heats
a	speed of sound $\left(a^2 = \gamma\frac{p}{\rho}\right)$
α	angle of attack of body
β	Mach angle $\left(\sin \beta = \frac{a}{V}\right)$
φ	angle between velocity V and x-axis
η	angle between the axis of the cone tangent to the shock and the axis of the body
σ	angle at the apex of the cone tangent to the shock
λ_a,λ_b	tangents to the characteristic surfaces in the meridian plane θ = Constant
v_N	velocity component normal to the shock surface
v_T	velocity component along the generatrix of the cone tangent to the shock
w	velocity component tangent to the cross section of the cone tangent to the shock
Ω	angle between the tangent to the shock and the axis of the body
ΔS	entropy variation for unit mass
n	normal to the streamline in the plane θ = Constant
N	normal to the surface of the shock

H,L,K,Z	coefficients defined by equations (24)
A	coefficient defined by equation (41)
Q	coefficient defined by equation (45)
D_1,D_2	coefficients defined by equations (55)
A_1,A_2,P_1,P_2,T	coefficients defined by equations (60)
R	radius of the hodograph diagram

Subscripts:

o	free-stream flow quantities
1	flow quantities for the condition of zero angle of attack
2	flow quantities related to the effect of angle of attack as defined in equations (5), (6), and (8)

The prime (') represents quantities in front of the shock and the double prime (") represents quantities behind the shock.

EQUATION OF MOTION FOR FLOW AROUND A BODY OF REVOLUTION AT A SMALL ANGLE OF ATTACK

Consider a cylindrical coordinate system in which the x-axis is coincident with the axis of the body of revolution, the y-axis is normal to the x-axis in any meridian plane, and the position of every meridian plane is defined by the angle θ measured with respect to the meridian plane that contains the direction of the undisturbed velocity (fig. 1).

Euler's equations of motion for steady flow in cylindrical coordinates are:

$$-\frac{1}{\rho}\frac{\partial p}{\partial x} = \frac{\partial u}{\partial x}u + \frac{\partial u}{\partial y}v + \frac{\partial u}{y\,\partial\theta}w \tag{1a}$$

$$-\frac{1}{\rho}\frac{\partial p}{\partial y} = \frac{\partial v}{\partial x}u + \frac{\partial v}{\partial y}v + \frac{\partial v}{y\,\partial\theta}w - \frac{w^2}{y} \tag{1b}$$

$$-\frac{1}{\rho}\frac{\partial p}{y\,\partial\theta} = \frac{\partial w}{\partial x}u + \frac{\partial w}{\partial y}v + \frac{\partial w}{y\,\partial\theta}w + \frac{vw}{y} \tag{1c}$$

The continuity equation in cylindrical coordinates can be expressed in the form

$$\frac{\partial(\rho u)}{\partial x} + \frac{\partial(\rho v y)}{y\,\partial y} + \frac{\partial(w\rho)}{y\,\partial\theta} = 0 \tag{2}$$

whereas the law of conservation of energy can be written in the form

$$\frac{\gamma}{\gamma-1}\left(\frac{1}{\rho}\frac{\partial p}{\partial x} - \frac{p}{\rho^2}\frac{\partial\rho}{\partial x}\right) = -\left(u\frac{\partial u}{\partial x} + v\frac{\partial v}{\partial x} + w\frac{\partial w}{\partial x}\right) \tag{3a}$$

$$\frac{\gamma}{\gamma-1}\left(\frac{1}{\rho}\frac{\partial p}{\partial y} - \frac{p}{\rho^2}\frac{\partial\rho}{\partial y}\right) = -\left(u\frac{\partial u}{\partial y} + v\frac{\partial v}{\partial y} + w\frac{\partial w}{\partial y}\right) \tag{3b}$$

$$\frac{\gamma}{\gamma-1}\left(\frac{1}{\rho}\frac{\partial p}{y\,\partial\theta} - \frac{p}{\rho^2}\frac{\partial\rho}{y\,\partial\theta}\right) = -\left(u\frac{\partial u}{y\,\partial\theta} + v\frac{\partial v}{y\,\partial\theta} + w\frac{\partial w}{y\,\partial\theta}\right) \tag{3c}$$

If the density is eliminated from equation (2) by means of equations (1) and (3) and the quantity a is introduced defined by

$$a^2 = \gamma\frac{p}{\rho}$$

the following equation can be obtained:

$$\frac{\partial u}{\partial x}\left(1 - \frac{u^2}{a^2}\right) + \frac{\partial v}{\partial y}\left(1 - \frac{v^2}{a^2}\right) + \frac{\partial w}{y\,\partial\theta}\left(1 - \frac{w^2}{a^2}\right) + \frac{v}{y} - \frac{vu}{a^2}\left(\frac{\partial u}{\partial y} + \frac{\partial v}{\partial x}\right)$$

$$- \frac{uw}{a^2}\left(\frac{\partial w}{\partial x} + \frac{\partial u}{y\,\partial\theta}\right) - \frac{vw}{a^2}\left(\frac{\partial v}{y\,\partial\theta} + \frac{\partial w}{\partial y}\right) = 0 \tag{4}$$

In this analysis only small angles of attack will be considered, and, therefore, only the first-order effect of the angle of attack will be determined; whereas the quantities of the same or higher order than the square of the angle of attack will be neglected. In this approximation the velocity components of the flow around the body can be expressed in the following form (references 1 to 4):

$$u = u_1 + \alpha u_2 \cos\theta \tag{5a}$$

$$v = v_1 + \alpha v_2 \cos\theta \tag{5b}$$

$$w = \alpha w_2 \sin \theta \tag{5c}$$

where u, v, and w are functions of the three coordinates x, y, and θ; whereas u_1, v_1, u_2, v_2, and w_2 are functions only of the coordinates x and y of any meridian plane. The quantity α is the angle of attack of the body, the quantities with subscript 1 are the quantities existing at the position (x,y) for the body considered at zero angle of attack at the same Mach number, and the quantities with subscript 2 are functions that take into account the effect of angle of attack.

It will be shown in the following considerations that the form assumed in equations (5) for the velocity components permits the boundary conditions to be satisfied in the simplifications assumed. From equations (5), for small angles of attack,

$$p = p_1 + \alpha p_2 \cos \theta \tag{6a}$$

$$\rho = \rho_1 + \alpha \rho_2 \cos \theta \tag{6b}$$

whereas equation (4) becomes

$$\frac{\partial u}{\partial x}\left(1 - \frac{u^2}{a^2}\right) + \frac{\partial v}{\partial y}\left(1 - \frac{v^2}{a^2}\right) + \frac{v}{y} - \left(\frac{\partial u}{\partial y} + \frac{\partial v}{\partial x}\right)\frac{uv}{a^2} + \frac{\partial w}{y\ \partial \theta} = 0 \tag{7}$$

Equation (7) is similar in form to the corresponding equation for the case of the body at zero angle of attack and differs only in the term $\frac{w}{y\ \partial\theta}$. In order to analyze the differences between this expression and the expression for the axial symmetrical case and in order to obtain another relation that defines the quantity w, the relation between rotation of the flow and entropy gradient will now be introduced.

For perfect flow the entropy variation at any point can be expressed in the form

$$e^{\frac{\gamma-1}{R}\Delta S} = \frac{p}{p_o}\left(\frac{\rho_o}{\rho}\right)^{\gamma}$$

For small angles of attack, therefore, by the use of equations (6),

$$e^{\frac{\gamma-1}{R}\Delta S} = e^{\frac{\gamma-1}{R}\Delta S_1}\left(1 + \alpha\frac{p_2}{p_1}\cos\theta - \gamma\alpha\frac{\rho_2}{\rho_1}\cos\theta\right)$$

or

$$\Delta S = \Delta S_1 + \alpha \, \Delta S_2 \cos \theta \tag{8a}$$

and

$$\Delta S_2 = \frac{R}{\gamma - 1}\left(\frac{p_2}{p_1} - \frac{\gamma \rho_2}{\rho_1}\right) \tag{8b}$$

where ΔS_1 and ΔS_2 are functions only of x and y.

Between rotation of flow and entropy the following relation exists:

$$\text{curl } \overline{V} \times \overline{V} = \frac{a^2}{\gamma R} \text{ grad } S$$

or for small angles of attack

$$\frac{\partial S}{\partial x} \frac{a^2}{\gamma R} = -v\left(\frac{\partial v}{\partial x} - \frac{\partial u}{\partial y}\right) \tag{9a}$$

$$\frac{\partial S}{\partial y} \frac{a^2}{\gamma R} = u\left(\frac{\partial v}{\partial x} - \frac{\partial u}{\partial y}\right) \tag{9b}$$

$$\frac{\partial S}{y \, \partial \theta} \frac{a^2}{\gamma R} = v\left(\frac{\partial w}{\partial y} - \frac{\partial v}{y \, \partial \theta}\right) + \frac{wv}{y} - u\left(\frac{\partial u}{y \, \partial \theta} - \frac{\partial w}{\partial x}\right) \tag{9c}$$

If n is the normal, in the meridian plane θ = Constant, to the local tangent to the streamline, then

$$\begin{aligned} \frac{\partial S}{\partial n} &= -\frac{\partial S}{\partial x}\frac{v}{V} + \frac{\partial S}{\partial y}\frac{u}{V} \\ &= \frac{\gamma R}{a^2} V \left(\frac{\partial v}{\partial x} - \frac{\partial u}{\partial y}\right) \end{aligned} \tag{10}$$

whereas from equation (9c), when equations (5) and (8) are used, it follows that

$$\frac{-a^2}{\gamma R}\frac{\Delta S_2}{y} = v\left(\frac{\partial w_2}{\partial y} + \frac{v_2}{y}\right) + \frac{vw_2}{y} + u\left(\frac{u_2}{y} + \frac{\partial w_2}{\partial x}\right) \tag{11}$$

or

$$v\frac{\partial w_2}{\partial y} + u\frac{\partial w_2}{\partial x} = -\frac{vw_2 + vv_2 + uu_2}{y} - \frac{a^2}{y\gamma R}\Delta S_2 \tag{12}$$

Equation (7) can be written in the following form:

$$\frac{\partial u}{\partial x}\left(1 - \frac{u^2}{a^2}\right) + \frac{\partial v}{\partial y}\left(1 - \frac{v^2}{a^2}\right) + \frac{v}{y} - \frac{2uv}{a^2}\frac{\partial v}{\partial x} + \frac{uv}{V\gamma R}\frac{\partial S}{\partial n} + \frac{\partial w}{y\,\partial\theta} = 0 \tag{13}$$

Equation (13) together with equation (12) defines the law of motion of the flow around the body at small angles of attack. This equation will be used as a basis for the calculation of the flow field by the method of characteristics to be treated in a later section.

CONDITIONS AT THE SHOCK FRONT

Equations (5) and (6) represent a stream that wets a body of revolution at a small angle of attack. In order to satisfy the boundary conditions at the surface of the body, the functions u_2, v_2, and w_2 must be properly selected. Equations (5) and (6) must, however, satisfy the boundary conditons at the shock surface also in order to be a solution of the problem. It is necessary, therefore, to show that a shock surface can exist across which the undisturbed stream inclined at α with respect to the axis of the body is transformed into a flow represented by equations (5) and (6).

In order to show that the shock boundary conditions can be satisfied, the following procedure will be employed. A shock surface distorted in a manner to be described is assumed. Then, the free-stream velocity ahead of the shock will be resolved into three components: v_N normal to the shock, v_T tangent to the shock in the plane θ = Constant, and w perpendicular to the plane θ = Constant. Similarly, the flow behind the shock will be resolved into three components. In addition, each component of the flow behind the shock will be divided into two terms: one term for zero angle of attack and one term for the difference due to the angle of attack (for example, $u = u_1 + \alpha u_2 \cos\theta$). Then,

the conditions of equilibrium at the shock will be imposed, and it will be shown that the terms u_2, v_2, and w_2 at the shock are independent of θ when the angle of attack is small as initially assumed; hence, the distorted shock is consistent with the field of flow behind it. Such a shock surface can be obtained by deforming the shock surface produced by the body when the angle of attack α is zero in the following way (fig. 2):

When $\alpha = 0$, the shock surface is a surface of revolution in axis with the body; therefore, if OP,OP' is the curve intersection of the shock with the meridian plane $\theta = 0$, then for $\alpha = 0$, the tangent AQ at any point Q of the curve OP is the generatrix of a circular cone having the vertex at a point A of the axis and tangent along the circle QQ' to the shock surface. The shock surface, therefore, can be considered as a surface envelope of circular cones having the axis coincident with the axis of the body but having variable cone angle and variable position of the apex A along the axis AB of the body. For the case of $\alpha \neq 0$ the shock surface is not a surface of revolution but can still be considered, for small angles of attack, as the envelope of the same circular cones considered for the case $\alpha = 0$. These cones have the same apexes and the same cone angles as the cases for $\alpha = 0$ but do not have the axis of symmetry AB coincident with the axis of the body AB although they are rotated in the plane $\theta = 0$ with respect to the body axis. The angle η through which each axis of the cones must rotate in the plane $\theta = 0$ with respect to the axis of the body, is not constant but varies for each cone considered. For example, the cone AQQ' tangent to the shock surface for $\alpha = 0$, when $\alpha \neq 0$, must be rotated by an angle η to the position AQ_1Q_1'; the axis AB_1 remains in the plane $\theta = 0$.

The shock surface so generated is consistent with the flow represented by equations (5) and (6), and this can be shown in the following way:

Consider a point P of the shock produced by the body at an angle of attack, and consider the cone tangent to the shock at the point P (fig. 3). Call σ the semiangle of the cone with respect to its axis of symmetry. The axis of this cone is inclined at an angle η with respect to the axis of the body and lies in the plane $\theta = 0$.

The uniform velocity V_o ahead of the shock is decomposed in the three components: v_N' in the direction PB normal to the shock, v_T' in the direction AP along the generatrix of the cone, and w' in the direction normal to the plane APB. These components are, at small angles of attack,

$$v_N' = V_o \sin \sigma - V_o(\alpha - \eta)\cos \sigma \cos \theta \tag{14a}$$

$$v_T' = V_o \cos \sigma + V_o(\alpha - \eta)\sin \sigma \cos \theta \tag{14b}$$

$$w' = -V_o(\alpha - \eta)\sin \theta \tag{14c}$$

Strictly, in equations (14) ψ must be written in place of θ; but, for small angles of attack in equations (14), the difference between ψ and θ can be neglected. Indeed,

$$\psi = \delta + \theta'$$

where δ is of the order of α, and θ' differs from θ by a quantity of the order of α.

The velocity components behind the shock are (fig. 3)

$$v_N'' = u \sin \sigma - v \cos \sigma + \eta \cos \theta(v \sin \sigma + u \cos \sigma) \tag{15a}$$

$$v_T'' = u \cos \sigma + v \sin \sigma + \eta \cos \theta(v \cos \sigma - u \sin \sigma) \tag{15b}$$

$$w'' = w + \eta(u - v \cot \sigma) \sin \theta \tag{15c}$$

where u, v, and w are the velocity components behind the shock in cylindrical coordinates in axis with the body at the point P considered.

The velocity components u, v, and w at the point P can be expressed in the form given by equations (5), in which the components u_1 and v_1 are the quantities obtained at the point P for the condition of $\alpha = 0$ and are direct functions only of x and y. The point P, however, is a point of the shock, and its coordinates x and y change when the coordinate θ changes; therefore, the velocity components u_1 and v_1 at P also change with θ_1. In order to separate the part of the components u, v, and w dependent on θ from the part independent of θ, the velocity components u_1 and v_1 at P will now be expressed as a function of the flow properties at a point P_1 near P, having a constant value of x and y for every value of θ.

Now, it has been assumed that the angle of the cone σ tangent to the shock at the point P is equal to the angle of the cone tangent to the shock for the condition of zero angle of attack at the point P_1 (fig. 4). The point P_1 is obtained on the shock by rotating the cone APQ tangent to the shock for the condition $\alpha = 0$ through an angle η around the axis AN normal to the plane $\theta = 0$ at the apex A of the cone. Because for the condition of zero angle of attack the velocity components u_1 and v_1 are independent of the coordinate θ, the velocity components u_1 and v_1 at $P(x_P,y_P)$ (fig. 4) are equal to the velocity components at $P_2(x_P,y_P)$, in the plane AP_1C. Therefore, if ΔN is the distance P_2P_1,

$$u_{1_P} = u_{1_{P_1}} + \left(\frac{\partial u_1}{\partial N}\right)_{P_1} \Delta N \tag{16a}$$

$$v_{1_P} = v_{1_{P_1}} + \left(\frac{\partial v_1}{\partial N}\right)_{P_1} \Delta N \tag{16b}$$

where (fig. 4)

$$\Delta N = \frac{x_{P_1}\eta}{\cos\sigma} \cos\theta \tag{17}$$

Substituting equations (5), (16), and (17) in equations (15) results in

$$\begin{aligned} v_N'' = {} & (u_1 \sin\sigma - v_1 \cos\sigma)_{P_1} \\ & + \alpha \cos\theta(u_2 \sin\sigma - v_2 \cos\sigma)_{P_1} \\ & + \eta \cos\theta(u_1 \cos\sigma + v_1 \sin\sigma)_{P_1} \\ & + \frac{x_{P_1}\eta}{\cos\sigma} \cos\theta\left(\frac{\partial u_1}{\partial N} \sin\sigma - \frac{\partial v_1}{\partial N} \cos\sigma\right)_{P_1} \end{aligned} \tag{18a}$$

$$\begin{aligned} v_T'' = {} & (u_1 \cos\sigma + v_1 \sin\sigma)_{P_1} \\ & + \alpha \cos\theta(u_2 \cos\sigma + v_2 \sin\sigma)_{P_1} \\ & - \eta \cos\theta(u_1 \sin\sigma - v_1 \cos\sigma)_{P_1} \\ & + \frac{x_{P_1}\eta}{\cos\sigma} \cos\theta\left(\frac{\partial u_1}{\partial N} \cos\sigma + \frac{\partial v_1}{\partial N} \sin\sigma\right)_{P_1} \end{aligned} \tag{18b}$$

$$w'' = \alpha w_{2_{P_1}} \sin\theta + \eta(u_1 - v_1 \cot\sigma)_{P_1} \sin\theta \tag{18c}$$

For the condition of zero angle of attack at P_1

$$v_{N_1}'' = u_1 \sin \sigma - v_1 \cos \sigma \tag{19a}$$

$$v_{T_1}'' = u_1 \cos \sigma + v_1 \sin \sigma \tag{19b}$$

and for the condition of the equilibrium at the shock at zero angle of attack

$$V_o \cos \sigma = v_{T_1}'' \tag{20a}$$

$$v_{N_1}'' \, V_o \sin \sigma = \frac{\gamma - 1}{\gamma + 1} \left(V_l^2 - v_{T_1}''^2 \right) \tag{20b}$$

At the point P for the case of a small angle of attack,

$$\left(v_N' v_N'' \right)_P = \frac{\gamma - 1}{\gamma + 1} \left(V_l^2 - v_T''^2 \right)_P \tag{21a}$$

$$V_{T_P}'' = V_{T_P}' \tag{21b}$$

$$w'' = w' \tag{21c}$$

If equations (19) are used, equations (18a) and (18b) can be written in the form

$$\left(v_N''\right)_P = \left(v_{N_1}''\right)_{P_1} + \alpha \cos \theta \left(v_{N_2}''\right)_{P_1} + \eta \cos \theta \left(v_{T_1}''\right)_{P_1}$$

$$+ \frac{x_{P_1}\eta}{\cos \sigma} \cos \theta \left(\frac{\partial v_{N_1}''}{\partial N}\right)_{P_1}$$

$$\left(v_T''\right)_P = \left(v_{T_1}''\right)_{P_1} + \alpha \cos \theta \left(v_{T_2}''\right)_{P_1} - \eta \cos \theta \left(v_{N_1}''\right)_{P_1}$$

$$+ \frac{x_{P_1}\eta}{\cos \sigma} \cos \theta \left(\frac{\partial v_{T_1}''}{\partial N}\right)_{P_1}$$

Therefore, from equations (14), (20), and (21),

$$-(\alpha - \eta)V_o \cos \sigma \left(v_{N_1}''\right)_{P_1} + V_o \sin \sigma \left(\alpha v_{N_2}'' + \eta v_{T_1}'' + \frac{x_{P_1}\eta}{\sin \sigma} \frac{\partial v_{N_1}''}{\partial N}\right)_{P_1}$$

$$= -\frac{2(\gamma - 1)}{\gamma + 1} V_o^2 \cos \sigma \sin \sigma (\alpha - \eta) \tag{22a}$$

$$(\alpha - \eta)V_o \sin \sigma = \left(v_{T_2}''\right)_{P_1} \alpha - \eta \left(v_{N_1}''\right)_{P_1} + \frac{x_{P_1}\eta}{\sin \sigma} \left(\frac{\partial v_{T_1}''}{\partial N}\right)_{P_1} \tag{22b}$$

or

$$\left(\frac{v_{T_2}''}{V_o}\right)_{P_1} = \left(1 - \frac{\eta}{\alpha}\right) \sin \sigma + \frac{\eta}{\alpha} \left(\frac{v_{N_1}''}{V_o}\right)_{P_1} - \frac{\eta}{\alpha} \frac{x_{P_1}}{\sin \sigma} \frac{1}{V_o} \left(\frac{\partial v_{T_1}''}{\partial N}\right)_{P_1} \tag{23a}$$

$$\left(\frac{v_{N_2}''}{V_o}\right)_{P_1} = \frac{1}{\tan\sigma} - 2\left(\frac{\gamma - 1}{\gamma + 1}\right)\left(1 - \frac{\eta}{\alpha}\right)\sin\sigma + \left(1 - \frac{\eta}{\alpha}\right)\left(\frac{v_{N_1}''}{V_o}\right)_{P_1}$$

$$- \frac{\eta}{\alpha}\sin\sigma - \frac{\eta}{\alpha}\frac{x_{P_1}}{\cos\sigma}\frac{1}{V_o}\left(\frac{\partial v_{N_1}''}{\partial N}\right)_{P_1} \tag{23b}$$

$$\left(\frac{w_2}{V_o}\right)_{P_1} = -\left(1 - \frac{\eta}{\alpha}\right) + \left(\frac{-u_1 + v_1\cot\sigma}{V_o}\right)_{P_1}\frac{\eta}{\alpha} \tag{23c}$$

In equations (23) the coordinate θ does not appear; therefore, for the shock considered, the functions u_2, v_2, and w_2 are independent of θ, and equations (5) represent a flow condition in agreement with the conditions at the shock.

The ratio η/α which appears in equations (23) is independent of α; therefore, for a given point P_1, η/α remains constant in all the range of angle of attack in which the simplifications assumed are valid. (Indeed, u_2, v_2, and w_2 are also independent of the angle of attack (equations (6)). The values of u_2, v_2, w_2, and η/α must therefore be determined only for one value of the angle of attack.

METHOD OF CHARACTERISTICS FOR FLOW AROUND A BODY OF REVOLUTION AT A SMALL ANGLE OF ATTACK

In this section the method of characteristics is applied to equation (13) to establish equations which will permit the flow field behind the shock to be calculated by a point-by-point process. If the flow is anywhere supersonic, equations (12) and (13) permit the determination of the flow around a body of revolution at a small angle of attack by using the method of characteristics. Equation (13) can be written in the following form:

$$H\frac{\partial u}{\partial x} + L\frac{\partial v}{\partial y} + 2K\frac{\partial v}{\partial x} + Z = 0$$

where

$$\left.\begin{aligned} H &= 1 - \frac{u^2}{a^2} \\ L &= 1 - \frac{v^2}{a^2} \\ K &= -\frac{uv}{a^2} \\ Z &= \frac{uv}{V}\frac{1}{\gamma R}\frac{\partial S}{\partial n} + \frac{\partial w}{y\,\partial\theta} + \frac{v}{y} \end{aligned}\right\} \tag{24}$$

If φ is the angle between the velocity V and the x-axis and β is the Mach angle,

$$\tan\varphi = \frac{\sqrt{v^2 + w^2}}{u}$$

$$\sin\beta = \frac{a}{V}$$

or for small angles of attack

$$\tan\varphi = \frac{v}{u}$$

and

$$\sin\beta = \frac{a}{\sqrt{v^2 + u^2}}$$

The tangent to the line intersection of a characteristic surface with the meridian plane θ = Constant is

$$\left.\begin{aligned} \lambda_a &= \tan(\varphi + \beta) = \frac{K}{H} - \frac{1}{H}\sqrt{K^2 - HL} \\ \lambda_b &= \tan(\varphi - \beta) = \frac{K}{H} + \frac{1}{H}\sqrt{K^2 - HL} \end{aligned}\right\} \tag{25}$$

where λ_a is the tangent to a line corresponding to the characteristic surface of the first family and λ_b is the tangent to a line corresponding to the characteristic surface of the second family. The terms λ_a and λ_b are solutions of the equations (reference 5)

$$H\lambda^2 - 2K\lambda + L = 0 \tag{26}$$

Because u, v, V, and a can be considered to be given by an equation of the type of equations (5), φ and β can also be written in the form

$$\varphi = \varphi_1 + \alpha\varphi_2 \cos\theta$$

$$\beta = \beta_1 + \alpha\beta_2 \cos\theta$$

The characteristic surfaces are not, therefore, surfaces of revolution but can be obtained, as was true for the case of the shock, as an envelope of circular cones with their apexes at the axis of the body and their axis of symmetry in the plane $\theta = 0$ and inclined with the axis of the body.

The determination of the u and v components of the velocity in any point of the flow can be obtained by equation (13) by performing a transformation in order to obtain a law of variation along the characteristic lines (reference 5). Indeed, for every point of any meridian plane (for example, of the meridian plane $\theta = 0$, or $\theta = \frac{\pi}{2}$) two characteristic lines can be obtained as the intersection of two characteristic surfaces with the meridian plane. Along these lines the variation of the u and v velocity components is determined by the equations of characteristics that can be derived from equation (13). Assume that in two points P_1 and P_2 (fig. 5) of the meridian plane θ = Constant

$\left(\text{for example, } \theta = 0, \text{ or } \theta = \frac{\pi}{2}\right)$ the velocity components are known. From equations (25) the tangents to the characteristic surfaces in this meridian plane can be drawn and the velocity components u and v at the point P_3, intersection of the two tangents, can be obtained in the first approximation.

The equations of characteristics can be obtained by analyzing equation (13) along the characteristic lines given by equation (25) in the following way: If du and dv are the variations along the characteristic lines,

$$\frac{du}{dx} = \frac{\partial u}{\partial x} + (\lambda_a,\lambda_b)\frac{\partial u}{\partial y}$$

or (see equation (10))

$$\frac{du}{dx} = \frac{\partial u}{\partial x} + (\lambda_a,\lambda_b)\frac{\partial v}{\partial x} - (\lambda_a,\lambda_b)\frac{a^2}{\gamma RV}\frac{\partial S}{\partial n}$$

$$\frac{dv}{dx} = \frac{\partial v}{\partial x} + (\lambda_a,\lambda_b)\frac{\partial v}{\partial y} \tag{27a}$$

then

$$\frac{du}{dx} = \frac{\partial u}{\partial x} + \lambda\frac{dv}{dx} - \lambda^2\frac{\partial v}{\partial y} - \lambda\frac{a^2}{\gamma RV}\frac{\partial S}{\partial n} \tag{27b}$$

If equations (27a) and (27b) are substituted in equation (13), and using equation (26), along the characteristic line of the first family defined by

$$\frac{dy}{dx} = \lambda_a = \tan(\beta + \varphi) \tag{28a}$$

there results

$$\frac{du}{dx} + \lambda_b\frac{dv}{dx} - \frac{a^2}{\gamma RV}\frac{dS}{dn}\left(\frac{K}{H} - \lambda_a\right) + \left(\frac{v}{y} + \frac{\partial w}{y\,\partial\theta}\right)\frac{1}{H} = 0 \tag{28b}$$

and along the characteristic line of the second family defined by

$$\frac{dy}{dx} = \lambda_b = \tan(\varphi - \beta) \tag{28c}$$

there results

$$\frac{du}{dx} + \lambda_a \frac{dv}{dx} - \frac{a^2}{\gamma VR} \frac{dS}{dn}\left(\frac{K}{H} - \lambda_b\right) + \left(\frac{v}{y} + \frac{\partial w}{y\ \partial\theta}\right)\frac{1}{H} = 0 \tag{28d}$$

Equations (28b) and (28d) contain the term $\frac{\partial w}{y\ \partial\theta}$, but at small angles of attack

$$\frac{\partial w}{y\ \partial\theta} = \frac{w_2\alpha}{y} \cos\theta = \frac{w}{y} \cot\theta$$

and, therefore, $\frac{\partial w}{y\ \partial\theta}$ is known at the points P_1 and P_2. The value of the entropy is also known at the points P_1 and P_2 and, therefore, the value of $\frac{dS}{dn}$ can be determined (reference 5)

$$\frac{dS}{dn} = \frac{\Delta S_{P_2} - \Delta S_{P_1}}{\left(x_{P_3} - x_{P_1}\right)\left[\frac{\sin\beta}{\cos(\beta + \varphi)}\right]_{P_1} + \left(x_{P_3} - x_{P_2}\right)\left[\frac{\sin\beta}{\cos(\varphi - \beta)}\right]_{P_2}} \tag{29}$$

From equations (28) and (29) the values of u and v can be determined in the first approximation for the point P_3. In order to determine the value of w at P_3, the following procedure can be used:

If s is the projection of the streamline in the meridian plane considered (fig. 5) and P_3 is a point near P_1 and P_2,

$$\frac{dw_2}{ds} = \frac{\partial w_2}{\partial y} \sin\varphi + \frac{\partial w_2}{\partial x} \cos\varphi$$

$$= \frac{\partial w_2}{\partial y}\frac{v}{V} + \frac{\partial w_2}{\partial x}\frac{u}{V}$$

or from equation (12)

$$\frac{\partial w_2}{\partial s} = -\frac{vw_2 + vv_2 + uu_2}{yV} - \frac{\sin^2\beta V\ \Delta S_2}{\gamma R y} \tag{30}$$

Now (fig. 5)

$$w_{2_E} = w_{2_{P_1}} + \left(\frac{dw_2}{ds}\right)_{P_1} \left(x_{P_3} - x_{P_1}\right) \left[\frac{\cos\beta}{\cos(\beta + \varphi)}\right]_{P_1} \tag{31a}$$

$$w_{2_F} = w_{2_{P_2}} + \left(\frac{dw_2}{ds}\right)_{P_2} \left(x_{P_3} - x_{P_2}\right) \left[\frac{\cos\beta}{\cos(\varphi - \beta)}\right]_{P_2} \tag{31b}$$

and

$$\left(\frac{dw_2}{dn}\right)_E = \frac{w_{2_F} - w_{2_E}}{\left(x_{P_3} - x_{P_1}\right)\left[\frac{\sin\beta}{\cos(\varphi + \beta)}\right]_{P_1} + \left(x_{P_3} - x_{P_2}\right)\left[\frac{\sin\beta}{\cos(\varphi - \beta)}\right]_{P_2}} \tag{32}$$

Therefore,

$$w_{2_{P_3}} = w_{2_E} + \left(\frac{\partial w_2}{\partial n}\right)_E \left(x_{P_3} - x_{P_1}\right)\left[\frac{\sin\beta}{\cos(\varphi + \beta)}\right]_{P_1} \tag{33}$$

The values of u, v, w, and ΔS are known at the points P_1 and P_2; therefore, the values of u_2, v_2, w_2, and ΔS_2 at the same points can be calculated from equations (5) and (8). Indeed, u_1, v_1, and ΔS_1 at those points are known from the determination of the flow for $\alpha = 0$; therefore, from equations (30) to (33) the value of w_2 at P_3 can be determined.

After the velocity components u, v, and w at P_3 have been determined in the first approximation, a second approximation can be determined by assuming the average values between the corresponding values at the points P_2 and P_3 or P_1 and P_3 for all the coefficients. After the velocity components at a point P_3 have been obtained, the velocity components at any other point having the same x

and y coordinates as P_3 but a different coordinate θ can be calculated from equations (5).

For practical calculations, equations (28) can be transformed in the following form:

$$\lambda_a = \tan(\beta + \varphi) \tag{34a}$$

$$\frac{dV}{V} - d\varphi \tan \beta - \left[\left(\frac{\sin \varphi}{y} + \frac{\partial w}{yV\ \partial\theta}\right) \tan \beta - \frac{\sin^2\beta}{\gamma R} \frac{dS}{dn}\right] \frac{\sin \beta}{\cos(\varphi + \beta)} dx = 0 \tag{34b}$$

$$\lambda_b = \tan(\varphi - \beta) \tag{34c}$$

$$\frac{dV}{V} + d\varphi \tan \beta - \left[\left(\frac{\sin \varphi}{y} + \frac{\partial w}{yV\ \partial\theta}\right) \tan \beta + \frac{\sin^2\beta}{\gamma R} \frac{dS}{dn}\right] \frac{\sin \beta}{\cos(\varphi - \beta)} dx = 0 \tag{34d}$$

$$\frac{1}{V} \frac{dw_2}{ds} = -\frac{1}{y} \frac{V_2}{V} - \frac{w_2}{Vy} \sin \varphi - \frac{\sin^2\beta}{\gamma R} \frac{\Delta S_2}{y} \tag{34e}$$

and

$$\varphi = \varphi_1 + \alpha\varphi_2 \cos \theta \tag{35}$$

where

$$\varphi_2 = \frac{v_2}{V_1} \cos \varphi_1 - \frac{u_2}{V_1} \sin \varphi_1 \tag{36}$$

and

$$V = V_1 + \alpha V_2 \cos \theta \tag{37}$$

where

$$V_2 = u_2 \cos \varphi_1 + v_2 \sin \varphi_1 \tag{38}$$

At the surface of the body the calculations are similar to the case of zero angle of attack because the entropy at the surface of the body is known in every meridian plane and the value of θ is given. Equation (34e) gives the variation of w_2 along the body; therefore,

the value of w_2 can be obtained directly from another point on the body in the same meridian plane.

At the surface of the shock the system of calculations is similar to the system for zero angle of attack. In figure 6 the point P_3 is at the intersection of the tangents to the first characteristic surface at P_1 and to the shock at P_2 in the meridian plane θ = Constant. The equations of the shock and equation (34b) must be verified at P_3, which is assumed as a point of the shock in the first approximation.

In the plane $\theta = 0$, w is zero and the values of V, ΔS, and φ behind the shock are functions only of the value of Ω; and for any value of Ω, the values of V, ΔS, and φ can be obtained from the equations of the shock

$$\frac{\cos(\Omega - \alpha)}{\cos(\Omega - \varphi)} = \frac{V}{V_o} = \frac{V/V_l}{V_o/V_l} \tag{39a}$$

$$\frac{1}{\tan(\varphi - \alpha)} = \left[\frac{\gamma - 1}{2} \frac{M_o^2}{M_o^2\sin^2(\Omega - \alpha) - 1} - 1\right]\tan(\Omega - \alpha) \tag{39b}$$

$$\Delta S = \frac{R}{\gamma - 1} \log_e \gamma\left(\frac{2}{\gamma + 1}\right)^{\gamma+1}\left[M_o^2\sin^2(\Omega - \alpha) - \frac{\gamma - 1}{2\gamma}\right]\left[\frac{1}{M_o^2\sin^2(\Omega - \alpha)} + \frac{\gamma - 1}{2}\right]^{\gamma} \tag{39c}$$

and

$$\frac{V_l^2}{V_o^2} = 1 + \frac{2}{\gamma - 1}\frac{1}{M_o^2} \tag{39d}$$

If the plane $\theta = \frac{\pi}{2}$ is considered, the sign of α in equations (39) must be reversed.

From equations (39) the values of V and ΔS can be determined

as a function of φ; then $\frac{dV}{d\varphi}$ and $\frac{d\,\Delta S}{d\varphi}$ as a function of φ can be evaluated. Now, if φ_{P_1} is the direction of the velocity at P_1, the velocity at P_3 will have the direction

$$\varphi_{P_3} = \varphi_{P_1} + \Delta\varphi$$

Therefore, the velocity at P_3 must correspond to a deviation across the shock of $\varphi_{P_3} - \alpha$ and can be expressed as

$$V_{P_3} = V_{\varphi_{P_1}} + \left(\frac{dV}{d\varphi}\right)_{\varphi_{P_1}} \Delta\varphi$$

where $V_{\varphi_{P_1}}$ is the velocity behind the shock corresponding to the direction φ_{P_1}. In a similar way,

$$\Delta S_{P_3} = \Delta S_{\varphi_{P_1}} + \left(\frac{d\,\Delta S}{d\varphi}\right)_{\varphi_{P_1}} \Delta\varphi$$

Therefore, equation (34b) at the point P_1 becomes

$$\frac{V_{\varphi_{P_1}}}{V_{P_1}} - 1 + \frac{1}{V_{P_1}}\left(\frac{\partial V}{\partial\varphi}\right)_{\varphi_{P_1}} \Delta\varphi - \tan\beta_{P_1}\,\Delta\varphi$$

$$- \left[\left(\frac{\sin\varphi}{y} + \frac{w_2\alpha\cos\theta}{yV}\right)\frac{\sin\beta\tan\beta}{\cos(\beta+\varphi)}\right]_{P_1} dx$$

$$+ \left[\Delta S_{\varphi_{P_1}} - \Delta S_{P_1} + \left(\frac{d\,\Delta S}{d\varphi}\right)_{\varphi_{P_1}} \Delta\varphi\right]\frac{\sin^2\beta_{P_1}}{\gamma R} = 0 \qquad (40)$$

In equation (40), $\Delta\varphi$ is the only unknown and, therefore, can be determined. From the value of φ the value of Ω_{P_3} and the value of V_{P_3} can be determined; and a second approximation for the position of P_3 and its value of the velocity can be calculated if the corresponding average values between P_3 and P_1 are assumed for φ, β, and all the coefficients of equation (40).

The value of w at P can be obtained from equation(23c) in which η is given by figure 6 as

$$\eta = \frac{dN}{y_{P_3}} \sin \Omega$$

where $\eta = \Omega - \sigma$ for $\theta = 0$ and $\eta = \sigma - \Omega$ for $\theta = \frac{\pi}{2}$. The value of σ corresponding to the point P_4 on the shock for $\alpha = 0$ is given by the relation

$$\frac{y_{P_4}}{\sin \sigma} = \frac{y_{P_3}}{\sin \Omega}$$

and $y_{P_4} = f\left(\sigma_{P_4}\right)$ is the curve that represents the shock for $\alpha = 0$.

PRACTICAL APPLICATION OF THE CHARACTERISTIC SYSTEM

Graphical Numerical Method

The analytical part of the characteristic system used for determining the flow field about a body of revolution at an angle of attack is similar to the system used for a body of revolution at zero angle of attack (reference 5), but the practical numerical application is slightly more involved. In equation (34e) the values of V_2 and ΔS_2 must be known in order to determine the value of w_2 and must be determined from equations (37), (36), and (8), where the values of V_1 and ΔS_1 are considered known in the entire flow field and given by the determination from the case of zero angle of attack. In the practical case, however, the values of V_1, φ_1, and ΔS_1 have been obtained with

the characteristic system only in a finite number of points at the intersections of the characteristic net; and the characteristic net for the case of zero angle of attack is different from the net used for the case of a body with a small angle of attack. In order, therefore, to obtain the values of V_1 and ΔS_1 at the intersections of the characteristic lines for the case with a given angle of attack, a complicated interpolation of the values V_1 and ΔS_1 would be necessary if the two characteristic nets for zero angle of attack and for a given angle of attack were constructed independently.

In order to reduce the numerical work to a minimum, the two following methods can be used, the first of which is practical when a graphical numerical calculation is performed, whereas the second can be more convenient when automatic computing machines are used.

In both cases the calculations start with the determination of the flow at an angle of attack around a cone when the body considered is a pointed-nose body of revolution or with the determination of the shock at the lip of the body if the body is an open-nose body of revolution. (The tangent to the shock at the lip can be determined with the two-dimensional theory.) The flow around a cone at an angle of attack has been determined and tabulated in reference 3; whereas the flow for zero angle of attack has been tabulated in reference 6. A different method for determining the flow around a circular cone at an angle of attack is given in the appendix. It can be assumed, therefore, that the flow along the first characteristic line of the first family at the end of the conical region in the plane θ = Constant $\left(\text{for example, } \theta = \frac{\pi}{2}\right)$ is known (fig. 7).

For the practical numerical calculations a value of the angle of attack must be selected. In order to obtain higher precision, it is convenient to select a relatively high value of the angle of attack because in this way the differences between V and V_1 and ΔS and ΔS_1 are large and, therefore, can be determined with sufficient precision.

Usually, when the determination of the flow field for the case of zero angle of attack is made with a graphical numerical process, in order to avoid numerical errors of computations, the value of the intensity and direction of the velocity are plotted as a function of the position along the characteristic lines for both families of characteristic lines. The velocity distribution and the entropy-variation distribution along the characteristic lines and along the surface of the body for the case of zero angle of attack can therefore be considered known. If the distribution is not given, the values of V_1 and ΔS_1 must be determined as a function of x along each characteristic line of a given family (for example, of the second family) along the body.

Then the construction of the characteristic net for the selected angle of attack must start by drawing the first characteristic line $P_0P_2P_5$ over the design of the characteristic net for zero angle of attack (fig. 7).

From equation (34c), (34d), and (34e) the flow at P_1 can be determined. From P_1 and P_2 the point P_3 can be obtained in the first approximation as the intersection of the tangents at P_2 and P_1 to the characteristic lines. By using equations (34b), (34d), and (29), V, φ, and ΔS can be obtained in P_3 as for the case of zero angle of attack (reference 5). From the variations $\frac{dV}{dx}$, $\frac{d\varphi}{dx}$, and $\frac{d\,\Delta S}{dx}$ along the line P_1P_3 the values of V, φ, and ΔS at the point P_4 can be obtained, where P_4 is obtained from the intersection of the characteristic line P_1P_3 with a characteristic line of the second family in the net for zero angle of attack. At the point P_4, V_1, ΔS_1, and φ_1 are known; and, therefore, φ_2, V_2, ΔS_2, and w_2 can be obtained. From the values obtained from the first approximation a second approximation can be obtained. From P_4 and P_5 the point P_6 can be determined in a similar way, and the flow at P_7 can be calculated. Proceeding in a similar way, all the flow field can be analyzed.

Numerical Method

The equation of motion (13) can be transformed by means of equations (6) and (8) in a system of equations that permits a numerical determination of the quantities V_2, φ_2, and ΔS_2. This system is numerically more involved; however, the characteristic net determined for zero angle of attack is used. For a small angle of attack,

$$\frac{1}{a^2} = \frac{1}{a_1{}^2}\left[1 + \frac{\gamma - 1}{a_1{}^2}(u_1u_2 + v_1v_2)\alpha \cos \theta\right]$$

where

$$\frac{\gamma - 1}{a_1{}^2}(u_1u_2 + v_1v_2) = \frac{\gamma - 1}{a_1{}^2} V_1V_2 = \frac{\gamma - 1}{\sin^2\beta}\,\frac{V_2}{V_1} \equiv A \tag{41}$$

Therefore

$$\frac{1}{a^2} = \frac{1}{a_1{}^2}(1 + A\alpha \cos \theta)$$

Substituting equations (5) in equations (7) results in the following expression if higher-order terms are neglected:

$$\frac{\partial u_1}{\partial x}\left(1 - \frac{u_1^2}{a_1^2}\right) + \frac{\partial v_1}{\partial y}\left(1 - \frac{v_1^2}{a_1^2}\right) - \frac{u_1 v_1}{a_1^2}\left(\frac{\partial u_1}{\partial y} + \frac{\partial v_1}{\partial x}\right) + \frac{v_1}{y}$$

$$= -\alpha \cos\theta\left[\frac{v_2}{y} + \frac{w_2}{y} - \frac{\partial u_1}{\partial x}\left(\frac{2u_2u_1 + u_1^2A}{a_1^2}\right) + \frac{\partial u_2}{\partial x}\left(1 - \frac{u_1^2}{a_1^2}\right)\right.$$

$$- \frac{\partial v_1}{\partial y}\left(\frac{2v_2v_1 + v_1^2A}{a_1^2}\right) + \frac{\partial v_2}{\partial y}\left(1 - \frac{v_1^2}{a_1^2}\right)$$

$$\left. - \frac{u_1v_1A + u_1v_2 + v_1u_2}{a_1^2}\left(\frac{\partial u_1}{\partial y} + \frac{\partial v_1}{\partial x}\right) - \frac{u_1v_1}{a_1^2}\left(\frac{\partial u_2}{\partial y} + \frac{\partial v_2}{\partial x}\right)\right] \tag{42}$$

Because the left-hand side of equation (42) must be zero for the conditions at zero angle of attack,

$$\frac{\partial u_2}{\partial x}\left(1 - \frac{u_1^2}{a_1^2}\right) + \frac{\partial v_2}{\partial y}\left(1 - \frac{v_1^2}{a_1^2}\right) + \frac{v_2}{y} + \frac{w_2}{y} - \frac{u_1v_1}{a_1^2}\left(\frac{\partial u_2}{\partial y} + \frac{\partial v_2}{\partial x}\right) + Q = 0 \tag{43}$$

where

$$Q = -\frac{1}{2}\left(\frac{\partial u_1^2}{\partial x} + \frac{\partial v_1^2}{\partial x}\right)\frac{2u_2 + u_1A}{a_1^2} - \frac{1}{2}\left(\frac{\partial v_1^2}{\partial y} + \frac{\partial u_1^2}{\partial y}\right)\frac{2v_2 + v_1A}{a_1^2}$$

$$-\left(\frac{\partial v_1}{\partial x} - \frac{\partial u_1}{\partial y}\right)\frac{u_1v_2 - u_2v_1}{a_1^2} \tag{44}$$

or, from equations (10) and (36),

$$Q = -V_1 \frac{\partial V_1}{\partial x} \frac{2u_2 + u_1 A}{a_1^2} - V_1 \frac{\partial V_1}{\partial y} \frac{2v_2 + v_1 A}{a_1^2} - \frac{\varphi_2 V_1}{\gamma R} \frac{\partial S_1}{\partial n_1} \tag{45}$$

The value of all the coefficients at the points P_1 and P_2 in equation (43) can be considered known because $\frac{\partial V_1}{\partial x}$ and $\frac{\partial V_1}{\partial y}$ can be considered known from the calculations for the case of zero angle of attack. Therefore, equation (43) can be considered an equation in which the characteristic lines are equal to the characteristic lines for zero angle of attack because the coefficients of the partial derivatives $\frac{\partial u_2}{\partial x}$, $\frac{\partial u_2}{\partial y}$, $\frac{\partial v_2}{\partial x}$, and $\frac{\partial v_2}{\partial y}$ are the same in both cases. Thus,

$$\left(\frac{dy}{dx}\right) = \lambda_{1a} = \tan(\varphi_1 + \beta_1) \tag{46a}$$

$$\left(\frac{dy}{dx}\right) = \lambda_{1b} = \tan(\varphi_1 - \beta_1) \tag{46b}$$

Equation (43) can be transformed by introducing the entropy gradient $\frac{\partial S_2}{\partial n}$, and the equation of motion along each characteristic line can be obtained. From equations (8a) and (10) by means of equations (5) and (37), the following relation can be obtained:

$$\frac{\partial S}{\partial n} = \frac{\partial S_1}{\partial n} + \frac{\partial S_2}{\partial n} \alpha \cos \theta$$

$$= -\left(\frac{\partial S_1}{\partial x} + \frac{\partial S_2}{\partial x} \alpha \cos \theta\right) \frac{v_1 + v_2 \alpha \cos \theta}{V_1 + V_2 \alpha \cos \theta}$$

$$+ \left(\frac{\partial S_1}{\partial y} + \frac{\partial S_2}{\partial y} \alpha \cos \theta\right) \frac{u_1 + u_2 \alpha \cos \theta}{V_1 + V_2 \alpha \cos \theta}$$

or, for small angles of attack,

$$\frac{\partial S}{\partial n} = \frac{\partial S_1}{\partial n_1} + \frac{\partial S_2}{\partial n_1} \alpha \cos \theta + \left[- \frac{\partial S_1}{\partial x} (v_2 V_1 - v_1 V_2) \right.$$

$$\left. + \frac{dS_1}{\partial y} (u_2 V_1 - u_1 V_2) \right] \frac{\alpha \cos \theta}{V_1{}^2} \tag{47}$$

From equations (36) and (38)

$$u_2 = V_2 \cos \varphi_1 - \varphi_2 V_1 \sin \varphi_1 \tag{48a}$$

$$v_2 = V_2 \sin \varphi_1 + \varphi_2 V_1 \cos \varphi_1 \tag{48b}$$

and

$$v_1 = V_1 \sin \varphi_1$$

$$u_1 = V_1 \cos \varphi_1$$

Therefore,

$$- \frac{\partial S_1}{\partial x} (v_2 V_1 - v_1 V_2) + \frac{\partial S_1}{\partial y} (u_2 V_1 - u_1 V_2) = - \varphi_2 V_1{}^2 \left(\frac{\partial S_1}{\partial x} \frac{u_1}{V_1} + \frac{\partial S_1}{\partial y} \frac{v_1}{V_1} \right)$$

Because the term in parentheses on the right-hand side of this equation represents the variation of entropy along the streamline, which is zero, equation (47) becomes

$$\frac{\partial S}{\partial n} = \frac{\partial S_1}{\partial n_1} + \frac{\partial S_2}{\partial n_1} \alpha \cos \theta \tag{49}$$

Then, from equations (10), (41), and (49)

$$\frac{\partial v_2}{\partial x} - \frac{\partial u_2}{\partial y} = \frac{a_1{}^2}{\gamma R V_1} \frac{\partial S_2}{\partial n_1} - \left(\frac{V_2}{V_1} + A\right) \frac{a_1{}^2}{\gamma R V_1} \frac{\partial S_1}{\partial n_1} \tag{50}$$

The equations of motion along the characteristic lines defined by equations (46) can be obtained by means of transformations similar to those of equations (27) and are

$$du_2 + \lambda_{1b}\, dv_2 + D_1\, dx = 0 \tag{51}$$

$$\lambda_{1a} = \frac{dy}{dx} = \tan(\varphi_1 + \beta_1) \tag{52}$$

$$du_2 + \lambda_{1a}\, dv_2 + D_2\, dx = 0 \tag{53}$$

$$\lambda_{1b} = \frac{dy}{dx} = \tan(\varphi_1 - \beta_1) \tag{54}$$

where

$$D_1 = \left(\frac{w_2}{y} + \frac{v_2}{y} + Q\right) \frac{a_1{}^2}{a_1{}^2 - u_1{}^2}$$

$$+\left(\frac{u_1 v_1}{a_1{}^2 - u_1{}^2} + \lambda_{1a}\right) \frac{V_1}{\gamma R} \sin^2\beta_1 \left[\frac{\partial S_2}{\partial n_1} - \frac{V_2}{V_1}\left(1 + \frac{\gamma - 1}{\sin^2\beta_1}\right) \frac{\partial S_1}{\partial n_1}\right] \tag{55a}$$

$$D_2 = \left(\frac{w_2}{y} + \frac{v_2}{y} + Q\right)\frac{a_1^{\,2}}{a_1^{\,2} - u_1^{\,2}}$$

$$+\left(\frac{u_1 v_1}{a_1^{\,2} - u_1^{\,2}} + \lambda_{1b}\right)\frac{V_1}{\gamma R}\sin^2\beta_1\left[\frac{\partial S_2}{\partial n_1} - \frac{V_2}{V_1}\left(1 + \frac{\gamma - 1}{\sin^2\beta_1}\right)\frac{\partial S_1}{\partial n_1}\right] \tag{55b}$$

In equations (51) and (53) the coefficients D_1 and D_2 contain the derivatives $\frac{\partial V_1}{\partial x}$ and $\frac{\partial V_1}{\partial y}$ that must be obtained from the analysis of the case with zero angle of attack. Now, for every point P the variation of V_1 along the characteristic line of the first family for the case of zero angle of attack is

$$\left(\frac{dV_1}{dx}\right)_{\lambda_{1a}} = \frac{\partial V_1}{\partial x} + \lambda_{1a}\frac{\partial V_1}{\partial y} \tag{56a}$$

whereas along the characteristic line of the second family

$$\left(\frac{dV_1}{dx}\right)_{\lambda_{1b}} = \frac{\partial V_1}{\partial x} + \lambda_{1b}\frac{\partial V_1}{\partial y} \tag{56b}$$

At every point P given by the intersection of two characteristic lines λ_{1a} and λ_{1b} in the characteristic net, the values $\left(\frac{dV_1}{dx}\right)_{\lambda_{1a}}$ and $\left(\frac{dV_1}{dx}\right)_{\lambda_{1b}}$ are known, having been obtained from the evaluation of the following equations (reference 5):

$$\frac{dy}{dx} = \lambda_{1a} = \tan(\varphi_1 + \beta_1) \tag{57a}$$

$$\frac{1}{V_1}\left(\frac{dV_1}{dx}\right)_{\lambda_{1a}} - \tan\beta_1\left(\frac{d\varphi_1}{dx}\right) - \frac{\sin\varphi_1 \sin\beta_1 \tan\beta_1}{\cos(\varphi_1 + \beta_1)}\frac{1}{y}$$

$$+ \frac{dS_1}{dn_1}\frac{1}{\gamma R}\frac{\sin^3\beta_1}{\cos(\varphi_1 + \beta_1)} = 0 \tag{57b}$$

$$\frac{dy}{dx} = \lambda_{1b} = \tan(\varphi_1 - \beta_1) \tag{57c}$$

$$\frac{1}{V_1}\left(\frac{dV_1}{dx}\right)_{\lambda_{1b}} + \tan\beta_1\left(\frac{d\varphi_1}{dx}\right) - \frac{1}{y}\frac{\sin\varphi_1 \sin\beta_1 \tan\beta_1}{\cos(\varphi_1 - \beta_1)}$$

$$- \frac{dS_1}{dn_1}\frac{1}{\gamma R}\frac{\sin^3\beta_1}{\cos(\varphi_1 - \beta_1)} = 0 \tag{57d}$$

Therefore, the values

$$\frac{\partial V_1}{\partial x} = \frac{\lambda_{1b}}{\lambda_{1b} - \lambda_{1a}}\left(\frac{dV_1}{dx}\right)_{\lambda_{1a}} - \frac{\lambda_{1a}}{\lambda_{1b} - \lambda_{1a}}\left(\frac{dV_1}{dx}\right)_{\lambda_{1b}} \tag{58a}$$

and

$$\frac{\partial V_1}{\partial y} = \frac{1}{\lambda_{1b} - \lambda_{1a}}\left[\left(\frac{dV_1}{dx}\right)_{\lambda_{1b}} - \left(\frac{dV_1}{dx}\right)_{\lambda_{1a}}\right] \tag{58b}$$

can be calculated directly for every point of intersection of the characteristic line (equations (57a) and (57c)).

After substituting the expressions of equations (48) and (58) in equations (51) and (53) after some simplifications and trigonometric transformations, the following equations can be obtained:

$$\lambda_{1a} = \frac{dy}{dx} = \tan(\varphi_1 + \beta_1) \tag{59a}$$

$$\frac{dV_2}{V_1} - d\varphi_2 \tan \beta_1 + \frac{A_1 P_1}{\gamma R} dx - \frac{A_1}{y}\left(\frac{V_2}{V_1} \sin \varphi_1 + \varphi_2 \cos \varphi_1 + \frac{w_2}{V_1}\right) dx$$

$$+ \frac{T\ dx}{\sin \beta_1 \cos^2\beta_1 \cos(\beta_1 + \varphi_1)} = 0 \tag{59b}$$

$$\lambda_{1b} = \frac{dy}{dx} = \tan(\varphi_1 - \beta_1) \tag{59c}$$

$$\frac{dV_2}{V_1} + d\varphi_2 \tan \beta_1 - \frac{A_2 P_2}{\gamma R} dx - \frac{A_2}{y}\left(\frac{V_2}{V_1} \sin \varphi_1 + \varphi_2 \cos \varphi_1 + \frac{w_2}{V_1}\right) dx$$

$$+ \frac{T\ dx}{\sin \beta_1 \cos^2\beta_1 \cos(\varphi_1 - \beta_1)} = 0 \tag{59d}$$

where

$$A_1 = \frac{\tan \beta_1 \sin \beta_1}{\cos(\varphi_1 + \beta_1)} \tag{60a}$$

$$A_2 = \frac{\tan \beta_1 \sin \beta_1}{\cos(\varphi_1 - \beta_1)} \tag{60b}$$

$$P_1 = \frac{\partial S_2}{\partial n_1} \cos \beta_1 \sin \beta_1 - \left[\frac{V_2}{V_1}\left(1 + \frac{\gamma - 1}{\sin^2\beta_1}\right)\cos \beta_1 \sin \beta_1 - \varphi_2\right]\frac{\partial S_1}{\partial n_1} \tag{60c}$$

$$P_2 = \frac{\partial S_2}{\partial n_1} \cos \beta_1 \sin \beta_1 - \left[\frac{V_2}{V_1}\left(1 + \frac{\gamma - 1}{\sin^2\beta_1}\right)\cos \beta_1 \sin \beta_1 + \varphi_2\right]\frac{\partial S_1}{\partial n_1} \tag{60d}$$

$$T = \left(\frac{dV_1}{dx}\right)_{\lambda_{1a}} \frac{1}{V_1} \cos(\beta_1 + \varphi_1)\left[\frac{V_2}{V_1}\left(1 + \frac{\gamma - 1}{2 \sin^2\beta_1}\right)\sin \beta_1 + \varphi_2 \cos \beta_1\right]$$

$$-\left(\frac{dV_1}{dx}\right)_{\lambda_{1b}} \frac{\cos(\varphi_1 - \beta_1)}{V_1}\left[\frac{V_2}{V_1}\left(1 + \frac{\gamma - 1}{2 \sin^2\beta_1}\right)\sin \beta_1 - \varphi_2 \cos \beta_1\right] \quad (60e)$$

The coefficients A_1 and A_2 and the value of $\frac{dS_1}{dn_1}$ have been determined for the flow at zero angle of attack and

$$\frac{dS_2}{dn_1} = \frac{S_{2_{P_2}} - S_{2_{P_1}}}{\left(x_{P_3} - x_{P_2}\right)\left[\frac{\sin \beta_1}{\cos(\varphi_1 - \beta_1)}\right]_{P_2} + \left(x_{P_3} - x_{P_1}\right)\left[\frac{\sin \beta_1}{\cos(\varphi_1 + \beta_1)}\right]_{P_1}}$$

$$= \frac{dS_1}{dn_1} \frac{S_{2_{P_2}} - S_{2_{P_1}}}{S_{1_{P_2}} - S_{1_{P_1}}} \quad (61)$$

The practical use of equations (59) is identical to the use of the corresponding equations (57) for the case of zero angle of attack. (See reference 4.)

CONCLUDING REMARKS

The method of characteristics has been applied to bodies of revolution at a small angle of attack. Only the first-order effects of the angle of attack have been considered. The system developed takes into account the effects of the entropy variations on the flow phenomena and determines a flow that exactly satisfies the boundary conditions within the limits of the simplifications assumed.

The application of the method to practical problems has been discussed and two systems are given. The first method is numerical and analytical and requires less numerical computation but requires the

construction of another characteristic net, whereas the second method is only numerical and uses the characteristic net and some of the numerical computations made for the calculations for zero angle of attack.

Langley Aeronautical Laboratory
National Advisory Committee for Aeronautics
Langley Air Force Base, Va., November 22, 1948

APPENDIX

DETERMINATION OF FLOW PROPERTIES AROUND A CIRCULAR CONE AT A SMALL ANGLE OF ATTACK

Assume a polar coordinate system r,ψ,θ. Call v_r the velocity in radial direction, v_n the velocity in normal direction to r in the meridian plane θ = Constant, and w the component normal to the meridian plane (fig. 8); that is,

$$v_r = \frac{dr}{dt}$$

$$v_n = \frac{r\ d\psi}{dt}$$

$$w = \frac{r\ d\theta\ \sin\psi}{dt}$$

If the phenomenon is conical,

$$\frac{\partial v_r}{\partial r} = 0$$

$$\frac{\partial v_n}{\partial r} = 0$$

$$\frac{\partial w}{\partial r} = 0$$

and

$$\frac{\partial p}{\partial r} = 0$$

$$\frac{\partial \rho}{\partial r} = 0$$

Therefore, Euler's equations are

$$\frac{v_n}{r}\frac{\partial v_r}{\partial \psi} + \frac{w}{r\ \sin\psi}\frac{\partial v_r}{\partial \theta} - \frac{v_n^2 + w^2}{r} = 0 \tag{62a}$$

$$\frac{v_n}{r}\frac{\partial v_t}{\partial \psi} + \frac{w}{r\ \sin\psi}\frac{\partial v_n}{\partial \theta} + \frac{1}{\rho r}\frac{\partial p}{\partial \psi} + \frac{v_r v_n - w^2 \cot\psi}{r} = 0 \tag{62b}$$

$$\frac{v_n}{r}\frac{\partial w}{\partial \psi} + \frac{w}{r \sin \psi}\frac{\partial w}{\partial \theta} + \frac{1}{r\rho \sin \psi}\frac{\partial p}{\partial \theta} + \frac{v_r w + v_n w \cot \psi}{r} = 0 \tag{62c}$$

The continuity equation is

$$2\rho v_r \sin \psi + v_n \sin \psi \frac{\partial \rho}{\partial \psi} + \rho \sin \psi \frac{\partial v_n}{\partial \psi} + v_n \rho \cos \psi + w \frac{\partial \rho}{\partial \theta} + \frac{\partial w}{\partial \theta} = 0 \tag{63}$$

and the energy equation is

$$\frac{\gamma}{\gamma - 1}\left(\frac{1}{\rho}\frac{\partial p}{\partial \theta} - \frac{p}{\rho^2}\frac{\partial \rho}{\partial \theta}\right) = -\left(v_r \frac{\partial v_r}{\partial \theta} + v_n \frac{\partial v_n}{\partial \theta} + w \frac{\partial w}{\partial \theta}\right) \tag{64a}$$

$$\frac{\gamma}{\gamma - 1}\left(\frac{1}{\rho}\frac{\partial p}{\partial \psi} - \frac{p}{\rho^2}\frac{\partial \rho}{\partial \psi}\right) = -\left(v_r \frac{\partial v_r}{\partial \psi} + v_n \frac{\partial v_n}{\partial \psi} + w \frac{\partial w}{\partial \psi}\right) \tag{64b}$$

Combining equations (62) to (64) results in

$$v_r\left(2 - \frac{v_n^2 + w^2}{a^2}\right) + v_n\left(1 + \frac{w^2}{a^2}\right)\cot \psi + \frac{\partial v_n}{\partial \psi}\left(1 - \frac{v_n^2}{a^2}\right) + \frac{\partial w}{\sin \psi\, \partial \theta}\left(1 - \frac{w^2}{a^2}\right)$$

$$- \frac{2wv_n}{a^2}\frac{\partial v_n}{\sin \psi\, \partial \theta} + \frac{wv_n}{a^2}\left(\frac{\partial v_n}{\sin \psi\, \partial \theta} - \frac{\partial w}{\partial \psi} - w \cot \psi\right) = 0 \tag{65}$$

For small angles of attack the velocity components can be expressed in the form (references 1 and 3)

$$\left.\begin{aligned} v_r &= v_{r_1} + \alpha v_{r_2} \cos \theta \\ v_n &= v_{n_1} + \alpha v_{n_2} \cos \theta \\ w &= \alpha w_2 \sin \theta \end{aligned}\right\} \tag{66}$$

when the second and higher order terms of the angle of attack have been neglected. Equation (65) at small angles of attack becomes

$$v_r\left(2 + \frac{v_n^2}{a^2}\right) + v_n \cot \psi + \frac{\partial v_n}{\partial \psi}\left(1 - \frac{v_n^2}{a^2}\right) + \frac{\partial w}{\sin \psi \ \partial \theta} = 0 \qquad (67)$$

At small angles of attack,

$$p = p_1 + \alpha p_2 \cos \theta$$

$$\rho = \rho_1 + \alpha \rho_2 \cos \theta$$

The shock is a circular conical shock having its axis inclined at an angle η with the axis of the cone. The quantities with subscript 1 are the quantities corresponding to the case of zero angle of attack. (Indeed, the cone is a particular body of revolution; and, therefore, the considerations made for the case of bodies of revolution are still valid.)

From equations (62a), (62b), and (64b), there results at small angles of attack

$$\frac{1}{p}\frac{\partial p}{\partial \psi} - \frac{\gamma}{\rho}\frac{\partial \rho}{\partial \psi} = 0$$

In the meridian plane θ = Constant, therefore, the transformation behind the shock is isentropic for small angles of attack. If $\alpha \Delta S_2 \cos \theta$ is the variation of entropy in a direction normal to the meridian plane θ = Constant,

$$\frac{\partial S}{r \sin \psi \ \partial \theta} = \alpha \Delta S_2 \cos \theta$$

Because the shock at small angles of attack has circular cross section,

$$\frac{\gamma - 1}{R} \Delta S_2 = \left(\frac{p_2}{p_1} - \gamma \frac{\rho_2}{\rho_1}\right) = \text{Constant}$$

and from equations (62c) and (64a)

$$-\frac{a^2}{\gamma R}\Delta S_2 = v_n \frac{\partial w_2}{\partial \psi} \sin \psi + w_2 \left(v_r \sin \psi + v_n \cos \psi\right) + v_r v_{r_2} + v_n v_{n_2} \tag{68}$$

If the variation of entropy is small and the term ΔS_2 can be neglected, equation (68) becomes

$$w_2 \sin \psi = -v_{r_2} \tag{69}$$

Equation (67) can be written in the following form:

$$\left(v_r + \frac{\partial v_n}{\partial \psi}\right)\left(1 - \frac{v_n^2}{a^2}\right) = -v_r - v_n \cot \psi - \frac{\alpha w_2 \cos \theta}{\sin \psi} \tag{70}$$

By use of equation (67) and by considering the conditions for zero angle of attack, equation (70) becomes:

$$\left(v_{r_2} + \frac{\partial v_{n_2}}{\partial \psi}\right)\left(1 - \frac{v_{n_1}^2}{a_1^2}\right)$$

$$\doteq -v_{n_2}\left[\cot \psi + \left(\frac{2v_{n_1}}{a_1^2} + \frac{\gamma - 1}{a_1^4} v_{n_1}^3\right)\frac{v_{r_1} + v_{n_1} \cot \psi}{1 - \frac{v_{n_1}^2}{a_1^2}}\right]$$

$$-v_{r_2}\left(1 + \frac{\gamma - 1}{a_1^4}\frac{v_{r_1} + v_{n_1} \cot \psi}{1 - \frac{v_{n_1}^2}{a_1^2}} v_{r_1} v_{n_1}^2\right) - \frac{w_2}{\sin \psi} \tag{71}$$

Equations (68), (70), and (71) permit the determination of the flow around the cone at an angle of attack by means of a step-by-step calculation when the calculation for $\alpha = 0$ has been performed. Consider the hodograph plane uv, and consider the variation of velocity components v_r and v_n in a meridian plane θ = Constant (fig. 9). Assume that for a given value of ψ_a and θ_a the velocity components v_r, v_n, and w are known. Point P_a of the hodograph diagram represents the velocity vector OP_a corresponding to the velocity at every point of the space of coordinate ψ_a in the plane θ_a = Constant; whereas OQ_a represents the values of $\left(v_n\right)_{P_a}$ and Q_aP_a represents the values of $\left(v_r\right)_{P_a}$. Now, the radius of curvature R_a of the hodograph diagram is along the line Q_aP_a and has a value given by (reference 1)

$$R_a = \left(v_r + \frac{\partial v_n}{\partial \psi}\right)_{P_a}$$

and, therefore, can be determined from equation (70). At P_o the values of v_{r_1} and v_{n_1} are known from the calculation for $\alpha = 0$; therefore, αv_{r_2} and αv_{n_2} can be determined from equations (66). Equation (71) can be used in place of equation (70) in the following way: The vectors OQ_a and Q_aP_a represent the values of v_{n_2} and v_{r_2} at P_a; the vector OP_a in the hodograph diagram gives the values of V_2; and, therefore,

$$R_{2_a} = \left(v_{r_2} + \frac{\partial v_{n_2}}{\partial \psi}\right)_{P_a}$$

can be obtained from equation (71).

Now at any point P_a the radius R_a, given from equation (70), or the radius R_{2_a}, given from equation (71), is known; therefore, from the quantities at P_a the quantities at P_b of coordinate $\psi_b = \psi_a + \Delta\psi$ can be obtained by constructing a circle of center C_a $\left(\text{where } C_aP_a = R_a \text{ or } R_{2_a}\right)$ through the point P_a until the point P_b along the line C,

which is a straight line from C_a, is inclined by $\psi_a + \Delta\psi$ with the u-axis. Therefore,

$$(v_n)_{\psi+\Delta\psi} = (v_n)_\psi \cos \Delta\eta + (R - v_r)_\psi \sin \Delta\eta$$

$$(v_r)_{\psi+\Delta\psi} = (v_n)_\psi \sin \Delta\eta - (R - v_r)_\psi \cos \Delta\eta + R_\psi$$

Inasmuch as the values of v_r and v_n at P_b have been obtained, the values of v_{r_2} and v_{n_2} can be determined by differences from the values for $\alpha = 0$ with the use of equations (66). (If equation (71) is used, the values of v_{r_2} and v_{n_2} are obtained directly.) With equation (68) the value of $\frac{\partial w_2}{\partial \psi}$ can be calculated at P_a, and the value of w_2 at P_b can be obtained. Indeed, ΔS_2 is constant and has been determined from the conditions at the shock. In a similar way, all the hodograph diagram can be constructed. If necessary, for every point P_b a second approximation can be determined.

The calculation of all the flow field must start at the shock. For the calculations it is convenient to choose a coordinate system having the axis of the conical shock as the axis of polar coordinates. In this case, the velocity components v_r, v_n, and w behind the shock can still be expressed in the form of equation (66). Indeed, from equations (15) and (19),

$$v_{n_s} = \left[v_{n_1} + \alpha \cos \theta \left(v_{n_2} + \frac{\eta}{\alpha} \frac{\partial v_{n_1}}{\partial \psi}\right)\right]_b$$

$$= v_{n_{1_s}} + \alpha v_{n_{2_s}} \cos \theta \tag{72a}$$

$$v_{r_s} = \left[v_{r_1} + \alpha \cos \theta \left(v_{r_2} + \frac{\eta}{\alpha} v_{n_1}\right)\right]_b$$

$$= v_{r_{1_s}} + \alpha v_{r_{2_s}} \cos \theta \tag{72b}$$

$$w_s = \alpha \sin \theta \left(w_2 - \frac{1}{\sin \psi} \frac{\eta}{\alpha} v_{n_1} \right)_b$$

$$= \alpha w_{2_s} \sin \theta \tag{72c}$$

where v_{n_s}, v_{r_s}, and w_s are the components referred to the axis of the conical shock, whereas the components v_{r_b}, v_{n_b}, and w_b are referred to the axis of the body. Indeed, η/α is constant.

The calculations start at the shock. After determining the flow field for zero angle of attack, the angle of the conical shock ψ_s is known and the velocity components v_{n_1} and v_{r_1} with respect to the axis of the shock for every value of ψ are also known. In order to determine the flow for the case of a small angle of attack, the direction of the undisturbed velocity must be rotated at a small angle $\alpha - \eta$ with respect to the axis of the shock (fig. 10). The value assumed for $\alpha - \eta$ fixes the value of α for which the calculations are performed. (This value of α is not yet known but is obtained as a result of the calculation.)

For the value of $\alpha - \eta$ chosen, the components v_{r_s} and w_s behind the shock can be determined from equation (14b) $\left(v_{r_s} = v_T'\right)$ and equation (14c) $(w' = w_s)$; whereas v_{n_s} can be determined from equation (21a) $\left(v_{n_s} = -v_N''\right)$ and v_N' is given by equation (14a). The value of entropy $\alpha \Delta S_2 \cos \theta$ can also be determined from the equation of the shock, for example, from the difference between ΔS and ΔS_1. When v_{r_s}, v_{n_s}, w_{2_s}, and ΔS_2 are known behind the shock, all the flow field can be obtained by means of equations (68) and (70) or (71). The hodograph diagram can be constructed, for example, in the plane $\theta = \frac{\pi}{2}$.

The axis u has been chosen in the direction of the undisturbed velocity for zero angle of attack that corresponds to the axis of the shock for $\alpha = 0$. For α the undisturbed velocity has been rotated at $\alpha - \eta$ with respect to the u-axis (fig. 10); therefore, the axis of the shock has not been changed. The velocity OP_a behind the shock of figure 9 must be decomposed (1) in a component P_aQ_a inclined at ψ_s corresponding to v_{r_s} if equation (70) is used or to $v_{r_{2_s}}$ if equation (71) is used and (2) in a component O_aQ_a corresponding to v_{n_s} or $v_{n_{2_s}}$.

In this way, the values of v_{r_1} and v_{n_1} that must be used in equations (68), (70), and (71) are the values obtained from the calculations for zero angle of attack at the same value of ψ (that is, $\psi = \psi_s$ for P_a). Because the calculations start at the shock, the construction of the hodograph diagram must be performed in the direction of decreasing values of ψ. At the surface of the body for $\theta = \frac{\pi}{2}$, the component v_n must be zero; therefore, when the radius of the hodograph diagram passes at the origin of coordinates u and v, the corresponding value of ψ is equal to $\psi_o + \eta$ where ψ_o is the angle of the cone (fig. 10). Because ψ_o is known, the value of η and, therefore, of α can be determined.

The components v_r and v_n in the plane $\theta = 0$ or $\theta = \frac{\pi}{2}$ do not change when, for the axis of reference, the axis of the body is assumed; but the corresponding value of ψ is increased at η (fig. 10). The value of w_2 changes; the value of w_{2_b}'' can be determined from the value of w_2 by means of equation (72c).

For practical calculations it is convenient to use nondimensional coefficients obtained by dividing all the velocity components by the limiting velocity V_l. The expression a/V_l can be obtained from equation (39d).

For small values of α, the values of v_{r_2}, v_{n_2}, w_2, and η/α are independent of α; and, therefore, the flow for every other value of α can be obtained from this determination. The calculations can be graphical or analytical.

REFERENCES

1. Ferrari, C.: Determination of the Pressure Exerted on Solid Bodies of Revolution with Pointed Noses Placed Obliquely in a Stream of Compressible Fluid at Supersonic Velocity. R.T.P. Translation No. 1105, British Ministry of Aircraft Production. (From Atti R. Accad. Sci. Torino, vol. 72, Nov.-Dec. 1936, pp. 140-163.)

2. Sauer, Robert: Supersonic Flow about Projectile Heads of Arbitrary Shape at Small Incidence. R.T.P. Translation No. 1573, British Ministry of Aircraft Production. (From Luftfahrtforschung, vol. 19, no. 4, May 1942, pp. 148-152.)

3. Staff of the Computing Section, Center of Analysis (Under Direction of Zdeněk Kopal): Tables of Supersonic Flow around Yawing Cones. Tech. Rep. No. 3, M.I.T., 1947.

4. Stone, A. H.: On Supersonic Flow Past a Slightly Yawing Cone. Jour. Math. and Phys., vol. XXVII, no. 1, April 1948, pp. 67-81.

5. Ferri, Antonio: Application of the Method of Characteristics to Supersonic Rotational Flow. NACA Rep. No. 841, 1946.

6. Staff of the Computing Section, Center of Analysis (Under Direction of Zdeněk Kopal): Tables of Supersonic Flow around Cones. Tech. Rep. No. 1, M.I.T., 1947.

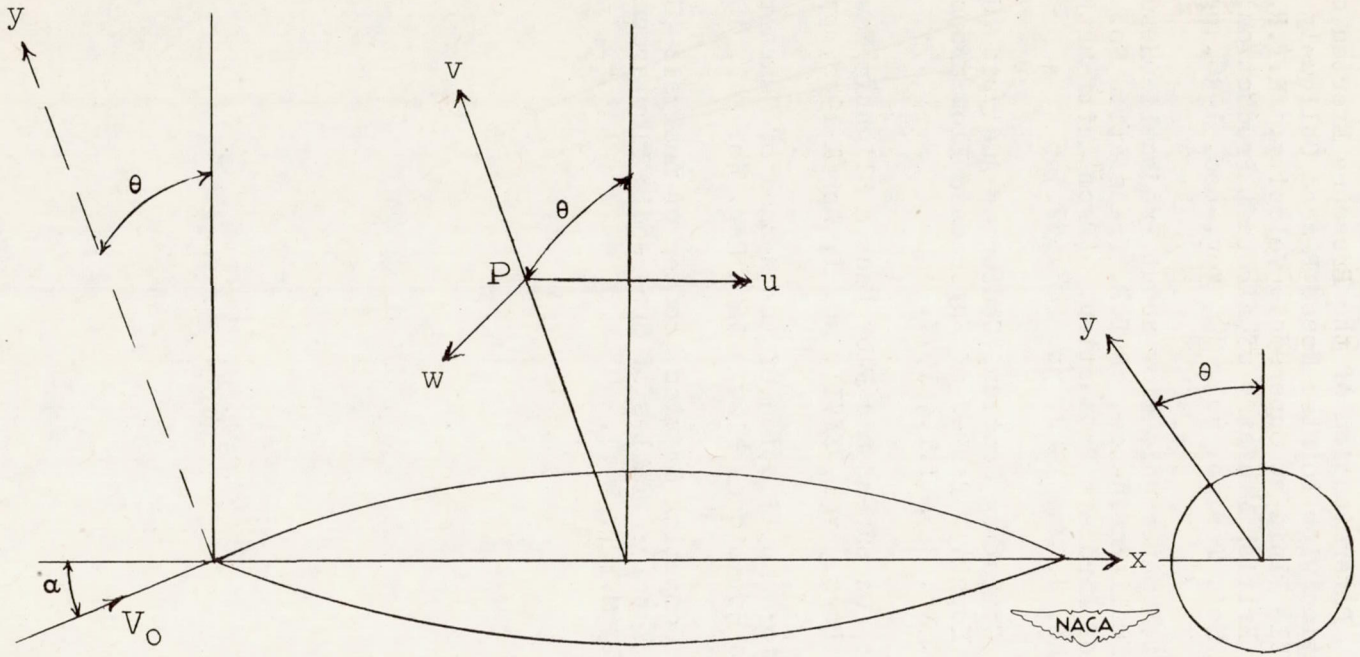

Figure 1.– Cylindrical coordinates and corresponding velocity components.

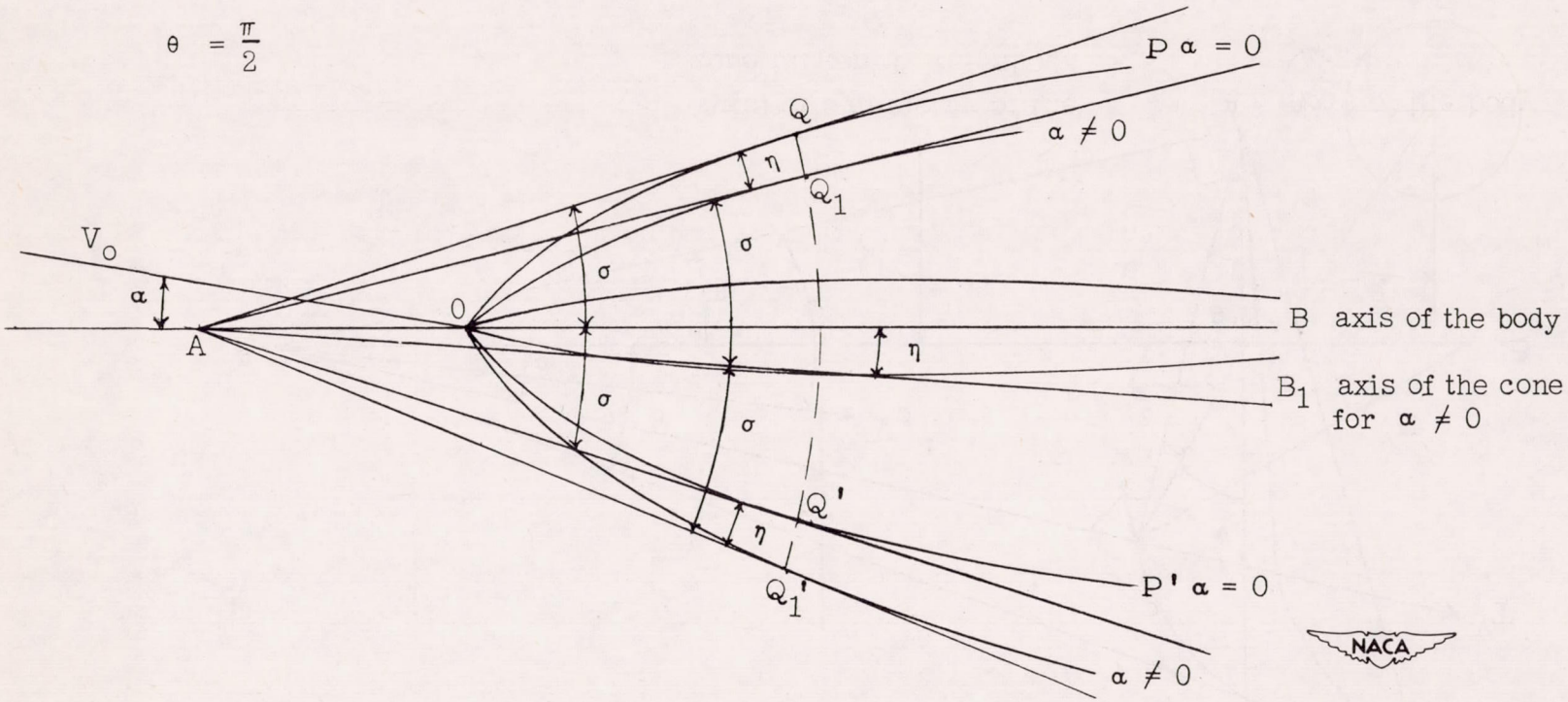

Figure 2.– The shock surface at $\alpha = 0$ and $\alpha \neq 0$.

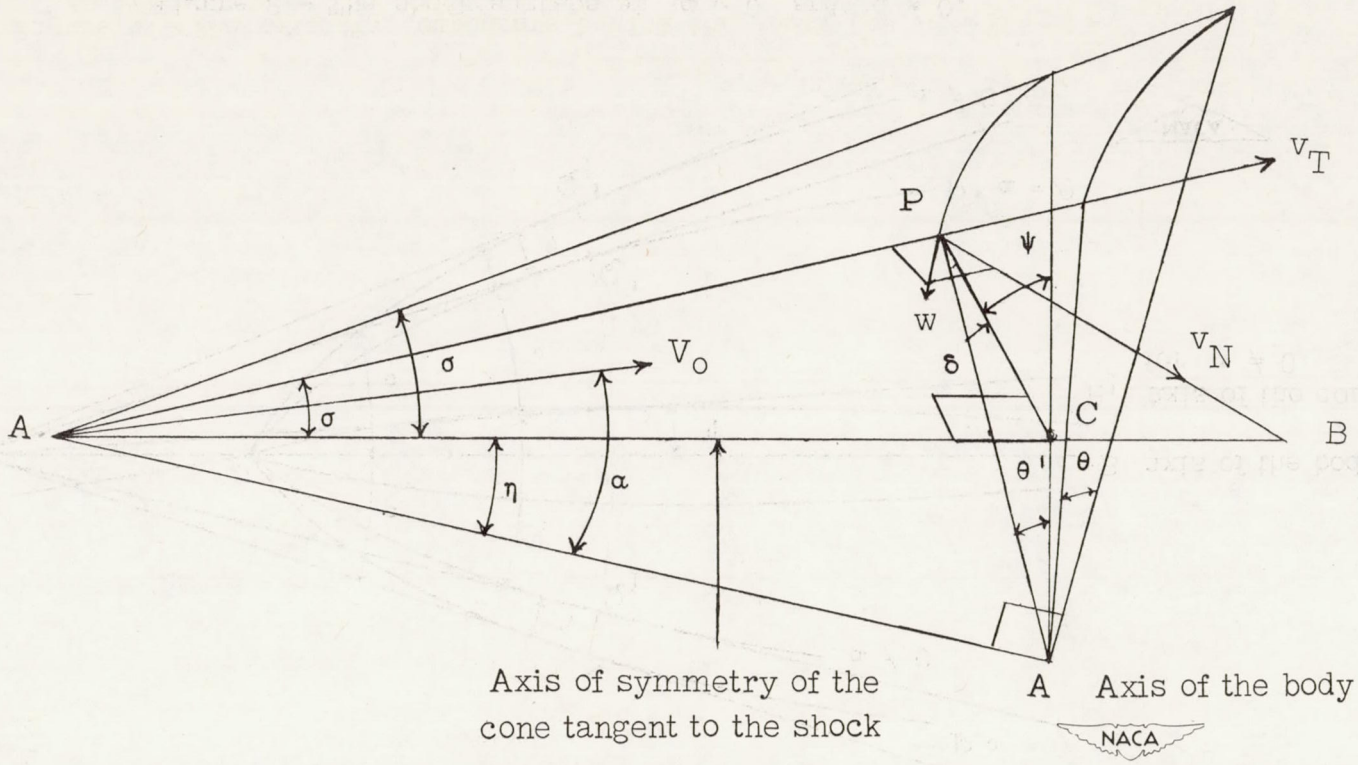

Figure 3.– The velocity components in front of and behind the shock.

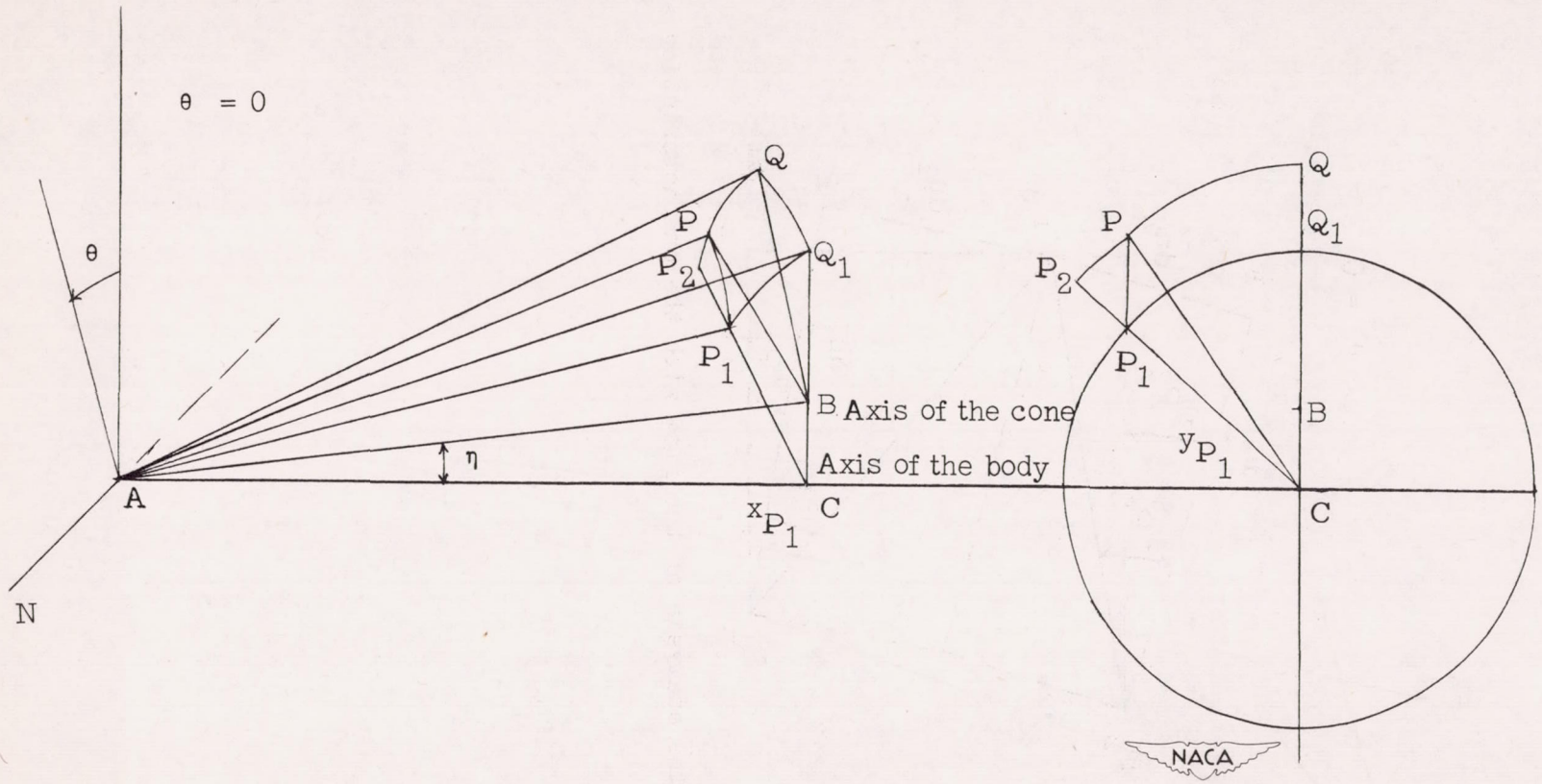

Figure 4.– The velocity components behind the shock for $\alpha \neq 0$ as a function of the velocity components behind the shock for $\alpha = 0$.

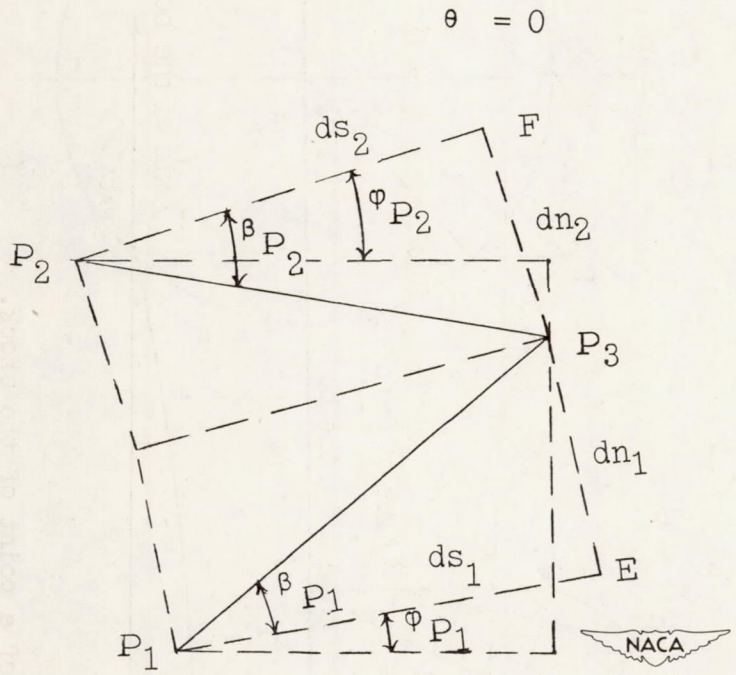

Figure 5.– The analysis of the flow with the characteristics system.

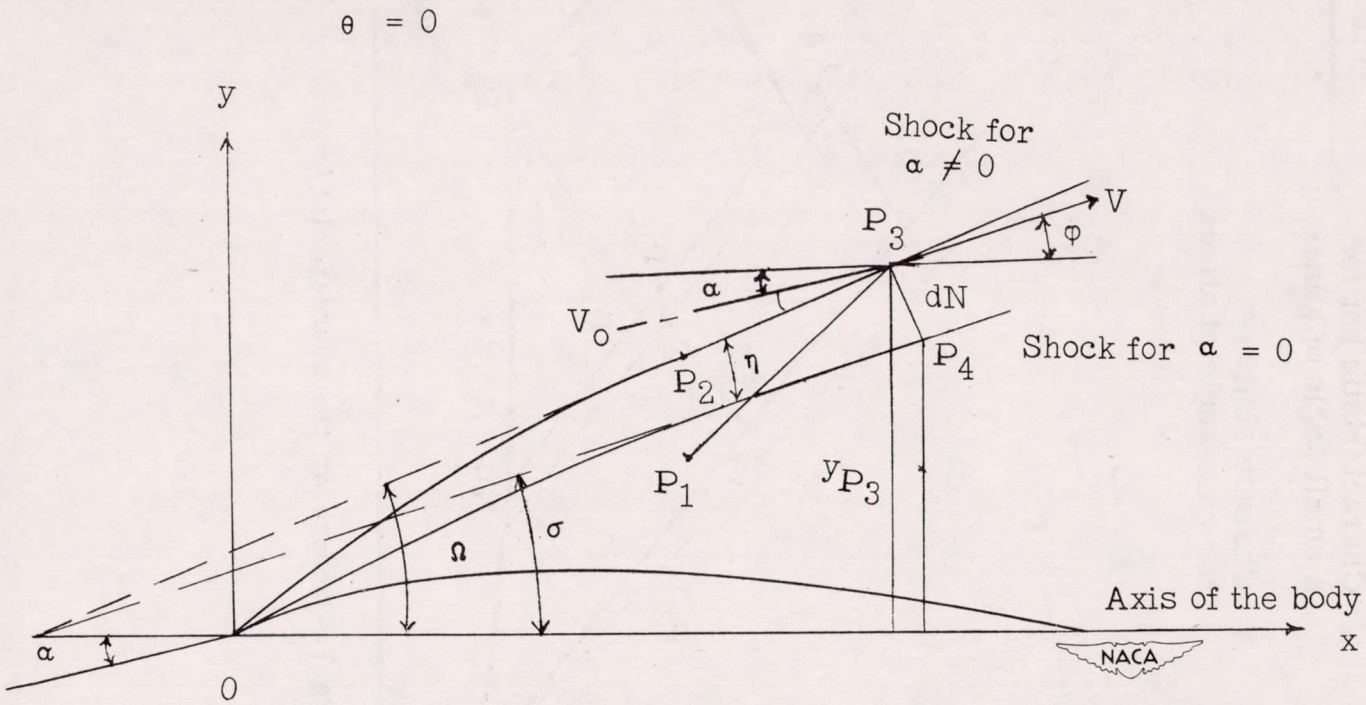

Figure 6.– Determination of a point of the shock.

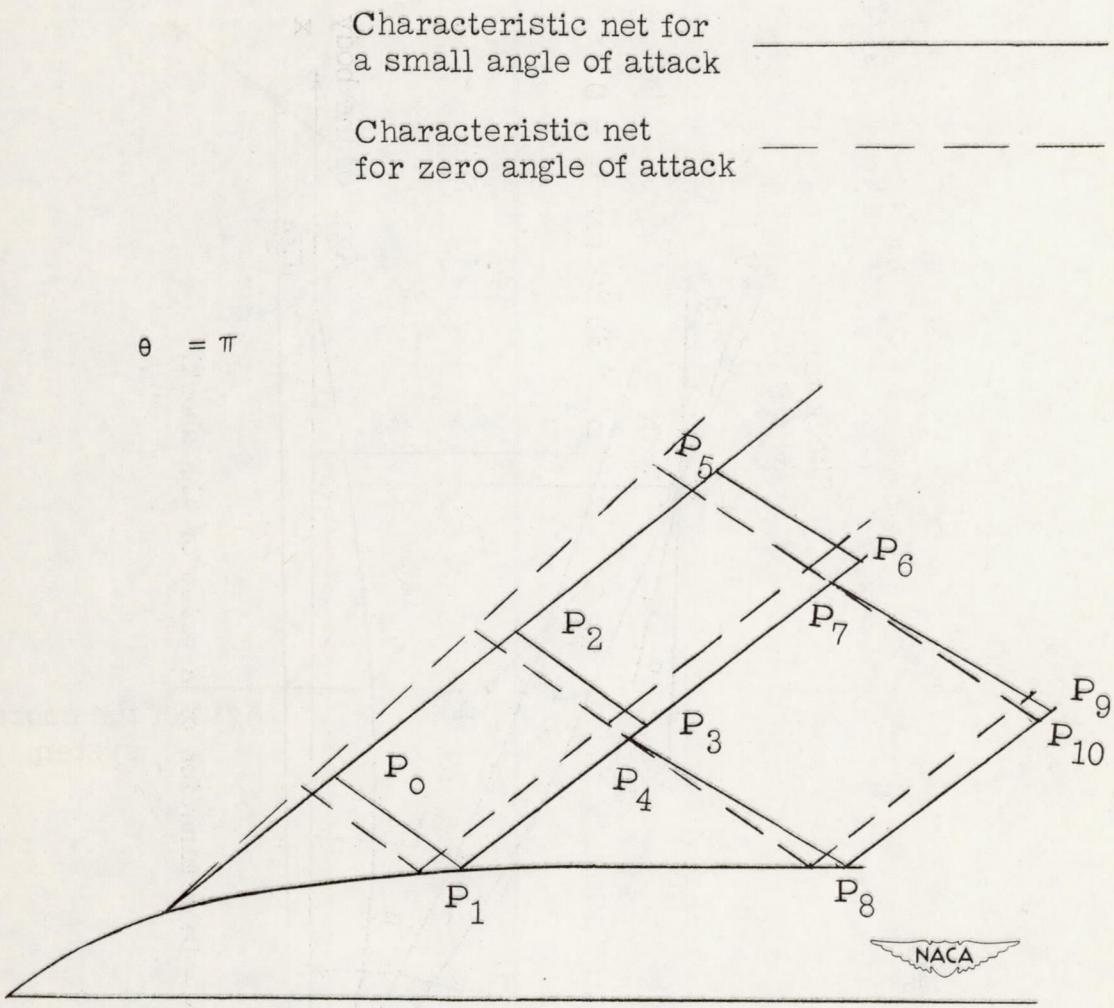

Figure 7.– Scheme of the characteristic net.

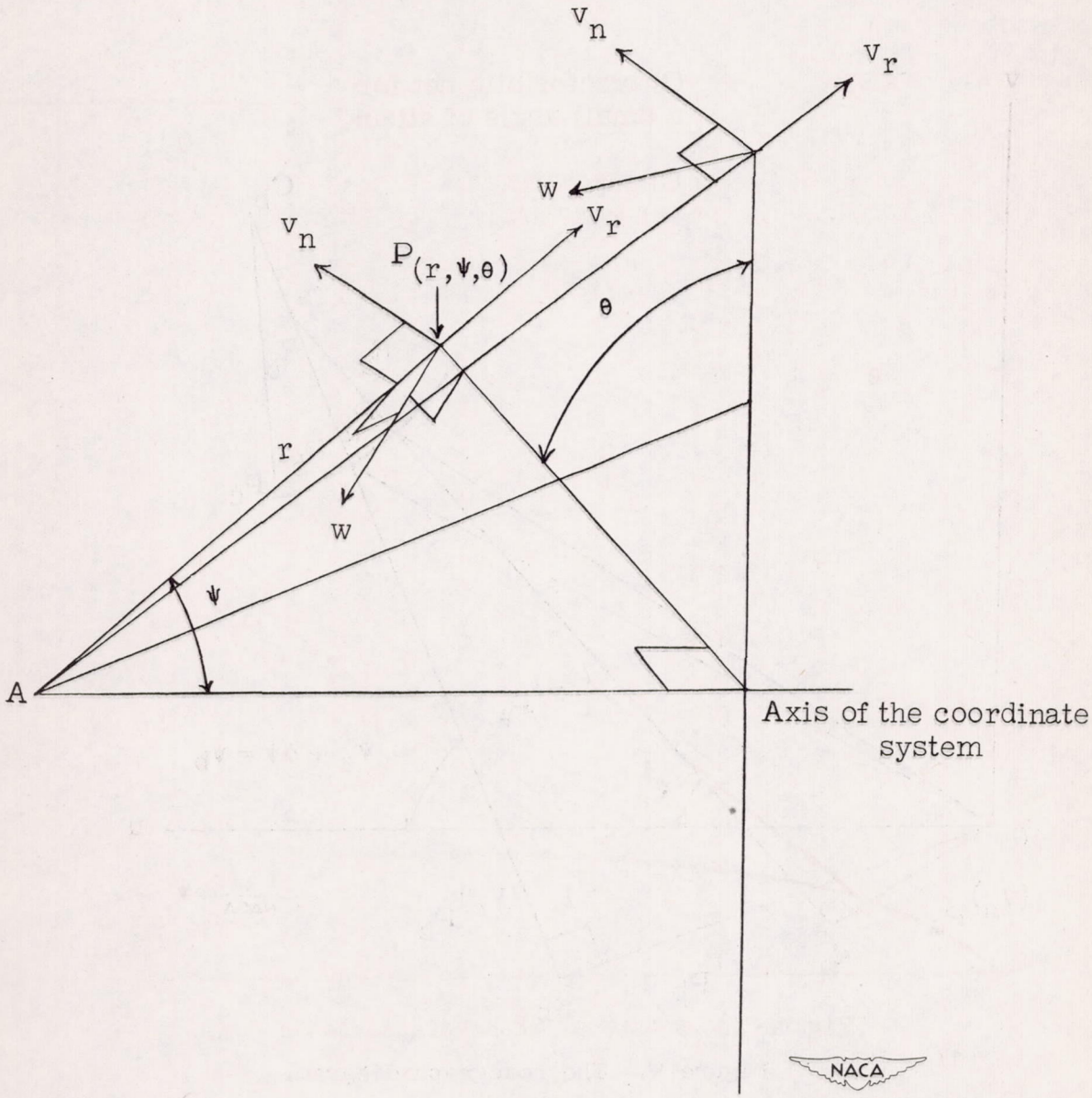

Figure 8.– Polar coordinates and velocity components.

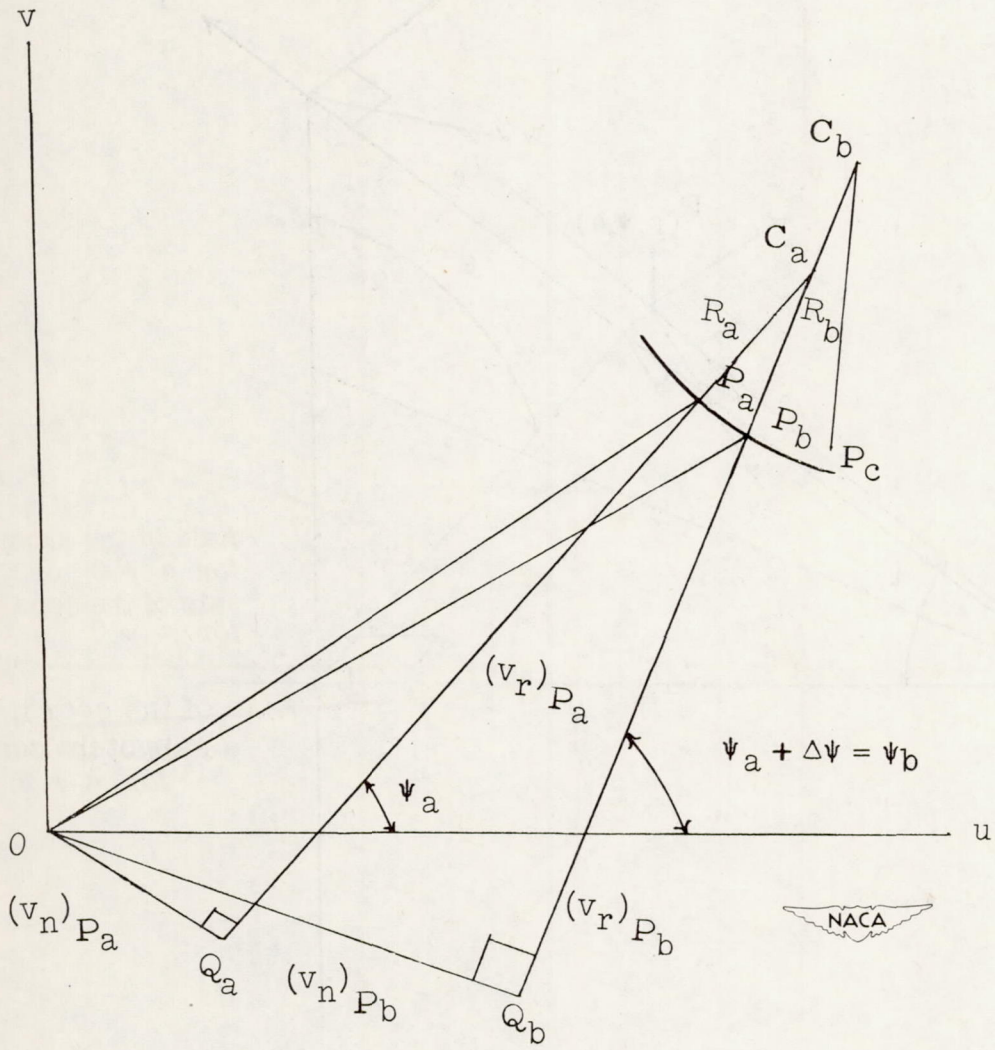

Figure 9.– The hodograph diagram.

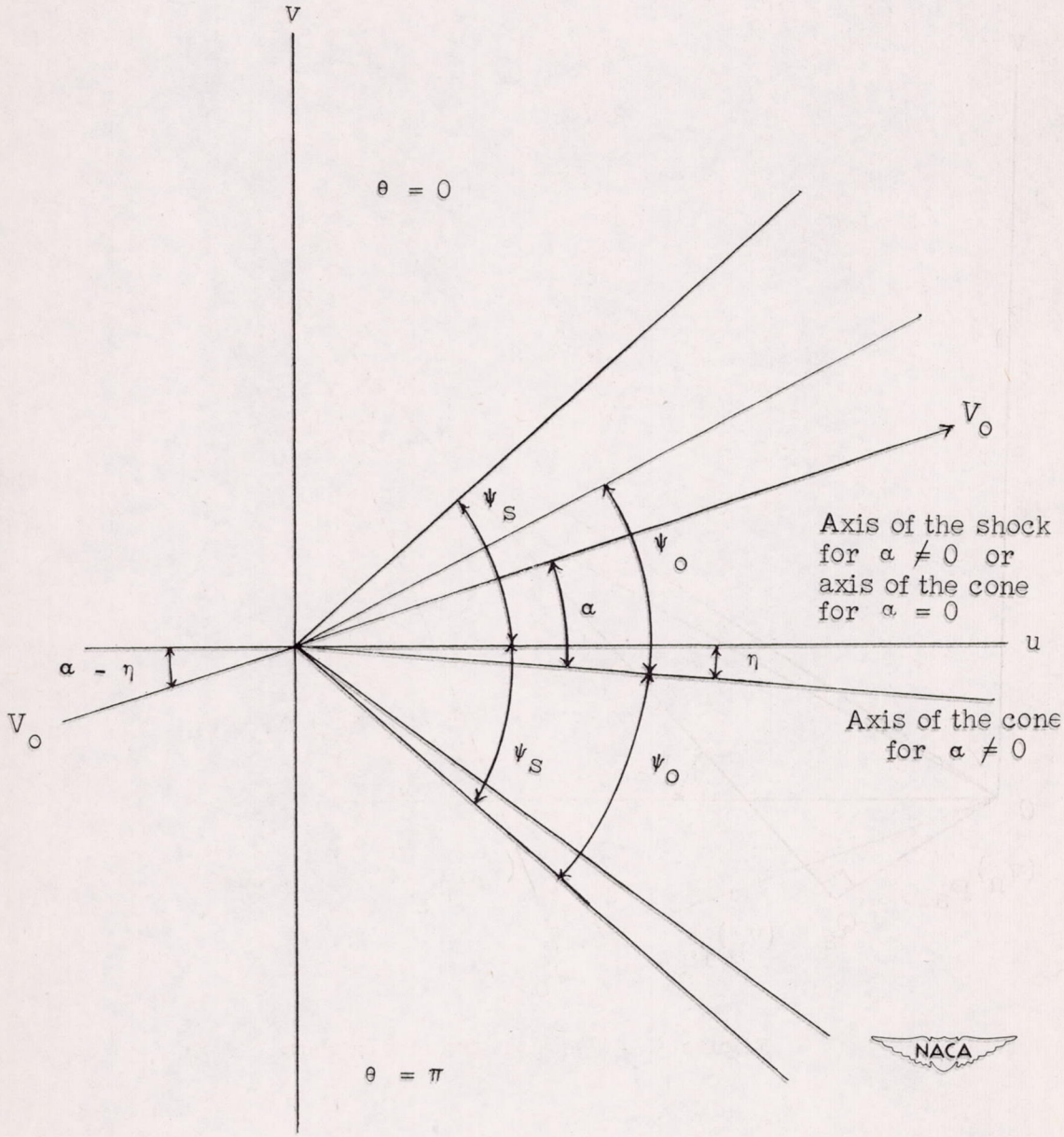

Figure 10.– Choice of the axis for the hodograph diagram.