NACA TN 2889

PROPERTY FAIRCHILD ENGINEERING LIBRARY
APR 17 1953

NATIONAL ADVISORY COMMITTEE FOR AERONAUTICS

TECHNICAL NOTE 2889

ESTIMATION OF HYDRODYNAMIC IMPACT LOADS AND PRESSURE DISTRIBUTIONS ON BODIES APPROXIMATING ELLIPTICAL CYLINDERS WITH SPECIAL REFERENCE TO WATER LANDINGS OF HELICOPTERS

By Emanuel Schnitzer and Melvin E. Hathaway

Langley Aeronautical Laboratory
Langley Field, Va.

CASE FILE COPY

Washington
April 1953

B

NATIONAL ADVISORY COMMITTEE FOR AERONAUTICS

TECHNICAL NOTE 2889

ESTIMATION OF HYDRODYNAMIC IMPACT LOADS AND PRESSURE DISTRIBUTIONS ON BODIES APPROXIMATING ELLIPTICAL CYLINDERS WITH SPECIAL REFERENCE TO WATER LANDINGS OF HELICOPTERS

By Emanuel Schnitzer and Melvin E. Hathaway

SUMMARY

An approximate method for computing water loads and pressure distributions on lightly loaded elliptical cylinders during oblique water impacts is presented. The method is of special interest for the case of emergency water landings of helicopters. This method makes use of theory developed and checked for landing impacts of seaplanes having bottom cross sections of V and scalloped contours.

An illustrative example is given to show typical results obtained from the use of the proposed method of computation. The accuracy of the approximate method was evaluated through comparison with limited experimental data for two-dimensional drops of a rigid circular cylinder at a trim of 0° and a flight-path angle of 90°. The applicability of the proposed formulas to the design of rigid hulls is indicated by the rough agreement obtained between the computed and experimental results. A detailed computational procedure is included as an appendix.

INTRODUCTION

The ditching of helicopters has recently become of interest because of the increased number of helicopters in service over water and because of the number of ditchings which have occurred. For instance, out of 97 helicopters of a particular model purchased by one agency, 13 have been ditched.

Ditching of aircraft poses certain questions among which are these: Can the fuselage or hull be designed to withstand the hydrodynamic impact loads without adding excessive structural weight? If not, how can ditchings best be made in order to save the passengers and crew, regardless of the location or extent of the fuselage damage?

With regard to fixed-wing land-based aircraft, the answer to the first question has been in the negative, since the large loads resulting from high forward landing speeds would require a very strong, and hence heavy, structure. The operator of this type of aircraft, therefore, is concerned primarily with other phases of the ditching problem. For the helicopter, however, the impact loads are normally much less than for fixed-wing aircraft because of the lower forward landing speed of helicopters. It appears that it might be practicable to design the helicopter fuselage to withstand ditching loads. In any event, it is felt that a method for quickly estimating ditching loads on helicopter fuselage bottoms would be a useful tool for the designer.

The present paper touches only on the applied-load phase of the general problem and specifically presents a method for quickly estimating water loads and pressure distributions on helicopter or airplane fuselages where the cross-sectional shape of the fuselage may be approximated by an ellipse. The proposed method involves a simplification of the general treatment of reference 1 for water loads on bodies of arbitrary cross section. The pressure equations are obtained from reference 2 for impacts of V-bottom floats and are applied in this paper to give a first approximation of the pressures on an elliptical bottom.

The derivation of the approximate method is followed by an example of its application to a hypothetical helicopter ditching and then comparisons of theoretical computation with limited test data are presented and discussed. As a computational aid the steps in applying the method for computing bottom loads and pressure distributions for water landings are given as an appendix.

SYMBOLS

(Any consistent system of units may be used.)

A hydrodynamic aspect ratio, approximated by expression $\frac{h/a}{\tan \tau}$

A_{av} average hydrodynamic aspect ratio, l/a

a length of horizontal semiaxis of ellipse

B abbreviation for factor preceding integral on right side of equation (3) (compare eq. (3a))

c wetted semiwidth of hull in any transverse plane

c' modified wetted semiwidth of hull in any transverse plane

C_Δ beam-loading coefficient, $W/8\rho g a^3$

D abbreviation for integral on right side of equation (3) (compare eq. (3a))

F_v vertical component of hydrodynamic impact load

g acceleration due to gravity

h length of vertical semiaxis of ellipse

l wetted length of model

n_{i_w} vertical hydrodynamic load factor, F_v/W

P abbreviation for left side of equation (3) (compare eq. (3a))

p instantaneous pressure

$T = \dfrac{1}{\tan^{-1}\frac{h}{a}} - \dfrac{2}{\pi}$ (see eq. (2))

t time after water contact

V instantaneous resultant velocity of aircraft

W total weight of aircraft

$\dot{x}$ instantaneous velocity of aircraft parallel to undisturbed water surface in plane of symmetry

z instantaneous draft of hull at step normal to undisturbed water surface

$\dot{z}$ instantaneous velocity of airplane normal to undisturbed water surface

$\ddot{z}$ instantaneous acceleration of airplane normal to undisturbed water surface

ζ immersion of hull bottom normal to itself below undisturbed water surface at intersection of plane of symmetry with any transverse plane of hull

ζ' immersion of hull bottom normal to itself below elevated water surface at intersection of plane of symmetry with any transverse plane of hull

$\dot{\zeta}$ velocity normal to hull bottom in plane of symmetry, $\dot{x} \sin \tau + \dot{z} \cos \tau$

$\ddot{\zeta}$ acceleration normal to hull bottom in plane of symmetry

η distance from center of ellipse parallel to horizontal axis thereof

$\dot{\xi}$ velocity parallel to hull bottom in plane of symmetry, $\dot{x} \cos \tau - \dot{z} \sin \tau$

β approximate over-all average dead-rise angle, $\tan^{-1} \frac{h}{a}$

γ flight-path angle relative to undisturbed water surface, $\tan^{-1} \frac{\dot{z}}{\dot{x}}$

θ effective dead-rise angle

κ approach parameter, $\frac{\sin \tau}{\sin \gamma_o} \cos\left(\tau + \gamma_o\right)$

ρ mass density of water

τ trim, angle between bottom of hull and undisturbed water surface in plane of symmetry

$\varphi(A)$ Pabst's hydrodynamic-aspect-ratio correction

ψ local dead-rise angle

Subscripts:

o at water contact

p peak value

s at step

DEVELOPMENT OF METHOD

A rough approximation of the total loads and pressure distributions on helicopter fuselages having $C_\Delta < 1$ during smooth-water ditchings may be obtained by means of methods outlined in references 1, 2, and 3. Considerable simplification can be achieved by assuming that the helicopter bottoms can be represented by elliptical cylinders. The resulting simplified procedure is given in the following sections of this paper and may be summarized as follows. First, the relationships between wetted width in any transverse plane and draft in that plane are given for an elliptical cylinder. Next, applying these wetted-width—draft relations to the general equations of motion results in a simple set of equations for determining the loads and motions during oblique water landings. Plots of some of the more involved parameters are given to aid in the solution of the equations. Finally, from the velocity-draft relation, the bottom pressure distribution in any transverse plane is calculated approximately by means of equations from reference 2 which were derived for V-bottom hulls. The application of these equations is based on the assumption that the pressure on an ellipse is the same as that on a V-bottom hull having the same dead-rise angle as the ellipse has locally at the water line. Thus, in computing the pressure distribution, the elliptical hull is assumed to be replaced by a V-bottom hull having a dead-rise angle which varies with draft.

Wetted-Width—Draft Relationships for Elliptical Cylinders

The variation of the wetted semiwidth c with draft ζ during the symmetrical hydrodynamic impact of an arbitrary two-dimensional form was determined by Wagner in reference 4 on the basis of an expanding-plate analogy. Reference 3 presents Wagner's solution in a form more convenient for calculation. By means of the formulas in this reference, the draft-height ratio ζ/h of an immersing prismatic body of elliptical cross section (see fig. 1) can be expressed in the form of an infinite series in the wetted-width—beam ratio c/a as

$$\frac{\zeta}{h} = \frac{1}{4}\left(\frac{c}{a}\right)^2 + \frac{1}{21.3}\left(\frac{c}{a}\right)^4 + \frac{1}{51.2}\left(\frac{c}{a}\right)^6 + \frac{1}{93.5}\left(\frac{c}{a}\right)^8 + \frac{1}{149}\left(\frac{c}{a}\right)^{10} + \frac{1}{216}\left(\frac{c}{a}\right)^{12} + \frac{1}{296}\left(\frac{c}{a}\right)^{14} + \frac{1}{389}\left(\frac{c}{a}\right)^{16} + \ldots \tag{1}$$

where the equation of the ellipse is $\zeta' = h\left[1 - \sqrt{1 - \left(\frac{c}{a}\right)^2}\right]$ and ζ' is the wetted height, or draft including water rise. Equation (1) which is plotted in figure 2 gives the physical wetted width of the hull in terms of the draft. A modifying factor leading to an effective draft—wetted-width relation giving more accurate over-all loads was obtained in reference 1. (In the reference the draft was modified while in this paper it was more convenient to modify the wetted width in an equivalent manner.) Incorporation of this factor in equation (1) results in the relation for the draft-semiwidth ratio ζ/a in terms of the modified wetted-width—beam ratio c'/a

$$\frac{\zeta}{a} = \frac{1}{\frac{1}{\tan^{-1}\frac{h}{a}} - \frac{2}{\pi}}\left[\frac{1}{4}\left(\frac{c'}{a}\right)^2 + \frac{1}{21.3}\left(\frac{c'}{a}\right)^4 + \frac{1}{51.2}\left(\frac{c'}{a}\right)^6 + \frac{1}{93.5}\left(\frac{c'}{a}\right)^8 + \frac{1}{149}\left(\frac{c'}{a}\right)^{10} + \ldots\right] \tag{2}$$

in which $\tan^{-1}\frac{h}{a}$ is the equivalent of β in reference 1. Equation (2) is plotted in figure 2 where for simplicity $\frac{1}{\tan^{-1}\frac{h}{a}} - \frac{2}{\pi}$ is replaced by T. The slope of this curve $dc'/d\zeta$ has been plotted in a form convenient for computation in figure 3. Equations (1) and (2) and the derivative of the latter, which express section water-rise characteristics in two-dimensional flow, may be applied to three-dimensional impacts as shown in the following sections.

Over-All Loads and Motions

Finite-trim case.- The determination of loads and motions during fixed-trim, smooth-water, step landings of an elliptical cylinder with a transverse step may be determined by the method of reference 1 if the aerodynamic lift is assumed equal to the weight. In deriving the equations for hydrodynamic load factor, the assumption of the equality of lift to weight was made on the basis that few ditchings would occur with rotor blades or wings missing. The relation between the ratio of the

draft normal to the bottom at the step to the semibeam ζ_s/a, and the vertical-velocity ratio $\dot{z}/\dot{z}_o$ as given by reference 1 can be expressed in the form

$$\frac{1+\kappa}{\frac{\dot{z}}{\dot{z}_o}+\kappa}\, e^{\frac{\kappa}{1+\kappa}-\frac{\kappa}{\frac{\dot{z}}{\dot{z}_o}+\kappa}} - 1 = \frac{0.051\pi\,\varphi(A)}{C_\Delta \tan\tau}\int_0^{\zeta_s/a}\left(\frac{c'_s}{a}\right)^2 d\,\frac{\zeta_s}{a} \tag{3}$$

where

$$\kappa = \frac{\sin\tau}{\sin\gamma_o}\cos(\tau+\gamma_o)$$

$$C_\Delta = \frac{W}{8\rho g a^3}$$

and, according to reference 5,

$$\varphi(A) = \left(\frac{1}{1+\frac{1}{A^2}}\right)^{1/2}\left(1-\frac{0.425}{A+\frac{1}{A}}\right)$$

The aspect ratio of the hull is approximated by the relation

$$A = \frac{h/a}{\tan\tau}$$

The approach parameter κ is presented in figure 4 as a function of initial flight-path angle γ_o for various values of the trim τ (see fig. 1). The left side of equation (3), which is designated P for convenience, is presented in figure 5 as a function of κ for various values of $\dot{z}/\dot{z}_o$. The correction for three-dimensional flow $\varphi(A)$ is

plotted against A in figure 6. The integral on the right side of equation (3), designated as D, has been evaluated and is presented in figure 7 in a form convenient for use in calculation. The quantity $\frac{0.051\pi\ \varphi(A)}{C_\Delta \tan \tau}$ is hereinafter designated $1/B$ so that equation (3) can be abbreviated as

$$P = \frac{D}{B} \tag{3a}$$

The relation between the vertical acceleration $\ddot{z}$, the vertical velocity $\dot{z}$, and normal draft at the step ζ_s can be obtained from reference 1 and is

$$\frac{\ddot{z}a}{\dot{z}_o^{\,2}} = -\frac{\left[\frac{c'_s}{a}\left(\frac{\dot{z}}{\dot{z}_o} + \kappa\right)\right]^2}{\left[\frac{C_\Delta \tan \tau}{0.051\pi\ \varphi(A)} + \int_0^{\zeta_s/a}\left(\frac{c'_s}{a}\right)^2 d\,\frac{\zeta_s}{a}\right]\cos \tau} \tag{4}$$

or

$$\frac{\ddot{z}a}{\dot{z}_o^{\,2}} = -\frac{\left[\frac{c'_s}{a}\left(\frac{\dot{z}}{\dot{z}_o} + \kappa\right)\right]^2}{(B + D)\cos \tau} \tag{4a}$$

The preceding equations and curves permit the calculation of the instantaneous relationships between acceleration, velocity, and draft throughout an oblique impact of an elliptical cylinder. Since the general equations of reference 1 were derived on the basis that the aerodynamic lift is equal to the weight, the vertical hydrodynamic load F_V is simply equal to the product of the total impacting mass and the acceleration $\ddot{z}$.

In order to obtain time histories for purposes of calculating structural response, the time variation with draft can be obtained by graphical integration of the equation

$$\frac{tV_o}{a} = \frac{\cos \tau}{\sin \gamma_o}\int_0^{\zeta_s/a}\frac{d\,\frac{\zeta_s}{a}}{\dot{z}/\dot{z}_o} \tag{5}$$

where V_o is the initial resultant velocity at water contact.

Some bottom sections of certain helicopters are almost flat. For these cases the loads and motions may be calculated by the procedure given in reference 6. For impacts of bodies of many shapes having values of C_Δ greater than 1, references 6 and 7 give computational procedures which may be used.

Zero-trim case.- For the special case of impacts at zero trim where the resultant velocity is normal to the keel, that is, $\tau = 0^\circ$ and $\gamma_o = 90^\circ$, the equations of motion (3) and (4) become invalid and are replaced by the following approximate equations obtained from equations (1) and (2) of reference 1:

$$\frac{\dot{z}}{\dot{z}_o} = \frac{1}{1 + \frac{0.051\pi \frac{l}{a} \varphi\left(A_{av}\right)(c'/a)^2}{C_\Delta}} \tag{6}$$

and

$$\frac{\ddot{z}a}{\dot{z}_o{}^2} = -\frac{0.102\pi \frac{l}{a} \varphi\left(A_{av}\right)\frac{c'}{a}\frac{dc'}{d\zeta}\left(\frac{\dot{z}}{\dot{z}_o}\right)^3}{C_\Delta} \tag{7}$$

where A_{av} is the average wetted aspect ratio which is assumed to remain constant and is given by

$$A_{av} = \frac{l}{a} \tag{8}$$

The use of this expression should lead to a fair approximation of the motions if the immersing section is relatively long compared to its width.

Pressure Distribution

The pressure distribution on an elliptical cylinder in oblique impact can be calculated to a very rough approximation by means of the formulas in reference 2. These equations which are based on a modification of Wagner's expanding-plate analogy take into account the effects

of trim. The equation for calculation of the peak pressure p_p on the hull bottom in any transverse plane is given as

$$\frac{p_p}{\frac{1}{2}\rho\dot{\zeta}^2} = \frac{1}{\sin^2\tau + \frac{4}{\pi^2}\tan^2\psi\cos^2\tau} \tag{9}$$

where β in the equations of reference 2 is replaced by ψ the local dead-rise angle in the plane (see fig. 1) which is defined (for an ellipse) by the relation

$$\tan\psi = \frac{h/a}{\sqrt{\left(\frac{a}{c}\right)^2 - 1}} \tag{10}$$

The distribution of the pressure p on the hull bottom in any transverse plane may be obtained from the equation

$$\frac{p}{\frac{1}{2}\rho\dot{\zeta}^2} = \frac{\pi\cot\theta}{\sqrt{1 - \left(\frac{\eta}{c}\right)^2}} - \frac{1}{\left(\frac{c}{\eta}\right)^2 - 1} + \frac{2\ddot{\zeta}\,\varphi(A)c}{\dot{\zeta}^2}\sqrt{1 - \left(\frac{\eta}{c}\right)^2} \tag{11}$$

where η/c gives the location of this pressure in terms of the wetted width and θ may be determined from the relation

$$\frac{p_p}{\frac{1}{2}\rho\dot{\zeta}^2} = \left(\frac{\pi}{2}\cot\theta\right)^2 + 1 \qquad \left(\pi\cot\theta \geqq 2\right) \tag{12}$$

or

$$\frac{p_p}{\frac{1}{2}\rho\dot{\zeta}^2} = \pi\cot\theta \qquad \left(\pi\cot\theta \leqq 2\right) \tag{13}$$

where p_p is defined by equation (9). For the purposes of this paper the acceleration term in equation (11) is dropped in order to simplify calculation since this term is believed to be usually small compared with the other terms of the pressure equations in this application. Omission of this term results in errors on the conservative side and reduces equation (11) to the equation

$$\frac{p}{\frac{1}{2}\rho\dot{\zeta}^2} = \frac{\pi \cot \theta}{\sqrt{1 - \left(\frac{\eta}{c}\right)^2}} - \frac{1}{\left(\frac{c}{\eta}\right)^2 - 1} \tag{14}$$

Equations (9) to (14) are applicable to the determination of the approximate transverse pressure distribution on bodies the cross sections of which can be approximated by ellipses. In order to apply these equations, however, the wetted-width—draft relation $\left(c/a = f(\zeta/h)\right)$ must be obtained for each section from equation (1) or figure 2 and the normal velocity $\dot{\zeta}$ must be selected or obtained from the previous section. It is probably more satisfactory to assume no velocity reduction following water contact ($\dot{\zeta}$ constant) for pressure calculations since this condition is approximated in rough-water landings where a wave may wet only a small length of the bottom. This local wetting can result in substantial local pressures while inducing only small total loads, with accompanying small changes in velocity, until the fuselage immerses deep enough to involve large lengths. The pressure distributions for the helicopters having flat bottom sections may be calculated by means of the method given in reference 8.

ILLUSTRATIVE EXAMPLE

In order to illustrate typical results obtained from the application of the proposed computational procedure given in detail in the appendix, a sample computation was made for the water landing of a hypothetical fuselage. The geometry of the body and impact are shown in figure 1 along with the elliptical approximation to the bottom cross section. The approximating ellipse was used for the hull bottom in the computations. A transverse-stepped hull was chosen since the derivation assumes one, and a finite trim was selected since the occurrence of zero-trim impacts, although usually leading to larger forces, is believed to be infrequent. The initial contact conditions selected were as follows:

$$\tau = 5^{\circ}$$

$$\dot{x}_o = 9 \text{ fps}$$

$$\dot{z}_o = 9 \text{ fps}$$

$$W = 5{,}500 \text{ lb}$$

$$\rho = 1.938 \text{ slugs/cu ft}$$

Carrying out the computational procedure for these initial conditions results in the load and motion time histories presented in figure 8.

A plot of the pressure distribution for a given instant of time during the impact is presented in figure 9(a). The variation of the transverse pressure distribution with time, shown in figure 9(b), is the variation to be expected at section a of this model during immersion. From this plot it appears that very high local pressures would exist on the hull bottom. It is believed, however, that these high pressures are not serious since they are highly localized. The skin tension and bending produced by the integrated local pressures would in almost all cases be much more significant. A measure of this integrated pressure is shown in figure 9(c) for different panel widths. These pressures were obtained by taking the highest average pressure over specified panel widths from the transverse pressure distributions of figure 9(b) and plotting these average pressures at the centers of the assumed panels. Such plots would be useful for panel and stringer design. Reentrant corners or wells such as are sometimes found around landing-gear fairings should be avoided since they will result in high pressure not only over the entire area of the pocket but also to a considerable extent over the adjacent surfaces.

COMPARISON OF THEORY WITH EXPERIMENT

In order to evaluate the accuracy of the computational procedure herein proposed, rough experiments were set up in which a rigid semicylinder was dropped into a tank of water. A sketch of the model is presented in figure 10(a) which shows the locations of the dynamic-pressure pickups. This model was dropped vertically at 0° trim with no lift force and was fitted close to the tank walls at the ends to simulate two-dimensional conditions. The pressures, velocity, acceleration, and time were measured during the impact and some of the data are presented in figures 10(b) and 11. The measurements which were made are believed to be accurate to within 10 percent in the region of interest.

Comparisons of theoretical and experimental pressure-ratio distributions are shown in figure 10(b). The wetted width 2c for the upper two theoretical curves was taken to be the transverse distance on the hull between the experimental peak-pressure lines. The wetted width for the lowest curve was estimated. Both the theoretical and experimental pressure coefficients are based on the experimental velocity. The experimental distributions were made from cross plots of the pressure time histories. The agreement exhibited in these plots indicates that the proposed computational procedure gives a reasonable approximation of the pressure distribution on a rigid impacting cylinder.

The theoretical equations of this paper were modified to take into account reduced wing lift in order to permit direct comparison with experiment. A comparison of theoretical hydrodynamic impact load factor with the experimental free-drop data is made in figure 11. From this figure it is evident that rough agreement exists between theoretical and experimental hydrodynamic load factors. If instrument time lag and response were taken into account, the agreement shown in figure 11 would have been somewhat improved.

CONCLUDING REMARKS

A method is presented for estimating the water impact loads, motions, and pressure distributions during oblique landings of rigid bodies approximating elliptical cylinders. Comparisons of computed loads and pressures with limited experimental data obtained during water impacts of a rigid circular cylinder at a trim of 0° and a flight-path angle of 90° showed reasonable agreement. It is therefore concluded that the proposed computational procedure provides approximations suitable for rough design of hulls. The method was derived for the rigid-body case and no attempt has been made to incorporate the effect of structural deformations which might appreciably alter the loads and pressure distributions developed during an impact.

Langley Aeronautical Laboratory,
National Advisory Committee for Aeronautics,
Langley Field, Va., November 13, 1952.

APPENDIX

COMPUTATIONAL PROCEDURE

Over-All Loads and Motions

As a computational aid in applying the method developed in this paper, detailed steps are presented for determining the over-all loads and motions.

Procedure 1, for oblique impacts at finite trim angles:

(1) Approximate the bottom transverse cross section of the fuselage by an ellipse and obtain the lengths of the vertical and horizontal semiaxes h and a, respectively.

(2) Obtain a value of κ from figure 4 through use of appropriate values of initial flight-path angle γ_o and trim τ.

(3) Select several values of the vertical-velocity ratio $\dot{z}/\dot{z}_o$ between 1 and -1 and, using the value of κ, obtain a value of P from figure 5 for each value of $\dot{z}/\dot{z}_o$.

(4) Obtain a value of the approximate aspect ratio $A = \frac{h/a}{\tan \tau}$, and from figure 6 read a value of $\varphi(A)$.

(5) Compute the quantity $B = \frac{C_\Delta \tan \tau}{0.051\pi\ \varphi(A)}$ where $C_\Delta = \frac{W}{8\rho g a^3}$. The quantity W is taken as the landing weight of the helicopter, ρ is the mass density of the water, and g is the acceleration due to gravity.

(6) Compute T from the relation $T = \frac{1}{\tan^{-1} \frac{h}{a}} - \frac{2}{\pi}$.

(7) Obtain a value of D for each value of P from the equation $D = PB$, multiply these values of D by T, and by use of these values of TD and figure 7 obtain values of $\frac{\zeta_s}{a} T$. Divide these values of $\frac{\zeta_s}{a} T$ by T to obtain a value of the normal-draft—semibeam ratio $\frac{\zeta_s}{a}$ for each value of the vertical-velocity ratio $\dot{z}/\dot{z}_o$.

(8) Obtain a value of $\left(\frac{c'_s}{a}\right)^2$ for each value of $\dot{z}/\dot{z}_o$ through substitution of the values of $\frac{\zeta_s}{a}$ T into figure 2.

(9) Obtain a value of the nondimensional acceleration $\ddot{z}a/\dot{z}_o{}^2$ for each value of the normal-draft—semibeam ratio ζ_s/a and the vertical-velocity ratio $\dot{z}/\dot{z}_o$ through substitution of the appropriate quantities into the equation

$$\frac{\ddot{z}a}{\dot{z}_o{}^2} = -\frac{\left[\frac{c'_s}{a}\left(\frac{\dot{z}}{\dot{z}_o} + \kappa\right)\right]^2}{(B + D)\cos\tau}$$

Thus the values of impact load factor $n_{i_w} = -\frac{\ddot{z}}{g} = \frac{F_v}{W}$ (where lift equals weight) and the vertical velocity $\dot{z}$ are available as a function of draft at the step ζ_s. The maximum impact load factor may be obtained from a plot of $-\ddot{z}/g$ against ζ_s.

(10) For calculation of structural response, the variation of the time t with draft ζ_s may be determined from graphical integration of the equation for the nondimensional time

$$\frac{tV_o}{a} = \frac{\cos\tau}{\sin\gamma_o}\int_0^{\zeta_s/a}\frac{d\,\frac{\zeta_s}{a}}{\dot{z}/\dot{z}_o}$$

where V_o is the initial resultant velocity at water contact. Since parametric equations of time and load factor are available as functions of draft, the load-factor—time relation is determined.

Procedure 2, for impacts at 0° trim with velocity normal to keel:

(1) Approximate the bottom transverse cross section of the fuselage by an ellipse and obtain the lengths of the vertical and horizontal semiaxes h and a, respectively.

(2) Obtain the value of the average aspect ratio $A_{av} = \frac{l}{a}$ where l is the length of the immersing section and a is the half-width of the

approximating ellipse. Substitute the value of A_{av} into figure 6 to obtain $\varphi(A_{av})$.

(3) Compute T from the relation $T = \dfrac{1}{\tan^{-1}\frac{h}{a}} - \dfrac{2}{\pi}$.

(4) Select several values of the normal-draft—semibeam ratio ζ/a, multiply by T, and by use of these values and figures 2 and 3 obtain sets of values of c'/a, $(c'/a)^2$, and $dc'/d\zeta$.

(5) Compute the value of $C_\Delta = \dfrac{W}{8\rho g a^3}$.

(6) Substitute the above information into the equations

$$\frac{\dot{z}}{\dot{z}_o} = \frac{1}{1 + \dfrac{0.051\pi A_{av}\,\varphi(A_{av})(c'/a)^2}{C_\Delta}}$$

and

$$\frac{\ddot{z}a}{\dot{z}_o^{\,2}} = -\frac{0.102\pi A_{av}\,\varphi(A_{av})\dfrac{c'}{a}\dfrac{dc'}{d\zeta}\left(\dfrac{\dot{z}}{\dot{z}_o}\right)^3}{C_\Delta}$$

to obtain draft histories of velocity and acceleration ratios. Thus the values of impact load factor $n_{i_w} = -\dfrac{\ddot{z}}{g} = \dfrac{F_v}{W}$ (where lift equals weight) and the vertical velocity $\dot{z}$ are available as a function of draft. The maximum impact load factor may be obtained from a plot of $-\ddot{z}/g$ against ζ.

(7) For calculation of structural response, the variation of time t with draft ζ may be determined from graphical integration of the equation for the nondimensional time

$$\frac{tV_o}{a} = \frac{\cos\tau}{\sin\gamma_o}\int_0^{\zeta/a}\frac{d\,\frac{\zeta}{a}}{\dot{z}/\dot{z}_o}$$

where V_o is the initial resultant velocity at water contact. Since parametric equations of time and load factor are available as functions of draft, the load-factor—time relation is determined.

Pressure Distribution

The velocity-draft relation derived for the load calculation may be used in pressure calculations although a more conservative pressure distribution may be obtained by assuming that the velocity remains constant during the impact. This condition may be approximated when landing on the crest of a wave in rough water. The more general variable-velocity system is, however, described here:

(1) Select several values of the normal-draft—vertical-semiaxis ratio ζ/h and from figure 2 obtain corresponding values of $(c/a)^2$.

(2) Obtain a value of $\tan \psi$ from the equation $\tan \psi = \dfrac{h/a}{\sqrt{\left(\frac{a}{c}\right)^2 - 1}}$

for each value of ζ/h.

(3) Obtain a value of $p_p \Big/ \frac{1}{2} \rho \dot{\zeta}^2$ for each value of ζ/h from the equation

$$\frac{p_p}{\frac{1}{2} \rho \dot{\zeta}^2} = \frac{1}{\sin^2\tau + \frac{4}{\pi^2} \tan^2\psi \cos^2\tau}$$

(4) Obtain a value of $\pi \cot \theta$ for each value of $p_p \Big/ \frac{1}{2} \rho \dot{\zeta}^2$ from equation

$$\frac{p_p}{\frac{1}{2} \rho \dot{\zeta}^2} = \left(\frac{\pi}{2} \cot \theta\right)^2 + 1 \qquad (\pi \cot \theta \geqq 2)$$

or

$$\frac{p_p}{\frac{1}{2} \rho \dot{\zeta}^2} = \pi \cot \theta \qquad (\pi \cot \theta \leqq 2)$$

(5) Obtain the variation of the pressure coefficient $p\Big/\frac{1}{2}\rho\dot{\zeta}^2$ with the ratio of the lateral distance to the wetted semiwidth η/c for each value of the ratio of the normal draft to the vertical semiaxis ζ/h from the equation

$$\frac{p}{\frac{1}{2}\rho\dot{\zeta}^2} = \frac{\pi \cot \theta}{\sqrt{1 - \left(\frac{\eta}{c}\right)^2}} - \frac{1}{\left(\frac{c}{\eta}\right)^2 - 1}$$

(6) Obtain the velocity normal to the keel $\dot{\zeta}$ from the equation $\dot{\zeta} = \frac{\dot{z} + \kappa\dot{z}_o}{\cos \tau}$ for the values of ζ/h at each transverse plane, where $\dot{z}$ may be obtained from either procedure 1 or 2 and κ, from figure 4. Substitute these velocities into the equation of step 5 to obtain the variation of pressure distribution with draft and velocity. (It is believed that the average pressure over a panel section is more significant for design purposes than the actual peak pressures which are highly localized.)

REFERENCES

1. Milwitzky, Benjamin: A Theoretical Investigation of Hydrodynamic Impact Loads on Scalloped-Bottom Seaplanes and Comparisons With Experiment. NACA Rep. 867, 1947. (Supersedes NACA TN 1363.)

2. Smiley, Robert F.: Water-Pressure Distributions During Landings of a Prismatic Model Having an Angle of Dead Rise of $22\frac{1}{2}^{\circ}$ and Beam-Loading Coefficients of 0.48 and 0.97. NACA TN 2816, 1952.

3. Povitsky, A. S.: The Landing of Seaplanes. Rep. No. 423, Trans. CAHI (Moscow), 1939.

4. Wagner, Herbert: Über Stoss- und Gleitvorgänge an der Oberfläche von Flüssigkeiten. Z.a.M.M., Bd. 12, Heft 4, Aug. 1932, pp. 193-215.

5. Pabst, Wilhelm: Landing Impact of Seaplanes. NACA TM 624, 1931.

6. Schnitzer, Emanuel: Theory and Procedure for Determining Loads and Motions in Chine-Immersed Hydrodynamic Impacts of Prismatic Bodies. NACA TN 2813, 1952.

7. Smiley, Robert F.: The Application of Planing Characteristics to the Calculation of the Water-Landing Loads and Motions of Seaplanes of Arbitrary Constant Cross Section. NACA TN 2814, 1952.

8. Smiley, Robert F.: A Semiempirical Procedure for Computing the Water-Pressure Distribution on Flat and V-Bottom Prismatic Surfaces During Impact or Planing. NACA TN 2583, 1951.

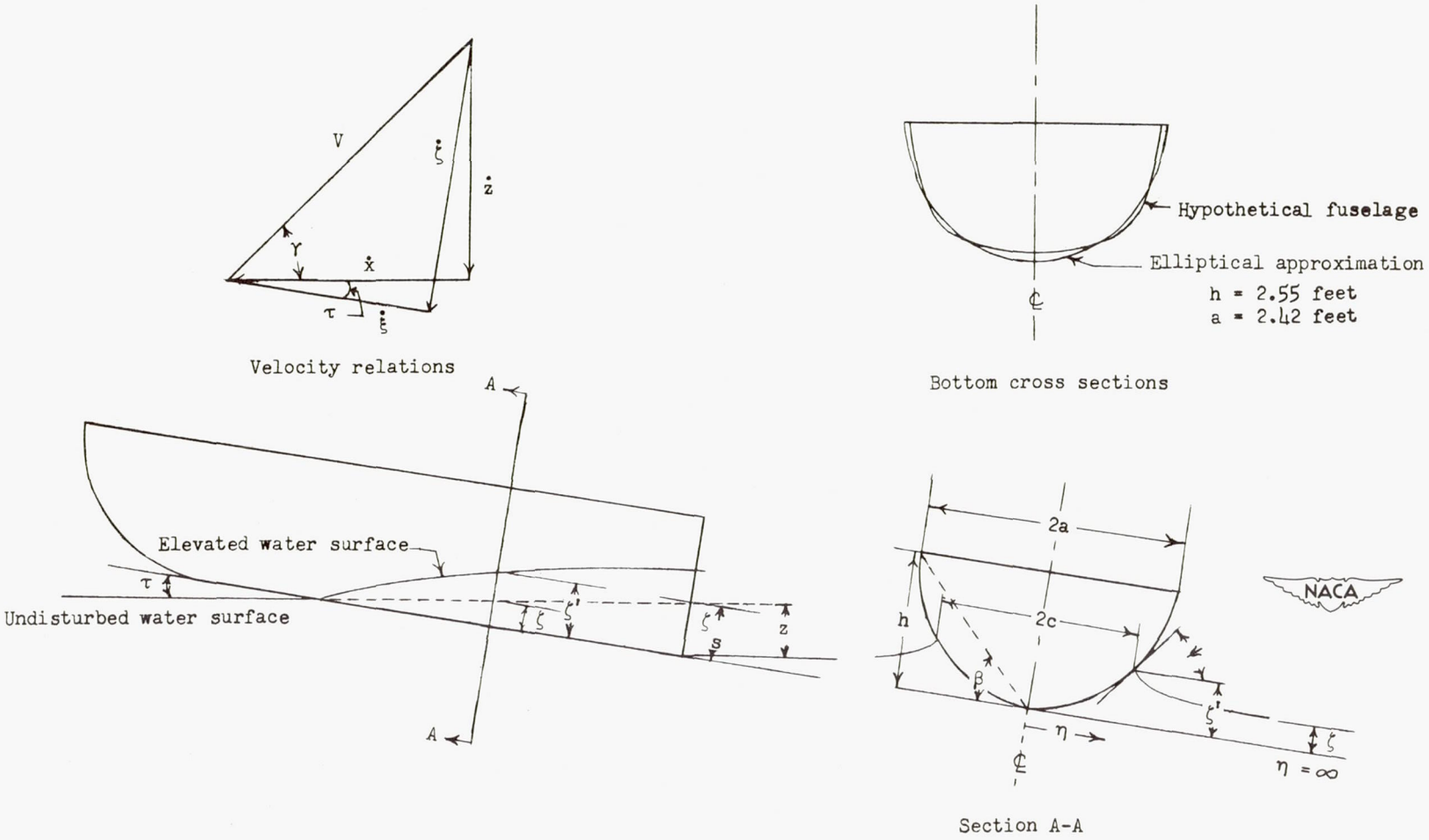

Figure 1.- Impact geometry for smooth-water landings.

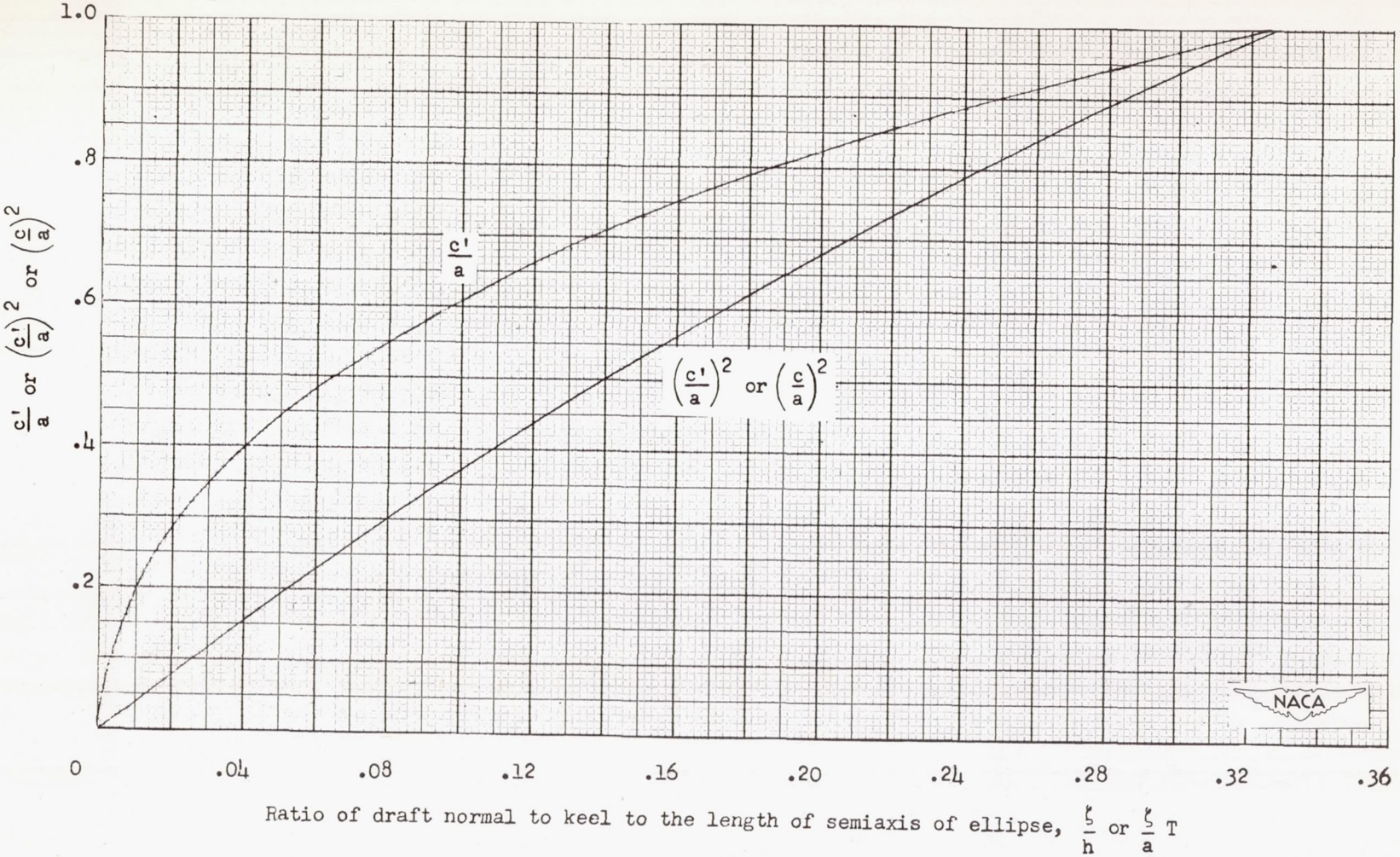

Figure 2.- Relationship of wetted width to draft during an immersion (two-dimensional flow).

$$\frac{c}{a} = f\left(\frac{\zeta}{h}\right) \text{ and } \frac{c'}{a} = f\left(\frac{\zeta}{a} T\right).$$

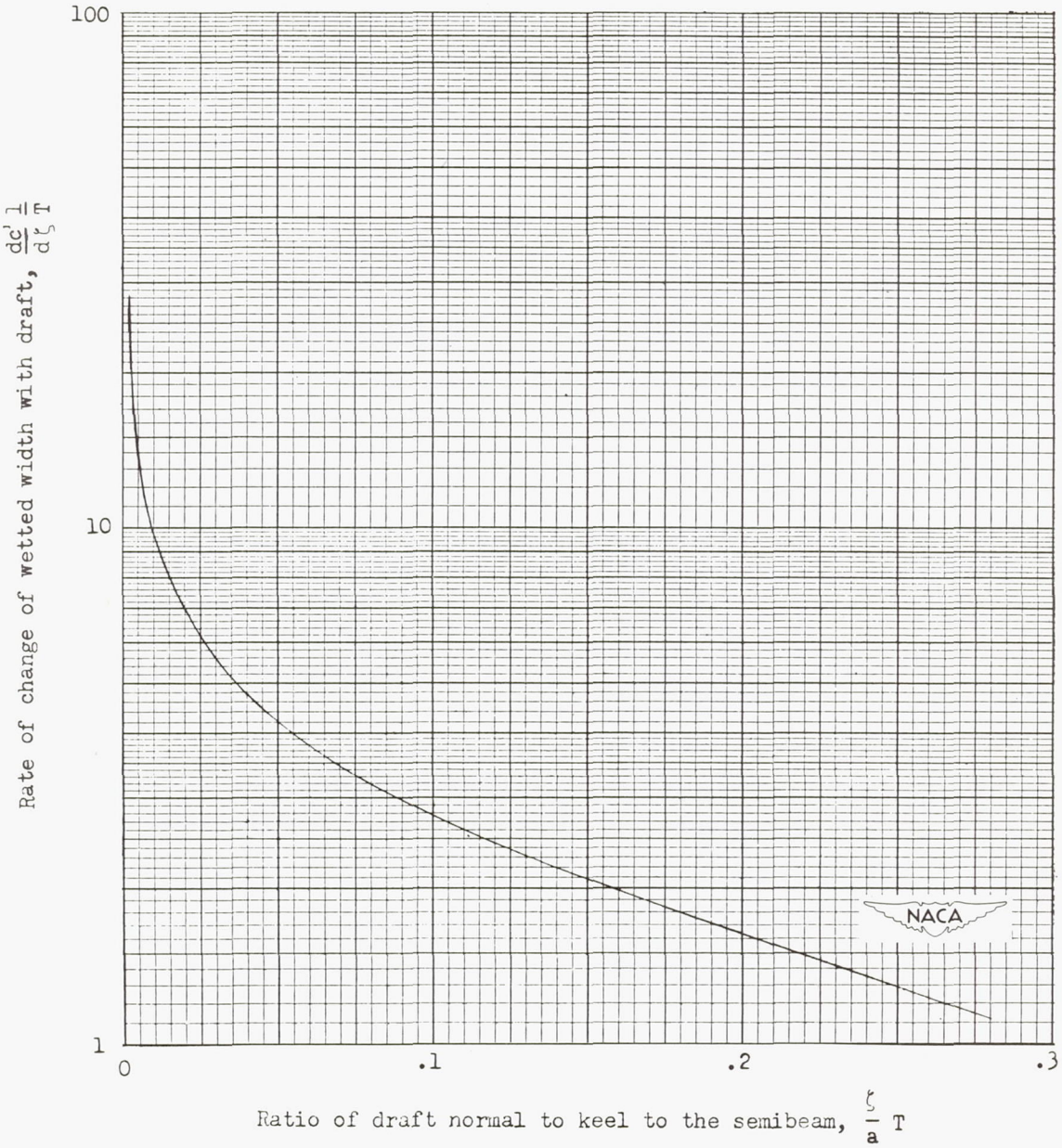

Figure 3.- Relationship of rate of growth of wetted effective width to draft during an immersion (two-dimensional flow).

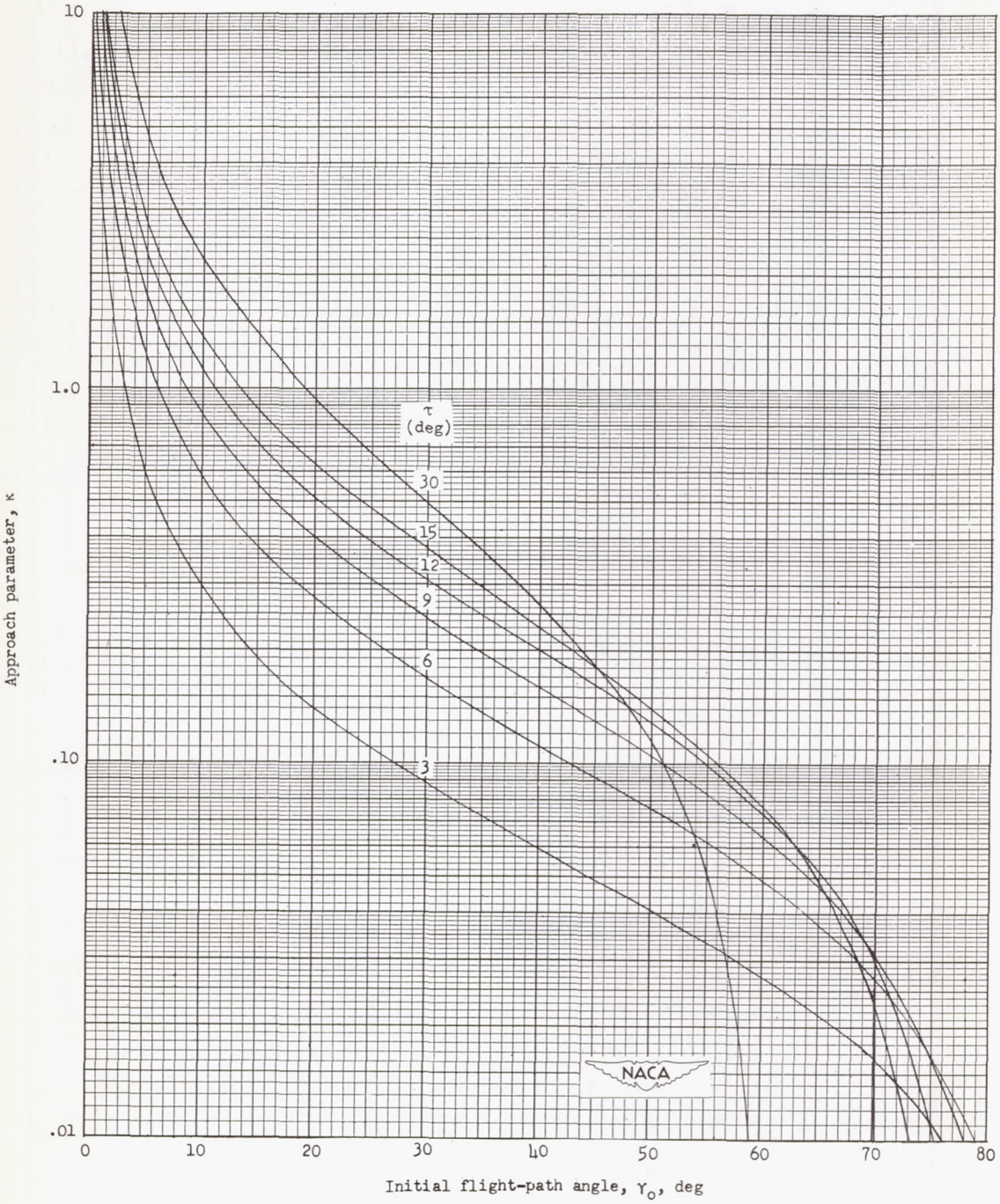

Figure 4.- Variation of approach parameter with trim and flight-path angle.

$$\kappa = \frac{\sin \tau}{\sin \gamma_o} \cos(\tau + \gamma_o).$$

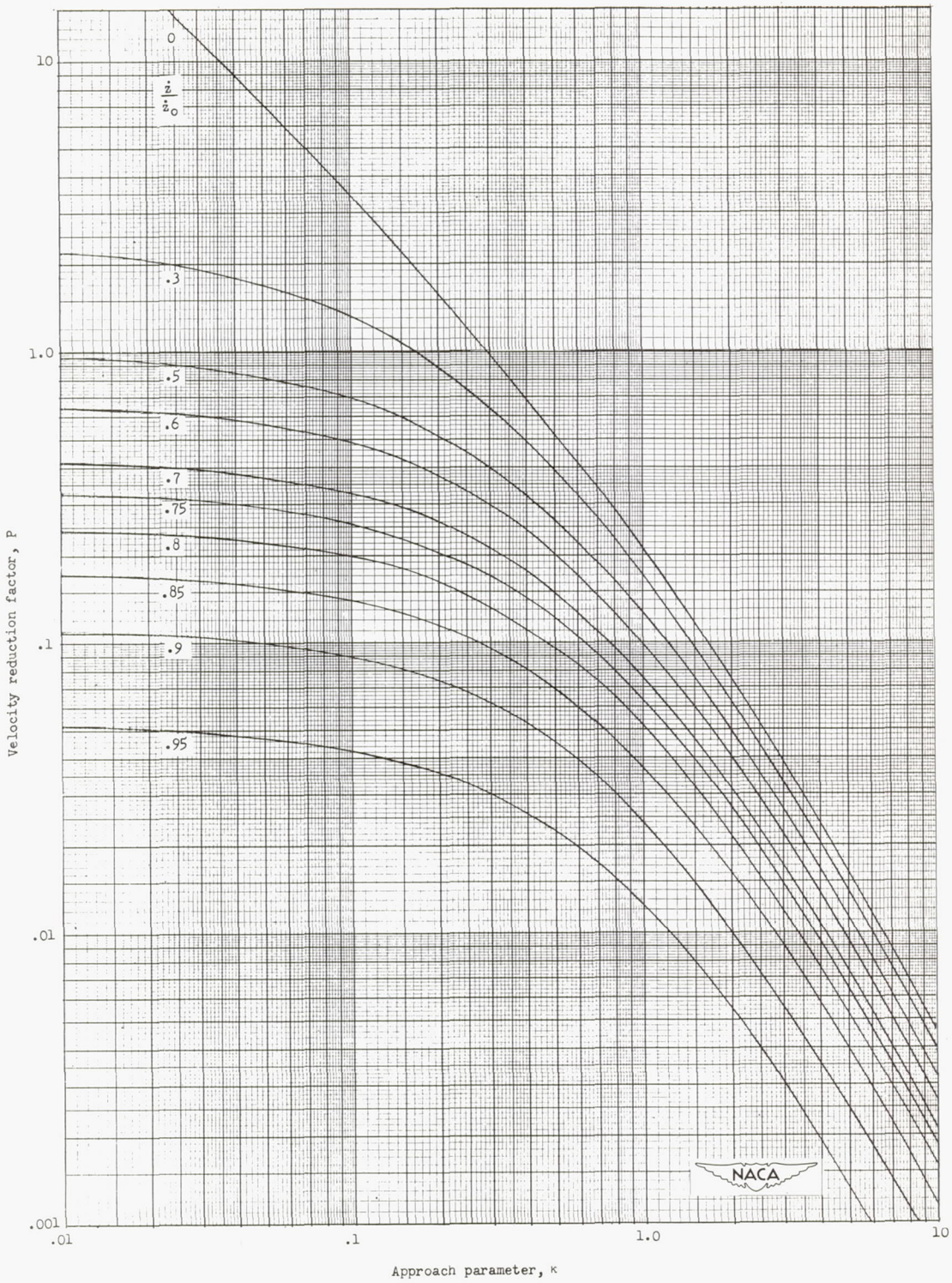

(a) Penetration.

Figure 5.- Variation of velocity reduction factor for various velocity ratios.

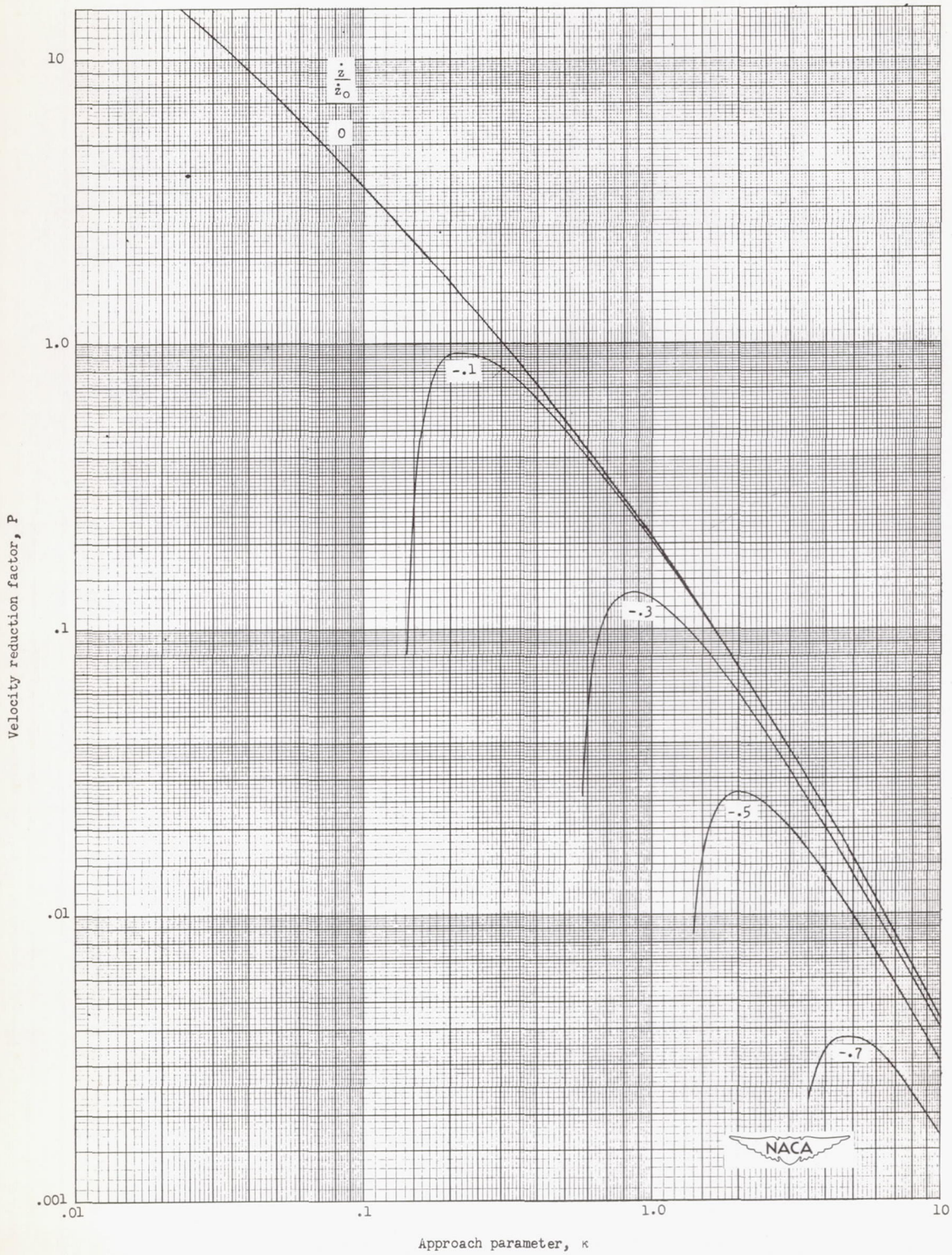

(b) Rebound.

Figure 5.- Concluded.

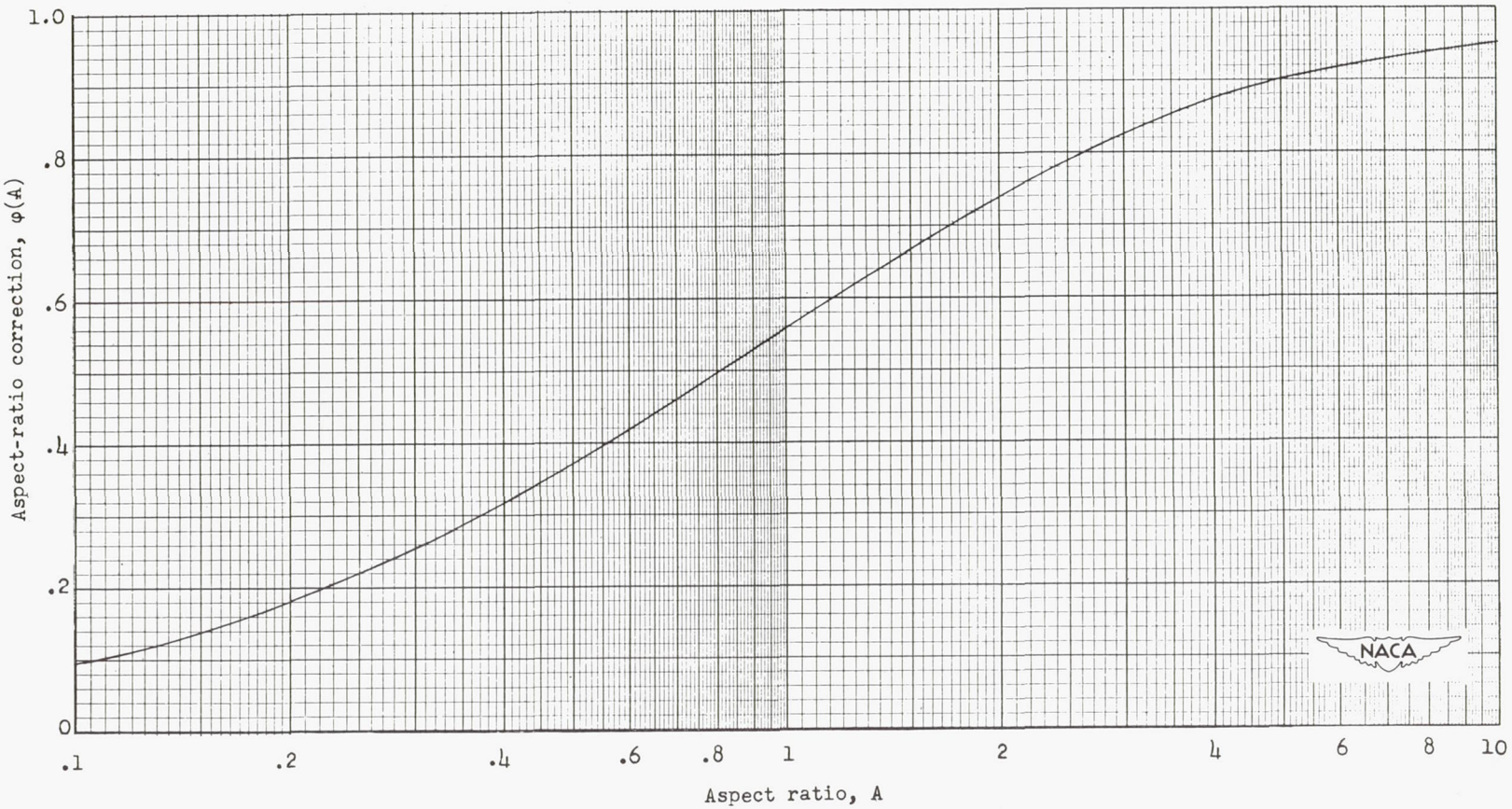

Figure 6.- Hydrodynamic-aspect-ratio correction. $\varphi(A) = \left(\frac{1}{1 + \frac{1}{A^2}}\right)^{1/2}\left(1 - \frac{0.425}{A + \frac{1}{A}}\right)$.

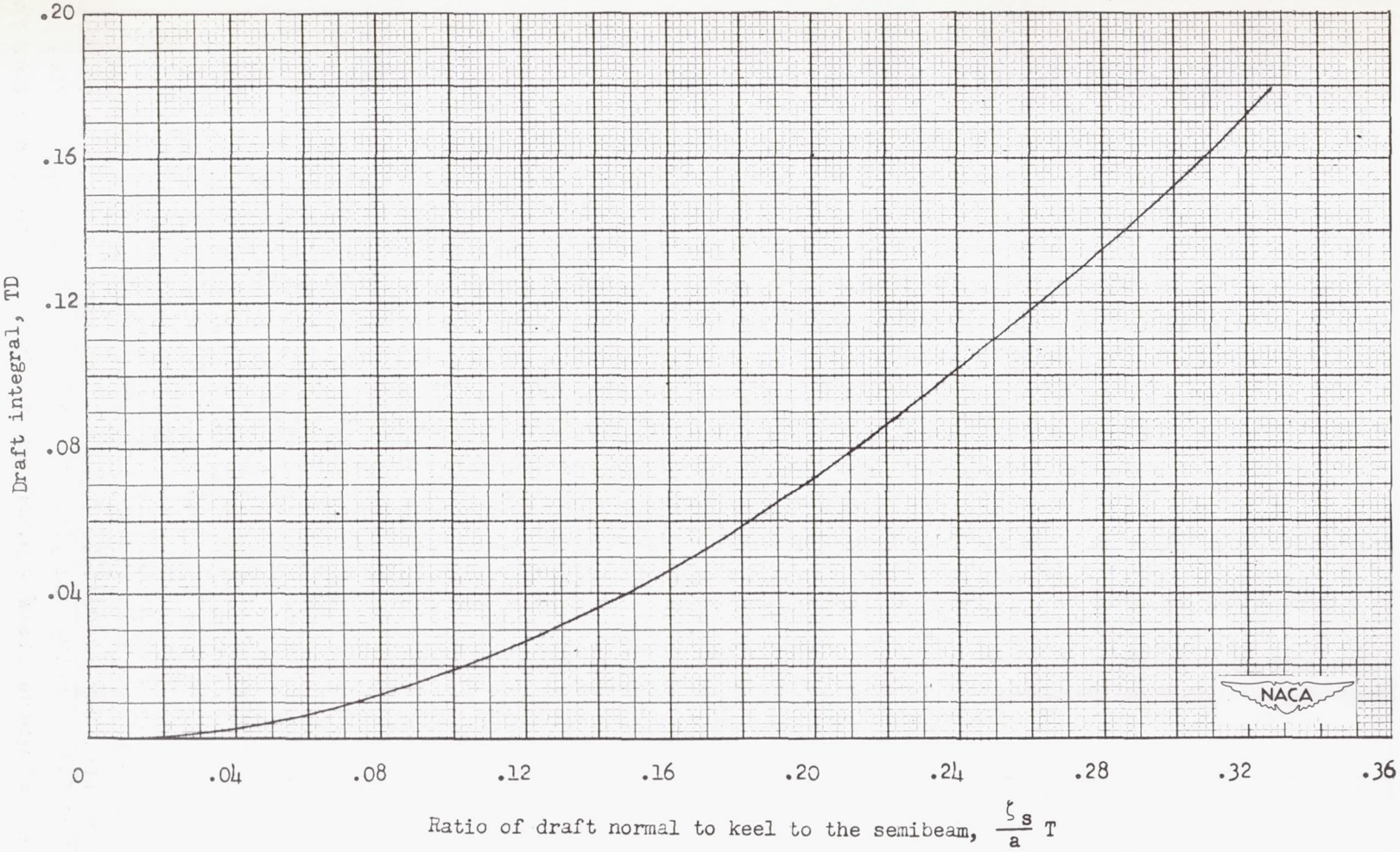

Figure 7.- Relationship of draft integral to the draft ratio.

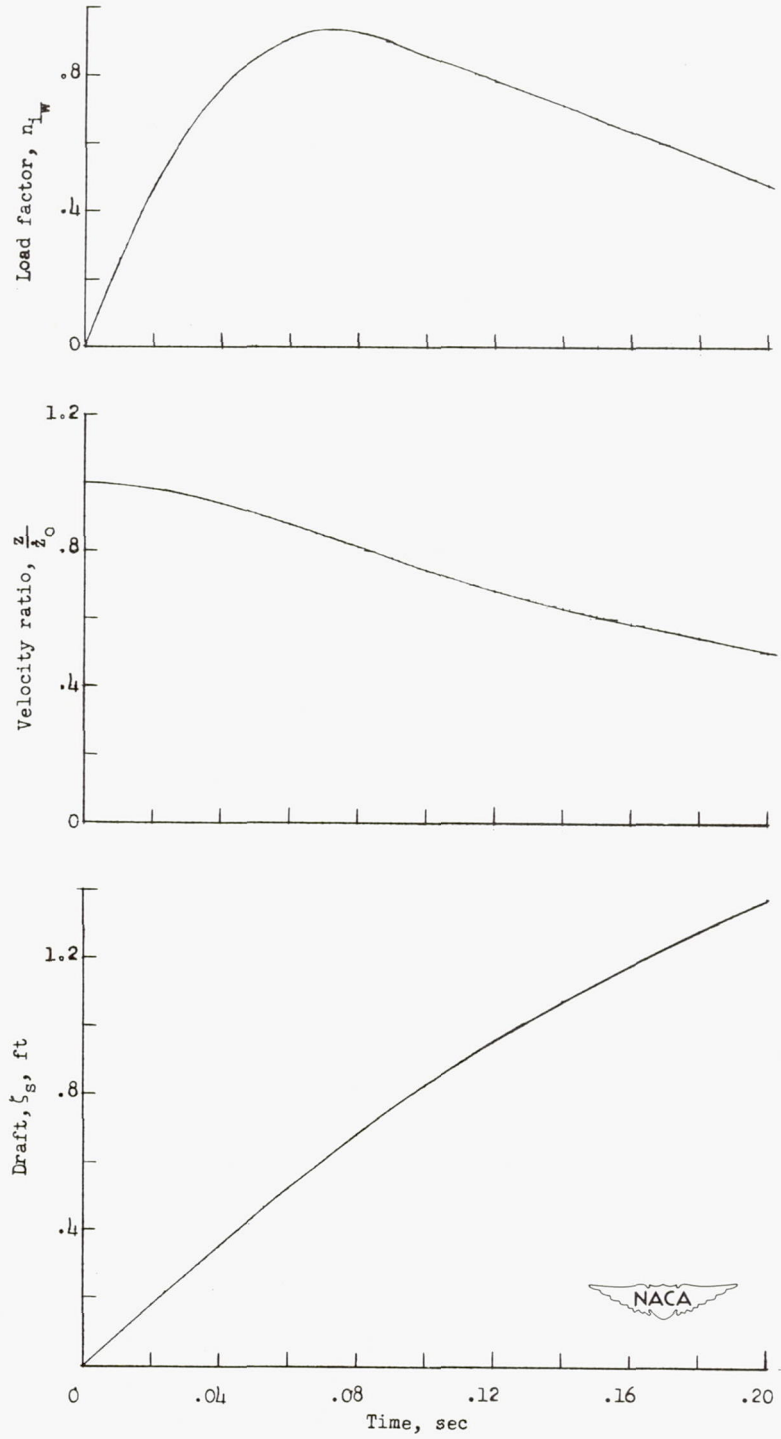

Figure 8.- Time histories of load factor, velocity ratio, and draft normal to keel during oblique impact of elliptical cylinder on smooth water for illustrative example. $\tau = 5^{\circ}$; $\dot{x}_o = 9$ fps; $\dot{z}_o = 9$ fps; $\rho = 1.938$ slugs/cu ft; $W = 5{,}500$ pounds; $h = 2.55$ feet; $a = 2.42$ feet.

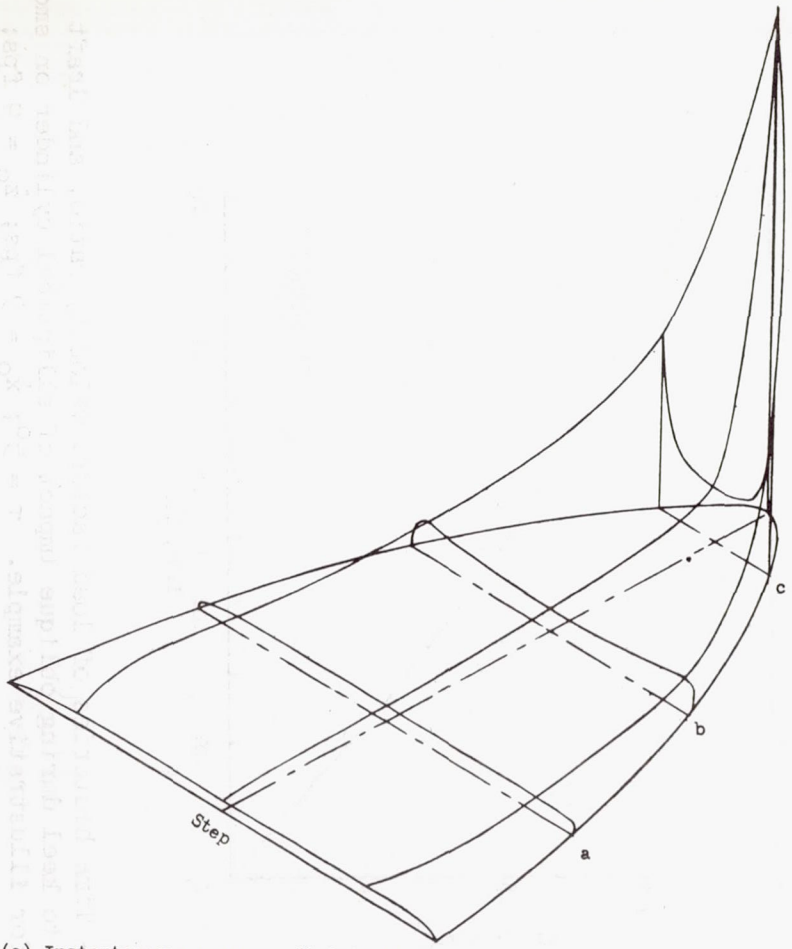

(a) Instantaneous pressure distribution on an immersing elliptical cylinder. ζ_s = 0.301 foot; $\dot{\zeta}$ = 9.34 fps.

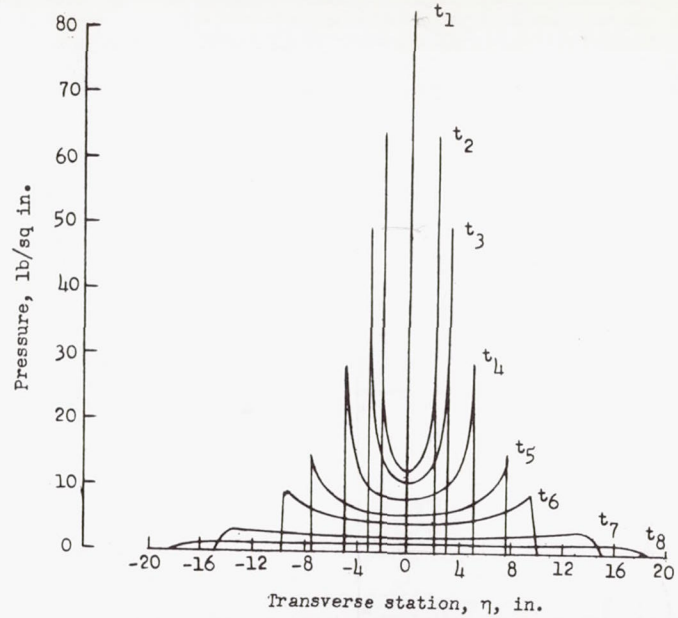

(b) Instantaneous transverse pressure distributions at section a for various times after contact.

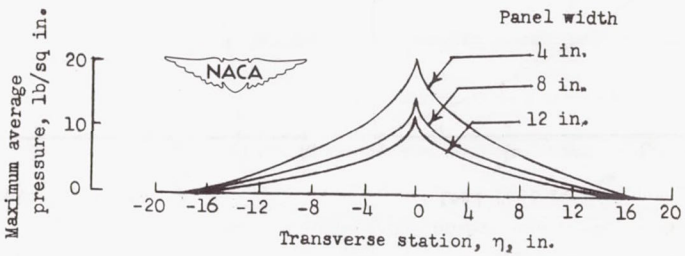

(c) Panel pressure at section a computed from figure 9(b).

Figure 9.- Pressure distributions on rigid elliptical cylinder of illustrative example during oblique impact on a smooth water surface. $\tau = 5^{\circ}$; $\dot{\zeta}_o$ = 9.75 fps; W = 5,500 pounds; ρ = 1.938 slugs/cu ft.

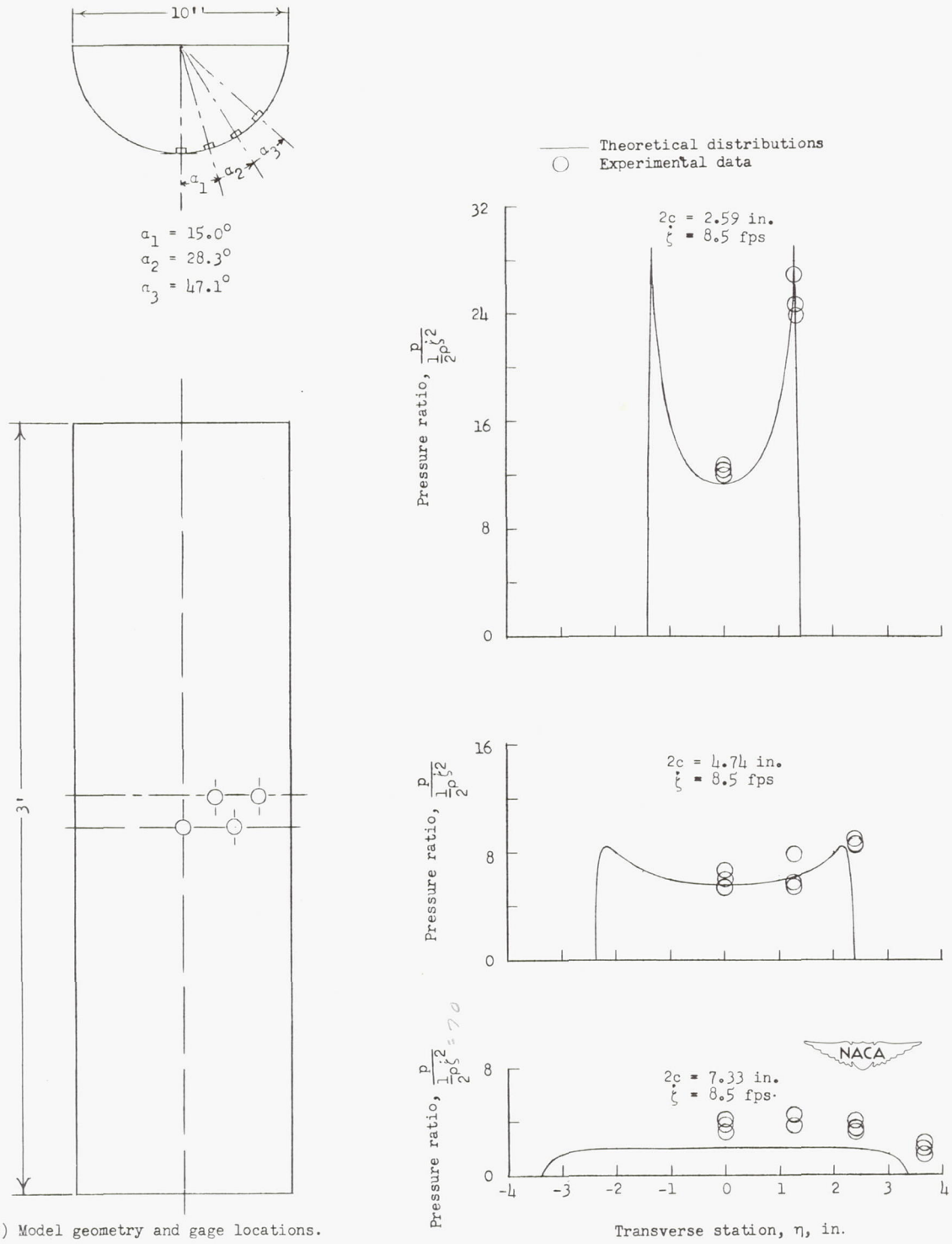

(a) Model geometry and gage locations.

(b) Transverse pressure-ratio distributions.

Figure 10.- Model geometry and transverse pressure-ratio distributions on a circular semicylinder during water impact. $\dot{\zeta}_0$ = 8.5 fps.

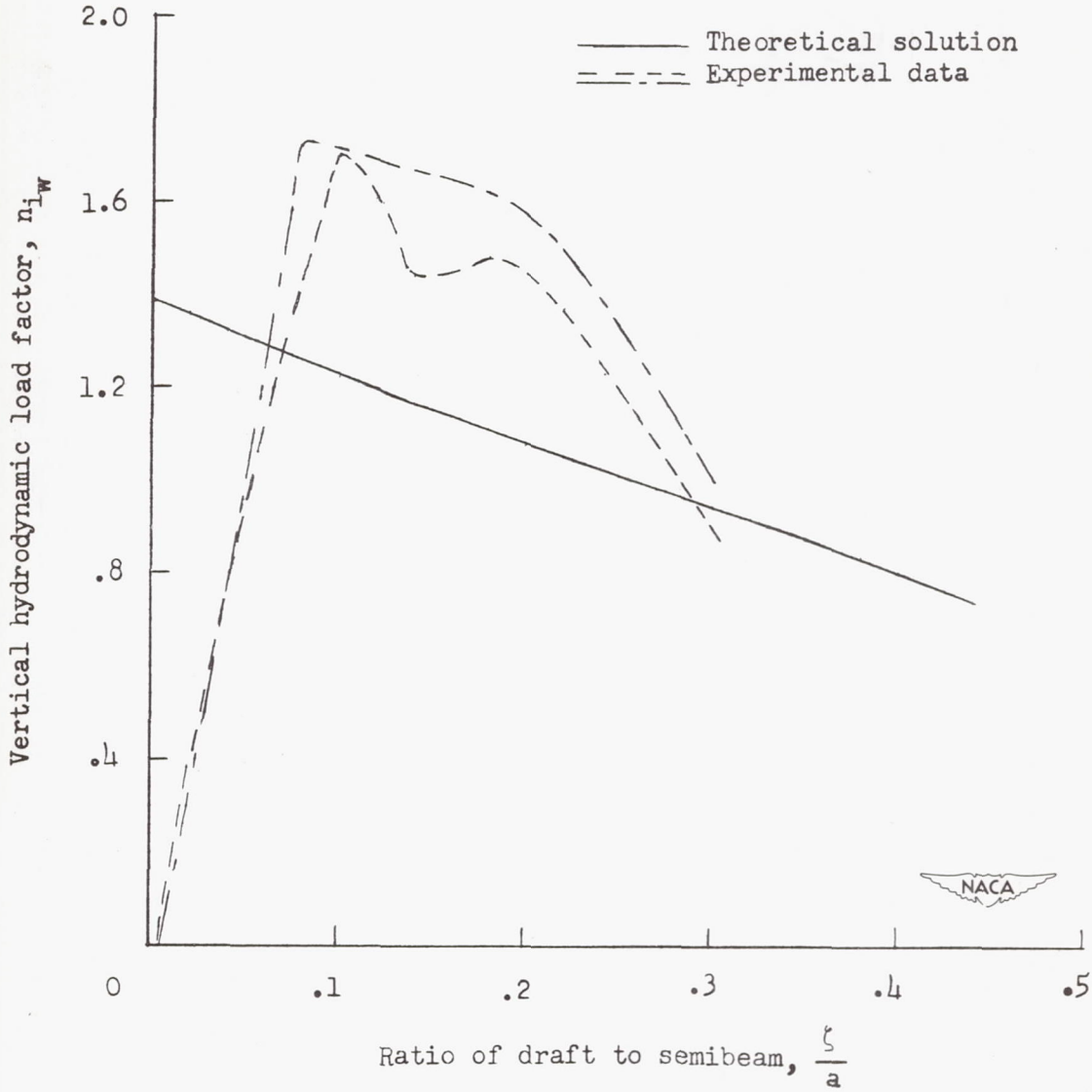

Figure 11.- Comparisons of theoretical and experimental variations of hydrodynamic load factor with draft-semibeam ratio for vertical drops at zero trim of a semicylinder into water. $\dot{\zeta}_o$ = 8.5 fps; C_Δ = 11.2.