9511
NACA TN 3220

TECH LIBRARY KAFB, NM
0066053

NATIONAL ADVISORY COMMITTEE FOR AERONAUTICS

TECHNICAL NOTE 3220

AERODYNAMIC LOADS ON A LEADING-EDGE FLAP AND A LEADING-EDGE SLAT ON THE NACA 64A010 AIRFOIL SECTION

By John A. Kelly and George B. McCullough

Ames Aeronautical Laboratory
Moffett Field, Calif.

Washington
June 1954

AFMDC
TECHNICAL LIBRARY
AFL 2811

1V

TECH LIBRARY KAFB, NM

0066053

NATIONAL ADVISORY COMMITTEE FOR AERONAUTICS

TECHNICAL NOTE 3220

AERODYNAMIC LOADS ON A LEADING-EDGE FLAP AND A LEADING-EDGE SLAT ON THE NACA 64A010 AIRFOIL SECTION

By John A. Kelly and George B. McCullough

SUMMARY

A previous report, NACA TN 3007, gave force and moment data for the NACA 64A010 airfoil section equipped alternately with a flap and a slat at the leading edge, and with a split flap and a double-slotted flap at the trailing edge. The present report presents the chordwise distributions of pressure measured concurrently with the force and moment data of NACA TN 3007. The pressure data for the leading-edge flap and slat have been converted into coefficients of normal force, chord force, and moment based on the geometry of the leading-edge device.

INTRODUCTION

Considerable information on the aerodynamic characteristics of wings equipped with leading-edge flaps or slats is available, but there are relatively few data on the loads acting on these devices. A previous report, reference 1, gave lift and pitching-moment data for the NACA 64A010 airfoil section equipped alternately with a flap and a slat at the leading edge, and with a split flap and a double-slotted flap at the trailing edge. Optimum settings, from the standpoint of maximum lift, were determined for the leading-edge devices. Additional data for the same airfoil section equipped with a leading-edge slat are given in reference 2 for a wide range of subsonic Mach numbers. The present report presents loads data derived from the chordwise distributions of pressure measured concurrently with the force and moment data reported in reference 1. Most of the pressure data are presented herein in tabular form.

The tests were conducted in the Ames 7- by 10-foot wind tunnel No. 1 at a Reynolds number of 6 million (Mach number 0.17).

NOTATION

The sign convention and reference axes for the various force and moment coefficients are shown in figure 1.

c_l	airfoil section lift coefficient[1]
c_n	leading-edge-flap or -slat normal-force coefficient[2]
c_c	leading-edge-flap or -slat chord-force coefficient[2]
c_{h_N}	leading-edge-flap hinge-moment coefficient[2]
c_{m_S}	leading-edge-slat moment coefficient[2]
P	pressure coefficient, $\frac{p_l-p_o}{q_o}$
p_l	local static pressure on model surface, lb/sq ft
p_o	free-stream static pressure, lb/sq ft
q_o	free-stream dynamic pressure, lb/sq ft
R	Reynolds number[1]
x_s,y_s	coordinates of slat reference point, percent airfoil chord
α_o	section angle of attack, deg
δ	angular deflection of high-lift device, deg

Subscripts

N	leading-edge flap
S	leading-edge slat
sf	split flap at the trailing edge
dsf	double-slotted flap at the trailing edge

MODEL

The model was a 5-foot-chord NACA 64A010 airfoil equipped with either a flap or a slat at the leading edge, and with a split or a double-slotted flap at the trailing edge. Sketches of the high-lift devices are shown in figure 2. Flush pressure orifices were built into the various components. A more complete description of the model and coordinates of its components is given in reference 1.

[1]Based on total airfoil chord.
[2]Based on chord of leading-edge flap or slat.

TESTS AND RESULTS

The measurements made during the tests include the airfoil lift coefficient, as ascertained from the wind-tunnel balance system, and the pressures indicated by the orifices built into the various components of the model. The pressure data for the leading-edge flap or slat were converted into normal-force, chord-force, and moment coefficients based on the geometry of the leading-edge device.

Loads data were computed for several arrangements of the model, including 0° and 30° deflections of the leading-edge flap and the three optimum locations of the leading-edge slat corresponding to the three trailing-edge arrangements. (A 30° deflection of the leading-edge flap was about optimum for all trailing-edge arrangements.) The loads data are presented in figures 3 to 5, and the pressure data, in tables II to VIII. The orifice stations for the leading-edge flap were projected on the airfoil chord line for all nose-flap deflections because of the additional orifices uncovered as the flap deflection was increased.[8] The orifice stations for all other components of the model were projected on the chord line of the respective component for both the retracted and deflected cases. A summary of the model arrangements investigated is given in table I.

Pressure data for additional deflections (15° and 45°) of the leading-edge flap are given in tables II to IV, and for intermediate positions of the leading-edge slat, in table VIII. The latter data are included to assist with analyses concerned with automatic operation of the slat.

DISCUSSION

Inspection of figure 3 shows that the variations of the flap normal-force and hinge-moment coefficients with airfoil lift coefficient were nearly linear. Deflecting the leading-edge flap or either of the trailing-edge flaps shifted the curves, so that for a given value of the airfoil lift coefficient, the loads acting on the leading-edge flap were less than with the flap undeflected. The maximum load on the leading-edge flap occurred with the leading-edge flap deflected in combination with the split flap at the trailing edge, although greater maximum lift for the airfoil was attained with the double-slotted flap.

The variations of normal-force and moment coefficients with lift coefficient for the leading-edge slat (figs. 4 and 5) were not radically different from those for the leading-edge flap. The variations were, however, less linear, and the signs of the moment coefficients were reversed because of the different moment centers employed in the two

[8]The static pressure coefficient in the interior of the leading-edge flap was essentially zero.

cases. A comparison of the normal-force coefficients for the leading-edge slat extended and for the leading-edge flap deflected 30° shows that the load acting on the leading-edge flap was greater than the load acting on the leading-edge slat for the same trailing-edge arrangement and value of airfoil lift coefficient.

Ames Aeronautical Laboratory
National Advisory Committee for Aeronautics
Moffett Field, Calif., Apr. 23, 1954

REFERENCES

1. Kelly, John A., and Hayter, Nora-Lee F.: Lift and Pitching Moment at Low Speeds of the NACA 64A010 Airfoil Section Equipped with Various Combinations of a Leading-Edge Slat, Leading-Edge Flap, Split Flap, and Double-Slotted Flap. NACA TN 3007, 1953.

2. Axelson, John A., and Stevens, George L.: Investigation of a Slat in Several Different Positions on a NACA 64A010 Airfoil for a Wide Range of Subsonic Mach Numbers. NACA TN 3129, 1954.

TABLE I.- MODEL ARRANGEMENTS

Leading-edge flap	Leading-edge slat	Trailing-edge flap	Loads data fig. no.	Pressure data table no.
$\delta_N=0^\circ$, 30°	- - -	None	3	II
$\delta_N=0^\circ$, 30°	- - -	Split flap, $\delta_{sf}=60^\circ$	3	III
$\delta_N=0^\circ$, 30°	- - -	Double-slotted flap, $\delta_{dsf}=52.7^\circ$	3	IV
- - -	Retracted	None[1]	4,5	V
- - -		Split flap, $\delta_{sf}=60^\circ$	4	VI
- - -		Double-slotted flap, $\delta_{dsf}=52.7^\circ$	5	VII
- - -	Optimum for no trailing-edge flap, $x_s=9.2$, $y_s=-8.7$, $\delta_s=25.6^\circ$	None	4	V
- - -		Split flap, $\delta_{sf}=60^\circ$	4	- - -
- - -		Double-slotted flap, $\delta_{dsf}=52.7^\circ$	5	- - -
- - -	Optimum for split flap deflected 60° $x_s=8.2$, $y_s=-9.3$, $\delta_s=29.1^\circ$	None	4	- - -
- - -		Split flap, $\delta_{sf}=60^\circ$	4	VI
- - -	Optimum for double-slotted flap deflected 52.7° $x_s=7.9$, $y_s=-8.1$, $\delta_s=26.1^\circ$	None	5	- - -
- - -		Double-slotted flap, $\delta_{dsf}=52.7^\circ$	5	VII

[1]Data denoted as being for the model with leading-edge slat retracted and no trailing-edge flap were actually obtained with the double-slotted flap retracted. (See ref. 1.)

TABLE II.- PRESSURE DISTRIBUTION FOR THE NACA 64A010 AIRFOIL SECTION WITH A LEADING-EDGE FLAP AND NO TRAILING-EDGE FLAP

(a) $\delta_N = 0^{\circ}$

Airfoil section lift coefficient, c_l	0.01		0.23		0.45		0.66		0.86		1.05		1.10		1.01	
Chordwise Station (Percent airfoil chord)	Upper	Lower	Upper	Lower	Upper	Lower	Upper	Lower	Upper	Lower	Upper	Lower	Upper	Lower	Upper	Lower
0	0.99	- - -	0.68	- - -	-0.48	- - -	-2.44	- - -	-5.00	- - -	-8.43	- - -	-9.19	- - -	-1.51	- - -
.05	.92	0.84	.27	0.94	-1.17	0.30	-3.34	-1.12	-6.02	-3.23	-9.57	-5.87	-10.32	-6.47	-1.70	-0.76
.15	.70	.52	-.37	1.00	-2.16	.81	-4.66	.01	-7.56	-1.36	-11.42	-3.17	-12.21	-3.63	-1.57	.05
.03	.36	.30	-.84	.92	-2.57	.97	-4.84	.56	-7.37	-.34	-10.72	-1.59	-11.42	-1.92	-1.53	.50
.05	.15	.14	-.99	.78	-2.50	1.01	-4.43	.90	-4.68	.45	-10.09	-.27	-10.51	-.46	-1.51	.83
.75	.02	.03	-.97	.66	-2.21	.96	-4.08	.99	-4.52	.77	-7.04	.32	-7.42	.19	-1.50	.95
1.25	-.01	-.08	-.78	.50	-1.62	.85	-2.61	1.000	-3.82	.97	-5.04	.81	-5.30	.76	-1.47	1.00
2.5	-.08	-.13	-.63	.31	-1.22	.64	-1.91	.87	-2.67	.99	-3.45	1.00	-3.61	1.00	-1.44	.93
3.33	-.12	-.17	-.60	.23	-1.12	.54	-1.70	.77	-2.34	.92	-2.99	.99	-3.13	1.00	-1.44	.87
5	-.17	-.21	-.56	.14	-.97	.41	-1.44	.65	-1.93	.81	-2.43	.92	-2.52	.94	-1.45	.75
7.5	- - -	-.21	- - -	.08	- - -	.31	- - -	.52	- - -	.68	- - -	.80	- - -	.83	- - -	.63
10	-.21	-.25	-.45	0	-.74	.21	-1.05	.41	-1.36	.57	-1.65	.70	-1.72	.73	-1.50	.53
12	-.24	- - -	-.48	- - -	-.74	- - -	-1.01	- - -	-1.27	- - -	-1.54	- - -	-1.59	- - -	-1.51	- - -
14	-.24	- - -	-.48	- - -	-.73	- - -	-.97	- - -	-1.21	- - -	-1.44	- - -	-1.48	- - -	-1.50	- - -
16.5	- - -	-.26	- - -	-.01	- - -	.11	- - -	.27	- - -	.41	- - -	.52	- - -	.55	- - -	.37
17	-.27	- - -	-.48	- - -	-.70	- - -	-.92	- - -	-1.14	- - -	-1.33	- - -	-1.35	- - -	-1.37	- - -
20	-.28	-.29	-.47	-.11	-.67	.05	-.87	.20	-1.05	.33	-1.24	.45	-1.27	.47	-1.40	.30
25	-.29	-.30	-.46	-.14	-.63	0	-.79	.14	-.95	.26	-1.10	.37	-1.12	.39	-1.32	.21
30	-.30	-.31	-.45	-.17	-.59	-.05	-.74	.08	-.87	.19	-.99	.30	-1.01	.32	-1.22	.14
35	-.31	-.31	-.45	-.19	-.57	-.07	-.70	.04	-.82	.15	-.92	.24	-.93	.27	-1.11	.09
40	-.26	-.32	-.44	-.21	-.56	-.10	-.66	0	-.76	.10	-.85	.19	-.85	.21	-1.01	.03
45	-.30	-.30	-.41	-.20	-.51	-.10	-.59	-.01	-.68	.08	-.75	.16	-.76	.19	-.92	0
50	-.27	-.27	-.36	-.18	-.45	-.10	-.53	-.01	-.60	.07	-.65	.14	-.66	.16	-.83	-.02
55	-.24	-.24	-.31	-.16	-.39	-.08	-.45	0	-.52	.07	-.56	.14	-.56	.15	-.74	-.04
60	-.21	-.21	-.28	-.14	-.34	-.07	-.39	0	-.45	.07	-.47	.12	-.47	.14	-.67	-.05
65	-.17	-.16	-.23	-.10	-.28	-.05	-.33	.01	-.37	.07	-.39	.12	-.39	.14	-.61	-.05
70	-.12	-.13	-.18	-.08	-.22	-.03	-.26	.03	-.29	.08	-.31	.12	-.30	.14	-.55	-.06
75	-.09	-.09	-.13	-.05	-.16	-.01	-.19	.04	-.21	.08	-.23	.12	-.22	.14	-.50	-.07
80	-.06	-.05	-.08	-.01	-.11	.02	-.13	.06	-.15	.10	-.15	.12	-.15	.14	-.45	-.07
85	-.02	-.01	-.04	.01	-.06	.05	-.07	.07	-.08	.10	-.08	.12	-.08	.13	-.41	-.08
90	.03	.03	.01	.05	.01	.07	0	.08	-.01	.10	-.01	.12	-.01	.12	-.37	-.11
95	.07	.08	.07	.08	.07	.09	.07	.10	.06	.11	.05	.10	.05	.11	-.32	-.16
97.5	.11	.11	.17	.11	.11	.11	.10	.12	.10	.11	.08	.10	.07	.10	-.30	-.20

TABLE II.- PRESSURE DISTRIBUTION FOR THE NACA 64A010 AIRFOIL SECTION WITH A LEADING-EDGE FLAP AND NO TRAILING-EDGE FLAP - Continued

(b) $\delta_N = 15^\circ$

Airfoil section lift coefficient, c_l		-0.04		0.41		0.85		1.05		1.24		1.41		1.49		1.46	
Chordwise station (percent airfoil chord)		Upper	Lower	Upper	Lower	Upper	Lower	Upper	Lower	Upper	Lower	Upper	Lower	Upper	Lower	Upper	Lower
Upper	Lower																
-0.48	-0.36	-0.94	-2.27	0.73	0.73	-0.07	0.55	-1.33	-0.65	-2.96	-2.37	-5.00	-4.60	-7.59	-6.28	-5.96	-4.74
-.49	-.22	-.43	-2.90	.97	.38	-.73	.92	-2.68	.29	-5.17	-.79	-8.06	-2.30	-10.18	-3.41	-8.14	-2.58
-.44	-.03	-.41	-2.86	.82	.17	-1.65	1.01	-3.96	.70	-6.77	.03	-9.90	-.99	-12.17	-1.77	-10.10	-1.23
-.35	.22	-.67	-2.47	.52	.04	-2.12	1.00	-4.29	.95	-6.83	.63	-9.60	.07	-11.60	-.38	-9.80	-.07
-.20	.50	1.00	-2.27	.30	-.04	-2.16	.94	-4.01	1.01	-6.25	.87	-8.92	.53	-10.51	.25	-8.80	.44
-.02	1.05	.99	-1.62	.13	-.08	-1.98	.82	-3.63	.99	-5.31	1.00	-6.58	.90	-7.91	.77	-6.76	.85
.42	2.38	.91	-1.12	.05	-.06	-1.70	.65	-2.48	.86	-3.67	.97	-4.86	1.01	-5.74	1.00	-4.78	1.00
1.50	3.24	.69	-.96	-.09	-.05	-1.26	.59	-2.01	.79	-2.76	.92	-3.52	.99	-4.05	1.00	-3.57	.99
2.25	4.96	.57	-.71	-.18	-.01	-1.23	.51	-1.87	.69	-2.51	.83	-3.16	.92	-3.61	.98	-3.17	.93
3.75	7.50	.39	-.46	-.30	.07	-1.19	.48	-1.72	.63	-2.24	.76	-2.75	.85	-3.10	.90	-2.72	.85
6.04	10.01	- - -	-.29	- - -	.12	- - -	.46	- - -	.59	- - -	.70	- - -	.80	- - -	.85	- - -	.80
8.36	13.51	.03	- - -	-.58	- - -	-1.25	- - -	-1.63	- - -	-1.99	- - -	-2.33	- - -	-2.55	- - -	-2.17	- - -
10.22	16.5	-.17	.05	-.78	.34	-1.48	.54	-1.85	.63	-2.21	.69	-2.52	.77	-2.73	.80	-2.30	.77
12.08	- - -	-.35	- - -	-.80	- - -	-1.33	- - -	-1.62	- - -	-1.89	- - -	-2.12	- - -	-2.27	- - -	-1.83	- - -
12.71	- - -	-.83	- - -	-1.57	- - -	-2.36	- - -	-2.78	- - -	-3.16	- - -	-3.47	- - -	-3.68	- - -	-3.06	- - -
13.35	- - -	-.79	- - -	-1.49	- - -	-2.23	- - -	-2.62	- - -	-2.97	- - -	-3.27	- - -	-3.46	- - -	-2.83	- - -
14	- - -	-.73	- - -	-1.38	- - -	-2.07	- - -	-2.45	- - -	-2.77	- - -	-3.04	- - -	-3.22	- - -	-2.60	- - -
17	- - -	-.43	- - -	-.91	- - -	-1.45	- - -	-1.73	- - -	-1.97	- - -	-2.18	- - -	-2.30	- - -	-1.81	- - -
20	20	-.38	-.10	-.80	.35	-1.25	.41	-1.48	.50	-1.68	.52	-1.84	.62	-1.96	.71	-1.53	.62
25	25	-.35	-.20	-.70	.07	-1.05	.30	-1.23	.40	-1.40	.50	-1.51	.58	-1.59	.63	-1.30	.55
30	30	-.34	-.25	-.65	0	-.95	.23	-1.10	.32	-1.22	.41	-1.31	.49	-1.37	.54	-1.18	.47
35	35	-.35	-.27	-.61	-.04	-.87	.17	-1.00	.26	-1.10	.35	-1.17	.43	-1.20	.47	-1.07	.40
40	40	-.35	-.29	-.58	-.08	-.81	.12	-.91	.21	-.99	.29	-1.04	.38	-1.05	.41	-.98	.33
45	45	-.33	-.28	-.52	-.09	-.73	.19	-.81	.17	-.87	.25	-.90	.33	-.90	.37	-.89	.28
50	50	-.29	-.26	-.47	-.08	-.63	.09	-.70	.16	-.76	.23	-.77	.30	-.76	.33	-.81	.24
55	55	-.25	-.22	-.40	-.08	-.54	.08	-.60	.15	-.64	.21	-.64	.27	-.62	.30	-.74	.18
60	60	-.22	-.20	-.35	-.07	-.47	.07	-.51	.13	-.54	.19	-.54	.25	-.51	.27	-.68	.18
65	65	-.18	-.16	-.29	-.04	-.38	.08	-.42	.13	-.45	.19	-.43	.24	-.40	.26	-.63	.15
70	70	-.14	-.12	-.23	-.03	-.30	.08	-.33	.13	-.34	.17	-.33	.23	-.31	.24	-.58	.13
75	75	-.10	-.09	-.18	0	-.23	.09	-.25	.13	-.26	.17	-.24	.21	-.24	.20	-.54	.11
80	80	-.07	-.05	-.12	.03	-.16	.10	-.17	.14	-.17	.18	-.16	.21	-.19	.20	-.50	.09
85	85	-.03	-.01	-.07	.04	-.09	.11	-.10	.14	-.10	.16	-.08	.20	-.13	.18	-.44	.05
90	90	.02	.03	0	.07	-.02	.11	-.02	.12	-.02	.15	-.02	.17	-.10	.15	-.40	.01
95	95	.07	.07	.07	.09	.06	.12	.06	.12	-.05	.14	.02	.14	-.06	.10	-.34	-.07
97.5	97.5	.10	.10	.10	.12	-.11	.12	.09	.12	-.08	.12	.05	.10	-.05	.06	-.32	-.13

TABLE II.- PRESSURE DISTRIBUTION FOR THE NACA 64A010 AIRFOIL SECTION WITH A LEADING-EDGE FLAP AND NO TRAILING-EDGE FLAP - Continued

(c) $\delta_N = 30^\circ$

Airfoil section lift coefficient, c_l		-0.01		0.48		0.97		1.27		1.43		1.52		1.58		1.44	
Chordwise station (percent airfoil chord)		Upper	Lower	Upper	Lower	Upper	Lower	Upper	Lower	Upper	Lower	Upper	Lower	Upper	Lower	Upper	Lower
Upper	Lower																
1.7	1.91	-0.60	-0.58	-0.40	-0.29	-0.05	-0.64	0.95	0.73	0.95	1.00	0.77	0.92	0.48	0.84	0.92	0.99
1.75	2.11	-.72	-.58	-.15	-.27	.40	-1.01	.97	.46	.75	.92	.43	1.00	.05	.99	.67	.92
1.49	2.35	-.42	-.58	.30	-.27	.83	-1.01	.91	.31	.36	.81	-.11	.95	-.61	.99	.27	.82
1.47	2.62	.14	-.57	.71	-.27	.99	-.81	.68	.26	-.04	.71	-.54	.86	-1.05	.94	-.13	.71
1.48	2.91	.52	-.57	.90	-.27	.99	-.70	.48	.23	-.26	.65	-.74	.79	-1.21	.88	-.36	.70
1.54	3.45	.80	-.56	.99	-.26	.91	-.37	.31	.25	-.38	.58	-.80	.71	-1.21	.81	-.47	.57
1.72	4.66	.97	-.56	.99	-.26	.78	-.01	.20	.34	-.39	.57	-.72	.66	-1.04	.73	-.45	.57
2.27	5.42	1.02	-.56	.88	-.26	.52	.12	.39	.38	-.51	.57	-.77	.66	-1.00	.71	-.27	.57
2.70	6.88	.97	-.58	.79	-.27	.38	.35	-.18	.48	-.63	.61	-.86	.67	-1.07	.71	-.66	.59
3.59	8.98	.84	-.58	.59	-.27	.13	.51	-.40	.60	-.83	.68	-1.03	.71	-1.21	.75	-.86	.67
5.02	11.03	- - -	-.58	- - -	-.27	- - -	.52	- - -	.71	- - -	.76	- - -	.79	- - -	.82	- - -	.75
6.51	13.82	.37	- - -	.01	- - -	-.57	- - -	-1.12	- - -	-1.55	- - -	-1.67	- - -	-1.82	- - -	-1.49	- - -
7.73	16.5	.07	-.60	-.37	-.29	-1.03	.55	-1.64	.84	-2.09	.90	-2.26	.91	-2.42	.92	-2.05	.90
8.96	- - -	-.72	- - -	-1.36	- - -	2.29	- - -	-3.09	- - -	-3.72	- - -	-3.99	- - -	-4.14	- - -	-3.78	- - -
9.4	- - -	-1.18	- - -	-1.94	- - -	-3.06	- - -	-4.00	- - -	-4.71	- - -	-5.00	- - -	-5.27	- - -	-4.53	- - -
9.9	- - -	-1.48	- - -	-2.31	- - -	-3.48	- - -	-4.47	- - -	-5.29	- - -	-5.61	- - -	-5.79	- - -	-4.98	- - -
10.4	- - -	-1.87	- - -	-2.76	- - -	-4.04	- - -	-5.17	- - -	-6.00	- - -	-6.29	- - -	-6.48	- - -	-5.61	- - -
10.9	- - -	-2.11	- - -	-3.01	- - -	-4.31	- - -	-5.46	- - -	-6.32	- - -	-6.63	- - -	-6.81	- - -	-5.88	- - -
11.48	- - -	-2.22	- - -	-3.21	- - -	-4.39	- - -	-5.50	- - -	-6.32	- - -	-6.63	- - -	-6.77	- - -	-5.88	- - -
12.1	- - -	-1.43	- - -	-2.05	- - -	-2.92	- - -	-3.69	- - -	-4.25	- - -	-4.46	- - -	-4.61	- - -	-4.01	- - -
12.7	- - -	-2.13	- - -	-2.93	- - -	-4.01	- - -	-4.88	- - -	-4.94	- - -	-5.16	- - -	-5.23	- - -	-4.53	- - -
13.35	- - -	-1.98	- - -	-2.82	- - -	-3.75	- - -	-4.31	- - -	-5.59	- - -	-5.82	- - -	-5.94	- - -	-5.14	- - -
14	- - -	-1.72	- - -	-2.30	- - -	-3.14	- - -	-3.86	- - -	-4.36	- - -	-4.53	- - -	-4.61	- - -	-4.08	- - -
17	- - -	-1.05	- - -	-1.44	- - -	-2.00	- - -	-2.49	- - -	-2.83	- - -	-2.96	- - -	-3.05	- - -	-2.64	- - -
20	20	-.86	-.59	-1.20	-.29	-1.65	.62	-2.05	.74	-2.30	.76	-2.39	.78	-2.46	.78	-2.13	.75
25	25	-.73	-.62	-.98	-.29	-1.33	.55	-1.60	.61	-1.79	.66	-1.85	.68	-1.88	.71	-1.64	.64
30	30	-.67	-.64	-.86	-.31	-1.14	.42	-1.36	.51	-1.51	.56	-1.55	.59	-1.58	.62	-1.38	.52
35	35	-.63	-.65	-.80	-.27	-1.03	.33	-1.21	.43	-1.33	.49	-1.36	.53	-1.36	.55	-1.21	.44
40	40	-.60	-.67	-.73	-.18	-.94	.26	-1.08	.35	-1.17	.41	-1.19	.45	-1.20	.48	-1.07	.36
45	45	-.55	-.67	-.66	-.08	-.82	.21	-.94	.31	-1.01	.37	-1.03	.40	-1.01	.43	-.96	.29
50	50	-.50	-.68	-.58	-.01	-.70	.18	-.81	.27	-.87	.33	-.87	.36	-.86	.39	-.87	.25
55	55	-.45	-.58	-.49	-.07	-.60	.16	-.68	.25	-.72	.29	-.72	.33	-.71	.36	-.82	.20
60	60	-.40	-.51	-.44	-.08	-.51	.14	-.57	.22	-.61	.26	-.59	.30	-.58	.33	-.78	.16
65	65	-.34	-.44	-.36	-.08	-.43	.14	-.47	.21	-.49	.25	-.47	.28	-.46	.30	-.75	.13
70	70	-.29	-.37	-.29	-.08	-.34	.14	-.36	.21	-.38	.24	-.36	.26	-.35	.28	-.71	.11
75	75	-.24	-.29	-.23	-.08	-.25	.13	-.26	.20	-.28	.22	-.26	.24	-.25	.26	-.68	.08
80	80	-.20	-.22	-.16	-.08	-.18	.14	-.18	.18	-.18	.20	-.17	.22	-.17	.23	-.65	.04
85	85	-.16	-.16	-.11	.09	-.09	.13	-.10	.17	-.11	.18	-.10	.20	-.10	.21	-.61	.01
90	90	-.12	-.12	-.04	.10	-.09	.13	-.02	.16	-.04	.16	-.04	.17	-.05	.18	-.55	-.05
95	95	-.08	-.08	.03	.10	.06	.12	.05	.13	-.01	.13	.01	.13	-.01	.13	-.49	-.15
97.5	97.5	-.05	-.05	.08	.10	.09	.12	.08	.11	.04	.10	.03	.11	0	.09	-.45	-.23

NACA

TABLE II.- PRESSURE DISTRIBUTION FOR THE NACA 64A010 AIRFOIL SECTION WITH A LEADING-EDGE FLAP AND NO TRAILING-EDGE FLAP - Concluded

(d) $\delta_N = 45^\circ$

Airfoil section lift coefficient, c_l		0.11		0.59		1.01		1.38		1.55		1.62		1.66		0.92	
Chordwise station (percent airfoil chord)		Upper	Lower	Upper	Lower	Upper	Lower	Upper	Lower	Upper	Lower	Upper	Lower	Upper	Lower	Upper	Lower
Upper	Lower																
0.10	0.27	-0.56	-0.68	0.03	-0.62	0.84	0.99	-0.86	-0.01	-2.61	-1.27	-3.60	-2.03	-4.32	-2.75	1.01	0.37
.02	.45	-.18	-.53	.49	-1.12	.74	.85	-1.58	.65	-3.53	-.14	-4.61	-.60	-5.58	-1.07	-.93	.80
.01	.67	.36	-.53	.91	-1.20	.36	.71	-2.66	.89	-4.91	.44	-6.14	.15	-7.17	-.17	-1.83	.95
.05	.94	.79	-.54	1.01	-1.04	-.04	.59	-3.08	1.01	-5.27	.88	-6.29	.68	-7.20	.51	-2.26	.98
.13	1.24	.95	-.54	.96	.93	-.26	.51	-3.01	1.01	-4.80	.96	-5.77	.88	-6.60	.79	-2.26	.95
.27	1.8	1.00	-.52	.84	-.77	-.41	.42	-2.72	.95	-4.41	1.01	-5.25	1.01	-5.64	.97	-2.05	.88
.57	.31	.97	-.52	.69	-.34	-.40	.39	-2.15	.84	-3.02	.95	-3.57	.98	-3.99	1.00	-1.65	.75
1.42	3.95	.81	-.52	.43	-.23	-.49	.37	-1.74	.79	-2.45	.90	-2.82	.94	-3.09	.97	-1.27	.70
2.03	5.6	.71	-.52	.29	-.05	-.59	.40	-1.70	.74	-2.33	.85	-2.65	.88	-2.87	.92	-1.23	.66
3.27	8.0	.53	-.52	.08	.16	-.72	.47	-1.69	.73	-2.21	.81	-2.48	.84	-2.66	.87	-1.20	.66
5.2	10.4	- - -	-.53	- - -	.34	- - -	.55	- - -	.74	- - -	.80	- - -	.84	- - -	.86	- - -	.67
7.8	13.6	.04	- - -	-.47	- - -	-1.21	- - -	-1.94	- - -	-2.34	- - -	-2.55	- - -	-2.66	- - -	-1.28	- - -
8.8	16.5	-.25	-.56	-.81	.56	-1.58	.72	-2.39	.83	-2.80	.87	-3.01	.88	-3.12	.89	-1.52	.78
10.4	- - -	-1.15	- - -	-1.94	- - -	-2.91	- - -	-4.03	- - -	- - -	- - -	-4.81	- - -	-4.90	- - -	-2.42	- - -
10.9	- - -	-1.49	- - -	-2.32	- - -	-3.46	- - -	-4.63	- - -	-5.31	- - -	-5.18	- - -	-5.37	- - -	-2.78	- - -
11.48	- - -	-1.69	- - -	-2.58	- - -	-3.71	- - -	-4.90	- - -	-5.58	- - -	-5.73	- - -	-5.83	- - -	-2.77	- - -
12.1	- - -	-1.08	- - -	-1.70	- - -	-2.53	- - -	-3.39	- - -	-3.82	- - -	-4.02	- - -	-4.11	- - -	-1.63	- - -
12.7	- - -	-1.72	- - -	-2.58	- - -	-3.57	- - -	-4.59	- - -	-4.63	- - -	-4.75	- - -	-4.77	- - -	-2.09	- - -
13.35	- - -	-1.58	- - -	-2.39	- - -	-3.22	- - -	-4.12	- - -	-5.17	- - -	-5.31	- - -	-5.38	- - -	-1.63	- - -
14	- - -	-1.48	- - -	-2.06	- - -	-2.87	- - -	-3.72	- - -	-4.09	- - -	-4.29	- - -	-4.33	- - -	-1.44	- - -
17	- - -	-.85	- - -	-1.30	- - -	-1.87	- - -	-2.99	- - -	-2.76	- - -	-2.90	- - -	-2.94	- - -	-1.24	- - -
20	20	-.72	-.58	-1.10	.42	-1.56	.55	-2.05	.70	-2.28	.75	-2.39	.77	-2.43	.79	-1.21	.63
25	25	-.62	-.58	-.92	.27	-1.28	.44	-1.63	.61	-1.79	.67	-1.88	.69	-1.90	.71	-1.18	.51
30	30	-.57	-.53	-.82	.17	-1.12	.35	-1.39	.52	-1.51	.58	-1.57	.60	-1.57	.63	-1.15	.40
35	35	-.55	-.53	-.76	.10	-1.01	.28	-1.16	.45	-1.32	.51	-1.36	.54	-1.35	.56	-1.12	.32
40	40	-.53	-.31	-.71	.05	-.92	.22	-1.09	.39	-1.15	.45	-1.19	.47	-1.16	.50	-1.11	.22
45	45	-.49	-.21	-.63	.03	-.81	.18	-.94	.34	-.99	.40	-1.01	.42	-.98	.45	-1.09	.16
50	50	-.44	-.13	-.55	.01	-.70	.16	-.81	.31	-.84	.37	-.86	.38	-.82	.40	-1.08	.11
55	55	-.38	-.91	-.47	.01	-.60	.15	-.68	.28	-.70	.33	-.71	.35	-.67	.37	-1.06	.07
60	60	-.34	-.07	-.41	.01	-.51	.13	-.52	.26	-.58	.30	-.58	.31	-.54	.33	-1.04	-.02
65	65	-.29	-.05	-.34	.03	-.69	.13	-.46	.25	-.46	.28	-.46	.29	-.42	.31	-1.01	-.01
70	70	-.23	-.03	-.27	.04	-.33	.13	-.36	.23	-.35	.26	-.35	.27	-.32	.29	-.99	-.05
75	75	-.18	-.20	-.21	.05	-.25	.13	-.26	.21	-.25	.24	-.26	.25	-.24	.27	-.96	-.09
80	80	-.14	0	-.14	.07	-.17	.14	-.17	.20	-.17	.24	-.17	.24	-.17	.24	-.93	-.13
85	85	-.10	.01	-.08	.08	-.10	.14	-.09	.19	-.10	.21	-.11	.20	-.12	.21	-.90	-.18
90	90	-.05	.26	-.01	.09	-.02	.13	-.01	.17	-.03	.18	-.06	.17	-.08	.17	-.85	-.26
95	95	0	.45	.65	.10	.06	.13	.05	.14	.01	.14	.02	.12	-.05	.12	-.79	-.38
97.5	97.5	.39	.65	.10	.12	.10	.13	.07	.12	.03	.10	.01	.08	.05	.07	-.76	-.49

TABLE III.- PRESSURE DISTRIBUTION FOR THE NACA 64A010 AIRFOIL SECTION WITH A LEADING-EDGE FLAP AND SPLIT FLAP DEFLECTED 60°

(a) $\delta_N = 0^\circ$

Airfoil section lift coefficient, c_l	0.54		0.96		1.37		1.56		1.67		1.81		1.87		1.83	
Chordwise Station (Percent airfoil chord)	Upper	Lower	Upper	Lower	Upper	Lower	Upper	Lower	Upper	Lower	Upper	Lower	Upper	Lower	Upper	Lower
0	0.83	- - -	0.28	- - -	-3.61	- - -	-6.62	- - -	-8.57	- - -	-10.64	- - -	-4.35	- - -	-3.50	- - -
.05	.95	0.44	-.25	0.77	-4.59	-2.03	-7.73	-4.38	-9.74	-6.02	-11.87	-7.69	-4.73	-3.15	-3.58	-2.51
.15	.96	-.01	-1.04	.99	-5.91	-.56	-9.46	-2.14	-11.59	-3.33	-13.98	-4.43	-4.96	-1.47	-3.61	-1.18
.3	.77	-.23	-1.50	1.00	-5.96	.17	-9.06	-.89	-10.91	-1.71	-12.98	-2.49	-4.47	-.53	-3.27	-.36
.5	.58	-.31	-1.58	.93	-5.43	.71	-8.46	.14	-10.15	-.33	-11.64	-.79	-3.99	.27	-2.99	.35
.75	.42	-.38	-1.46	.84	-4.76	.92	-6.12	.57	-7.19	.27	-8.37	-.03	-3.46	.62	-2.78	.66
1.25	.31	-.38	-1.21	.70	-3.22	1.00	-4.44	.91	-5.19	.79	-5.98	.65	-3.03	.91	-2.46	.92
2.5	.16	-.31	-.90	.51	-2.35	.93	-3.13	1.00	-3.64	1.01	-4.09	.93	-2.10	1.00	-1.84	1.00
3.33	.09	-.30	-.86	.43	-2.10	.87	-2.77	.97	-3.18	1.00	-3.57	1.01	-2.04	.97	-1.79	.97
5	-.01	-.28	-.80	.34	-1.79	.76	-2.30	.89	-2.62	.94	-2.92	.97	-2.00	.91	-1.77	.91
7.5	- - -	-.22	- - -	.29	- - -	.65	- - -	.79	- - -	.84	- - -	.90	- - -	.82	- - -	.82
10	-.14	-.20	-.70	.24	-1.35	.58	-1.66	.70	-1.87	.77	-2.06	.82	-2.05	.73	-1.82	.74
12	-.20	- - -	-.73	- - -	-1.31	- - -	-1.60	- - -	-1.78	- - -	-1.94	- - -	-2.08	- - -	-1.84	- - -
14	-.26	- - -	-.77	- - -	-1.31	- - -	-1.55	- - -	-1.71	- - -	-1.86	- - -	-2.12	- - -	-1.88	- - -
16.5	- - -	-.10	- - -	.21	- - -	.47	- - -	.58	- - -	.64	- - -	.67	- - -	.62	- - -	.61
17	-.30	- - -	-.76	- - -	-1.26	- - -	-1.48	- - -	-1.62	- - -	-1.77	- - -	-2.05	- - -	-1.82	- - -
20	-.34	-.09	-.76	.17	-1.20	.41	-1.42	.50	-1.54	.56	-1.67	.60	-2.08	.55	-1.84	.53
25	-.40	-.05	-.78	.18	-1.15	.40	-1.33	.49	-1.44	.55	-1.54	.58	-2.07	.53	-1.87	.52
30	-.44	0	-.79	.20	-1.12	.38	-1.27	.47	-1.36	.52	-1.45	.56	-2.03	.50	-1.86	.49
35	-.50	.05	-.82	.22	-1.11	.39	-1.23	.47	-1.33	.51	-1.40	.54	-1.95	.49	-1.83	.48
40	-.55	.12	-.84	.26	-1.11	.41	-1.21	.47	-1.29	.51	-1.35	.53	-1.84	.49	-1.79	.48
45	-.56	.22	-.82	.32	-1.06	.44	-1.16	.49	-1.21	.53	-1.28	.56	-1.73	.51	-1.74	.51
50	-.57	.33	-.80	.41	-1.01	.50	-1.09	.55	-1.14	.57	-1.19	.58	-1.62	.55	-1.68	.55
55	-.56	.46	-.78	.50	-.95	.57	-1.01	.60	-1.07	.62	-1.11	.63	-1.51	.61	-1.60	.60
60	-.57	.51	-.76	.59	-.92	.65	-.97	.68	-1.01	.69	-1.05	.70	-1.40	.68	-1.53	.67
65	-.57	.52	-.74	.62	-.88	.71	-.91	.73	-.95	.75	-.97	.77	-1.30	.74	-1.46	.74
70	-.57	.51	-.71	.62	-.82	.71	-.86	.74	-.88	.76	-.91	.78	-1.21	.75	-1.38	.74
75	-.56	.27	-.70	.34	-.78	.41	-.81	.44	-.83	.47	-.86	.48	-1.13	.42	-1.31	.43
80	-.58	-1.02	-.70	-1.00	-.76	-.94	-.78	-.90	-.79	-.88	-.80	-.87	-1.06	-.76	-1.23	-.84
85	-.61	-1.03	-.71	-1.01	-.76	-.95	-.75	-.91	-.77	-.88	-.78	-.88	-.99	-.76	-1.16	-.84
90	-.66	-1.04	-.74	-1.01	-.76	-.96	-.75	-.92	-.76	-.90	-.77	-.88	-.93	-.77	-1.08	-.86
95	-.77	-1.05	-.82	-1.02	-.82	-.97	-.79	-.92	-.79	-.90	-.80	-.89	-.87	-.78	-1.04	-.86
97.5	-.83	-1.05	-.86	-1.03	-.85	-.97	-.82	-.92	-.82	-.91	-.82	-.90	-.84	-.78	-1.03	-.88

TABLE III.- PRESSURE DISTRIBUTION FOR THE NACA 64A010 AIRFOIL SECTION WITH A LEADING-EDGE FLAP AND SPLIT FLAP DEFLECTED 60° - Continued

(b) $\delta_N = 15°$

Airfoil section lift coefficient, c_l		0.71		1.12		1.52		1.73		1.91		2.08		2.17		2.25	
Chordwise station (Percent airfoil chord)		Upper	Lower	Upper	Lower	Upper	Lower	Upper	Lower	Upper	Lower	Upper	Lower	Upper	Lower	Upper	Lower
Upper	Lower																
-0.48	-0.36	-0.42	-1.22	0.99	0.92	-0.69	0.14	-2.79	-1.40	-5.60	-3.57	-9.02	-6.35	-10.87	-7.89	-13.20	-9.75
-.49	-.22	.18	-1.78	.98	.69	-1.40	.73	-3.71	-.19	-6.71	-1.61	-10.24	-3.48	-12.16	-4.61	-14.57	-5.86
-.44	-.03	.75	-1.82	.60	.52	-2.42	.94	-5.15	.41	-8.39	-.54	-12.26	-1.86	-14.31	-2.64	-17.00	-3.47
-.35	.22	.98	-1.58	.26	.39	-2.82	1.00	-5.39	.81	-7.60	-.33	-11.67	-.43	-13.49	-.90	-15.88	-1.40
-.20	.50	1.00	-1.42	.04	.30	-2.78	.99	-4.90	.95	-5.89	-.68	-10.81	.20	-11.98	-.12	-13.36	-.46
-.02	1.05	.93	-1.17	-.13	.23	-2.52	.92	-4.44	1.00	-4.35	.94	-7.85	.73	-8.90	.58	-10.29	.41
.42	2.38	.81	-.65	-.16	.20	-1.96	.78	-3.03	.94	-4.30	.99	-5.75	.99	-6.45	.97	-7.38	.93
1.50	3.24	.57	-.54	-.27	.19	-1.75	.72	-2.35	.88	-3.22	.97	-4.14	1.00	-4.62	1.01	-5.23	1.00
2.25	4.96	.45	-.35	-.35	.22	-1.49	.65	-2.19	.81	-2.94	.92	-3.72	.97	-4.14	1.00	-4.58	1.01
3.75	7.5	.26	-.13	-.46	.27	-1.38	.62	-2.01	.74	-2.61	.85	-3.23	.92	-3.57	.95	-3.92	.97
6.04	10.01	- - -	0	- - -	.32	- - -	.60	- - -	.72	- - -	.81	- - -	.88	- - -	.91	- - -	.94
8.36	13.51	-.13	- - -	-.78	- - -	-1.52	- - -	-1.93	- - -	-2.35	- - -	-2.77	- - -	-3.00	- - -	-3.24	- - -
10.22	16.5	-.37	.28	-1.03	.48	-1.79	.66	-2.20	.73	-2.61	.80	-3.01	-.84	-3.23	.88	-3.46	.90
12.08	- - -	-.59	- - -	-1.11	- - -	-1.74	- - -	-2.07	- - -	-2.42	- - -	-2.75	- - -	-2.91	- - -	-3.09	- - -
12.71	- - -	-1.13	- - -	-1.93	- - -	-2.81	- - -	-3.30	- - -	-2.74	- - -	-4.18	- - -	-4.39	- - -	-4.61	- - -
13.35	- - -	-1.08	- - -	-1.83	- - -	-2.66	- - -	-3.10	- - -	-2.53	- - -	-3.95	- - -	-2.85	- - -	-4.36	- - -
14	- - -	-1.01	- - -	-1.72	- - -	-2.51	- - -	-2.92	- - -	-3.32	- - -	-3.72	- - -	-4.90	- - -	-4.09	- - -
17	- - -	-.68	- - -	-1.20	- - -	-1.83	- - -	-2.14	- - -	-2.44	- - -	-2.74	- - -	-2.88	- - -	-3.03	- - -
20	20	-.64	.14	-1.09	.35	-1.62	.55	-1.88	.63	-2.14	.69	-2.38	.75	-2.51	.78	-2.64	.81
25	25	-.63	.15	-1.03	.33	-1.44	.52	-1.65	.60	-2.85	.57	-2.04	.73	-2.14	.77	-2.25	.79
30	30	-.65	.15	-.99	.31	-1.35	.49	-1.52	.56	-1.69	.63	-1.84	.69	-1.93	.72	-2.01	.75
35	35	-.68	.17	-1.03	.32	-1.30	.47	-1.44	.55	-1.58	.60	-1.71	.66	-1.78	.70	-1.85	.73
40	40	-.71	.21	-.97	.33	-1.25	.47	-1.37	.54	-1.50	.59	-1.60	.64	-1.65	.68	-1.71	.70
45	45	-.70	.28	-.94	.39	-1.18	.51	-1.29	.55	-1.39	.60	-1.48	.65	-1.52	.68	-1.57	.70
50	50	-.69	.37	-.91	.45	-1.11	.55	-1.20	.59	-1.28	.63	-1.36	.66	-1.39	.69	-1.43	.71
55	55	-.67	.47	-.86	.54	-1.04	.60	-1.11	.64	-1.18	.67	-1.25	.70	-1.26	.71	-1.29	.73
60	60	-.67	.55	-.84	.63	-.99	.58	-1.05	.70	-1.10	.73	-1.14	.74	-1.17	.75	-1.20	.77
65	65	-.66	.58	-.80	.66	-.92	.74	-.97	.77	-1.01	.79	-1.05	.81	-1.07	.82	-1.09	.83
70	70	-.64	.58	-.77	.66	-.87	.75	-.91	.78	-.94	.80	-.97	.83	-.97	.84	-.99	.86
75	75	-.63	.12	-.73	.32	-.82	.40	-.85	.45	-.86	.47	-.90	.50	-.89	.81	-.90	.52
80	80	-.63	-1.00	-.71	-.96	-.78	-.90	-.80	-.85	-.81	-.81	-.83	-.77	-.83	-.74	-.83	-.71
85	85	-.65	-1.01	-.72	-.97	-.77	-.90	-.77	-.86	-.78	-.82	-.78	-.79	-.78	-.75	-.78	-.73
90	90	-.68	-1.02	-.74	-.99	-.76	-.91	-.75	-.86	-.76	-.82	-.75	-.79	-.75	-.75	-.74	-.73
95	95	-.78	-1.03	-.80	-.99	-.79	-.91	-.78	-.86	-.77	-.82	-.76	-.79	-.74	-.77	-.73	-.74
97.5	97.5	-.84	-1.03	-.84	-.99	-.82	-.92	-.79	-.87	-.77	-.83	-.77	-.81	-.74	-.78	-.73	-.75

TABLE III.- PRESSURE DISTRIBUTION FOR THE NACA 64A010 AIRFOIL SECTION WITH A LEADING-EDGE FLAP AND SPLIT FLAP DEFLECTED 60° - Continued

(c) $\delta_N = 30°$

Airfoil section lift coefficient, c_l		1.28		1.66		2.03		2.20		2.35		2.44		2.51		2.57	
Chordwise station (Percent airfoil chord)		Upper	Lower	Upper	Lower	Upper	Lower	Upper	Lower	Upper	Lower	Upper	Lower	Upper	Lower	Upper	Lower
Upper	Lower																
0.10	0.27	0.56	0.10	0.77	0.97	-1.86	-0.75	-4.10	-2.97	-6.88	-4.69	-8.62	-6.10	-11.04	-7.32	-12.18	-8.92
.02	.45	.81	-.30	.44	.99	-2.68	.19	-5.12	-.91	-8.00	-2.41	-9.81	-3.29	-12.27	-4.15	-13.51	-5.33
.014	.67	.99	-.41	-.10	.94	-3.88	.62	-6.14	-.09	-9.82	-1.12	-11.81	-1.73	-14.46	-2.34	-15.94	-3.07
.05	.94	.96	-.36	-.53	.84	-4.19	.90	-6.71	.55	-9.54	-.03	-11.29	-.39	-13.73	-.76	-15.03	-1.20
.13	1.24	.84	-.32	-.73	.76	-3.96	.99	-6.16	.80	-8.86	.44	-10.58	.21	-12.06	-.04	-13.72	-.33
.27	1.8	.70	-.21	-.79	.67	-3.58	1.01	-5.44	.98	-6.64	.83	-7.71	.72	-8.69	.60	-9.90	.46
.57	3.1	.54	.04	-.70	.60	-2.52	.95	-3.73	1.00	-5.02	1.01	-5.77	.98	-6.44	.96	-7.28	.92
1.42	3.95	.30	.09	-.71	.58	-2.14	.91	-2.94	.97	-3.84	1.01	-4.24	1.01	-4.68	1.00	-5.31	.99
2.03	5.6	.17	.22	-.79	.58	-2.06	.86	-2.77	.94	-3.52	.99	-3.88	.99	-4.28	1.00	-4.71	1.01
3.27	8.0	-.05	.37	-.92	.63	-2.02	.84	-2.61	.90	-3.24	.96	-3.52	.97	-3.84	.98	-4.20	1.00
5.2	10.4	- - -	.50	- - -	.68	- - -	.84	- - -	.89	- - -	.93	- - -	.96	- - -	.96	- - -	.99
7.2	13.6	-.62	- - -	-1.43	- - -	-2.30	- - -	-2.73	- - -	-3.20	- - -	-3.41	- - -	-3.65	- - -	-3.90	- - -
8.8	16.5	-1.01	.69	-1.87	.81	-2.81	.90	-3.27	.92	-3.74	.95	-3.95	.96	-4.19	.96	-4.44	.98
10.4	- - -	-2.24	- - -	-3.38	- - -	-4.66	- - -	-5.27	- - -	-5.83	- - -	-6.17	- - -	-6.48	- - -	-6.90	- - -
10.9	- - -	-2.75	- - -	-4.02	- - -	-5.47	- - -	-6.08	- - -	-6.65	- - -	-7.04	- - -	-7.34	- - -	-7.78	- - -
11.48	- - -	-3.01	- - -	-4.31	- - -	-5.82	- - -	-6.41	- - -	-6.98	- - -	-7.38	- - -	-7.69	- - -	-8.14	- - -
12.1	- - -	-2.19	- - -	-3.08	- - -	-4.13	- - -	-4.66	- - -	-5.20	- - -	-5.38	- - -	-8.64	- - -	-5.98	- - -
12.7	- - -	-2.99	- - -	-4.19	- - -	-5.00	- - -	-5.40	- - -	-5.86	- - -	-7.15	- - -	-6.38	- - -	-6.72	- - -
13.35	- - -	-2.79	- - -	-3.77	- - -	-5.51	- - -	-6.02	- - -	-6.48	- - -	-6.84	- - -	-7.12	- - -	-7.49	- - -
14	- - -	-2.52	- - -	-3.44	- - -	-4.44	- - -	-4.91	- - -	-5.29	- - -	-5.56	- - -	-8.77	- - -	-6.06	- - -
17	- - -	-1.63	- - -	-2.33	- - -	-3.07	- - -	-3.38	- - -	-3.69	- - -	-3.81	- - -	-3.95	- - -	-4.09	- - -
20	20	-1.42	.54	-1.99	.68	-2.58	.78	-2.84	.82	-3.11	.86	-3.21	.86	-3.35	.87	-3.47	.90
25	25	-1.25	.50	-1.70	.62	-2.14	.75	-2.34	.80	-2.53	.84	-2.62	.86	-2.73	.87	-2.84	.90
30	30	-1.17	.45	-1.55	.58	-1.91	.71	-2.06	.75	-2.21	.80	-2.07	.82	-2.35	.83	-2.44	.85
35	35	-1.14	.43	-1.45	.56	-1.76	.67	-1.87	.72	-1.99	.77	-2.03	.79	-2.10	.81	-2.16	.83
40	40	-1.11	.43	-1.39	.55	-1.64	.66	-1.73	.70	-1.82	.74	-1.85	.76	-1.89	.77	-1.93	.81
45	45	-1.05	.47	-1.30	.56	-1.50	.66	-1.57	.70	-1.65	.74	-1.66	.75	-1.70	.77	-1.71	.79
50	50	-.99	.50	-1.20	.60	-1.38	.67	-1.43	.70	-1.48	.74	-1.49	.75	-1.52	.77	-1.53	.79
55	55	-.93	.57	-1.11	.64	-1.25	.71	-1.29	.73	-1.34	.76	-1.34	.77	-1.36	.78	-1.36	.81
60	60	-.89	.65	-1.05	.70	-1.16	.75	-1.19	.77	-1.22	.79	-1.21	.80	-1.23	.81	-1.22	.83
65	65	-.84	.71	-.97	.77	-1.06	.82	-1.08	.83	-1.10	.84	-1.09	.85	-1.10	.85	-1.08	.87
70	70	-.79	.72	-.90	.78	-.97	.84	-.98	.86	-.99	.88	-.98	.89	-.99	.90	-.97	.91
75	75	-.75	.34	-.83	.43	-.89	.48	-.89	.51	-.90	.53	-.89	.54	-.89	.54	-.87	.55
80	80	-.73	-.89	-.79	-.83	-.82	-.76	-.82	-.71	-.82	-.66	-.81	-.62	-.81	-.58	-.79	-.53
85	85	-.72	-.90	-.77	-.84	-.78	-.77	-.77	-.73	-.77	-.67	-.75	-.63	-.74	-.59	-.71	-.53
90	90	-.72	-.90	-.74	-.86	-.75	-.78	-.73	-.73	-.72	-.68	-.70	-.63	-.69	-.59	-.65	-.53
95	95	-.77	-.91	-.77	-.86	-.75	-.78	-.73	-.73	-.70	-.69	-.67	-.63	-.65	-.60	-.60	-.54
97.5	97.5	-.80	-.92	-.78	-.86	-.75	-.79	-.72	-.74	-.69	-.70	-.66	-.65	-.63	-.61	-.57	-.55

TABLE III.- PRESSURE DISTRIBUTION FOR THE NACA 64A010 AIRFOIL SECTION WITH A LEADING-EDGE FLAP AND SPLIT FLAP DEFLECTED 60° - Concluded

(d) $\delta_N = 45^\circ$

Airfoil section lift coefficient, c_l		1.30		1.64		1.92		2.10		2.27		2.33		2.35		1.69	
Chordwise station (percent airfoil chord)		Upper	Lower	Upper	Lower	Upper	Lower	Upper	Lower	Upper	Lower	Upper	Lower	Upper	Lower	Upper	Lower
Upper	Lower																
1.7	1.91	0.35	0.19	0.47	0.06	0.99	0.95	0.63	0.91	-0.32	-0.32	-0.96	-0.13	-1.30	-0.37	0.99	0.98
1.55	2.11	.56	.27	.73	-.26	.90	.82	.27	1.00	-.88	.77	-1.62	.51	-1.98	.37	.86	.86
1.49	2.35	.84	.27	.97	-.32	.66	.71	-.29	.99	-1.73	.94	-2.60	.79	-3.02	.71	.61	.75
1.47	2.62	.97	.27	.99	-.21	.35	.64	-.68	.94	-2.11	1.00	-2.68	.96	-3.34	.93	.31	.67
1.48	2.91	1.00	.27	.93	-.14	.16	.59	-.84	.90	-2.13	1.00	-2.84	1.00	-3.19	.99	.11	.62
1.54	3.45	.97	.27	.81	-.04	.01	.56	-.87	.83	-1.97	.97	-2.57	1.00	-2.88	1.00	-.01	.59
1.72	4.66	.88	.27	.67	.28	-.05	.59	-.75	.78	-1.66	.90	-2.01	.94	-2.14	.96	-.04	.60
2.27	5.42	.69	.27	.42	.36	-.22	.60	-.77	.77	-1.37	.88	-1.70	.92	-1.84	.94	-.16	.61
2.70	6.88	.56	.27	.27	.51	-.34	.64	-.86	.78	-1.41	.86	-1.70	.90	-1.82	.91	-.27	.65
3.59	8.98	.35	.27	.03	.67	-.56	.73	-1.03	.81	-1.53	.87	-1.77	.90	-1.89	.91	-.43	.74
5.02	11.03	- - -	.26	- - -	.68	- - -	.81	- - -	.86	- - -	.89	- - -	.91	- - -	.92	- - -	.80
6.51	13.82	-.33	- - -	-.71	- - -	-1.31	- - -	-1.70	- - -	-2.12	- - -	-2.32	- - -	-2.43	- - -	-.91	- - -
7.73	16.5	-.79	.24	-1.23	.68	-1.90	.91	-2.36	.95	-1.53	.96	-2.61	.96	-2.65	.96	-1.27	.92
8.96	- - -	-1.97	- - -	-2.59	- - -	-3.55	- - -	-4.21	- - -	-4.94	- - -	-5.30	- - -	-5.42	- - -	-2.24	- - -
9.40	- - -	-2.71	- - -	-3.94	- - -	-3.54	- - -	-5.49	- - -	-6.15	- - -	-6.32	- - -	-6.65	- - -	-2.78	- - -
9.9	- - -	-3.14	- - -	-3.90	- - -	-5.11	- - -	-6.05	- - -	-6.77	- - -	-7.11	- - -	-7.27	- - -	-2.94	- - -
10.4	- - -	-3.70	- - -	-4.55	- - -	-5.85	- - -	-6.86	- - -	-7.57	- - -	-7.96	- - -	-8.09	- - -	-3.10	- - -
10.9	- - -	-4.01	- - -	-4.89	- - -	-6.21	- - -	-7.21	- - -	-7.94	- - -	-8.34	- - -	-8.46	- - -	-2.97	- - -
11.48	- - -	-4.12	- - -	-4.98	- - -	-6.27	- - -	-7.25	- - -	-7.92	- - -	-8.31	- - -	-8.42	- - -	-2.53	- - -
12.1	- - -	-2.89	- - -	-3.53	- - -	-4.44	- - -	-5.21	- - -	-5.73	- - -	-6.00	- - -	-6.07	- - -	-1.29	- - -
12.7	- - -	-3.86	- - -	-4.58	- - -	-5.02	- - -	-5.74	- - -	-6.21	- - -	-6.46	- - -	-6.51	- - -	-1.37	- - -
13.35	- - -	-3.49	- - -	-4.08	- - -	-4.99	- - -	-6.49	- - -	-7.00	- - -	-7.29	- - -	-7.38	- - -	-1.31	- - -
14	- - -	-3.06	- - -	-3.68	- - -	-3.49	- - -	-5.17	- - -	-4.94	- - -	-5.75	- - -	-5.90	- - -	-1.31	- - -
17	- - -	-2.01	- - -	-2.45	- - -	-3.00	- - -	-3.36	- - -	-3.76	- - -	-3.92	- - -	-4.00	- - -	-1.30	- - -
20	20	-1.72	.20	-2.06	.68	-2.50	.80	-2.79	.83	-3.12	.85	-3.25	.87	-3.32	.87	-1.33	.79
25	25	-1.47	.23	-1.73	.70	-2.07	.75	-2.26	.79	-2.49	.84	-2.58	.85	-2.62	.86	-1.33	.74
30	30	-1.35	.25	-1.57	.62	-1.83	.69	-1.99	.74	-2.16	.79	-2.22	.81	-2.62	.82	-1.34	.67
35	35	-1.27	.32	-1.47	.58	-1.70	.65	-1.82	.71	-1.96	.75	-2.00	.77	-2.03	.78	-1.35	.63
40	40	-1.22	.39	-1.40	.56	-1.58	.62	-1.69	.69	-1.79	.72	-1.83	.74	-1.85	.75	-1.37	.60
45	45	-1.14	.44	-1.30	.57	-1.46	.64	-1.53	.69	-1.62	.72	-1.64	.74	-1.67	.75	-1.37	.60
50	50	-1.07	.48	-1.20	.59	-1.34	.65	-1.40	.69	-1.46	.72	-1.48	.74	-1.49	.75	-1.39	.61
55	55	-.99	.50	-1.11	.65	-1.21	.68	-1.26	.71	-1.32	.75	-1.33	.75	-1.34	.77	-1.40	.64
60	60	-.94	.53	-1.05	.68	-1.13	.73	-1.17	.76	-1.20	.78	-1.21	.79	-1.21	.79	-1.42	.69
65	65	-.87	.54	-.97	.75	-1.04	.79	-1.05	.83	-1.09	.84	-1.09	.84	-1.09	.84	-1.42	.77
70	70	-.81	.56	-.90	.79	-.95	.82	-.97	.84	-.96	.86	-.98	.87	-.97	.88	-1.43	.80
75	75	-.76	.14	-.84	.33	-.87	.47	-.88	.52	-.89	.53	-.88	.53	-.88	.53	-1.43	.48
80	80	-.73	-.77	-.79	-.84	-.82	-.78	-.81	-.71	-.81	-.63	-.81	-.59	-.80	-.57	-1.44	-1.12
85	85	-.70	-.77	-.76	-.84	-.78	-.79	-.77	-.73	-.75	-.64	-.74	-.60	-.74	-.58	-1.45	-1.14
90	90	-.69	-.78	-.74	-.84	-.74	-.79	-.73	-.73	-.70	-.63	-.68	-.60	-.67	-.58	-1.46	-1.15
95	95	-.71	-.79	-.77	-.85	-.75	-.79	-.71	-.73	-.67	-.63	-.64	-.60	-.63	-.58	-1.51	-1.17
97.5	97.5	-.71	-.79	-.78	-.85	-.75	-.80	-.71	-.74	-.66	-.63	-.62	-.60	-.61	-.58	-1.56	-1.20

TABLE IV.- PRESSURE DISTRIBUTION FOR THE NACA 64A010 AIRFOIL SECTION WITH A LEADING-EDGE FLAP AND A DOUBLE-SLOTTED FLAP DEFLECTED 52.7°

(a) $\delta_N = 0°$

Airfoil section lift coefficient, c_l	1.04		1.46		1.82		2.01		2.18		2.45		2.36		2.85	
Chordwise Station (Percent airfoil chord)	Upper	Lower	Upper	Lower	Upper	Lower	Upper	Lower	Upper	Lower	Upper	Lower	Upper	Lower	Upper	Lower
Main Airfoil																
0	-0.24	- - -	0.97	- - -	-0.69	- - -	-2.72	- - -	-3.46	- - -	-6.98	- - -	-9.76	- - -	-5.83	- - -
.25	.35	-1.01	.83	0.97	-1.33	0.10	-3.89	-1.40	-6.85	-3.49	-8.22	-4.73	-11.53	-6.97	-5.92	-3.77
.5	.84	-1.61	.44	.79	-2.31	.71	-5.18	-.16	-8.16	-1.93	-9.88	-2.35	-10.95	-3.92	-5.64	-1.97
1	1.01	-1.72	.05	.62	-2.90	.93	-5.37	.43	-7.96	-.46	-9.46	-1.05	-10.14	-2.13	-5.39	-.86
2	.59	-1.78	-.17	.46	-2.79	1.00	-4.90	.83	-7.33	.38	-8.87	.06	-11.31	-.59	-4.98	.08
3	.89	-1.42	-.88	.35	-2.46	.98	-4.49	.97	-5.94	.73	-6.39	.28	-7.95	.11	-4.69	.51
1.25	.76	-1.21	-.85	.23	-1.82	.90	-2.86	1.00	-4.11	.97	-4.69	.92	-5.73	.70	-4.16	.86
2.5	.56	-.77	-.89	.16	-1.40	.73	-2.15	.91	-2.93	1.00	-3.33	1.01	-3.99	.99	-3.59	1.00
3.33	.46	-.71	-.33	.12	-1.31	.65	-1.94	.84	-2.82	.95	-2.95	.98	-3.50	1.00	-3.29	.99
5	.31	-.58	-.36	.08	-1.18	.77	-1.69	.73	-2.22	.87	-2.48	.91	-2.92	.95	-3.31	.93
7.5	.18	-.49	-.42	.09	-1.06	.47	-1.46	.65	-1.88	.76	-2.07	.82	-2.41	.88	-3.41	.82
10	.09	-.35	-.46	.08	-.98	.49	-1.31	.56	-1.67	.68	-1.85	.73	-2.10	.80	-3.18	.76
12.5	- - -	-.28	- - -	.07	- - -	.34	- - -	.48	- - -	.59	- - -	.64	- - -	.72	- - -	.68
15	-.09	- - -	-.33	- - -	-1.03	- - -	-1.32	- - -	-1.60	- - -	-1.72	- - -	-1.95	- - -	-2.82	- - -
16.5	- - -	-.20	- - -	.12	- - -	.36	- - -	.46	- - -	.57	- - -	.62	- - -	.69	- - -	.66
17	-.16	- - -	-.39	- - -	-1.04	- - -	-1.30	- - -	-1.57	- - -	-1.67	- - -	-1.89	- - -	-2.80	- - -
20	-.43	-.15	-.33	.12	-1.03	.33	-1.27	.45	-1.51	.54	-1.61	.58	-1.80	.65	-2.37	.63
25	-.58	-.07	-.30	.13	-1.06	.33	-1.26	.43	-1.47	.51	-1.56	.55	-1.71	.60	-2.11	.57
30	-.43	-.01	-.77	.18	-1.09	.33	-1.28	.42	-1.46	.49	-1.54	.52	-1.67	.58	-1.91	.54
35	-.32	.06	-.84	.21	-1.13	.35	-1.30	.43	-1.46	.49	-1.53	.52	-1.65	.56	-1.76	.53
40	-.61	.11	-.92	.25	-1.18	.36	-1.33	.43	-1.47	.49	-1.53	.51	-1.64	.56	-1.65	.53
45	-.69	.18	-.96	.30	-1.20	.39	-1.33	.45	-1.46	.50	-1.50	.52	-1.60	.56	-1.59	.53
50	-.74	.26	-1.00	.35	-1.20	.43	-1.32	.46	-1.43	.53	-1.48	.54	-1.56	.58	-1.47	.53
55	-.80	.31	-1.05	.40	-1.20	.47	-1.31	.52	-1.41	.55	-1.44	.57	-1.52	.60	-1.41	.57
60	-.88	.39	-1.10	.46	-1.23	.51	-1.33	.54	-1.42	.58	-1.44	.60	-1.52	.62	-1.37	.61
65	-.97	.45	-1.18	.50	-1.27	.55	-1.38	.58	-1.43	.61	-1.46	.62	-1.53	.65	-1.34	.62
70	-1.11	.55	-1.29	.53	-1.35	.57	-1.42	.62	-1.49	.62	-1.50	.62	-1.55	.62	-1.32	.62
Vane																
0	-2.21	- - -	-2.80	- - -	-1.95	- - -	-1.92	- - -	-1.88	- - -	-1.84	- - -	-1.75	- - -	-0.88	- - -
1	- - -	0.99	- - -	0.99	- - -	0.99	- - -	0.99	- - -	1.00	- - -	0.99	- - -	0.99	- - -	0.99
2	- - -	.71	- - -	.69	- - -	.72	- - -	.73	- - -	.74	- - -	.73	- - -	.73	- - -	.79
3	- - -	.58	- - -	.57	- - -	.61	- - -	.62	- - -	.63	- - -	.62	- - -	.61	- - -	.72
4	- - -	.36	- - -	.33	- - -	.42	- - -	.43	- - -	.43	- - -	.43	- - -	.41	- - -	.39
5	-1.37	-.03	-1.56	-.04	-2.77	.03	-2.73	.07	-2.72	.08	-2.69	.09	-2.67	.06	-1.71	.38
6	-2.43	-.61	-2.42	-.64	-1.98	-.46	-1.92	-.46	-1.90	-.45	-1.87	-.43	-1.84	-.49	-1.27	.01
Main Flap																
0	-1.14	- - -	-1.16	- - -	-0.92	- - -	-0.94	- - -	-0.90	- - -	-0.89	- - -	-0.93	- - -	-0.30	- - -
.25	-1.86	-0.49	-1.90	-0.49	-1.58	-0.32	-1.60	-0.34	-1.53	-0.32	-1.58	-0.31	-1.61	-0.33	-.78	0.14
.5	-2.62	.34	-2.89	.34	-2.25	.53	-2.29	.40	-2.23	.42	-2.21	.41	-2.33	.39	-1.82	.65
1	-2.73	.80	-2.81	.80	-2.35	.88	-2.40	.82	-2.34	.81	-2.31	.81	-2.44	.80	-1.36	.92
2.5	-2.99	.98	-3.05	.98	-2.56	.99	-2.57	.98	-2.51	.97	-2.48	.97	-2.62	.97	-1.58	1.01
5	-1.73	.96	-1.72	.97	-1.24	.98	-1.24	.97	-1.20	.97	-1.19	.97	-1.02	.98	-1.03	.96
7.5	-1.26	.90	-1.23	.91	-.81	.92	-.80	.91	-.78	.92	-.77	.92	-.68	.94	-.92	.91
10	-.87	.82	-.87	.85	-.67	.85	-.66	.85	-.64	.86	-.64	.86	-.62	.88	-.78	.85
15	-.30	.68	-.28	.70	-.68	.70	-.64	.70	-.62	.71	-.64	.73	-.67	.73	-.64	.71
20	-.07	.49	-.07	.52	-.60	.46	-.56	.50	-.57	.54	-.56	.52	-.60	.54	-.40	.52
22.5	-.01	.36	-.01	.39	-.49	.29	-.45	.31	-.46	.33	-.46	.34	-.50	.35	-.29	.32

TABLE IV.- PRESSURE DISTRIBUTION FOR THE NACA 64A010 AIRFOIL SECTION WITH A LEADING-EDGE FLAP AND A DOUBLE-SLOTTED FLAP DEFLECTED 52.7° - Continued

(b) $\delta_N = 15^\circ$

Airfoil section lift coefficient, c_l		1.41		1.60		2.13		2.43		2.62		2.79		2.84		2.80	
Chordwise station (percent airfoil chord)		Upper	Lower	Upper	Lower	Upper	Lower	Upper	Lower	Upper	Lower	Upper	Lower	Upper	Lower	Upper	Lower
Upper	Lower																
Main Airfoil																	
-0.48	-0.36	-0.98	-1.38	0.98	0.87	-0.13	0.54	-3.05	-1.62	-6.17	-4.18	-9.68	-6.89	-12.83	-8.69	-12.21	-8.90
-.49	-.82	.06	-1.90	.96	.61	-.70	.91	-4.17	-.33	-7.64	-2.01	-11.45	-3.98	-14.82	-5.33	-14.23	-3.83
-.44	-.03	.68	-1.81	.71	.44	-1.35	.99	-5.38	.30	-9.00	-.82	-13.00	-2.16	-15.98	-3.13	-15.90	-3.03
-.35	.82	.97	-1.64	.39	.38	-2.01	.99	-5.57	.76	-8.79	.16	-12.38	-.62	-14.94	-1.61	-14.98	-1.16
-.80	.50	1.01	-1.47	.16	.83	-2.07	.93	-5.11	.93	-8.13	.38	-12.33	.07	-13.46	-.33	-13.46	-.30
-.02	1.03	.96	-1.10	.01	.19	-1.90	.84	-4.68	1.01	-6.15	.92	-8.86	.67	-9.77	.48	-9.77	.49
.48	2.38	.85	-.82	-.05	.20	-1.82	.70	-3.14	.96	-4.79	1.01	-6.08	.98	-7.08	.94	-7.10	.94
1.30	3.84	.60	-.49	-.19	.01	-1.86	.65	-2.47	.91	-3.48	.98	-4.42	1.00	-5.06	.99	-5.06	.99
2.25	4.96	.46	-.30	-.07	.03	-1.85	.59	-2.30	.84	-3.17	.89	-4.01	.99	-4.38	1.00	-4.38	1.00
3.73	7.50	.28	-.08	-.41	.30	-1.86	.58	-2.12	.79	-2.88	.88	-3.51	.94	-3.98	.96	-3.98	.96
6.04	10.01	.07	.07	-.58	.36	-1.38	.58	-2.03	.76	-2.60	.84	-3.16	.90	-3.49	.93	-3.43	.92
8.36	13.52	-.14	.17	-.76	.48	-1.41	.62	-2.03	.76	-2.54	.82	-3.08	.88	-3.30	.90	-3.26	.92
10.88	16.5	- - -	.36	- - -	.58	- - -	.65	- - -	.77	- - -	.82	- - -	.87	- - -	.90	- - -	.88
12.08	- - -	-1.06	- - -	-1.82	- - -	-2.64	- - -	-3.37	- - -	-3.98	- - -	-4.40	- - -	-4.69	- - -	-4.69	- - -
12.71	- - -	-1.21	- - -	-2.01	- - -	-2.89	- - -	-3.56	- - -	-4.12	- - -	-4.60	- - -	-4.90	- - -	-4.90	- - -
13.35	- - -	-1.15	- - -	-1.91	- - -	-2.88	- - -	-3.38	- - -	-3.90	- - -	-4.36	- - -	-4.63	- - -	-4.63	- - -
14	- - -	-1.09	- - -	-1.80	- - -	-2.73	- - -	-3.18	— - -	-3.67	- - -	-4.09	- - -	-4.40	- - -	-4.37	- - -
17	- - -	-.77	- - -	-1.30	- - -	-1.87	- - -	-2.37	- - -	-2.74	- - -	-3.10	- - -	-3.29	- - -	-3.25	- - -
20	20	-.74	.27	-1.19	.44	-1.70	.58	-2.11	.71	-2.43	.77	-2.73	.82	-2.89	.84	-2.84	.85
23	23	-.76	.28	-1.16	.38	-1.37	.53	-1.90	.65	-2.15	.72	-2.40	.77	-2.52	.79	-2.47	.78
26	26	-.81	.28	-1.16	.37	-1.51	.50	-1.80	.61	-2.01	.68	-2.23	.72	-2.32	.73	-2.26	.74
29	29	-.87	.25	-1.19	.37	-1.50	.49	-1.73	.60	-1.92	.65	-2.10	.70	-2.18	.73	-2.18	.72
32	32	-.94	.27	-1.23	.39	-1.50	.49	-1.72	.59	-1.86	.64	-2.03	.68	-2.09	.70	-2.01	.69
35	35	-.98	.31	-1.23	.41	-1.47	.50	-1.67	.59	-1.76	.63	-1.93	.67	-1.97	.69	-1.89	.68
38	38	-1.01	.36	-1.24	.43	-1.44	.52	-1.61	.60	-1.71	.64	-1.84	.68	-1.86	.69	-1.79	.68
41	41	-1.04	.41	-1.24	.46	-1.42	.55	-1.57	.62	-1.64	.65	-1.79	.68	-1.77	.70	-1.68	.69
44	44	-1.10	.47	-1.28	.52	-1.43	.58	-1.57	.64	-1.61	.67	-1.73	.69	-1.73	.71	-1.62	.70
47	47	-1.16	.52	-1.32	.56	-1.45	.61	-1.57	.66	-1.60	.68	-1.71	.70	-1.69	.71	-1.58	.71
70	70	-1.27	.54	-1.39	.58	-1.50	.63	-1.63	.67	-1.62	.69	-1.73	.71	-1.71	.72	-1.57	.72
Vane																	
0		-1.63	- - -	-1.77	- - -	-1.77	- - -	-1.87	- - -	-1.61	- - -	-1.74	- - -	-1.58	- - -	-1.39	- - -
1		- - -	0.99	- - -	0.98	- - -	1.00	- - -	0.99	- - -	0.98	- - -	0.99	- - -	0.98	- - -	0.98
2		- - -	.71	- - -	.70	- - -	.72	- - -	.70	- - -	.72	- - -	.71	- - -	.73	- - -	.76
3		- - -	.61	- - -	.59	- - -	.61	- - -	.60	- - -	.61	- - -	.61	- - -	.63	- - -	.67
4		-3.84	.39	-3.69	.39	-3.84	.41	- - -	.39	- - -	.40	- - -	.41	- - -	.43	- - -	.50
5		-2.43	.03	-2.28	.02	-2.42	.05	-3.29	.01	-2.28	.07	-3.05	.05	-2.76	.11	-2.33	.20
6		-1.93	-.34	-1.98	-.34	-1.88	-.29	-2.28	-.36	-1.80	-.33	-2.07	-.48	-1.85	-.39	-1.55	-.25
Main Flap																	
0		-1.00	- - -	-0.98	- - -	-0.91	- - -	-1.06	- - -	-0.89	- - -	-0.98	- - -	-0.84	- - -	-0.66	- - -
.25		-1.70	-0.37	-1.67	-0.36	-1.39	-0.31	-1.76	-0.45	-1.32	-0.32	-1.63	-0.40	-1.44	-0.30	-1.22	-0.16
.5		-2.47	.61	-2.41	.40	-2.29	.42	-2.50	.34	-2.21	.39	-2.33	.34	-2.10	.40	-1.82	.48
1		-2.58	.82	-2.54	.81	-2.40	.82	-2.83	.78	-2.32	.79	-2.44	.78	-2.20	.79	-1.92	.84
2.5		-2.78	.96	-2.74	.96	-1.77	.96	-2.85	.97	-2.50	.97	-2.64	.96	-2.39	.96	-2.11	.98
5		-1.16	.93	-1.08	.96	-1.12	.97	-1.38	.99	-.97	.98	-1.37	.99	-1.24	.98	-1.15	.98
7.5		-.77	.89	-.73	.90	-.70	.92	-1.07	.95	-.83	.94	-.94	.96	-.86	.94	-.92	.94
10		-.74	.82	-.71	.84	-.62	.88	-.70	.90	-.58	.88	-.62	.92	-.60	.90	-.73	.89
15		-.78	.67	-.74	.69	-.65	.71	-.19	.77	-.58	.76	-.16	.82	-.88	.79	-.45	.77
20		-.78	.44	-.66	.46	-.58	.44	0	.61	-.50	.57	.05	.66	-.01	.64	-.23	.60
22.5		-.58	.24	-.70	.26	-.47	.33	.05	.46	-.10	.39	.10	.38	.09	.31	-.06	.45

TABLE IV.- PRESSURE DISTRIBUTION FOR THE NACA 64A010 AIRFOIL SECTION WITH A LEADING-EDGE FLAP AND A DOUBLE-SLOTTED FLAP DEFLECTED 52.7° - Continued

(c) $\delta_N = 30^\circ$

Airfoil section lift coefficient, c_l		2.03		2.45		2.66		2.82		2.99		3.06		3.08		3.03	
Chordwise station (percent airfoil chord)		Upper	Lower	Upper	Lower	Upper	Lower	Upper	Lower	Upper	Lower	Upper	Lower	Upper	Lower	Upper	Lower
Upper	Lower																
Main Airfoil																	
0.10	0.27	0.90	0.64	0.39	0.80	-1.12	-0.80	-3.07	-1.65	-5.66	-3.32	-7.33	-5.82	-8.36	-5.96	-9.34	-6.77
.22	.45	1.00	.53	-.09	.98	-1.43	.51	-1.04	-.59	-7.00	-1.74	-9.15	-2.70	-10.84	-3.17	-11.69	-3.84
.41	.67	.93	.18	-.78	1.00	-2.92	.61	-3.57	.26	-2.34	-.66	-10.63	-1.33	-11.76	-1.67	-12.85	-2.12
.63	.94	.77	.13	-1.84	.93	-3.31	.97	-3.44	.13	-2.27	.23	-10.87	-.16	-11.32	-.34	-12.57	-.62
.33	1.84	.36	.11	-1.35	.90	-3.19	1.01	-3.04	.90	-7.78	.61	-9.37	.36	-10.25	.84	-11.46	.03
.47	1.8	.39	.14	-1.33	.81	-2.87	.99	-1.39	1.00	-4.06	.91	-7.14	.79	-7.81	.74	-8.31	.64
.72	3.1	.47	.24	-1.12	.73	-2.20	.91	-3.22	.98	-4.46	1.01	-3.41	1.00	-3.86	.99	-4.21	.97
1.48	3.95	.57	.28	-1.03	.70	-1.84	.87	-2.42	.93	-3.32	1.00	-4.10	1.01	-4.42	1.01	-4.64	1.00
2.03	5.6	-.28	.37	-1.07	.68	-1.81	.83	-2.39	.91	-3.26	.97	-3.32	.99	-3.97	1.00	-4.08	1.00
3.57	8.0	-.22	.49	-1.19	.71	-1.88	.82	-2.31	.88	-3.07	.93	-3.43	.96	-3.68	.97	-3.88	.97
5.2	10.4	-.32	.59	-1.29	.73	-1.93	.83	-2.36	.88	-3.01	.92	-3.32	.93	-3.49	.93	-3.68	.96
7.2	13.6	-.29	.73	-1.63	.82	-2.16	.88	-2.62	.90	-3.13	.93	-3.39	.93	-3.54	.93	-3.71	.96
8.8	16.5	- - -	.77	- - -	.84	- - -	.89	- - -	.91	- - -	.94	- - -	.93	- - -	.96	- - -	.96
10.4	- - -	-2.74	- - -	-3.89	- - -	-4.69	- - -	-3.39	- - -	-3.94	- - -	-6.43	- - -	-6.74	- - -	-6.78	- - -
10.9	- - -	-3.51	- - -	-4.54	- - -	-5.46	- - -	-6.02	- - -	-6.83	- - -	-7.36	- - -	-7.72	- - -	-7.69	- - -
11.46	- - -	-3.60	- - -	-4.67	- - -	-5.79	- - -	-6.36	- - -	-7.39	- - -	-7.72	- - -	-8.08	- - -	-8.08	- - -
12.1	- - -	-3.77	- - -	-4.96	- - -	-5.88	- - -	-6.44	- - -	-7.25	- - -	-7.76	- - -	-8.10	- - -	-8.08	- - -
12.7	- - -	-3.61	- - -	-4.73	- - -	-5.58	- - -	-6.06	- - -	-6.81	- - -	-7.28	- - -	-7.61	- - -	-7.54	- - -
13.35	- - -	-3.28	- - -	-4.27	- - -	-5.04	- - -	-5.47	- - -	-6.12	- - -	-6.53	- - -	-6.82	- - -	-6.77	- - -
14	- - -	-2.93	- - -	-3.93	- - -	-4.60	- - -	-5.00	- - -	-5.58	- - -	-5.96	- - -	-6.21	- - -	-6.14	- - -
17	- - -	-2.04	- - -	-2.73	- - -	-3.21	- - -	-3.58	- - -	-3.93	- - -	-4.18	- - -	-4.36	- - -	-4.29	- - -
20	20	-1.79	.66	-2.54	.76	-2.73	.85	-3.05	.86	-3.36	.90	-3.52	.91	-3.62	.92	-3.66	.93
25	25	-1.61	.57	-2.04	.68	-2.36	.75	-2.60	.79	-2.84	.84	-2.94	.86	-3.02	.87	-3.03	.88
30	30	-1.54	.52	-1.91	.64	-2.17	.71	-2.37	.75	-2.53	.80	-2.63	.82	-2.69	.83	-2.68	.84
35	35	-1.52	.51	-1.82	.61	-2.03	.68	-2.22	.73	-2.37	.76	-2.42	.79	-2.47	.80	-2.44	.80
40	40	-1.52	.51	-1.78	.60	-1.97	.66	-2.12	.70	-2.24	.74	-2.28	.76	-2.31	.77	-2.26	.77
45	45	-1.52	.52	-1.71	.60	-1.88	.65	-2.01	.68	-2.11	.73	-2.12	.77	-2.13	.78	-2.08	.78
50	50	-1.52	.52	-1.65	.60	-1.81	.64	-1.90	.68	-1.99	.72	-1.97	.74	-2.01	.77	-1.95	.77
55	55	-1.52	.52	-1.58	.61	-1.72	.67	-1.81	.68	-1.88	.72	-1.87	.74	-1.89	.77	-1.79	.77
60	60	-1.53	.52	-1.55	.63	-1.70	.68	-1.77	.71	-1.82	.74	-1.80	.75	-1.82	.77	-1.68	.77
65	65	-1.54	.54	-1.54	.69	-1.68	.70	-1.75	.71	-1.78	.74	-1.75	.75	-1.76	.76	-1.60	.76
70	70	-1.49	.63	-1.57	.67	-1.71	.70	-1.77	.71	-1.78	.74	-1.74	.76	-1.73	.76	-1.57	.76
Nose																	
0		-1.79	- - -	-1.68	- - -	-1.68	- - -	-1.61	- - -	-1.71	- - -	-1.55	- - -	-1.49	- - -	-1.16	- - -
1		- - -	0.99	- - -	0.99	- - -	0.99	- - -	0.99	- - -	1.00	- - -	1.00	- - -	1.00	- - -	0.99
2		- - -	.72	- - -	.73	- - -	.72	- - -	.73	- - -	.74	- - -	.76	- - -	.77	- - -	.78
3		- - -	.61	- - -	.65	- - -	.61	- - -	.61	- - -	.64	- - -	.66	- - -	.67	- - -	.71
4		- - -	.42	-1.74	.43	- - -	.40	- - -	.41	-1.13	.43	-1.60	.47	-1.61	.50	-0.94	.57
5		-2.34	.05	-2.58	.08	-3.16	.04	-3.10	.03	-2.78	.11	-2.38	.16	-2.40	.19	-2.00	.30
6		-1.90	-.40	-1.79	-.43	-2.13	-.52	-2.11	-.52	-1.90	-.41	-1.70	-.32	-1.60	-.27	-1.31	-.10
Main Flap																	
0		-0.93	- - -	-0.88	- - -	-1.03	- - -	-1.02	- - -	-0.92	- - -	-0.78	- - -	-0.73	- - -	-0.49	- - -
.25		-1.32	-0.32	-1.72	-0.51	-1.72	-0.43	-1.67	-0.44	-1.51	-0.37	-1.35	-0.27	-1.27	-0.23	-0.98	-0.03
.5		-2.20	.41	-2.22	.41	-2.43	.33	-2.38	.38	-2.17	.34	-1.93	.32	-1.87	.43	-1.51	.53
1		-2.39	.82	-2.31	.80	-2.36	.77	-2.26	.77	-2.06	.76	-2.03	.78	-1.96	.80	-1.79	.87
2.5		-2.32	.88	-2.32	.87	-2.17	.86	-2.07	.86	-2.45	.87	-2.21	.93	-2.12	.97	-1.77	.98
5		-1.16	.97	-1.09	.98	-1.46	.99	-1.47	1.00	-1.22	.99	-1.10	.99	-1.07	1.00	-1.02	.99
7.5		-.74	.98	-.69	.93	-1.02	.97	-.94	.96	-.84	.96	-.77	.96	-.77	.97	-.84	.94
10		-.49	.89	-.61	.88	-.82	.90	-.82	.92	-.75	.92	-.54	.92	-.56	.93	-.82	.90
15		-.69	.82	-.64	.74	-.19	.79	-.13	.81	-.15	.82	-.10	.82	-.22	.82	-.14	.80
20		-.60	.51	-.57	.54	.02	.64	.03	.66	.03	.67	0	.67	-.03	.67	-.03	.64
22.5		-.48	.52	-.44	.55	.02	.50	.04	.52	.04	.54	.02	.54	.02	.54	-.03	.49

NACA

TABLE IV.- PRESSURE DISTRIBUTION FOR THE NACA 64A010 AIRFOIL SECTION WITH A LEADING-EDGE FLAP AND A DOUBLE-SLOTTED FLAP DEFLECTED 52.7° - Concluded

(d) $\delta_N = 45°$

Airfoil section lift coefficient, c_l		2.02		2.36		2.56		2.72		2.79		2.76		2.68		2.45	
Chordwise station (percent airfoil chord)		Upper	Lower	Upper	Lower	Upper	Lower	Upper	Lower	Upper	Lower	Upper	Lower	Upper	Lower	Upper	Lower
Upper	Lower																
Main Airfoil																	
1.7	1.58	0.98	0.98	0.87	0.48	1.08	0.98	0.89	0.88	1.08	0.88	0.98	0.78	0.48	0.79	0.74	0.88
1.9	2.11	1.00	0.98	1.00	0.48	0.98	0.98	0.98	0.98	0.98	0.98	0.98	1.00	0.98	1.00	0.98	0.98
1 1.9	2.52	0.98	0.98	0.98	0.48	0.98	0.98	0.98	0.98	0.98	0.98	0.98	0.98	0.98	0.98	0.98	0.98
1.5	2.52	0.98	0.98	0.98	0.48	0.98	0.98	0.98	0.98	0.98	0.98	0.98	0.98	0.98	0.98	0.98	0.98
1.4	2.52	0.98	0.98	0.98	0.48	0.98	0.98	0.98	0.98	0.98	0.98	0.98	0.98	0.98	0.98	0.98	0.98
1.4	2.52	0.98	0.98	0.98	0.48	0.98	0.98	0.98	0.98	0.98	0.98	0.98	0.98	0.98	0.98	0.98	0.98
2.5	2.52	0.98	0.98	0.98	0.48	0.98	0.98	0.98	0.98	0.98	0.98	0.98	0.98	0.98	0.98	0.98	0.98
3.5	2.52	0.98	0.98	0.98	0.48	0.98	0.98	0.98	0.98	0.98	0.98	0.98	0.98	0.98	0.98	0.98	0.98
4.5	2.52	0.98	0.98	0.98	0.48	0.98	0.98	0.98	0.98	0.98	0.98	0.98	0.98	0.98	0.98	0.98	0.98
5.5	2.52	0.98	0.98	0.98	0.48	0.98	0.98	0.98	0.98	0.98	0.98	0.98	0.98	0.98	0.98	0.98	0.98
6.5	2.52	0.98	0.98	0.98	0.48	0.98	0.98	0.98	0.98	0.98	0.98	0.98	0.98	0.98	0.98	0.98	0.98
7.5	2.52	0.98	0.98	0.98	0.48	0.98	0.98	0.98	0.98	0.98	0.98	0.98	0.98	0.98	0.98	0.98	0.98
8.5	2.52	0.98	0.98	0.98	0.48	0.98	0.98	0.98	0.98	0.98	0.98	0.98	0.98	0.98	0.98	0.98	0.98
9.5	2.52	0.98	0.98	0.98	0.48	0.98	0.98	0.98	0.98	0.98	0.98	0.98	0.98	0.98	0.98	0.98	0.98
10.5	2.52	0.98	0.98	0.98	0.48	0.98	0.98	0.98	0.98	0.98	0.98	0.98	0.98	0.98	0.98	0.98	0.98
11.5	2.52	0.98	0.98	0.98	0.48	0.98	0.98	0.98	0.98	0.98	0.98	0.98	0.98	0.98	0.98	0.98	0.98
12.5	2.52	0.98	0.98	0.98	0.48	0.98	0.98	0.98	0.98	0.98	0.98	0.98	0.98	0.98	0.98	0.98	0.98
13.5	2.52	0.98	0.98	0.98	0.48	0.98	0.98	0.98	0.98	0.98	0.98	0.98	0.98	0.98	0.98	0.98	0.98
14.5	2.52	0.98	0.98	0.98	0.48	0.98	0.98	0.98	0.98	0.98	0.98	0.98	0.98	0.98	0.98	0.98	0.98
15.5	2.52	0.98	0.98	0.98	0.48	0.98	0.98	0.98	0.98	0.98	0.98	0.98	0.98	0.98	0.98	0.98	0.98
16.5	2.52	0.98	0.98	0.98	0.48	0.98	0.98	0.98	0.98	0.98	0.98	0.98	0.98	0.98	0.98	0.98	0.98
17.5	2.52	0.98	0.98	0.98	0.48	0.98	0.98	0.98	0.98	0.98	0.98	0.98	0.98	0.98	0.98	0.98	0.98
18.5	2.52	0.98	0.98	0.98	0.48	0.98	0.98	0.98	0.98	0.98	0.98	0.98	0.98	0.98	0.98	0.98	0.98
Wake																	
0		-1.00	---	-1.00	---	-1.00	---	-1.00	---	-1.00	---	-1.00	---	-1.00	---	-1.00	---
1		---	0.00	---	0.00	---	0.00	---	0.00	---	0.00	---	0.00	---	0.00	---	0.00
2		---	0.00	---	0.00	---	0.00	---	0.00	---	0.00	---	0.00	---	0.00	---	0.00
3		---	0.00	---	0.00	---	0.00	---	0.00	---	0.00	---	0.00	---	0.00	---	0.00
4		---	0.00	---	0.00	---	0.00	---	0.00	---	0.00	---	0.00	---	0.00	---	0.00
5		---	0.00	---	0.00	---	0.00	---	0.00	---	0.00	---	0.00	---	0.00	---	0.00
6		---	0.00	---	0.00	---	0.00	---	0.00	---	0.00	---	0.00	---	0.00	---	0.00
Main Flap																	
0		-0.88	---	-1.00	---	-0.88	---	-0.88	---	-0.88	---	-0.88	---	-0.73	---	-0.14	---
.5		-1.00	-0.55	-1.00	-0.55	-1.00	-0.55	-1.00	-0.55	-1.00	-0.55	-1.00	-0.55	-1.00	-0.55	-1.00	0.00
1.5		-1.00	-0.55	-1.00	-0.55	-1.00	-0.55	-1.00	-0.55	-1.00	-0.55	-1.00	-0.55	-1.00	-0.55	-1.00	1.00
2.5		-1.00	-0.55	-1.00	-0.55	-1.00	-0.55	-1.00	-0.55	-1.00	-0.55	-1.00	-0.55	-1.00	-0.55	-1.00	0.55
3.5		-1.00	-0.55	-1.00	-0.55	-1.00	-0.55	-1.00	-0.55	-1.00	-0.55	-1.00	-0.55	-1.00	-0.55	-1.00	0.55
4.5		-1.00	-0.55	-1.00	-0.55	-1.00	-0.55	-1.00	-0.55	-1.00	-0.55	-1.00	-0.55	-1.00	-0.55	-1.00	0.55
5.5		-1.00	-0.55	-1.00	-0.55	-1.00	-0.55	-1.00	-0.55	-1.00	-0.55	-1.00	-0.55	-1.00	-0.55	-1.00	0.55
6.5		-1.00	-0.55	-1.00	-0.55	-1.00	-0.55	-1.00	-0.55	-1.00	-0.55	-1.00	-0.55	-1.00	-0.55	-1.00	0.55
7.5		-1.00	-0.55	-1.00	-0.55	-1.00	-0.55	-1.00	-0.55	-1.00	-0.55	-1.00	-0.55	-1.00	-0.55	-1.00	0.55
8.5		-1.00	-0.55	-1.00	-0.55	-1.00	-0.55	-1.00	-0.55	-1.00	-0.55	-1.00	-0.55	-1.00	-0.55	-1.00	0.55
9.5		-1.00	-0.55	-1.00	-0.55	-1.00	-0.55	-1.00	-0.55	-1.00	-0.55	-1.00	-0.55	-1.00	-0.55	-1.00	0.55

TABLE V.- PRESSURE DISTRIBUTION FOR THE NACA 64A010 AIRFOIL SECTION WITH A LEADING-EDGE SLAT AND A DOUBLE-SLOTTED FLAP RETRACTED

(a) Slat retracted

Airfoil section lift coefficient, c_l	0		0.23		0.48		0.65		0.85		0.95		1.05		0.85	
Chordwise Station (Percent airfoil chord)	Upper	Lower	Upper	Lower	Upper	Lower	Upper	Lower	Upper	Lower	Upper	Lower	Upper	Lower	Upper	Lower
Slat																
0	0.98	- - -	0.73	- - -	0.81	- - -	-1.84	- - -	-4.06	- - -	-5.46	- - -	-6.92	- - -	-2.58	- - -
.43	.86	0.10	-.70	0.73	-1.94	0.99	-3.16	0.92	-4.71	0.96	-5.87	0.27	-6.94	-0.07	-3.85	0.70
.85	.01	-.04	-.87	.96	-1.92	.89	-3.20	.99	-4.62	.92	-5.46	.81	-6.27	.63	-3.10	.95
1.7	-.07	-.13	-.73	.96	-1.51	.71	-2.29	.91	-3.20	.99	-3.75	1.00	-4.27	.98	-2.95	.99
2.55	-.14	-.18	-.70	.85	-1.26	.58	-1.96	.81	-2.68	.95	-3.10	.99	-3.49	1.00	-2.87	.94
3.4	-.15	-.22	-.64	.17	-1.22	.47	-1.69	.70	-2.29	.87	-2.64	.92	-2.97	.96	-2.73	.86
4.25	- - -	-.46	- - -	.08	- - -	.36	- - -	.57	- - -	.74	- - -	.81	- - -	.86	- - -	.73
4.59	- - -	-.20	- - -	.04	- - -	.26	- - -	.43	- - -	.56	- - -	.61	- - -	.66	- - -	.53
5.1	-.19	-.19	-.59	.10	-.99	.27	-1.44	.36	-1.91	.42	-2.18	.43	-2.44	.44	-2.38	.39
6.8	-.21	-.19	-.56	.16	-.89	.41	-1.27	.50	-1.66	.49	-1.89	.47	-2.30	.43	-2.04	.45
10.2	-.23	-.19	-.52	.08	-.78	.19	-1.08	.14	-1.38	.02	-1.55	-.03	-1.71	-.14	-1.68	-.10
13.6	-.24	-.19	-.46	.05	-.71	.13	-.95	.04	-1.20	-.13	-1.33	-.22	-1.47	-.31	-1.51	-.26
15.3	-.27	-.19	-.49	-.12	-.71	-.21	-.94	-.45	-1.17	-.69	-1.29	-.81	-1.42	-.91	-1.46	-.91
16.58	-.31	- - -	-.55	- - -	-.74	- - -	-.96	- - -	-1.18	- - -	-1.29	- - -	-1.41	- - -	-1.44	- - -
Main airfoil																
5	-0.19	- - -	-0.01	- - -	0.15	- - -	0.21	- - -	0.23	- - -	0.23	- - -	0.21	- - -	0.19	- - -
5.5	- - -	- - -	- - -	- - -	- - -	- - -	- - -	- - -	- - -	- - -	- - -	- - -	- - -	- - -	- - -	- - -
6	-.21	- - -	.13	- - -	.36	- - -	.48	- - -	.51	- - -	.51	- - -	.49	- - -	.49	- - -
7.5	-.19	-.28	.16	0.04	.36	0.28	.42	0.49	.39	0.65	.35	0.73	.30	0.78	.33	0.63
10	-.22	-.28	.07	-.04	.18	.18	.16	.38	.04	.54	-.04	.61	-.12	.66	.09	.53
12.5	-.22	- - -	.05	- - -	.14	- - -	.10	- - -	-.04	- - -	-.12	- - -	-.21	- - -	-.17	- - -
15	-.21	-.34	-.07	-.09	-.10	.09	-.30	.26	-.55	.40	-.66	.47	-.77	.52	-.74	.39
20	-.24	-.31	-.47	-.14	-.65	.03	-.84	.17	-1.02	.30	-1.12	.36	-1.22	.41	-1.23	.30
25	-.28	-.38	-.47	-.17	-.68	-.08	-.79	.10	-.94	.23	-1.05	.29	-1.10	.33	-1.10	.21
30	-.30	-.33	-.47	-.20	-.59	-.08	-.74	.03	-.89	.17	-.97	.22	-1.02	.26	-.99	.14
35	-.31	-.32	-.46	-.21	-.57	-.09	-.71	.02	-.85	.13	-.87	.17	-.94	.21	-.88	.08
40	-.32	-.33	-.46	-.22	-.55	-.12	-.66	-.02	-.75	.08	-.81	.12	-.86	.16	-.79	.04
45	-.30	-.31	-.42	-.22	-.51	-.12	-.60	-.03	-.68	.07	-.73	.09	-.77	.13	-.70	0
50	-.27	-.27	-.38	-.20	-.45	-.11	-.53	-.03	-.60	.06	-.64	.08	-.68	.10	-.64	.01
55	-.23	-.21	-.33	-.17	-.39	-.10	-.46	-.03	-.52	.03	-.55	.08	-.57	.09	-.57	.03
60	-.21	-.18	-.29	-.16	-.35	-.09	-.40	-.03	-.44	.03	-.47	.07	-.49	.08	-.52	.04
65	-.18	-.18	-.25	-.13	-.28	-.06	-.34	-.01	-.38	.03	-.39	.07	-.40	.14	-.47	.29
70	-.14	-.13	-.20	-.09	-.23	-.04	-.27	0	-.30	.05	-.31	.08	-.31	.16	-.43	.29
Main flap																
0	- - -	- - -	- - -	- - -	- - -	- - -	- - -	- - -	- - -	- - -	- - -	- - -	- - -	- - -	- - -	- - -
.25	- - -	- - -	- - -	- - -	- - -	- - -	- - -	- - -	- - -	- - -	- - -	- - -	- - -	- - -	- - -	- - -
.5	- - -	- - -	- - -	- - -	- - -	- - -	- - -	- - -	- - -	- - -	- - -	- - -	- - -	- - -	- - -	- - -
1	- - -	- - -	- - -	- - -	- - -	- - -	- - -	- - -	- - -	- - -	- - -	- - -	- - -	- - -	- - -	- - -
2.5	- - -	- - -	- - -	- - -	- - -	- - -	- - -	- - -	- - -	- - -	- - -	- - -	- - -	- - -	- - -	- - -
5	- - -	-0.05	- - -	-0.01	- - -	0.03	- - -	0.09	- - -	0.09	- - -	0.12	- - -	0.12	- - -	0
7.5	- - -	-.05	- - -	.01	- - -	.04	- - -	.09	- - -	.11	- - -	.12	- - -	.12	- - -	-0.02
10	-0.08	-.01	-.08	.01	-.10	.04	-0.08	.09	-0.11	.09	-0.10	.10	-0.10	.10	-0.09	-.04
15	.05	0	.03	.05	.01	.04	.03	.09	-.01	.07	-.04	.08	-.02	.08	-.07	-.09
20	.09	.06	.08	.07	.07	.07	.08	.09	.05	.07	.08	.08	.01	.07	-.05	-.13
22.5	.12	.10	.12	.10	.10	.10	.12	.12	.07	.09	.07	.08	.04	.07	-.03	-.14

TABLE V.- PRESSURE DISTRIBUTION FOR THE NACA 64A010 AIRFOIL SECTION WITH A LEADING-EDGE SLAT AND A DOUBLE-SLOTTED FLAP RETRACTED - Concluded

(b) Slat extended (optimum position for the model with no trailing-edge flap; $\delta_s = 25.6^{\circ}$, $x_s = 9.2$, $y_s = 8.7$, gap = 1.60)

Airfoil section lift coefficient, c_l	-0.01		0.47		0.94		1.38		1.64		1.87		1.94		1.82	
Chordwise Station (Percent airfoil chord)	Upper	Lower	Upper	Lower	Upper	Lower	Upper	Lower	Upper	Lower	Upper	Lower	Upper	Lower	Upper	Lower
Slat																
0	-0.53	- - -	-0.36	- - -	0.99	- - -	-0.05	- - -	-2.19	- - -	-3.16	- - -	-6.47	- - -	-6.04	- - -
.125	.97	-0.60	1.00	-1.33	.18	0.38	-1.88	0.88	-3.70	0.90	-3.81	0.94	-6.81	0.11	-6.67	0.84
.25	1.01	-.61	.98	-1.87	-.08	.61	-1.95	.88	-3.73	1.02	-3.70	.88	-6.16	.73	-4.33	.79
1.7	.94	-.60	.62	-.77	-.19	.16	-1.60	.71	-2.81	.96	-4.12	.99	-4.60	1.00	-4.08	1.03
2.5	.83	-.60	.32	-.62	-.22	.13	-1.47	.63	-2.49	.86	-3.54	.97	-3.98	1.00	-3.73	1.03
3.4	.74	-.61	.14	-.48	-.13	.16	-1.34	.51	-2.23	.76	-3.12	.91	-3.14	.95	-3.22	.97
4.23	- - -	-.62	- - -	-.31	- - -	.18	- - -	.38	- - -	.62	- - -	.79	- - -	.84	- - -	.86
4.39	- - -	-.62	- - -	-.26	- - -	.19	- - -	.38	- - -	.53	- - -	.70	- - -	.73	- - -	.77
5.1	.78	-.57	.47	-.16	-.44	.14	-1.31	.31	-2.31	.31	-2.73	.66	-3.01	.70	-2.82	.78
6.8	.45	-.57	.13	-.23	-.23	-.03	-1.31	.29	-1.94	.19	-2.34	.63	-2.76	.70	-2.39	.72
10.2	.21	-.58	-.10	-.27	-.10	-.11	-1.38	.23	-1.90	.17	-2.38	.64	-2.77	.70	-2.39	.72
13.6	-.03	-.59	-.33	-.14	-.28	.15	-1.37	.31	-1.97	.24	-2.39	.60	-2.53	.58	-2.38	.63
15.3	-.28	-.63	-.50	-.36	-1.03	-.26	-1.37	-.50	-2.12	-.58	-2.53	-.73	-2.47	-.79	-2.49	-.70
16.98	.46	- - -	.98	- - -	-1.89	- - -	-1.89	- - -	-2.33	- - -	-2.72	- - -	-2.86	- - -	-2.63	- - -
Main Airfoil																
3	-0.66	- - -	-1.21	- - -	-2.33	- - -	-2.93	- - -	-2.97	- - -	-3.03	- - -	-3.11	- - -	-2.88	- - -
3.5	- - -	- - -	- - -	- - -	- - -	- - -	- - -	- - -	- - -	- - -	- - -	- - -	- - -	- - -	- - -	- - -
5	-.66	- - -	-.88	- - -	-1.43	- - -	-2.17	- - -	-2.88	- - -	-3.39	- - -	-3.56	- - -	-3.26	- - -
7.5	-.89	-0.62	-1.12	-0.45	-1.94	.33	-2.97	1.00	-3.69	1.01	-4.14	0.99	-4.33	1.00	-4.12	1.03
10	-.78	-.63	-1.02	-.03	-1.96	.87	-2.81	.93	-3.33	.97	-3.73	.97	-3.90	.98	-3.92	1.01
12.5	-.68	- - -	-1.08	- - -	-1.88	- - -	-2.53	- - -	-2.73	- - -	-3.12	- - -	-3.12	- - -	-2.92	- - -
15	-.70	-.63	-1.09	.37	-1.64	.77	-2.20	.78	-2.56	.84	-2.87	.87	-2.96	.90	-2.83	.92
20	-.78	-.67	-1.03	.39	-1.48	.57	-1.94	.65	-2.21	.73	-2.38	.78	-2.47	.81	-2.32	.83
25	-.80	-.66	-.86	.31	-1.19	.44	-1.72	.53	-1.71	.63	-1.83	.71	-1.88	.73	-1.77	.74
30	-.74	-.62	-.73	.19	-1.02	.33	-1.31	.37	-1.46	.57	-1.54	.63	-1.57	.66	-1.42	.67
35	-.71	-.51	-.68	.12	-.92	.27	-1.13	.30	-1.26	.50	-1.32	.57	-1.34	.58	-1.23	.61
40	-.59	-.39	-.62	.06	-.83	.20	-1.02	.24	-1.10	.44	-1.14	.50	-1.14	.52	-1.08	.54
45	-.44	-.27	-.57	.03	-.73	.16	-.89	.20	-.94	.38	-.98	.46	-.95	.48	-.92	.48
50	-.40	-.17	-.49	.01	-.68	.14	-.73	.17	-.78	.36	-.77	.41	-.77	.44	-.78	.44
55	-.36	-.10	-.43	.01	-.54	.12	-.63	.15	-.64	.31	-.68	.38	-.61	.40	-.66	.40
60	-.33	-.05	-.36	0	-.46	.11	-.58	.12	-.58	.30	-.56	.34	-.47	.36	-.58	.36
65	-.26	-.03	-.29	.01	-.37	.10	-.49	.11	-.49	.27	-.37	.32	-.36	.34	-.38	.34
70	-.21	-.01	-.23	.01	-.31	.11	-.33	.10	-.31	.26	-.28	.29	-.29	.31	-.30	.32
Main Flap																
0	- - -	- - -	- - -	- - -	- - -	- - -	- - -	- - -	- - -	- - -	- - -	- - -	- - -	- - -	- - -	- - -
.25	- - -	- - -	- - -	- - -	- - -	- - -	- - -	- - -	- - -	- - -	- - -	- - -	- - -	- - -	- - -	- - -
.5	- - -	- - -	- - -	- - -	- - -	- - -	- - -	- - -	- - -	- - -	- - -	- - -	- - -	- - -	- - -	- - -
1	- - -	- - -	- - -	- - -	- - -	- - -	- - -	- - -	- - -	- - -	- - -	- - -	- - -	- - -	- - -	- - -
2.5	- - -	- - -	- - -	- - -	- - -	- - -	- - -	- - -	- - -	- - -	- - -	- - -	- - -	- - -	- - -	- - -
5	- - -	0.04	- - -	0.03	- - -	0.12	- - -	0.21	- - -	0.23	- - -	0.26	- - -	0.27	- - -	0.21
7.5	- - -	.03	- - -	.03	- - -	.13	- - -	.22	- - -	.22	- - -	.24	- - -	.23	- - -	.19
10	-0.09	.03	-0.09	.03	-0.10	.12	-0.10	.17	-0.10	.20	-0.16	.22	-0.11	.21	-0.10	.15
15	.02	.05	0	.04	-.04	.09	-.04	.13	-.09	.14	-.15	.15	-.11	.15	-.14	.07
20	.03	.07	.04	.03	0	.08	-.01	.10	-.07	.09	-.14	.07	-.11	.07	-.11	-.02
22.5	.08	.08	.07	.08	.04	.08	.01	.08	-.03	.05	-.13	.01	-.10	.01	-.08	-.08

TABLE VI.- PRESSURE DISTRIBUTION FOR THE NACA 64A010 AIRFOIL SECTION WITH A LEADING-EDGE SLAT AND A SPLIT FLAP DEFLECTED 60°

(a) Slat retracted

Airfoil section lift coefficient, c_l	.29		.73		1.18		1.46		1.61		1.71		1.79		1.86	
Chordwise Station (Percent airfoil chord)	Upper	Lower	Upper	Lower	Upper	Lower	Upper	Lower	Upper	Lower	Upper	Lower	Upper	Lower	Upper	Lower
	Slat															
0	-0.14	- - -	0.97	- - -	-0.87	- - -	-3.84	- - -	-6.35	- - -	-7.94	- - -	-1.95	- - -	-1.90	- - -
.43	.92	-1.60	-.12	0.47	-2.61	0.99	-4.44	0.75	-6.31	0.05	-7.46	-0.35	-2.04	0.60	-1.97	0.61
.85	.83	-1.39	-.34	.31	-2.51	.98	-4.58	.91	-5.85	.69	-6.89	.49	-2.09	.88	-2.01	.89
1.7	.63	-1.13	-.35	.18	-1.80	.86	-3.22	1.00	-4.09	.99	-4.63	.94	-2.09	1.00	-2.00	1.00
2.55	.49	-.91	-.39	.12	-1.63	.74	-2.74	.96	-3.41	1.00	-3.84	1.00	-2.08	.99	-2.00	.99
3.4	.40	-.84	-.39	.07	-1.43	.65	-2.36	.88	-2.92	.96	-3.29	.99	-2.08	.94	-2.01	.94
4.25	- - -	-.81	- - -	-.01	- - -	.52	- - -	.77	- - -	.87	- - -	.91	- - -	.85	- - -	.84
4.59	- - -	-.73	- - -	-.05	- - -	.35	- - -	.55	- - -	.62	- - -	.68	- - -	.62	- - -	.94
5.1	.27	-.66	-.40	.03	-1.27	.33	-2.01	.38	-2.45	.36	-2.74	.36	-2.10	.43	-2.01	.46
6.8	.20	-.66	-.42	.07	-1.17	.40	-1.78	.36	-2.16	.29	-2.39	.25	-2.12	.29	-2.03	.34
10.2	.07	-.66	-.44	.04	-1.05	0	-1.53	-.24	-1.82	-.40	-2.00	-.49	-2.16	-.57	-2.05	-.49
13.6	-.01	-.66	-.47	.07	-.97	-.08	-1.38	-.35	-1.61	-.53	-1.77	-.62	-2.17	-.71	-2.05	-.62
15.3	-.06	-.66	-.51	.20	-.99	-.52	-1.36	-.91	-1.58	-1.12	-1.71	-1.22	-2.17	-1.53	-2.05	-1.42
16.58	-.12	- - -	-.57	- - -	-1.04	- - -	-1.39	- - -	-1.60	- - -	-1.73	- - -	-2.17	- - -	-2.05	- - -
	Main Airfoil															
5	0.69	- - -	0.09	- - -	0.43	- - -	0.12	- - -	0.07	- - -	0.05	- - -	0.13	- - -	0.19	- - -
5.5	- - -	-0.20	- - -	0.14	- - -	-0.08	- - -	-0.04	- - -	-0.03	- - -	-0.03	- - -	-0.12	- - -	-0.17
6	.75	- - -	.01	- - -	.31	- - -	.43	- - -	.36	- - -	.33	- - -	.38	- - -	.43	- - -
7.5	.67	-.52	.04	.07	0	.51	.23	.73	.12	.82	.05	.87	.09	.82	.16	.81
10	.73	-.49	.07	.01	-.02	.42	-.22	.64	-.40	.74	-.48	.78	-.58	.73	-.48	.73
12.5	.77	- - -	.12	- - -	-.40	- - -	-.26	- - -	-.45	- - -	-.53	- - -	-.65	- - -	-.53	- - -
15	.70	-.36	.17	.05	-.08	.35	-.78	.53	-.99	.62	-1.10	.68	-1.36	.64	-1.23	.63
20	-.13	-.29	-.51	.05	-.95	.30	-1.27	.46	-1.44	.55	-1.56	.58	-2.09	.55	-2.04	.55
25	-.22	-.21	-.57	.07	-.95	.30	-1.22	.44	-1.38	.52	-1.47	.56	-1.96	.53	-1.88	.52
30	-.29	-.13	-.61	.10	-.94	.30	-1.18	.43	-1.31	.49	-1.39	.53	-1.96	.51	-1.90	.49
35	-.35	-.04	-.65	.14	-.95	.31	-1.16	.43	-1.27	.49	-1.34	.52	-1.90	.50	-1.88	.48
40	-.42	.04	-.69	.18	-.95	.34	-1.14	.43	-1.23	.49	-1.30	.52	-1.79	.50	-1.82	.48
45	-.44	.16	-.69	.26	-.92	.39	-1.09	.46	-1.18	.51	-1.22	.55	-1.68	.52	-1.74	.51
50	-.45	.29	-.68	.35	-.89	.44	-1.03	.51	-1.10	.55	-1.14	.57	-1.55	.55	-1.66	.53
55	-.45	.36	-.66	.45	-.85	.52	-.97	.57	-1.03	.60	-1.06	.62	-1.42	.61	-1.57	.60
60	-.48	.38	-.66	.56	-.83	.61	-.92	.62	-.99	.66	-1.01	.68	-1.31	.66	-1.48	.65
65	-.48	.38	-.65	.60	-.79	.70	-.87	.71	-.92	.74	-.95	.75	-1.20	.69	-1.39	.74
70	-.49	.38	-.64	.60	-.75	.71	-.83	.77	-.86	.79	-.88	.81	-1.10	.81	-1.11	.81
75	-.49	.35	-.62	.56	-.73	.69	-.78	.77	-.82	.79	-.83	.81	-1.03	.81	-1.23	.81
80	-.52	-1.03	-.62	-1.01	-.71	-.97	-.75	-.92	-.78	-.88	-.79	-.87	-.96	-.72	-1.16	-.77
85	-.56	-1.03	-.65	-1.01	-.71	-.95	-.74	-.92	-.75	-.88	-.77	-.87	-.90	-.72	-1.09	-.77
90	-.62	-1.03	-.68	-1.01	-.73	-.96	-.74	-.92	-.75	-.88	-.75	-.87	-.91	-.72	-1.03	-.77
95	-.74	-1.03	-.78	-1.01	-.80	-.96	-.79	-.92	-.79	-.88	-.79	-.87	-.93	-.72	-.96	-.77
97.5	-.81	-1.03	-.83	-1.01	-.83	-.96	-.82	-.92	-.81	-.88	-.81	-.87	-.91	-.72	-.95	-.77

TABLE VI.- PRESSURE DISTRIBUTION FOR THE NACA 64A010 AIRFOIL SECTION WITH A LEADING-EDGE SLAT AND A SPLIT FLAP DEFLECTED 60° - Concluded

(b) Slat extended (optimum position for the model with split flap deflected 60°; $\delta_s = 29.1$, $x_s = 8.2$, $y_s = 9.3$, gap = 1.25)

Airfoil section lift coefficient, c_l	1.25		1.69		2.09		2.45		2.61		2.77		2.81		2.80	
Chordwise Station (Percent airfoil chord)	Upper	Lower	Upper	Lower	Upper	Lower	Upper	Lower	Upper	Lower	Upper	Lower	Upper	Lower	Upper	Lower
Slat																
0	-0.89	- - -	0.99	- - -	-0.01	- - -	-3.34	- - -	-5.71	- - -	-9.04	- - -	-9.94	- - -	-10.38	- - -
.43	.97	-1.87	.26	0.37	-1.66	0.99	-4.13	0.67	-6.06	0.18	-8.58	-0.68	-9.89	-0.90	-9.52	-1.05
.85	.92	-1.05	.16	.29	-1.79	.91	-4.46	.94	-5.96	.74	-7.94	.31	-8.48	.21	-8.71	.12
1.7	.73	-.53	-.10	.87	-1.47	.78	-3.89	1.00	-4.21	.99	-5.54	.88	-5.90	.86	-6.06	.82
2.55	.58	-.36	-.22	.87	-1.38	.69	-2.91	.96	-3.65	1.00	-4.76	1.00	-4.98	.99	-5.31	.97
3.4	.47	-.21	-.27	.89	-1.29	.61	-2.61	.90	-3.23	.96	-4.17	1.00	-4.41	1.01	-4.51	1.01
4.25	- - -	-.03	- - -	.31	- - -	.51	- - -	.79	- - -	.87	- - -	.96	- - -	.97	- - -	.97
4.39	- - -	.08	- - -	.33	- - -	.47	- - -	.71	- - -	.81	- - -	.91	- - -	.92	- - -	.93
5.1	.29	.08	-.40	.29	-1.29	.47	-2.38	.68	-2.88	.77	-3.64	.86	-3.84	.88	-3.93	.88
6.8	.14	.01	-.51	.16	-1.30	.44	-2.26	.67	-2.70	.73	-3.34	.86	-3.51	.87	-3.58	.88
10.2	-.12	.04	-.73	.08	-1.43	.42	-2.24	.66	-2.59	.77	-3.12	.91	-3.25	.92	-3.30	.92
13.6	.39	.04	-.96	.20	-1.60	.53	-2.32	.79	-2.62	.77	-3.08	.70	-3.20	.70	-3.24	.68
15.3	-.37	.03	-1.16	.18	-1.77	.44	-2.47	.17	-2.75	.16	-3.18	-.11	-3.31	-.15	-3.34	-.16
16.58	-.77	- - -	-1.38	- - -	-1.94	- - -	-2.61	- - -	-2.88	- - -	-3.30	- - -	-3.42	- - -	-3.45	- - -
Main Airfoil																
5	-1.44	- - -	-2.67	- - -	-3.52	- - -	-4.24	- - -	-4.57	- - -	-5.17	- - -	-5.38	- - -	-5.44	- - -
5.5	- - -	-0.16	- - -	-0.20	- - -	-0.12	- - -	-0.10	- - -	-0.09	- - -	-0.11	- - -	-0.11	- - -	-0.11
6	-1.01	- - -	-1.71	- - -	-2.73	- - -	-4.09	- - -	-4.52	- - -	-5.19	- - -	-5.35	- - -	-5.40	- - -
7.5	-1.66	0	-2.64	.37	-3.86	.99	-5.04	1.00	-5.52	.99	-6.06	.99	-6.25	.99	-6.25	.99
10	-1.64	.20	-2.52	.88	-3.46	.99	-4.43	1.00	-4.76	1.00	-5.27	1.00	-5.38	1.00	-5.44	1.00
12.5	-1.40	- - -	-2.14	- - -	-2.84	- - -	-3.62	- - -	-3.87	- - -	-4.31	- - -	-4.39	- - -	-4.44	- - -
15	-1.32	.66	-2.16	.87	-2.80	.88	-3.47	.93	-3.68	.95	-4.03	.98	-4.12	.97	-4.14	.97
20	-1.32	.62	-2.03	.73	-2.53	.78	-3.04	.87	-3.20	.90	-3.43	.92	-3.53	.93	-3.50	.93
25	-1.30	.58	-1.69	.65	-2.08	.73	-2.45	.83	-2.56	.86	-2.72	.90	-2.79	.91	-2.76	.91
30	-1.20	.51	-1.53	.59	-1.86	.69	-2.16	.79	-2.23	.82	-2.36	.86	-2.41	.87	-2.38	.87
35	-1.15	.48	-1.44	.56	-1.70	.66	-1.96	.76	-2.01	.79	-2.11	.83	-2.15	.84	-2.12	.84
40	-1.12	.46	-1.38	.55	-1.60	.65	-1.80	.74	-1.83	.77	-1.90	.80	-1.93	.82	-1.91	.82
45	-1.07	.47	-1.29	.56	-1.47	.65	-1.63	.74	-1.65	.76	-1.68	.79	-1.71	.80	-1.68	.80
50	-1.00	.51	-1.20	.58	-1.34	.66	-1.46	.74	-1.48	.76	-1.50	.79	-1.51	.80	-1.49	.80
55	-.94	.56	-1.12	.62	-1.22	.69	-1.32	.75	-1.31	.78	-1.33	.80	-1.34	.82	-1.32	.82
60	-.91	.62	-1.05	.69	-1.13	.74	-1.20	.79	-1.18	.81	-1.18	.83	-1.18	.83	-1.16	.83
65	-.86	.70	-.97	.77	-1.04	.81	-1.08	.84	-1.07	.84	-1.05	.87	-1.05	.87	-1.03	.87
70	-.81	.75	-.91	.78	-.95	.84	-.97	.88	-.95	.90	-.92	.91	-.92	.91	-.90	.91
75	-.77	.75	-.86	.78	-.87	.86	-.88	.90	-.86	.90	-.82	.92	-.82	.92	-.79	.92
80	-.74	-.92	-.81	-.85	-.81	-.73	-.80	-.62	-.77	-.56	-.73	-.50	-.72	-.49	-.70	-.47
85	-.74	-.90	-.78	-.83	-.75	-.70	-.74	-.59	-.70	-.53	-.66	-.47	-.65	-.47	-.63	-.46
90	-.74	-.91	-.75	-.83	-.73	-.70	-.68	-.59	-.64	-.53	-.59	-.47	-.58	-.47	-.57	-.46
95	-.79	-.92	-.78	-.84	-.70	-.70	-.65	-.59	-.60	-.53	-.54	-.47	-.53	-.47	-.78	-.46
97.5	-.82	-.92	-.78	-.84	-.70	-.70	-.63	-.59	-.57	-.53	-.53	-.47	-.50	-.47	-.75	-.46

NACA

TABLE VII.- PRESSURE DISTRIBUTION FOR THE NACA 64A010 AIRFOIL SECTION WITH A LEADING-EDGE SLAT AND A DOUBLE-SLOTTED FLAP DEFLECTED 52.7°

(a) Slat retracted

Airfoil section lift coefficient, c_l	1.02		1.44		1.83		2.05		2.21		2.35		2.40		2.32	
Chordwise Station (Percent airfoil chord)	Upper	Lower	Upper	Lower	Upper	Lower	Upper	Lower	Upper	Lower	Upper	Lower	Upper	Lower	Upper	Lower
Slat																
0	-0.80	---	---	---	-0.72	---	-0.56	---	-1.10	---	-0.56	---	-1.24	---	-1.32	---
.25	---	---	0.55	---	---	---	---	---	---	---	---	---	---	---	---	---
.50	---	---	---	---	---	---	---	---	---	---	---	---	---	---	---	---
.75	---	---	---	---	---	---	---	---	---	---	---	---	---	---	---	---
1.00	---	---	---	---	---	---	---	---	---	---	---	---	---	---	---	---
1.25	---	---	---	---	---	---	---	---	---	---	---	---	---	---	---	---
1.50	---	---	---	---	---	---	---	---	---	---	---	---	---	---	---	---
1.75	---	---	---	---	---	---	---	---	---	---	---	---	---	---	---	---
2.00	---	---	---	---	---	---	---	---	---	---	---	---	---	---	---	---
Main Airfoil																
2.50	-0.35	---	-0.14	---	-0.02	---	0	---	-0.04	---	-0.10	---	-0.15	---	-0.07	---
5.0	---	---	---	---	---	---	---	---	---	---	---	---	---	---	---	---
7.5	---	---	---	---	---	---	---	---	---	---	---	---	---	---	---	---
10.0	---	---	---	---	---	---	---	---	---	---	---	---	---	---	---	---
15.0	---	---	---	---	---	---	---	---	---	---	---	---	---	---	---	---
20.0	---	---	---	---	---	---	---	---	---	---	---	---	---	---	---	---
25.0	---	---	---	---	---	---	---	---	---	---	---	---	---	---	---	---
30.0	---	---	---	---	---	---	---	---	---	---	---	---	---	---	---	---
35.0	---	---	---	---	---	---	---	---	---	---	---	---	---	---	---	---
40.0	---	---	---	---	---	---	---	---	---	---	---	---	---	---	---	---
45.0	---	---	---	---	---	---	---	---	---	---	---	---	---	---	---	---
50.0	---	---	---	---	---	---	---	---	---	---	---	---	---	---	---	---
55.0	---	---	---	---	---	---	---	---	---	---	---	---	---	---	---	---
60.0	---	---	---	---	---	---	---	---	---	---	---	---	---	---	---	---
65.0	---	---	---	---	---	---	---	---	---	---	---	---	---	---	---	---
70.0	---	---	---	---	---	---	---	---	---	---	---	---	---	---	---	---
75.0	---	---	---	---	---	---	---	---	---	---	---	---	---	---	---	---
80.0	---	---	---	---	---	---	---	---	---	---	---	---	---	---	---	---
85.0	---	---	---	---	---	---	---	---	---	---	---	---	---	---	---	---
90.0	---	---	---	---	---	---	---	---	---	---	---	---	---	---	---	---
95.0	---	---	---	---	---	---	---	---	---	---	---	---	---	---	---	---
Nose																
0	-1.60	---	-0.56	---	-1.16	---	-1.40	---	-1.36	---	-1.30	---	-1.34	---	-1.51	---
.25	---	---	---	---	---	---	---	---	---	---	---	---	---	---	---	---
.50	---	---	---	---	---	---	---	---	---	---	---	---	---	---	---	---
.75	---	---	---	---	---	---	---	---	---	---	---	---	---	---	---	---
1.00	---	---	---	---	---	---	---	---	---	---	---	---	---	---	---	---
1.25	---	---	---	---	---	---	---	---	---	---	---	---	---	---	---	---
1.50	---	---	---	---	---	---	---	---	---	---	---	---	---	---	---	---
1.75	---	---	---	---	---	---	---	---	---	---	---	---	---	---	---	---
2.00	---	---	---	---	---	---	---	---	---	---	---	---	---	---	---	---
Main Flap																
0	-0.55	---	-0.55	---	-0.52	---	-0.54	---	-0.55	---	-0.59	---	-0.59	---	-0.65	---
.5	-0.55	---	---	---	---	---	---	---	---	---	---	---	---	---	---	-0.13
1.0	-0.55	---	---	---	---	---	---	---	---	---	---	---	---	---	---	---
2.5	-0.55	---	---	---	---	---	---	---	---	---	---	---	---	---	---	---
5.0	-0.55	---	---	---	---	---	---	---	---	---	---	---	---	---	---	---
7.5	-0.55	---	---	---	---	---	---	---	---	---	---	---	---	---	---	---
10.0	-0.55	---	---	---	---	---	---	---	---	---	---	---	---	---	---	---
15.0	-0.55	---	---	---	---	---	---	---	---	---	---	---	---	---	---	---
20.0	-0.55	---	---	---	---	---	---	---	---	---	---	---	---	---	---	---
25.0	-0.55	---	---	---	---	---	---	---	---	---	---	---	---	---	---	---
30.0	-0.55	---	---	---	---	---	---	---	---	---	---	---	---	---	---	---
35.0	-0.55	---	---	---	---	---	---	---	---	---	---	---	---	---	---	---
40.0	-0.55	---	---	---	---	---	---	---	---	---	---	---	---	---	---	---
45.0	-0.55	---	---	---	---	---	---	---	---	---	---	---	---	---	---	---
50.0	-0.55	---	---	---	---	---	---	---	---	---	---	---	---	---	---	---
55.0	-0.55	---	---	---	---	---	---	---	---	---	---	---	---	---	---	---
60.0	-0.55	---	---	---	---	---	---	---	---	---	---	---	---	---	---	---
65.0	-0.55	---	---	---	---	---	---	---	---	---	---	---	---	---	---	---
70.0	-0.55	---	---	---	---	---	---	---	---	---	---	---	---	---	---	---
75.0	-0.55	---	---	---	---	---	---	---	---	---	---	---	---	---	---	---
80.0	-0.55	---	---	---	---	---	---	---	---	---	---	---	---	---	---	---
85.0	-0.55	---	---	---	---	---	---	---	---	---	---	---	---	---	---	---
90.0	-0.55	---	---	---	---	---	---	---	---	---	---	---	---	---	---	---
95.0	-0.55	---	---	---	---	---	---	---	---	---	---	---	---	---	---	---

TABLE VII.- PRESSURE DISTRIBUTION FOR THE NACA 64A010 AIRFOIL SECTION WITH A LEADING-EDGE SLAT AND A DOUBLE-SLOTTED FLAP DEFLECTED 52.7° - Concluded

(b) Slat extended (optimum position for the model with double-slotted flap deflected 52.7°; $\delta_s = 26.1°$, $x_s = 7.9$, $y_s = -8.1$, gap = 1.10)

Airfoil section lift coefficient, c_l	2.02		2.34		2.72		2.87		3.01		3.46		3.48		3.63	
Chordwise location (Percent airfoil chord)	Upper	Lower	Upper	Lower	Upper	Lower	Upper	Lower	Upper	Lower	Upper	Lower	Upper	Lower	Upper	Lower
Slat																
0	0.88	---	0.88	---	-0.83	---	-1.00	---	-1.00	---	-1.00	---	-1.12	---	-1.00	---
.25	-0.97	-0.97	-1.00	0.49	-1.00	0.88	-1.00	0.97	-1.00	0.88	-1.00	0.97	-1.00	0.49	-1.00	0.49
.5	-1.00	-1.00	-1.00	-1.00	-1.00	-1.00	-1.00	-1.00	-1.00	-1.00	-1.00	-1.00	-1.00	-1.00	-1.00	-1.00
1	-1.00	-1.00	-1.00	-1.00	-1.00	-1.00	-1.00	-1.00	-1.00	-1.00	-1.00	-1.00	-1.00	-1.00	-1.00	-1.00
1.5	-1.00	-1.00	-1.00	-1.00	-1.00	-1.00	-1.00	-1.00	-1.00	-1.00	-1.00	-1.00	-1.00	-1.00	-1.00	-1.00
2	-1.00	-1.00	-1.00	-1.00	-1.00	-1.00	-1.00	-1.00	-1.00	-1.00	-1.00	-1.00	-1.00	-1.00	-1.00	-1.00
2.5	---	---	---	---	---	---	---	---	---	---	---	---	---	---	---	---
3	---	---	---	---	---	---	---	---	---	---	---	---	---	---	---	---
3.5	---	---	---	---	---	---	---	---	---	---	---	---	---	---	---	---
4	---	---	---	---	---	---	---	---	---	---	---	---	---	---	---	---
4.5	---	---	---	---	---	---	---	---	---	---	---	---	---	---	---	---
5	---	---	---	---	---	---	---	---	---	---	---	---	---	---	---	---
5.5	---	---	---	---	---	---	---	---	---	---	---	---	---	---	---	---
6	---	---	---	---	---	---	---	---	---	---	---	---	---	---	---	---
6.5	---	---	---	---	---	---	---	---	---	---	---	---	---	---	---	---
7	---	---	---	---	---	---	---	---	---	---	---	---	---	---	---	---
7.5	---	---	---	---	---	---	---	---	---	---	---	---	---	---	---	---
8	---	---	---	---	---	---	---	---	---	---	---	---	---	---	---	---
8.5	---	---	---	---	---	---	---	---	---	---	---	---	---	---	---	---
9	---	---	---	---	---	---	---	---	---	---	---	---	---	---	---	---
9.5	---	---	---	---	---	---	---	---	---	---	---	---	---	---	---	---
10	---	---	---	---	---	---	---	---	---	---	---	---	---	---	---	---
Main Airfoil																
0	-1.40	---	-1.38	---	-1.66	---	-1.39	---	-1.78	---	-1.80	---	-1.99	---	-1.99	---
.25	---	---	---	---	---	---	---	---	---	---	---	-0.97	---	---	---	---
.5	---	---	---	---	---	---	---	---	---	---	---	---	---	---	---	---
1	-1.00	0.88	-1.00	---	-1.00	---	-1.00	---	-1.00	---	-1.00	---	-1.00	---	-1.00	---
1.5	-1.00	0.88	-1.00	0.88	-1.00	1.00	-1.00	1.00	-1.00	0.88	-1.00	1.00	-1.00	1.00	-1.00	1.00
2	-1.00	.88	-1.00	.88	-1.00	.97	-1.00	.88	-1.00	.88	-1.00	.88	-1.00	1.00	-1.00	1.00
2.5	-1.00	---	-1.00	---	-1.00	---	-1.00	---	-1.00	---	-1.00	---	-1.00	---	-1.00	---
3	-1.00	.88	-1.00	.88	-1.00	.88	-1.00	.88	-1.00	.88	-1.00	.88	-1.00	.88	-1.00	.88
3.5	-1.00	.88	-1.00	.88	-1.00	.88	-1.00	.88	-1.00	.88	-1.00	.88	-1.00	.88	-1.00	.88
4	-1.00	.88	-1.00	.88	-1.00	.88	-1.00	.88	-1.00	.88	-1.00	.88	-1.00	.88	-1.00	.88
4.5	-1.00	.88	-1.00	.88	-1.00	.88	-1.00	.88	-1.00	.88	-1.00	.88	-1.00	.88	-1.00	.88
5	-1.00	.88	-1.00	.88	-1.00	.88	-1.00	.88	-1.00	.88	-1.00	.88	-1.00	.88	-1.00	.88
5.5	-1.00	.88	-1.00	.88	-1.00	.88	-1.00	.88	-1.00	.88	-1.00	.88	-1.00	.88	-1.00	.88
6	-1.00	.88	-1.00	.88	-1.00	.88	-1.00	.88	-1.00	.88	-1.00	.88	-1.00	.88	-1.00	.88
6.5	-1.00	.88	-1.00	.88	-1.00	.88	-1.00	.88	-1.00	.88	-1.00	.88	-1.00	.88	-1.00	.88
7	-1.00	.88	-1.00	.88	-1.00	.88	-1.00	.88	-1.00	.88	-1.00	.88	-1.00	.88	-1.00	.88
7.5	-1.00	.88	-1.00	.88	-1.00	.88	-1.00	.88	-1.00	.88	-1.00	.88	-1.00	.88	-1.00	.88
8	-1.00	.88	-1.00	.88	-1.00	.88	-1.00	.88	-1.00	.88	-1.00	.88	-1.00	.88	-1.00	.88
8.5	-1.00	.88	-1.00	.88	-1.00	.88	-1.00	.88	-1.00	.88	-1.00	.88	-1.00	.88	-1.00	.88
9	-1.00	.88	-1.00	.88	-1.00	.88	-1.00	.88	-1.00	.88	-1.00	.88	-1.00	.88	-1.00	.88
9.5	-1.00	.88	-1.00	.88	-1.00	.88	-1.00	.88	-1.00	.88	-1.00	.88	-1.00	.88	-1.00	.88
10	-1.00	.88	-1.00	.88	-1.00	.88	-1.00	.88	-1.00	.88	-1.00	.88	-1.00	.88	-1.00	.88
Vane																
0	-1.37	---	-1.03	---	-1.16	---	-1.09	---	-0.97	---	-1.03	---	-1.08	---	-1.08	---
1	---	0.88	---	0.97	---	0.88	---	0.88	---	0.97	---	0.88	---	0.88	---	0.88
2	---	.88	---	.88	---	.88	---	.88	---	.88	---	.88	---	.88	---	.88
3	-1.00	.88	-1.00	.88	-1.00	.88	-1.00	.88	-1.00	.88	-1.00	.88	-1.00	.88	-1.00	.88
4	-1.00	.88	-1.00	.88	-1.00	.88	-1.00	.88	-1.00	.88	-1.00	.88	-1.00	.88	-1.00	.88
5	-1.00	.88	-1.00	.88	-1.00	.88	-1.00	.88	-1.00	.88	-1.00	.88	-1.00	.88	-1.00	.88
6	-1.00	.88	-1.00	.88	-1.00	.88	-1.00	.88	-1.00	.88	-1.00	.88	-1.00	.88	-1.00	.88
Main Flap																
0	-0.98	---	-0.77	---	-0.83	---	-0.68	---	-0.68	---	-0.93	---	-0.98	---	-0.81	---
.25	-1.00	-0.97	-1.00	-0.88	-1.00	-0.88	-1.00	-0.88	-1.00	-0.88	-1.00	-0.88	-1.00	-0.88	-1.00	-0.88
.5	-1.00	-1.00	-1.00	-1.00	-1.00	-1.00	-1.00	-1.00	-1.00	-1.00	-1.00	-1.00	-1.00	-1.00	-1.00	-1.00
1	-1.00	-1.00	-1.00	-1.00	-1.00	-1.00	-1.00	-1.00	-1.00	-1.00	-1.00	-1.00	-1.00	-1.00	-1.00	-1.00
1.5	-1.00	-1.00	-1.00	-1.00	-1.00	-1.00	-1.00	-1.00	-1.00	-1.00	-1.00	-1.00	-1.00	-1.00	-1.00	-1.00
2	-1.00	-1.00	-1.00	-1.00	-1.00	-1.00	-1.00	-1.00	-1.00	-1.00	-1.00	-1.00	-1.00	-1.00	-1.00	-1.00
2.5	-1.00	-1.00	-1.00	-1.00	-1.00	-1.00	-1.00	-1.00	-1.00	-1.00	-1.00	-1.00	-1.00	-1.00	-1.00	-1.00
3	-1.00	-1.00	-1.00	-1.00	-1.00	-1.00	-1.00	-1.00	-1.00	-1.00	-1.00	-1.00	-1.00	-1.00	-1.00	-1.00
3.5	-1.00	-1.00	-1.00	-1.00	-1.00	-1.00	-1.00	-1.00	-1.00	-1.00	-1.00	-1.00	-1.00	-1.00	-1.00	-1.00
4	-1.00	-1.00	-1.00	-1.00	-1.00	-1.00	-1.00	-1.00	-1.00	-1.00	-1.00	-1.00	-1.00	-1.00	-1.00	-1.00
4.5	-1.00	-1.00	-1.00	-1.00	-1.00	-1.00	-1.00	-1.00	-1.00	-1.00	-1.00	-1.00	-1.00	-1.00	-1.00	-1.00

TABLE VIII.- PRESSURE DISTRIBUTION FOR THE NACA 64A010 AIRFOIL SECTION WITH A LEADING-EDGE SLAT AND NO TRAILING-EDGE FLAP. INTERMEDIATE SLAT POSITIONS BETWEEN RETRACTED AND EXTENDED TO $x_s = 9.2$, $y_s = -8.7$, GAP = 1.60, $\delta_s = 25.6^\circ$

(a) $\delta_s = 5.1^\circ$, $x_s = 2.3$, $y_s = -1.4$, gap = 0.35

Airfoil section lift coefficient, c_l	-0.02		0.21		0.42		0.68		0.90		1.07		1.14		0.98	
Chordwise Station (Percent airfoil chord)	Upper	Lower	Upper	Lower	Upper	Lower	Upper	Lower	Upper	Lower	Upper	Lower	Upper	Lower	Upper	Lower
Slat																
0	0.53	- - -	0.97	- - -	0.83	- - -	-0.38	- - -	-2.73	- - -	-5.23	- - -	-6.76	- - -	-1.55	- - -
.43	.77	-0.86	.26	-0.05	-.57	0.68	-2.10	0.99	-3.47	0.86	-5.47	0.34	-6.66	-0.04	-2.13	0.84
.85	.58	-.82	.03	-.09	-.79	.49	-2.16	.90	-3.75	.99	-5.36	.83	-6.44	.66	-2.17	.99
1.7	.38	-.70	-.08	-.17	-.69	.30	-1.66	.71	-2.70	.94	-3.74	1.00	-4.43	.99	-2.09	.98
2.55	.25	-.64	-.17	-.21	-.69	.18	-1.45	.56	-2.31	.83	-3.13	.97	-3.73	.99	-2.08	.89
3.4	.17	-.60	-.20	-.25	-.65	.08	-1.29	.42	-2.00	.70	-2.68	.88	-3.22	.93	-2.09	.77
4.25	- - -	-.55	- - -	-.31	- - -	-.08	- - -	.17	- - -	.49	- - -	.70	- - -	.78	- - -	.57
4.59	- - -	-.51	- - -	-.30	- - -	-.13	- - -	-.04	- - -	.27	- - -	.52	- - -	.60	- - -	.37
5.1	.05	-.51	-.26	-.33	-.64	-.34	-1.17	-.13	-1.73	.17	-2.25	.39	-2.70	.46	-2.05	.26
6.8	-.01	-.55	-.31	-.47	-.62	-.51	-1.08	.19	-1.55	.33	-1.96	.53	-2.35	.58	-1.99	.93
10.2	-.13	-.58	-.38	-.75	-.62	-1.05	-1.00	-1.84	-1.35	-.24	-1.65	-2.83	-1.97	-3.20	-1.84	-2.63
13.6	-.25	-.60	-.44	-.84	-.65	-1.23	-.95	-2.35	-1.23	-.31	-1.47	-3.54	-1.74	-4.00	-1.67	-3.39
15.3	-.34	-.58	-.51	-.73	-.70	-.99	-.99	-1.58	-1.25	-.20	-1.44	-2.32	-1.70	-2.65	-1.56	-2.23
16.98	-.49	0	-.61	- - -	-.79	- - -	-1.05	- - -	-1.30	- - -	-1.47	- - -	-1.71	- - -	-1.47	- - -
Main airfoil																
5	-0.56	- - -	-0.53	- - -	-0.75	- - -	-0.65	- - -	-0.44	- - -	-0.21	- - -	-0.15	- - -	-0.33	- - -
5.5	- - -	-0.65	- - -	-0.04	- - -	0.05	- - -	0.10	- - -	0.08	- - -	0.05	- - -	-0.01	- - -	-0.04
6	-.58	- - -	-.52	- - -	-.51	- - -	-.16	- - -	-.13	- - -	-.20	- - -	-.30	- - -	-.15	- - -
7.5	-.58	-.44	-.71	.46	-.99	.61	-1.68	.69	-2.23	.81	-2.62	.88	-2.99	.91	-2.37	.84
10	-.66	.05	-.86	.25	-1.44	.34	-2.97	.49	-4.02	.64	-4.62	.75	-5.12	.79	-4.28	.71
12.5	-.65	- - -	-.69	- - -	-.92	- - -	-1.53	- - -	-2.01	- - -	-2.31	- - -	-2.58	- - -	-2.17	- - -
15	-.40	-.14	-.60	-.01	-.75	.14	-.99	.33	-1.22	.47	-1.38	.60	-1.59	.62	-1.31	.53
20	-.31	-.23	-.61	-.10	-.81	.04	-1.01	.21	-1.19	.35	-1.29	.45	-1.46	.49	-1.01	.41
25	-.33	-.27	-.52	-.14	-.69	-.01	-.87	.14	-.99	.27	-1.01	.38	-1.18	.41	-.93	.31
30	-.34	-.30	-.48	-.18	-.62	-.05	-.78	.08	-.87	.21	-.84	.31	-.99	.32	-.89	.23
35	-.34	-.31	-.47	-.21	-.58	-.09	-.73	.04	-.78	.16	-.69	.25	-.84	.24	-.87	.15
40	-.34	-.33	-.46	-.23	-.56	-.12	-.66	0	-.69	.10	-.55	.18	-.71	.18	-.84	.08
45	-.33	-.31	-.42	-.22	-.51	-.12	-.60	-.03	-.60	.07	-.44	.14	-.59	.13	-.83	.04
50	-.30	-.29	-.38	-.21	-.45	-.12	-.52	-.03	-.51	.05	-.40	.12	-.54	.10	-.80	0
55	-.26	-.25	-.33	-.18	-.39	-.10	-.45	-.03	-.43	.04	-.39	.09	-.51	.07	-.79	-.03
60	-.23	-.22	-.29	-.16	-.34	-.09	-.39	-.03	-.40	.03	-.39	.07	-.51	.04	-.77	-.05
65	-.20	-.18	-.25	-.13	-.29	-.07	-.33	-.01	-.38	.03	-.39	.05	-.51	.03	-.75	-.07
70	-.16	-.14	-.20	-.09	-.22	-.04	-.26	0	-.35	.03	-.39	.05	-.51	.01	-.72	-.09
75	-.12	-.10	-.14	-.07	-.17	-.01	-.21	.01	-.33	.03	-.40	.04	-.53	-.01	-.71	-.11
80	-.08	-.07	-.10	-.04	-.12	0	-.16	.03	-.30	.03	-.42	.02	-.53	-.03	-.68	-.13
85	-.04	-.04	-.05	-.01	-.07	.01	-.12	.03	-.27	.03	-.43	0	-.53	-.07	-.65	-.17
90	0	0	0	.03	-.01	.04	-.08	.03	-.23	.01	-.43	-.04	-.53	-.11	-.63	-.22
95	.05	.03	.03	.05	.05	.07	-.04	.03	-.20	-.03	-.41	-.12	-.50	-.19	-.59	-.31
97.5	.08	.08	.10	.08	.08	.08	-.03	.03	-.17	-.07	-.39	-.19	-.47	-.27	-.57	-.39

TABLE VIII.- PRESSURE DISTRIBUTION FOR THE NACA 64A010 AIRFOIL SECTION WITH A LEADING-EDGE SLAT AND NO TRAILING-EDGE FLAP. INTERMEDIATE SLAT POSITIONS BETWEEN RETRACTED AND EXTENDED TO $x_s = 9.2$, $y_s = -8.7$, GAP = 1.60, $\delta_s = 25.6^\circ$ - Continued

(b) $\delta_s = 10.2^\circ$, $x_s = 4.2$, $y_s = 3.1$, gap = 0.45

Airfoil section lift coefficient, c_l	-0.05		0.40		0.79		1.03		1.19		1.28		1.33		1.26	
Chordwise Station (Percent airfoil chord)	Upper	Lower	Upper	Lower	Upper	Lower	Upper	Lower	Upper	Lower	Upper	Lower	Upper	Lower	Upper	Lower
Slat																
0	-0.39	- - -	0.99	- - -	0	- - -	-2.03	- - -	-4.21	- - -	-6.12	- - -	-7.89	- - -	-6.54	- - -
.43	.93	-1.84	.16	0.18	-1.71	0.97	-3.27	0.92	-4.78	0.97	-6.31	0.16	-7.12	-0.12	-6.98	0.03
.85	.88	-1.57	-.09	.04	-1.82	.84	-3.48	.99	-4.88	.93	-6.02	.75	-6.62	.62	-6.23	.70
1.7	.69	-1.20	-.17	-.05	-1.46	.85	-2.53	.92	-3.46	1.00	-4.13	1.00	-4.49	.99	-4.27	1.00
2.55	.53	-.96	-.26	-.09	-1.27	.51	-2.21	.81	-2.94	.93	-3.47	.99	-3.74	1.00	-3.57	1.00
3.4	.43	-.84	-.29	-.13	-1.17	.38	-1.95	.68	-2.55	.84	-2.97	.94	-3.21	.96	-3.07	.93
4.25	- - -	-.71	- - -	-.17	- - -	.21	- - -	.49	- - -	.69	- - -	.81	- - -	.85	- - -	.82
4.59	- - -	-.58	- - -	-.14	- - -	.13	- - -	.36	- - -	.56	- - -	.68	- - -	.74	- - -	.71
5.1	.29	-.52	-.35	-.21	-1.10	.03	-1.71	.31	-2.18	.51	-2.51	.62	-2.69	.68	-2.57	.64
6.8	.17	-.33	-.40	-.23	-1.05	0	-1.37	.29	-1.93	.48	-2.22	.61	-2.35	.67	-2.27	.62
10.2	0	-.35	-.48	-.33	-1.03	-.38	-1.43	-.05	-1.72	.09	-1.91	.10	-2.00	.10	-1.92	.12
13.6	-.16	-.38	-.57	-1.33	-1.03	-3.41	-1.38	-4.91	-1.61	-5.89	-1.75	-6.23	-1.82	-6.30	-1.74	-5.92
15.3	-.27	-.38	-.66	-1.30	-1.10	-2.66	-1.42	-3.66	-1.62	-4.16	-1.77	-4.48	-1.83	-4.64	-1.75	-4.33
16.58	-.46	- - -	-.79	- - -	-1.25	- - -	-1.58	- - -	-1.78	- - -	-1.88	- - -	-1.93	- - -	-1.83	- - -
Main airfoil																
5	-0.37	- - -	-0.66	- - -	-0.81	- - -	-0.47	- - -	-0.82	- - -	-0.05	- - -	0.03	- - -	0	- - -
5.5	- - -	-0.07	- - -	-0.03	- - -	0.07	- - -	0.08	- - -	0.07	- - -	0.05	- - -	0.05	- - -	0
6	-.62	- - -	-.37	- - -	-.46	- - -	-.29	- - -	-.34	- - -	-.42	- - -	-.46	- - -	-.39	- - -
7.5	-.61	-.60	-1.21	0.25	-.84	.27	-3.40	.90	-3.99	.93	-4.34	.94	-4.52	.95	-4.22	0.95
10	-.78	-.39	-1.21	.61	-.84	.65	-3.33	.74	-4.14	.81	-4.48	.84	-4.62	.86	-4.33	.86
12.5	.03	- - -	-.70	- - -	-1.08	- - -	-1.42	- - -	-1.63	- - -	-1.73	- - -	-1.79	- - -	-1.69	- - -
15	-.21	-.07	-.79	.27	-1.17	.43	-1.46	.35	-1.61	.64	-1.69	.69	-1.71	.70	-1.58	.70
20	-.40	-.12	-.84	.10	-1.20	.29	-1.40	.42	-1.49	.51	-1.51	.56	-1.51	.58	-1.36	.57
25	-.36	-.18	-.71	.03	-.99	.23	-1.14	.35	-1.18	.44	-1.14	.49	-1.13	.52	-1.01	.49
30	-.36	-.25	-.65	.04	-.87	.16	-.99	.29	-.99	.35	-.91	.41	-.88	.44	-.87	.40
35	-.36	-.27	-.60	-.08	-.81	.16	-.88	.22	-.84	.30	-.73	.35	-.68	.38	-.81	.34
40	-.36	-.30	-.56	-.12	-.73	.10	-.79	.16	-.70	.23	-.56	.29	-.52	.30	-.73	.26
45	-.34	-.29	-.51	-.12	-.65	.06	-.69	.13	-.56	.20	-.47	.23	-.44	.26	-.71	.21
50	-.30	-.26	-.46	-.12	-.56	.04	-.58	.10	-.47	.16	-.43	.20	-.43	.22	-.69	.17
55	-.26	-.23	-.39	-.10	-.48	.04	-.49	.09	-.42	.14	-.43	.17	-.43	.19	-.66	.14
60	-.23	-.22	-.34	-.09	-.42	.03	-.42	.08	-.39	.12	-.44	.14	-.45	.16	-.64	.10
65	-.20	-.17	-.29	-.08	-.34	.03	-.35	.08	-.38	.11	-.46	.11	-.47	.14	-.62	.08
70	-.16	-.14	-.22	-.05	-.27	.04	-.31	.08	-.38	.09	-.47	.10	-.49	.12	-.60	.05
75	-.11	-.10	-.17	-.03	-.21	.04	-.27	.08	-.38	.08	-.49	.09	-.51	.09	-.58	.03
80	-.08	-.07	-.12	-.01	-.14	.05	-.23	.07	-.38	.07	-.49	.07	-.53	.07	-.57	0
85	-.04	-.03	-.07	.01	-.09	.05	-.20	.07	-.38	.05	-.51	.03	-.54	.03	-.55	-.03
90	0	.01	-.01	.03	-.04	.05	-.16	.05	-.36	.01	-.49	-.03	-.53	-.03	-.53	-.10
95	.04	.04	.04	.05	0	.05	-.13	.02	-.34	-.05	-.47	-.12	-.49	-.13	-.49	-.20
97.5	.08	.08	.08	.08	.03	.05	-.12	-.02	-.31	-.13	-.43	-.14	-.47	-.22	-.48	-.28

TABLE VIII.- PRESSURE DISTRIBUTION FOR THE NACA 64A010 AIRFOIL SECTION WITH A LEADING-EDGE SLAT AND NO TRAILING-EDGE FLAP. INTERMEDIATE SLAT POSITIONS BETWEEN RETRACTED AND EXTENDED TO $x_s = 9.2$, $y_s = -8.7$, GAP = 1.60, $\delta_s = 25.6^\circ$ - Continued

(c) $\delta_s = 15.4^\circ$, $x_s = 6.0$, $y_s = -4.8$, gap = 0.30

Airfoil section lift coefficient, c_l	-0.08		0.36		0.80		1.18		1.33		1.45		1.50		1.43	
Chordwise Station (percent airfoil chord)	Upper	Lower	Upper	Lower	Upper	Lower	Upper	Lower	Upper	Lower	Upper	Lower	Upper	Lower	Upper	Lower
Slat																
0	-1.68	- - -	0.68	- - -	0.69	- - -	-1.81	- - -	-3.57	- - -	-5.62	- - -	-6.69	- - -	-7.50	- - -
.43	.95	-2.84	.69	-0.54	.48	0.79	-3.44	0.95	-4.87	0.68	-5.94	0.86	-6.80	0.33	-7.50	-0.08
.85	1.01	-2.38	.50	-.54	-1.02	.64	-3.37	1.00	-4.56	.95	-5.85	.81	-6.53	.70	-6.94	.65
1.7	.88	-1.56	.31	-.44	-.87	.46	-2.49	.92	-3.27	.99	-4.08	1.00	-4.45	1.00	-4.62	1.00
2.55	.74	-1.25	.17	-.37	-.86	.36	-2.21	.81	-2.83	.92	-3.48	.99	-3.76	1.00	-3.89	1.00
3.4	.64	-1.00	.09	-.32	-.82	.30	-1.96	.69	-2.48	.82	-3.01	.92	-3.25	.95	-3.39	.97
4.25	- - -	-.77	- - -	-.26	- - -	.30	- - -	.53	- - -	.68	- - -	.81	- - -	.84	- - -	.87
4.59	- - -	-.60	- - -	-.18	- - -	.23	- - -	.46	- - -	.59	- - -	.70	- - -	.75	- - -	.78
5.1	.48	-.55	-.04	-.18	-.82	.16	-1.76	.42	-2.18	.55	-2.60	.66	-2.78	.70	-2.83	.73
6.8	.35	-.56	-.13	-.22	-.83	.04	-1.64	.38	-1.99	.52	-2.34	.64	-2.50	.69	-2.58	.72
10.2	.14	-.57	-.28	-.18	-.87	.23	-1.55	.32	-1.83	.64	-2.09	.75	-2.22	.79	-2.27	.82
13.6	-.05	-.57	-.42	-.63	-.97	-.90	-1.55	-1.07	-1.79	-1.18	-2.01	-1.33	-2.11	-1.41	-2.17	-1.44
15.3	-.20	-.57	-.55	-1.03	-1.08	-2.00	-1.66	-3.31	-1.88	-3.71	-2.09	-4.09	-2.19	-4.27	-2.23	-4.36
16.98	-.41	- - -	-.72	- - -	-1.29	- - -	-1.88	- - -	-2.10	- - -	-2.30	- - -	-2.40	- - -	-2.30	- - -
Main airfoil																
5	-0.58	- - -	-0.56	- - -	-0.82	- - -	-0.68	- - -	-0.43	- - -	-0.26	- - -	-0.20	- - -	-0.15	- - -
5.5	- - -	-0.08	- - -	-0.26	- - -	0.26	- - -	0.65	- - -	0.05	- - -	0.39	- - -	0.33	- - -	0.04
6	-.61	- - -	-.94	- - -	-.65	- - -	-.98	- - -	-.70	- - -	-.84	- - -	-.91	- - -	-.91	- - -
7.5	-.79	-.60	-.99	-.31	-1.59	.69	-3.31	.97	-.38	.96	-4.15	.97	-4.32	.97	-4.37	.98
10	-.40	-.64	-.72	-.01	-1.25	.79	-1.88	.84	-.21	.86	-2.34	.88	-2.44	.90	-2.44	.91
12.5	-.12	- - -	-.63	- - -	-1.17	- - -	-1.70	- - -	-1.92	- - -	-2.11	- - -	-2.19	- - -	-2.17	- - -
15	-.33	-.48	-.78	.43	-1.27	.53	-1.77	.65	-1.95	.70	-2.09	.75	-2.16	.77	-2.14	.78
20	-.47	-.12	-.85	.22	-1.26	.35	-1.65	.51	-1.77	.57	-1.86	.61	-1.91	.63	-1.93	.65
25	-.40	-.05	-.69	.10	-1.09	.27	-1.59	.44	-1.40	.50	-1.46	.55	-1.48	.58	-1.50	.59
30	-.39	-.14	-.63	.01	-.91	.20	-1.14	.36	-1.21	.42	-1.23	.48	-1.26	.50	-1.24	.57
35	-.38	-.20	-.58	-.04	-.82	.14	-1.03	.31	-1.07	.36	-1.08	.42	-1.08	.44	-1.07	.45
40	-.38	-.24	-.54	-.09	-.75	.09	-.92	.25	-.95	.30	-.94	.35	-.94	.37	-.91	.39
45	-.35	-.25	-.49	-.10	-.66	.07	-.81	.21	-.81	.26	-.78	.31	-.77	.33	-.74	.35
50	-.32	-.23	-.44	-.10	-.58	.05	-.69	.20	-.68	.23	-.64	.27	-.62	.29	-.59	.31
55	-.27	-.22	-.37	-.09	-.50	.04	-.57	.17	-.56	.21	-.51	.25	-.49	.26	-.46	.28
60	-.26	-.20	-.32	-.08	-.43	.04	-.48	.16	-.46	.18	-.40	.22	-.39	.23	-.37	.24
65	-.21	-.16	-.27	-.06	-.35	.04	-.38	.16	-.36	.17	-.31	.20	-.32	.22	-.31	.23
70	-.17	-.13	-.21	-.04	-.27	.05	-.30	.14	-.27	.16	-.26	.18	-.27	.19	-.28	.21
75	-.13	-.09	-.15	-.01	-.21	.06	-.22	.14	-.22	.16	-.23	.16	-.24	.16	-.27	.18
80	-.09	-.07	-.10	0	-.14	.06	-.16	.13	-.17	.14	-.21	.14	-.24	.14	-.26	.15
85	-.05	-.03	-.06	.01	-.08	.06	-.10	.12	-.14	.12	-.20	.12	-.24	.11	-.25	.12
90	-.01	0	0	.04	-.03	.06	-.31	.10	-.10	.09	-.20	.08	-.23	.07	-.24	.08
95	.04	.04	.05	.06	-.04	.07	-.27	.08	-.09	.05	-.20	.01	-.23	-.01	-.24	0
97.5	.08	.07	.09	.08	-.06	.07	-.26	.05	-.09	.01	-.20	-.05	-.23	-.07	-.24	-.08

NACA

TABLE VIII.- PRESSURE DISTRIBUTION FOR THE NACA 64A010 AIRFOIL SECTION WITH A LEADING-EDGE SLAT AND NO TRAILING-EDGE FLAP. INTERMEDIATE SLAT POSITIONS BETWEEN RETRACTED AND EXTENDED TO $x_s = 9.2$, $y_s = -8.7$, GAP = 1.60, $\delta_s = 25.6^\circ$ - Concluded

(d) $\delta_s = 20.5^\circ$, $x_s = 7.7$, $y_s = -6.7$, gap = 0.80

Airfoil section lift coefficient, c_l	0.10		0.56		1.01		1.33		1.58		1.72		1.77		1.69	
Chordwise Station (Percent airfoil chord)	Upper	Lower	Upper	Lower	Upper	Lower	Upper	Lower	Upper	Lower	Upper	Lower	Upper	Lower	Upper	Lower
Slat																
0	-1.49	- - -	0.75	- - -	0.61	- - -	-1.16	- - -	-4.03	- - -	-6.29	- - -	-7.21	- - -	-7.63	- - -
.43	.95	-2.57	.64	-0.38	-.94	0.84	-3.04	0.99	-4.65	0.59	-6.54	0.13	-7.21	-0.10	-7.73	-0.13
.85	1.00	-2.12	.56	-.39	-1.13	.69	-2.94	.99	-4.88	.92	-6.33	.74	-6.87	.64	-7.22	.62
1.7	.86	-1.36	.23	-.31	-.97	.52	-2.17	.87	-3.52	1.00	-4.32	1.00	-4.74	.97	-4.86	.99
2.55	.73	-1.07	.10	-.26	-.95	.43	-1.97	.75	-3.05	.95	-3.68	1.00	-4.01	1.00	-4.12	1.00
3.4	.62	-.84	.03	-.21	-.91	.35	-1.78	.65	-2.68	.86	-3.21	.95	-3.49	.96	-3.59	.97
4.25	- - -	-.60	- - -	-.14	- - -	.29	- - -	.51	- - -	.73	- - -	.85	- - -	.87	- - -	.88
4.59	- - -	-.44	- - -	-.09	- - -	.27	- - -	.44	- - -	.65	- - -	.76	- - -	.79	- - -	.80
5.1	.46	-.40	-.12	-.09	-.91	.22	-1.64	.43	-2.36	.62	-2.78	.73	-3.00	.75	-3.09	.76
6.8	.33	-.42	-.21	-.14	-.94	.09	-1.55	.39	-2.17	.61	-2.51	.72	-2.71	.74	-2.79	.75
10.2	.10	-.43	-.38	-.18	-.99	.07	-1.52	.36	-2.01	.58	-2.27	.72	-2.43	.74	-2.50	.75
13.6	-.09	-.46	-.55	-.22	-1.09	.09	-1.55	.31	-1.97	.57	-2.19	.56	-2.34	.55	-2.40	.54
15.3	-.25	-.51	-.66	-.61	-1.21	-.75	-1.65	-.66	-2.05	-.61	-2.26	-.67	-2.39	-.73	-2.45	-.76
16.58	-.43	- - -	-.82	- - -	-1.38	- - -	-1.81	- - -	-2.21	- - -	-2.40	- - -	-2.53	- - -	-2.58	- - -
Main airfoil																
5	-0.52	- - -	-0.81	- - -	-1.23	- - -	-1.18	- - -	-0.85	- - -	-0.67	- - -	-0.66	- - -	-0.67	- - -
5.5	- - -	-0.07	- - -	-0.04	- - -	0	- - -	0.05	- - -	0.07	- - -	0.07	- - -	0.04	- - -	0.01
6	-.60	- - -	-.64	- - -	-.90	- - -	-1.01	- - -	-1.37	- - -	-1.55	- - -	-1.66	- - -	-1.70	- - -
7.5	-.57	-.51	-.94	-.13	-1.56	0.74	-2.14	0.99	-2.61	0.99	-2.82	0.99	-2.97	0.99	-3.01	1.00
10	-.52	-.53	-1.09	.18	-1.73	.86	-2.33	.90	-2.78	.92	-2.99	.94	-3.13	.94	-3.16	.93
12.5	-.52	- - -	-0.99	- - -	-1.50	- - -	-1.99	- - -	-2.38	- - -	-2.81	- - -	-2.66	- - -	-2.70	- - -
15	-.64	-.43	-1.09	.56	-1.58	.66	-2.01	.71	-2.33	.78	-2.45	.82	-2.56	.83	-2.57	.84
20	-.71	-.09	-1.10	.38	-1.52	.48	-1.82	.57	-2.05	.65	-2.14	.71	-2.21	.71	-2.26	.72
25	-.58	.13	-.90	.25	-1.21	.39	-1.44	.50	-1.61	.60	-1.67	.65	-1.71	.66	-1.76	.66
30	-.53	.04	-.81	.14	-1.07	.30	-1.25	.43	-1.38	.52	-1.40	.58	-1.44	.58	-1.49	.58
35	-.51	-.05	-.73	.08	-.96	.24	-1.11	.35	-1.21	.46	-1.22	.51	-1.25	.52	-1.30	.51
40	-.49	-.12	-.68	.01	-.87	.18	-1.00	.30	-1.07	.39	-1.05	.45	-1.09	.46	-1.14	.45
45	-.44	-.14	-.61	-.01	-.77	.14	-.87	.26	-.91	.35	-.89	.41	-.92	.42	-.97	.40
50	-.40	-.14	-.53	-.03	-.66	.13	-.74	.23	-.77	.31	-.73	.37	-.75	.38	-.83	.35
55	-.35	-.14	-.46	-.03	-.56	.12	-.62	.22	-.62	.29	-.59	.35	-.61	.34	-.69	.31
60	-.31	-.13	-.40	-.03	-.48	.10	-.52	.20	-.51	.26	-.46	.31	-.49	.31	-.58	.28
65	-.26	-.10	-.33	-.01	-.39	.10	-.42	.18	-.39	.23	-.40	.30	-.38	.29	-.47	.26
70	-.21	-.09	-.26	0	-.31	.10	-.33	.18	-.30	.23	-.26	.27	-.30	.26	-.40	.22
75	-.17	-.07	-.20	.01	-.23	.10	-.23	.17	-.22	.21	-.19	.24	-.23	.23	-.34	.20
80	-.12	-.04	-.14	.03	-.16	.10	-.16	.17	-.16	.20	-.14	.23	-.20	.21	-.30	.12
85	-.09	-.01	-.09	.04	-.09	.10	-.09	.14	-.10	.17	-.12	.19	-.17	.18	-.26	.15
90	-.05	.01	-.03	.04	-.04	.09	-.04	.13	-.08	.14	.10	.15	-.16	.13	-.22	.09
95	.03	.04	.04	.07	.03	.09	.01	.10	-.03	.09	-.09	.09	-.14	.07	-.21	.01
97.5	.07	.07	.07	.07	.05	.08	.04	.08	-.04	.05	-.09	.04	-.14	0	-.21	-.03

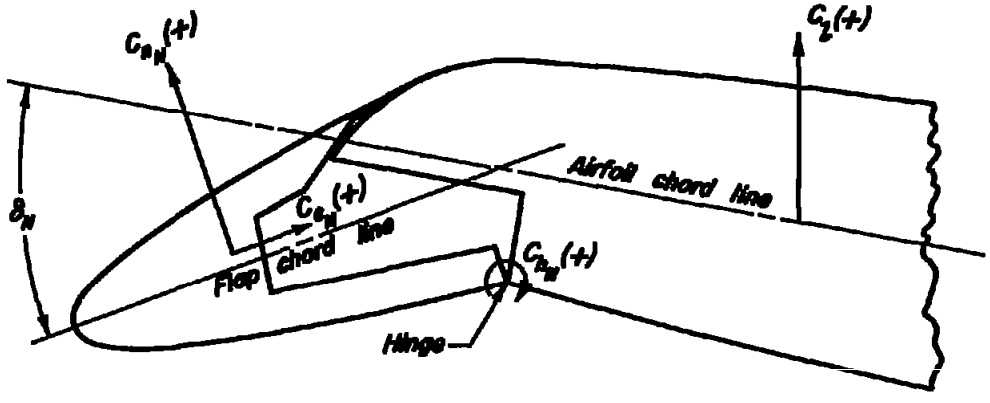

Leading-edge flap

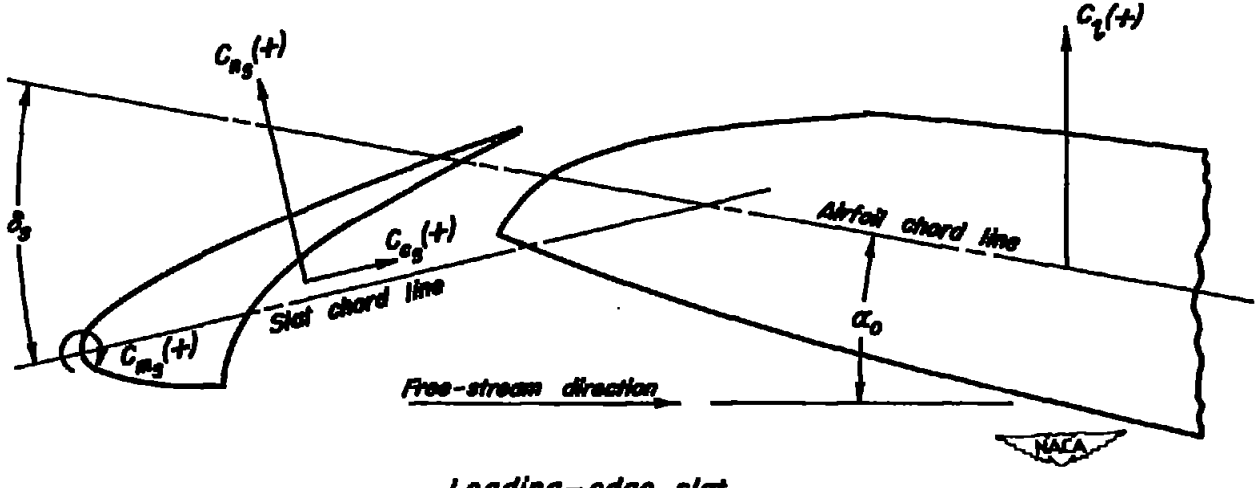

Leading-edge slat

Figure 1.- Sign convention and reference axes for the various force and moment coefficients.

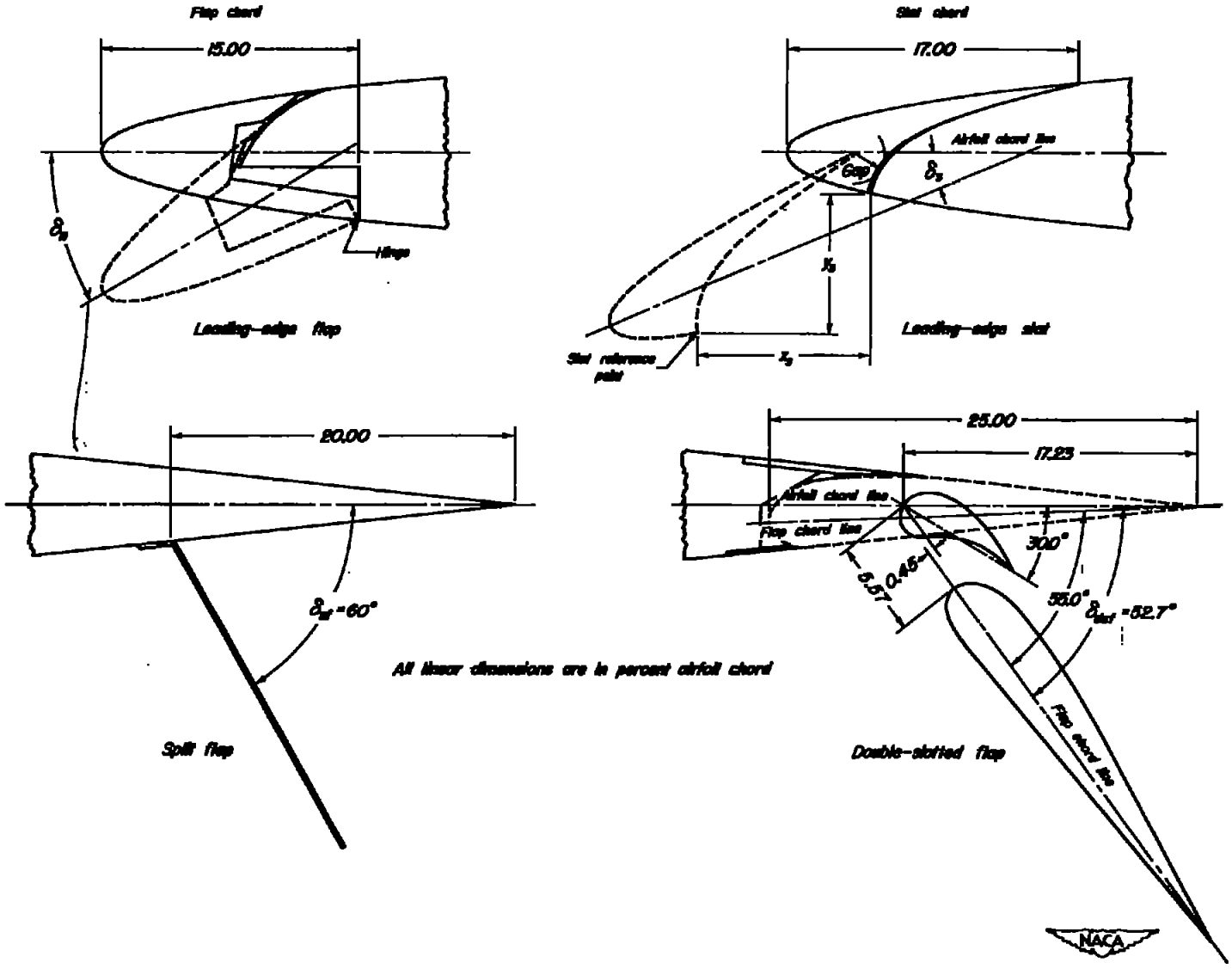

Figure 2.- Geometry and reference dimensions for the various high-lift devices.

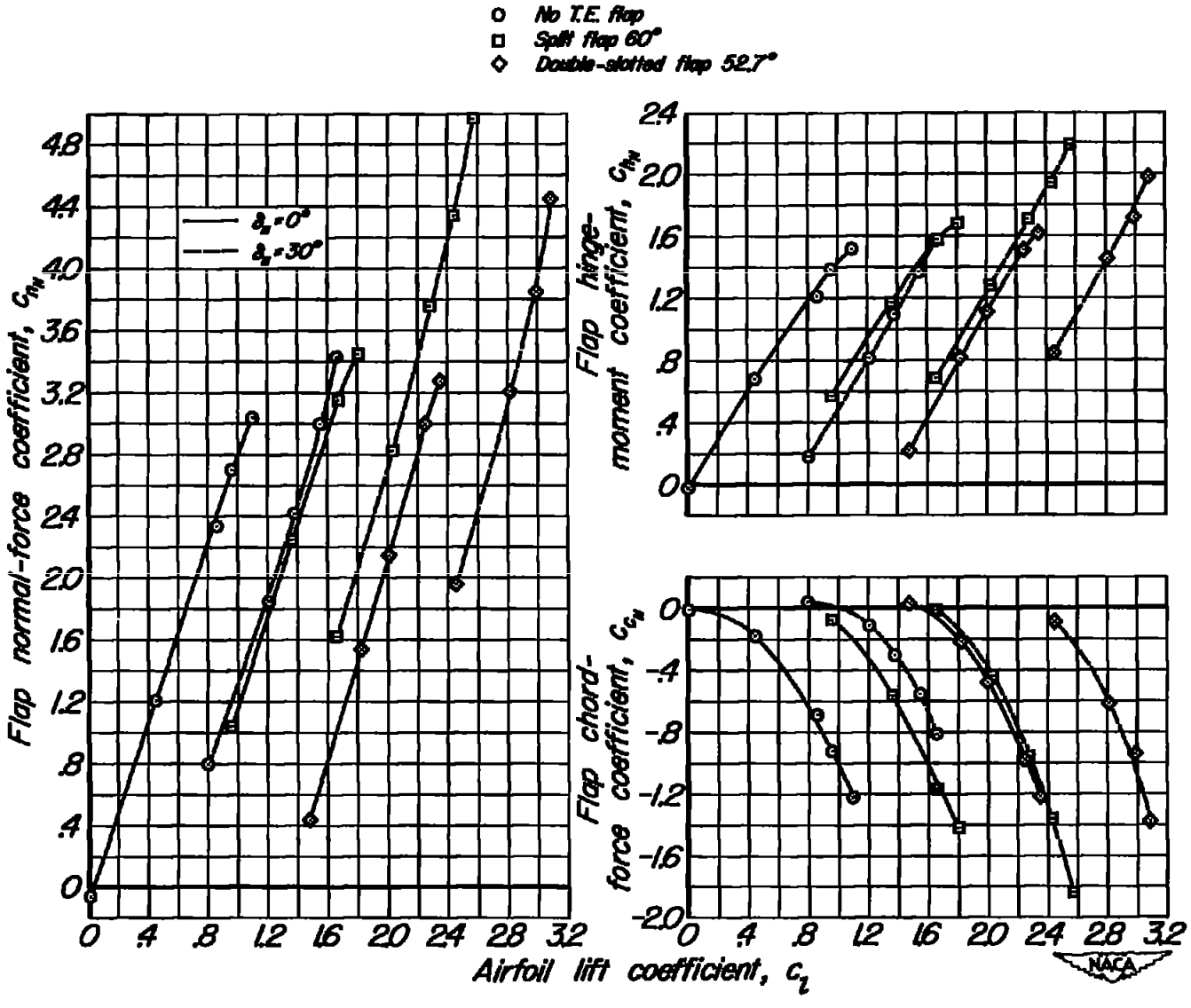

Figure 3.- Section force and moment characteristics of the leading-edge flap.

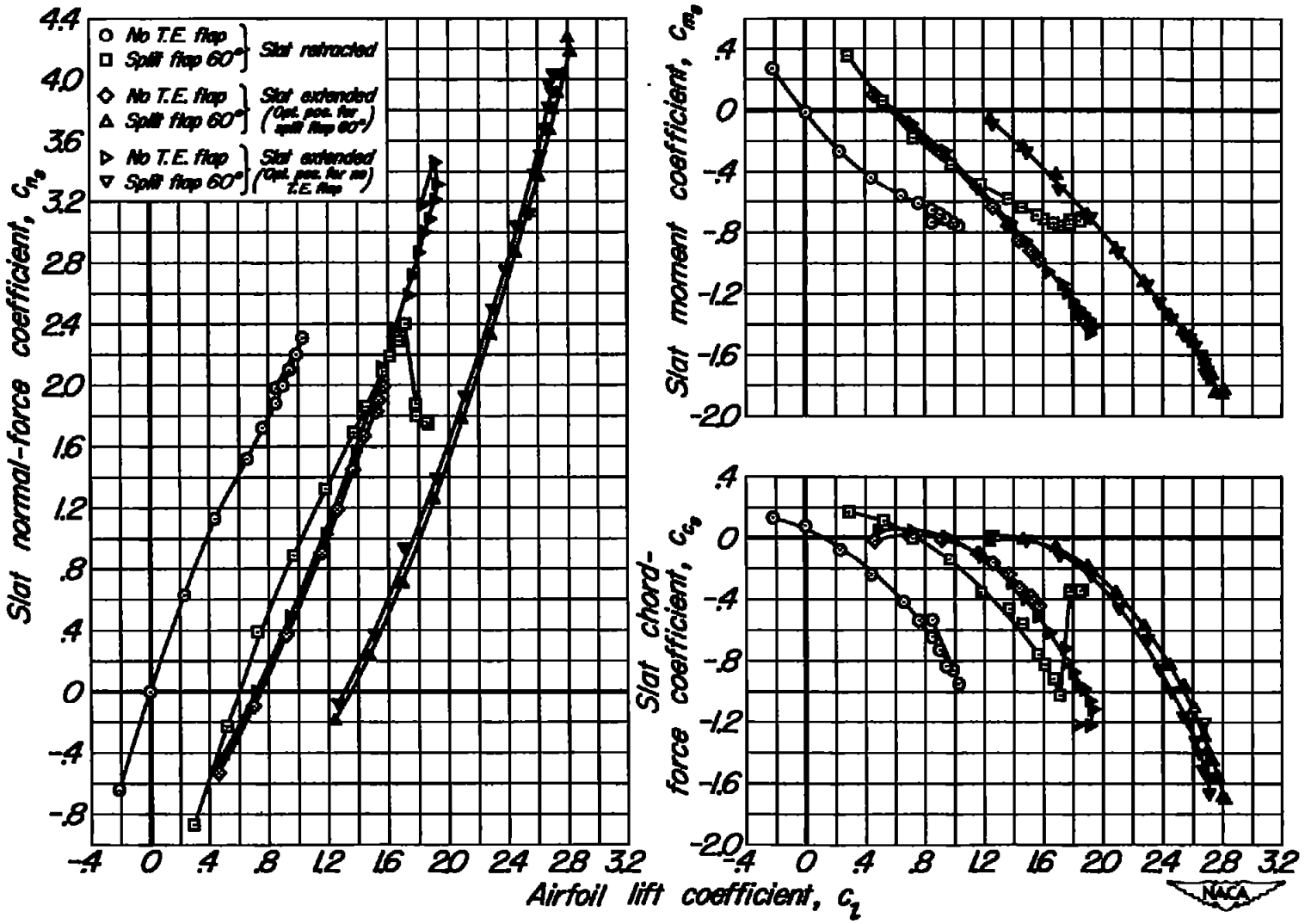

Figure 4.- Section force and moment characteristics for the leading-edge slat; no trailing-edge flap; split flap deflected 60°.

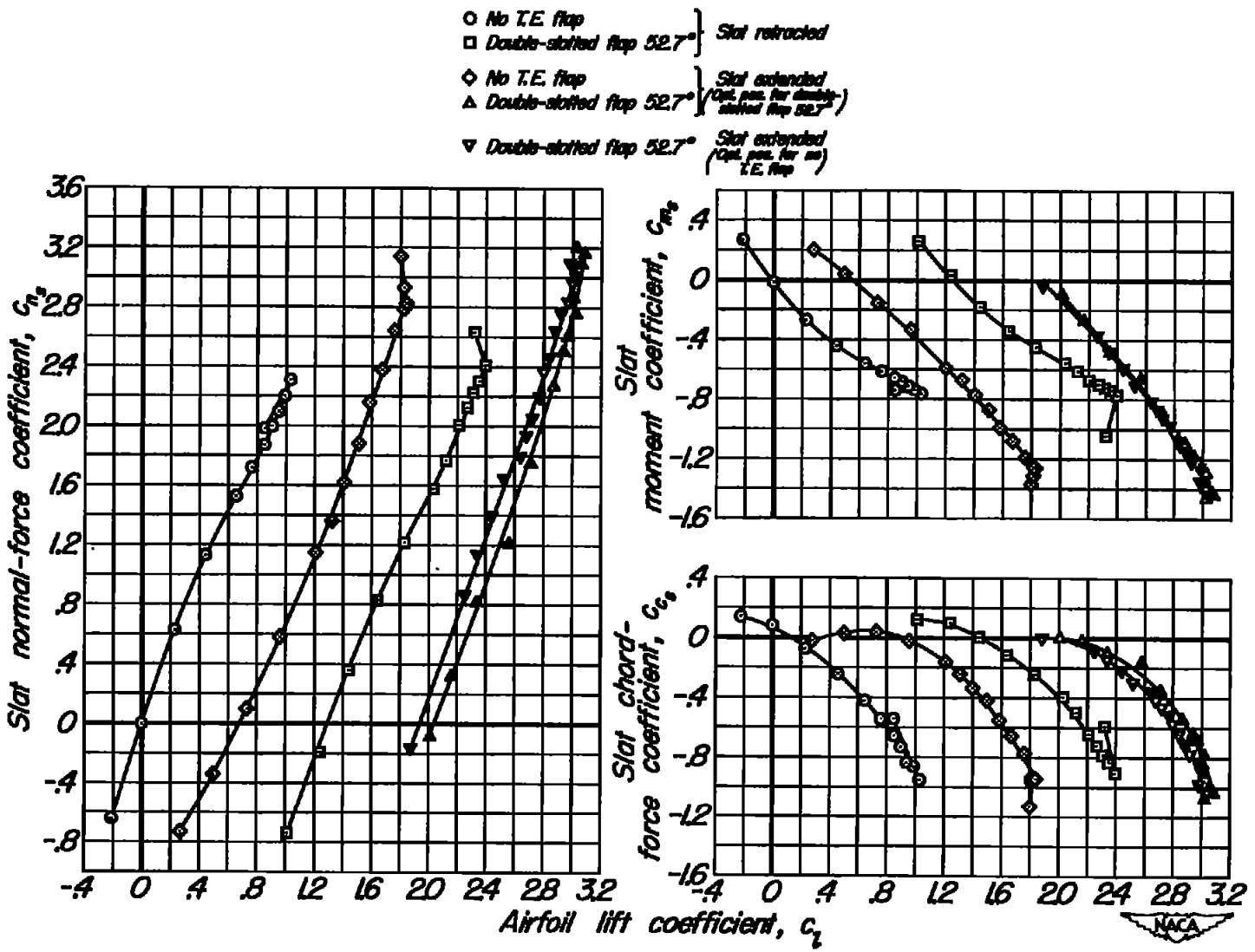

Figure 5.- Section force and moment characteristics for the leading-edge slat; no trailing-edge flap; double-slotted flap deflected 52.7°.

NACA-Langley - 6-24-54 - 1000