93R13458
19930084168
NACA
TN
3455
c.1
NACA TN 3455
9739
TECH LIBRARY KAFB, NM
0066584

NATIONAL ADVISORY COMMITTEE FOR AERONAUTICS

TECHNICAL NOTE 3455

LOAN COPY: RETURN TO
AFWL TECHNICAL LIBRARY
KIRTLAND AFB, N. M.

RECOVERY AND TIME-RESPONSE CHARACTERISTICS OF SIX THERMOCOUPLE PROBES IN SUBSONIC AND SUPERSONIC FLOW

By Truman M. Stickney

Lewis Flight Propulsion Laboratory
Cleveland, Ohio

Washington
July 1955

[redacted]

TECH LIBRARY KAFB, NM
0066584

F

NATIONAL ADVISORY COMMITTEE FOR AERONAUTICS

TECHNICAL NOTE 3455

RECOVERY AND TIME-RESPONSE CHARACTERISTICS OF SIX THERMOCOUPLE PROBES IN SUBSONIC AND SUPERSONIC FLOW

By Truman M. Stickney

SUMMARY

Experimental data were obtained on the recovery characteristics and time constants of three shielded and three unshielded thermocouple probes. The data, which were taken in air at room total temperature over the Mach number and total-pressure ranges of 0.2 to 2.2 and 0.2 to 2.2 atmospheres, respectively, show reproducible systematic variations of recovery with Mach number, ambient pressure, flow angle, and probe design. Time-constant data determined at Mach 0.2 and room temperature and pressure indicate that unshielded probes are several times faster in response to temperature changes than shielded probes.

INTRODUCTION

For temperature measurements involving the immersion of instruments such as thermocouple probes in gas streams, corrections to the indicated temperatures are often necessary, since the probe junction may attain thermal equilibrium at a temperature other than that of the undisturbed gas stream. At low velocities, the equilibrium temperature results from a balance between heat transferred by convection to and from the gas and heat transferred by radiation and conduction to and from the external surroundings. For a gas moving at a high velocity, however, an additional factor becomes important, namely, the aerodynamic heating effect, which is a result of friction in the boundary layer on the probe surfaces and of stagnation at certain points on the probe. The aerodynamic heating on the various probe surfaces is not necessarily uniform; therefore, for probes immersed in high-velocity gas streams, thermal equilibrium must include local heat transfer among different parts of the probe.

When negligible heat transfer to and from external surroundings is assumed, the indication of a thermocouple probe, or adiabatic junction temperature, can be related to the total temperature of the gas stream by the recovery ratio R defined as

$$R = \frac{T}{T_t} \tag{1}$$

(All symbols are defined in the appendix.) The recovery characteristics can also be described by the recovery factor r, defined by

$$r = \frac{T - T_s}{T_t - T_s} \tag{2}$$

The two parameters are related by

$$R = r + \frac{T_s}{T_t}(1 - r) = f(r,M) \tag{3}$$

It has been well established that the recovery factor, and hence the recovery ratio, of a thermocouple probe is affected by probe design, flow angle, and the properties of the gas stream (ref. 1). The external heat-transfer effects will not be considered here; they have been treated in several papers listed in reference 2 and in references 3 and 4.

The dynamic response of a thermocouple probe is generally given in terms of a time constant τ, equal to the time required for the probe to indicate 63 percent of a step change in temperature. The time constant depends upon the probe design, the properties of the gas stream, and the thermocouple wire material (refs. 3 and 4).

Data are presented herein on the recovery ratios and time constants of six thermocouple probes in air at room total temperature for Mach numbers from 0.2 to 2.2, total pressures from 0.2 to 2.2 atmospheres, and various flow angles.

APPARATUS AND PROCEDURE

The recovery ratios were determined in the apparatus shown in figure 1(a). The flow processes in the nozzles and testing regions were isentropic within the accuracy of the pressure and temperature measurements. All tests were made at room total temperature (70° to 100° F). Laboratory dry air was employed for supersonic tests to avoid condensation shocks in the nozzles and testing regions (ref. 5). The close agreement between theoretical and experimental data on total-pressure ratio across normal shock (fig. 1(b)) indicates condensation effects were negligible.

The setup for determining time response is shown in figure 2. Covered with the shield, the probe was heated to a constant temperature with the hot-air blower. A step change in temperature occurred when the shield was suddenly retracted from the jet stream and the blower simultaneously shut off.

Figures 3 and 4 show the six probe sensing elements with their adjacent supports. The indicated tolerances are those which can be expected in the fabrication of such instruments.

The probable error in total temperature was $\pm 1^{\circ}$ F. Temperature differences were measured with a probable error of $\pm 0.1^{\circ}$ F. Pitch and yaw angles were measured with a probable error of $\pm 1/2^{\circ}$. Errors in pressure measurements were negligible.

RESULTS

Recovery ratios of the six probes are plotted in figure 5 as a function of Mach number for the reference condition of 1 atmosphere total pressure and zero angles of pitch and yaw. (See fig. 1(a) for definitions of pitch and yaw.) Other recovery data reported in the literature (refs. 6 to 8) are also indicated in figure 5(a). The data quoted from references 6 and 7 are for a static pressure of 1 atmosphere.

In the subsonic range, the number of samples was so large that no data points are shown; hence, cross-hatching is used to indicate the range of variation among samples. The boundaries of the cross-hatching denote the maximum random variations in probe recovery ratio due to the dimensional tolerances given in figure 4.

The data on probable values of recovery ratio as detailed in figure 5 are summarized in figure 6.

Data on the effects of total pressure, yaw angle, and pitch angle are presented in figures 7, 8, and 9, respectively; table I gives the time constants of the six probes.

DISCUSSION OF RESULTS

Recovery Ratio

Previously reported results (refs. 6 and 7) are confirmed in figure 5(a), in which the recovery ratio of probe 1 is similar to that of a long wire (length-to-diameter ratio > 50) for a Mach number less than 0.5. However, the dip at a Mach number of approximately 0.75 shown by the long wire does not occur with the probe.

The recovery of probe 5 (fig. 5(e)) resembles that for laminar flow over a flat plate for a considerable portion of the subsonic region.

Data taken in the two supersonic test sections shown in figure 1 agree. The solid points in figure 5 were taken in unit II. In the supersonic region, for the unshielded probes 1, 2, and 3, one of two conditions is possible: (1) the thermocouple junction may be downstream of a bow shock produced by the probe support; or (2) the thermocouple junction may be located upstream of the bow shock produced by the probe support.

The effect of shock displacement on recovery is seen to be large for probe 2 (fig. 5(b)). When the junction remains downstream of the bow shock, the recovery-ratio curve shows a smooth continuation of the subsonic curve. When the thermocouple junction breaks through and extends upstream of the bow shock, the recovery ratio falls abruptly. Obviously, the probe designer should try to avoid the break-through point.

The correlation between the break in the recovery-ratio curve and the bow-wave location is most clearly indicated in figures 5(b) and 10. Figure 10 shows the bow-wave location upstream of a transverse cylinder as determined from figure 7 of reference 9 and figure 5 of reference 10, assuming isentropic flow on the cylinder. For the design of probe 2 (fig. 4(b)), the break-through should occur at $M = 1.63$; the experimental data of figure 5(b) yield this same value. For a junction located near the end of a transverse cylinder, a break-through at a lower Mach number is to be expected because of the curvature of the bow wave; figure 5(b) confirms this expectation qualitatively. The inset in figure 10 is a schlieren photograph of flow at $M = 1.4$ over a rake using probe elements of the design of figure 4(b). The measurements indicated on the photograph yield the data point, which shows good agreement with the theoretical curve.

Similar reasoning appears applicable to the data of figure 5(c), although analytical treatment of this case is difficult because of the complex geometry involved. However, reference 9 predicts, for a simple truncated-cone-cylinder configuration, a break-through value which appears consistent with the experimental data.

Figure 6 shows that the shielded probes have higher recovery than the unshielded probes at the reference conditions over the full range of Mach number. The shielded probes also show smaller variations of recovery with probe design.

Reproducibility of Recovery Ratio at Reference Conditions

If the 0.1° F measurement errors are neglected, the probable error due to manufacturing tolerances δR_0 may conveniently be taken as one-half the maximum variation from the mean line indicated by the cross-hatching. This probable error is very nearly proportional to Mach

number in subsonic flow (fig. 5) except for probe 1 at $M > 0.8$. At $M = 0.8$, δR_0, in percent of total temperature, ranges from 0.06 for probes 2 and 6 to 0.14 for probe 3. The average δR_0 for all probes is 0.1 and 0.05 percent of total temperature at $M = 0.8$ and 0.4, respectively.

Time of Response

Table I shows the results of time-constant tests using the apparatus of figure 2. The tests were conducted at $M = 0.22$, 1 atmosphere static pressure, and room temperature. The time constant τ for probe 1 is compared with time constants of three sizes of wire given by equation (27) of reference 4.

If the Nusselt number of a body immersed in a gas stream is proportional to the square root of the Reynolds number, the time constant for the body can be related to the free-stream properties by the following equation (ref. 3):

$$\frac{\tau_0}{\tau} = \sqrt{\left(\frac{M}{M_0}\right)\left(\frac{p}{p_0}\right)}\left(\frac{T}{T_0}\right)^{0.18} \tag{4}$$

The values of τ_0 given in table I are for the following reference conditions:

Mach number, M_0 . . . . . 1.0
Static pressure, p_0, atm 1
Temperature, T_0, $^{\circ}R$ 519

Equation (4) may not be correct for all probe designs. It does not account for local flow effects that may be encountered within shielded probes. However, reference 4 shows the equation to be valid for unshielded wires mounted in crossflow for Reynolds numbers from 250 to 30,000 and Mach numbers from 0.1 to 0.9. Table I shows that the computed values of τ_0 for probes 1 and 2 agree with those reported for similar probes in reference 3. Time-constant information in the supersonic flow range was not determined.

Departures from Reference Conditions

Figures 7, 8, and 9 show systematic variations in the recovery-ratio data of figure 6 due to changes of total pressure, yaw angle, and

pitch angle, respectively. These curves were obtained by averaging the subsonic performance of five samples of each probe. The function $\frac{R_0 - R}{1 - R_0}$ was chosen as the ordinate, since it makes the effects of pressure and angle nearly independent of Mach number in subsonic flow. It is the fractional variation of $1 - R$ and is equivalent to the fractional variation of $T_t - T$. For a particular Mach number, $\frac{R_0 - R}{1 - R_0} = \frac{r_0 - r}{1 - r_0}$ from equation (3). The probable error in $\frac{R_0 - R}{1 - R_0}$ was approximately 15 percent of the given values in all cases, or $\delta\left(\frac{R_0 - R}{1 - R_0}\right) \approx 0.15\left(\frac{R_0 - R}{1 - R_0}\right)$.

The effects of ambient pressure at zero angle and constant Mach number are shown in figure 7. It should be noted that at room temperature the indicated systematic errors amount to, at most, 3° F. An ordinate value of 0.8 means that the difference between total and indicated temperature is 80 percent higher than the difference at the reference flow condition. On this percentage basis, the shielded probes are much more sensitive to pressure changes than the unshielded probes. Probe 1 shows a variation which agrees with that found for long wires (ref. 6) up to $M = 0.70$; for all five samples the pressure effect was negligible in the interval Mach 0.75 to 1.00. Tests on a single sample of probe 1 indicated no pressure effect between $M = 1.3$ and 2.2. Probes 2 to 6 show decreasing recovery ratio with decreasing pressure in subsonic flow. Single samples of probes 4 to 6 indicated the same pressure effect in supersonic flow. The dashed curves indicate that the effect of pressure on the recovery ratios of the six probes can be approximated by algebraic expressions of the form $(H/H_0)^n - 1$ (fig. 7) where n is an empirically determined constant.

The effect of yaw angle on the recovery of probes 4 to 6 can be approximated by the function $\tan^2 \psi$ (fig. 8). Probe 3 is generally positioned to a condition of zero pressure differential between the two balance tubes (fig. 4(c)) so that it is closely alined with the flow in the yaw direction. Probe 1 again shows a performance change in the vicinity of $M = 0.75$; however, the variations are small. The upper curve also indicates the yaw effect of a single sample of probe 1 run at Mach 2.2.

Variations in the performance of probes 3, 5, and 6 with pitch angle were negligible over the range zero to 15°. Some variations, caused by the probe support, were noted for probes 1, 2, and 4 (fig. 9).

The effect of flow angle on the recovery of shielded probes in supersonic flow may not be well represented by figures 8 and 9 if the shield "swallows" the bow shock. This process is shown by shadowgraphs in reference 11.

The effect of absolute temperature level on steady-state recovery ratio was not determined. However, reference 6 indicates that the temperature effect on long wires in crossflow is given by the empirical relation

$$\frac{R_0 - R}{1 - R_0} = \left(\frac{T_0}{T}\right)^{0.25} - 1$$

Application to Temperature Data Reduction

All six probes read less than total temperature by an amount that varied systematically with Mach number, ambient pressure, and flow angle. In general, the Mach number effect was predominant. However, the shielded probes showed a sizable pressure effect over the range investigated. For probes such as 5 and 6, the effects of flow angle can be neglected for many applications, and the systematic variations can be lumped into a single family of recovery-ratio curves.

A sample computation of the recovery ratio and its probable error are given in table II for probe 6 for $M = 0.6$ and a total pressure of 2 atmospheres.

CONCLUSIONS

The recovery ratio of a thermocouple probe shows systematic variations with Mach number, ambient pressure, and flow angle and has a random error due to imperfect reproducibility in fabrication. On the average, the probable error due to imperfect reproducibility is proportional to the Mach number in subsonic flow and is about 0.1 percent of total temperature at Mach 0.8.

Shielded probes show higher recovery ratios for most flow conditions. Unshielded probes, however, are less sensitive to pressure changes and exhibit much faster response to temperature changes.

An important design criterion for probes to be used in supersonic flow is that the thermocouple junction should not be crossed by strong compression shocks generated by the probe over the required range of Mach number.

Lewis Flight Propulsion Laboratory
National Advisory Committee for Aeronautics
Cleveland, Ohio, April 20, 1955

APPENDIX - SYMBOLS

The following symbols are used in this report:

D support diameter

H total pressure

M free-stream Mach number

p free-stream static pressure

R recovery ratio

r recovery factor

T adiabatic junction temperature, $^{\circ}R$ or $^{\circ}K$

T_s static temperature, $^{\circ}R$ or $^{\circ}K$

T_t total temperature, $^{\circ}R$ or $^{\circ}K$

X shock displacement

δ probable error of . . .

τ time constant

ψ yaw angle

Subscript:

0 reference conditions

REFERENCES

1. Johnson, H. A., and Rubesin, M. W.: Aerodynamic Heating and Convective Heat Transfer - Summary of Literature Survey. Trans. A.S.M.E., vol. 71, no. 5, July 1949, pp. 447-456.

2. Freeze, Paul D.: Bibliography on the Measurement of Gas Temperature. Circular 513, Nat. Bur. Standards, Aug. 20, 1951.

3. Scadron, Marvin D., Warshawsky, Isidore, and Gettelman, Clarence C.: Thermocouples for Jet-Engine Gas Temperature Measurement. Proc. Instr. Soc. Am., Paper No. 52-12-3, vol. 7, 1952, pp. 142-148.

4. Scadron, Marvin D., and Warshawsky, Isidore: Experimental Determination of Time Constants and Nusselt Numbers for Bare-Wire Thermocouples in High-Velocity Air Streams and Analytic Approximation of Conduction and Radiation Errors. NACA TN 2599, 1952.

5. Heybey, W. H., and Reed, S. G., Jr.: Condensation Shocks, Weak Detonations, and Related Phenomena. NAVORD Rep. 2779, Aeroballistic Res. Rep. 156, U.S. Naval Ord. Lab., June 8, 1953. (Bur. Ord. (NOL-Re9a-108-1-53).)

6. Simmons, Frederick S.: Recovery Corrections for Butt-Welded, Straight-Wire Thermocouples in High-Velocity, High-Temperature Gas Streams. NACA RM E54G22a, 1954.

7. Eckert, E., and Weise, W.: The Temperature of Unheated Bodies in a High-Speed Gas Stream. NACA TM 1000, 1941.

8. Eber: Experimental Investigation of the "Brake" Temperature and the Heat Transfer on Simple Bodies at Supersonic Speeds, Pt. I. Rep. No. 337, Douglas Aircraft Co., Inc. (Santa Monica Plant.)

9. Moeckel, W. E.: Approximate Method for Predicting Form and Location of Detached Shock Waves Ahead of Plane or Axially Symmetric Bodies. NACA TN 1921, 1949.

10. Gowen, Forrest E., and Perkins, Edward W.: Drag of Circular Cylinders for a Wide Range of Reynolds Numbers and Mach Numbers. NACA TN 2960, 1953. (Supersedes NACA RM A52C20.)

11. Werner, Frank D., Keppel, Robert E., and Bernards, M. A.: Design and Performance Studies for Improved Multiple-Shielded Total Temperature Probes. WADC Tech. Rep. 53-194, Equipment Lab., Wright Air Dev. Center, Wright-Patterson Air Force Base, Apr. 1953. (Contract AF 33(938)30036, RDO No. 655-1611.)

12. Scadron, Marvin D., Gettelman, Clarence C., and Pack, George J.: Performance of Three High-Recovery-Factor Thermocouple Probes for Room-Temperature Operation. NACA RM E50I29, 1950.

13. Eber, G. R.: Recent Investigation of Temperature Recovery and Heat Transmission on Cones and Cylinders in Axial Flow in the N.O.L. Aeroballistics Wind Tunnel. Jour. Aero. Sci., vol. 19, no. 1, Jan. 1952, pp. 1-6.

TABLE I. - TIME-CONSTANT RESULTS

Probe	Wire (a)	Wire diameter, in.	τ		τ_0	
			Observed	Eq. (27) of ref. 4	Computed, eq. (4)	Ref. 3
1	I-C	0.020	0.4	0.43	0.2	0.2
1	C-A	0.013	---	0.27	---	---
1	I-C	0.010	---	0.16	---	0.1
2	C-A	0.013	0.34	----	0.16	0.1-0.2
3	I-C	0.010	0.16	----	0.07	---
4	I-C	0.013	0.8	----	0.4	---
5	I-C	0.010	0.9	----	0.4	---
6	I-C	0.010	0.8	----	0.4	---

[a]Iron-constantan, I-C; chromel-alumel, C-A.

TABLE II. - SAMPLE COMPUTATION OF RECOVERY RATIO AND ITS PROBABLE ERROR DUE TO DESIGN TOLERANCES

[Probe 6 at $M = 0.6$ and $H = 2$ atm; flow-angle effects neglected.]

Computation	Source
(1) $R_0 = 0.9960$	Fig. 5(f) or 6
(2) $(1 - R_0) = 0.0040$	1 - (1)
(3) $\frac{R_0 - R}{1 - R_0} = -0.41$	Fig. 7
(4) $(R_0 - R) = -0.0016$	(2)×(3)
(5) $R = 0.9976$	(1) - (4)
(6) $\delta R_0 = \pm 0.0005$	Fig. 5(f)
(7) $\frac{\delta(1 - R_0)}{(1 - R_0)} = \pm 0.13$	(6)/(2)
(8) $\frac{\delta\left(\frac{R_0 - R}{1 - R_0}\right)}{\left(\frac{R_0 - R}{1 - R_0}\right)} = \pm 0.15$	Tests
(9) $\frac{\delta(R_0 - R)}{(R_0 - R)} = \pm 0.20$	$\sqrt{(7)^2 + (8)^2}$
(10) $\delta(R_0 - R) = \pm 0.0003$	(4)×(9)
(11) $\delta R = \pm 0.0006$	$\sqrt{(6)^2 + (10)^2}$
$R = 0.9976 \pm 0.0006$	

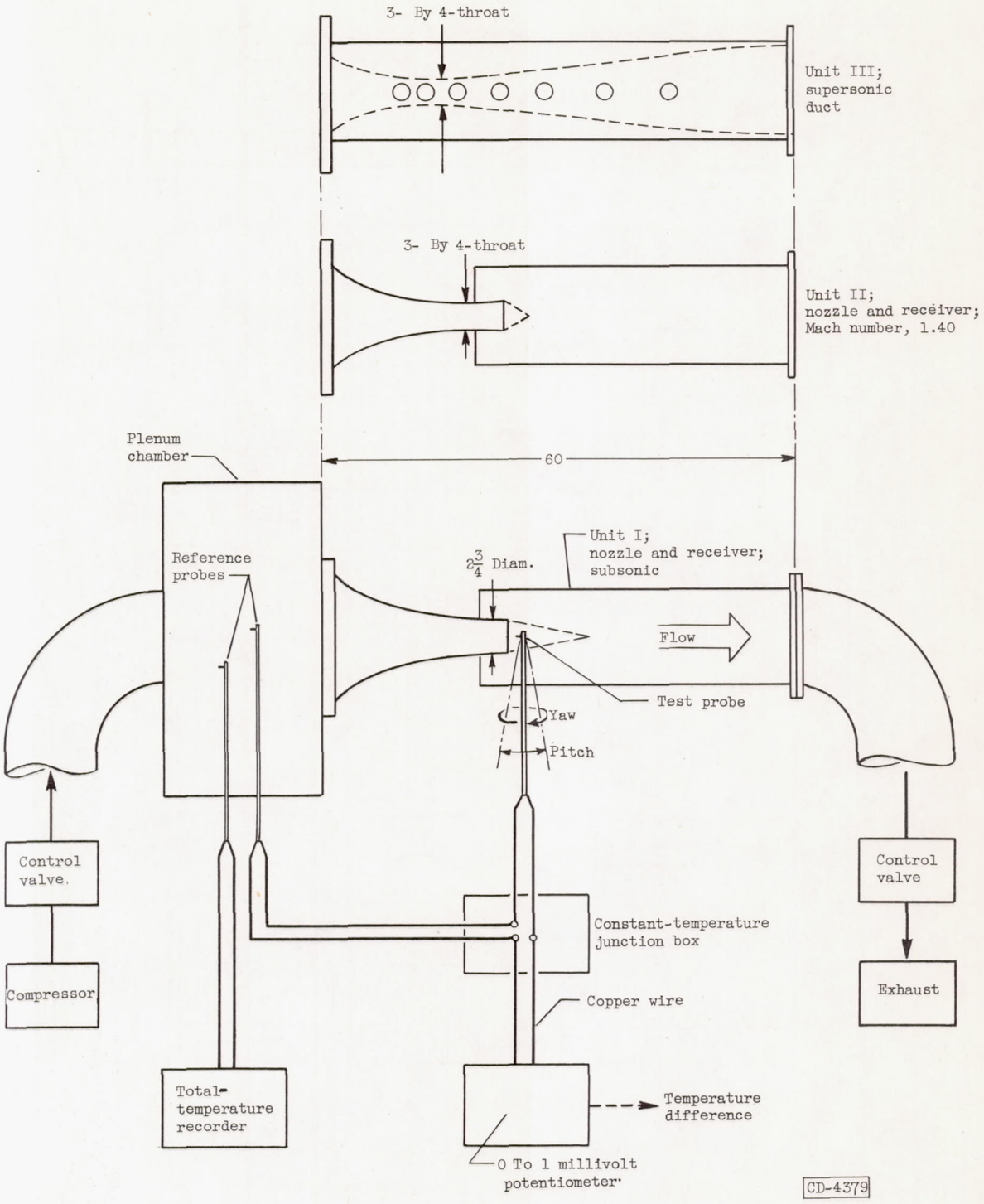

(a) Schematic diagram, showing interchangeable flow units.

Figure 1. - Recovery apparatus. (All dimensions in inches.)

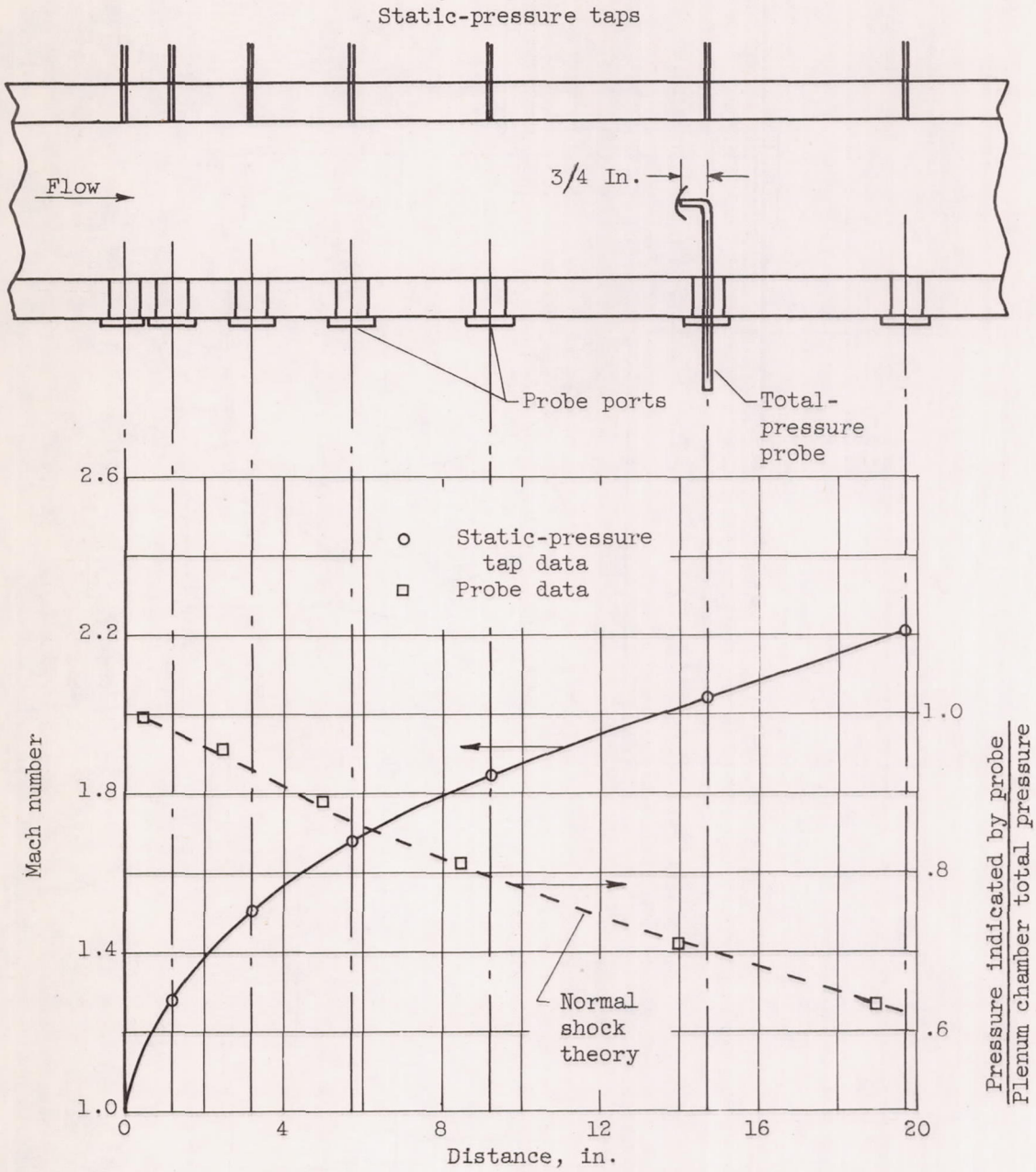

(b) Calibration of supersonic duct, unit III.

Figure 1. - Concluded. Recovery apparatus.

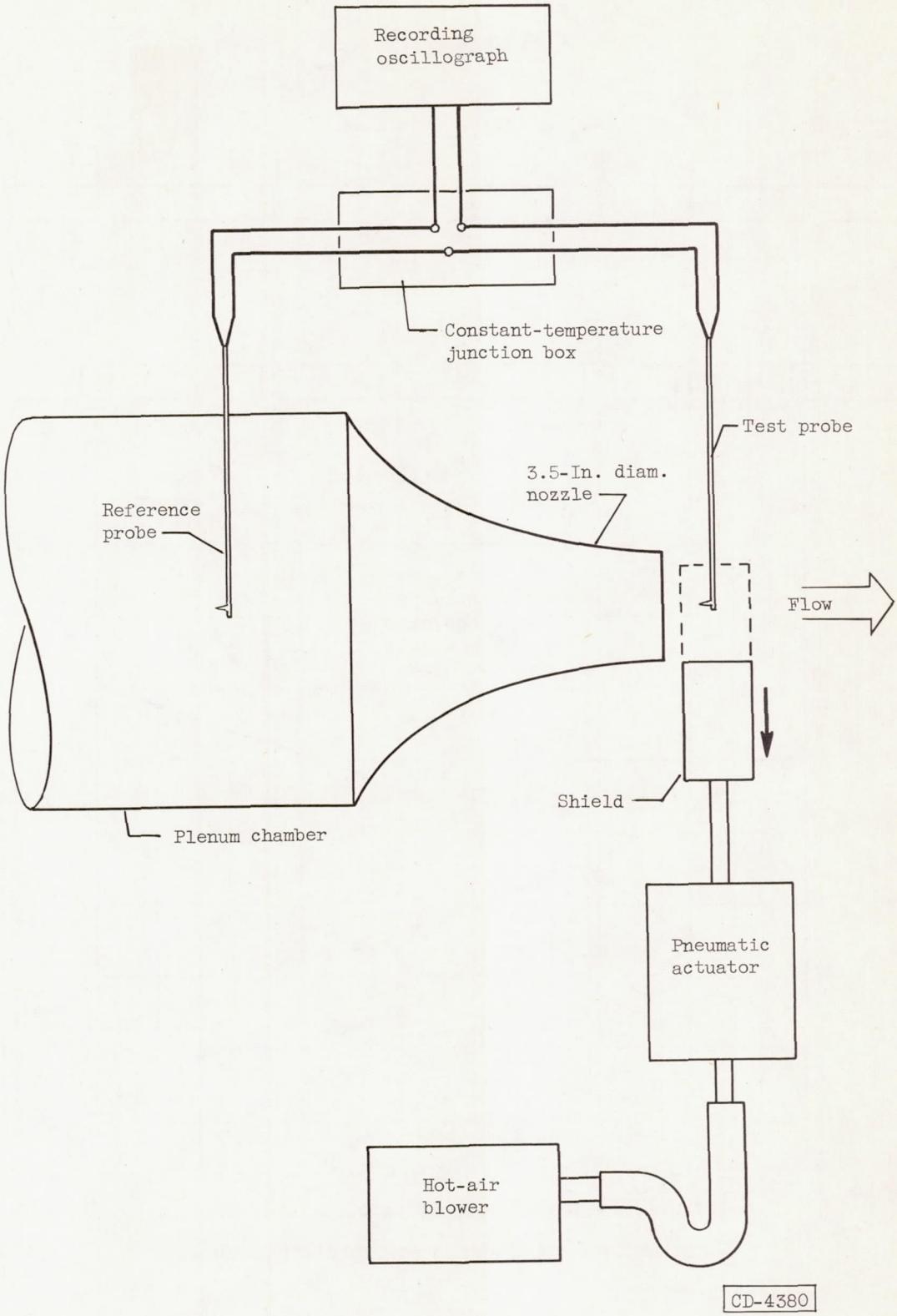

Figure 2. - Time-response apparatus.

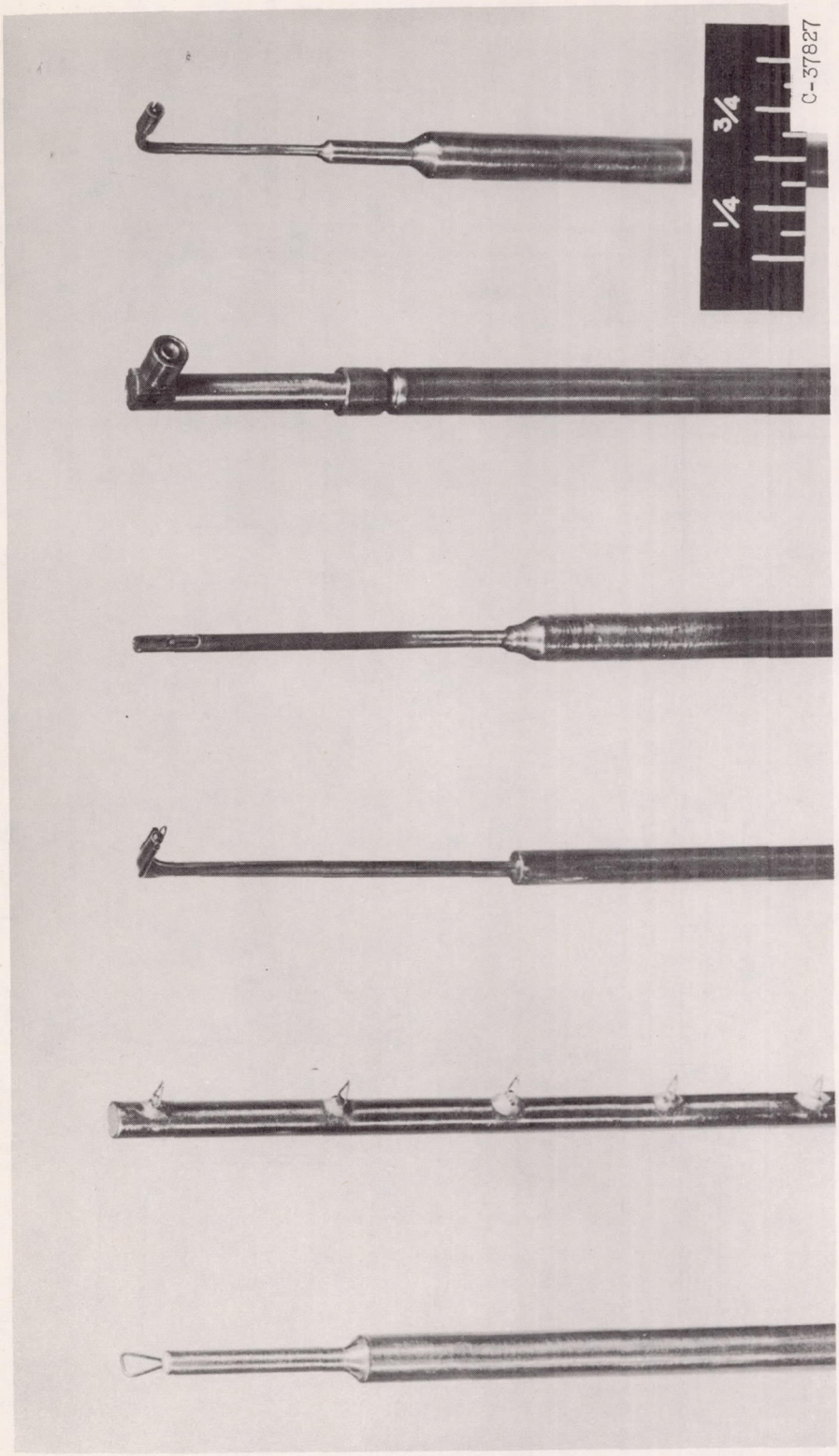

Figure 3. - Probes tested.

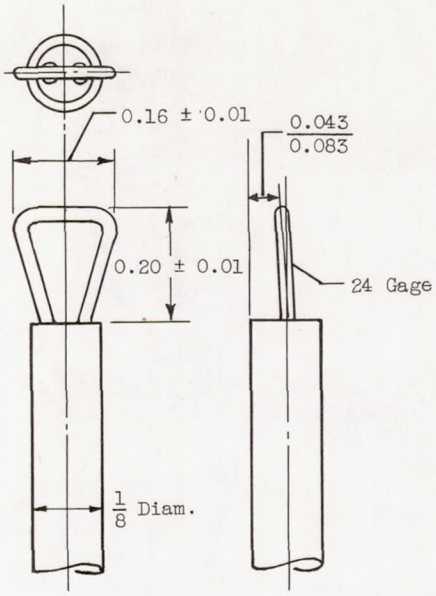

(a) Probe 1.

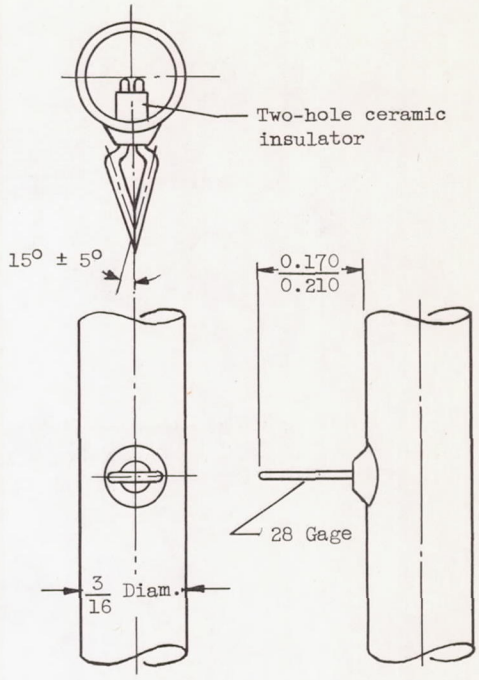

(b) Probe 2.

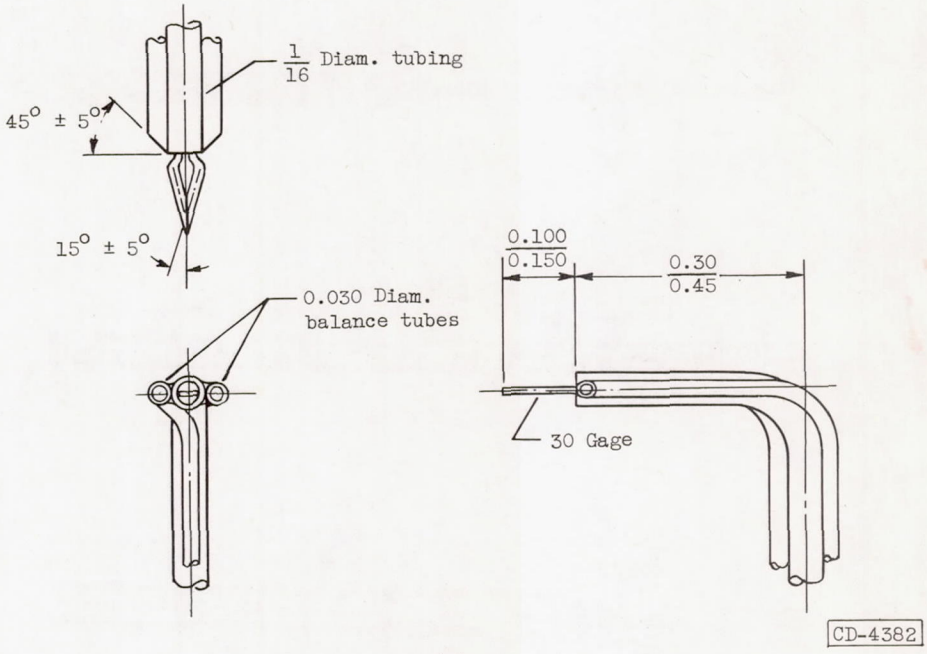

(c) Probe 3.

Figure 4. - Probe details. Tubing diameters given in nominal size; wire sizes in American wire gage. (All dimensions in inches.)

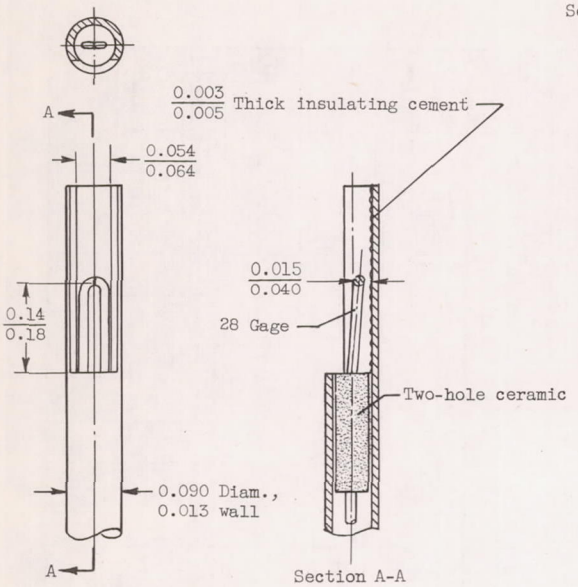

(d) Probe 4.

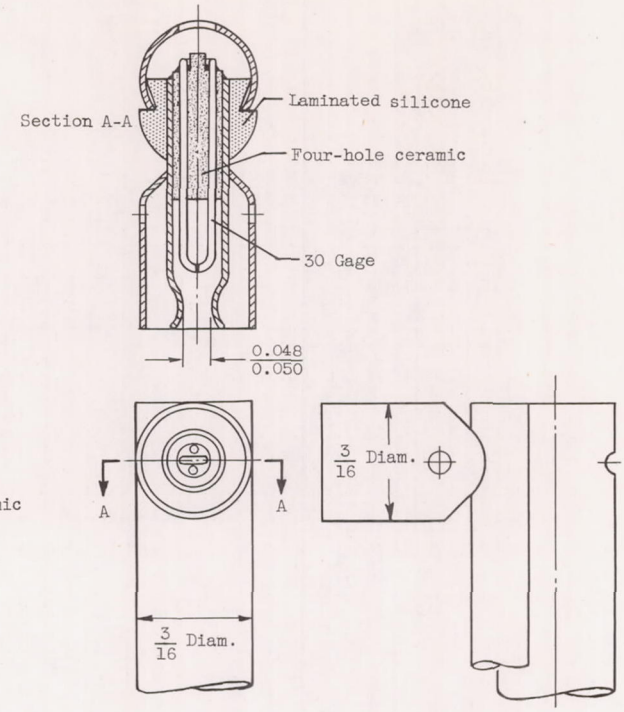

(e) Probe 5 (see also ref. 12).

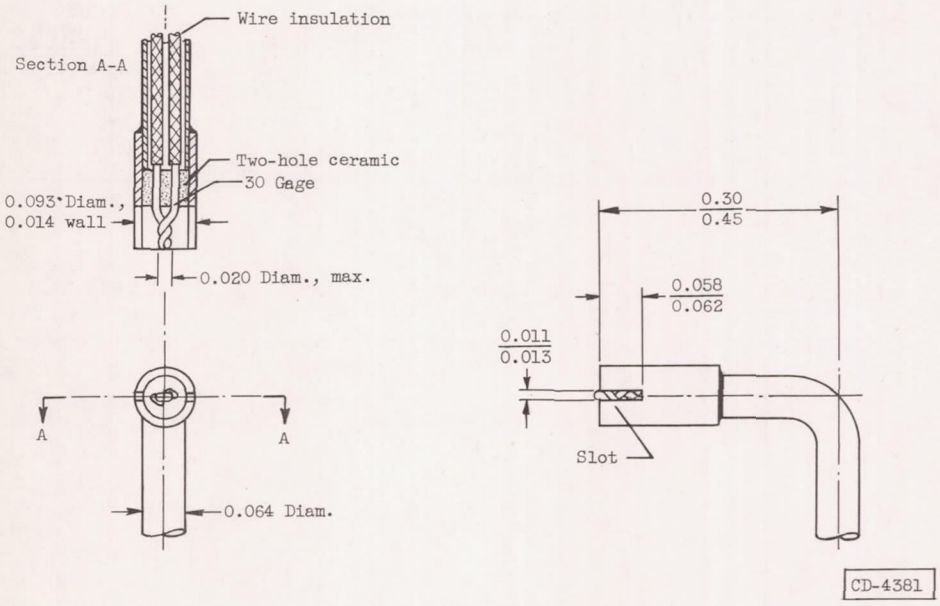

(f) Probe 6.

Figure 4. - Concluded. Probe details. Tubing diameters given in nominal size; wire sizes in American wire gage. (All dimensions in inches.)

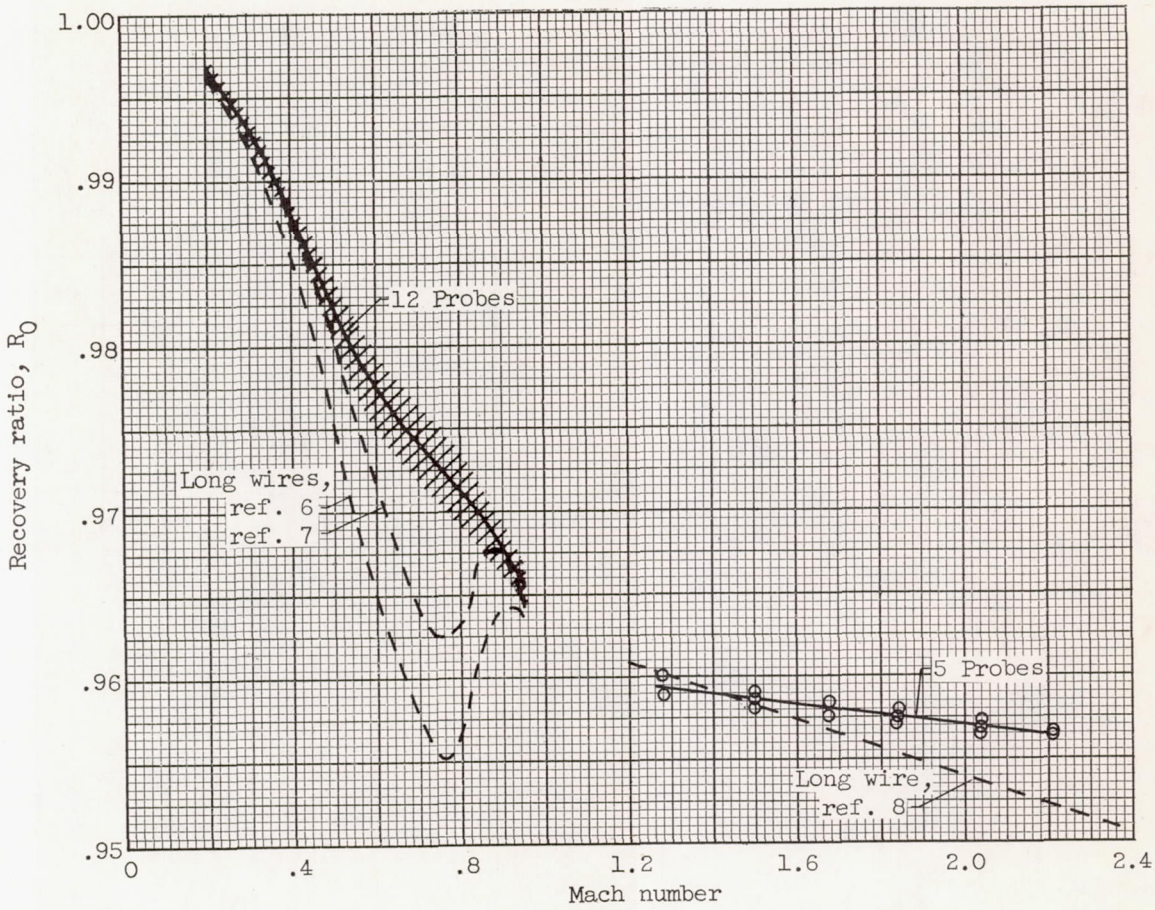

(a) Probe 1. 0.020-Inch diameter wires mounted in crossflow.

Figure 5. - Recovery ratio as function of free-stream Mach number at reference conditions.

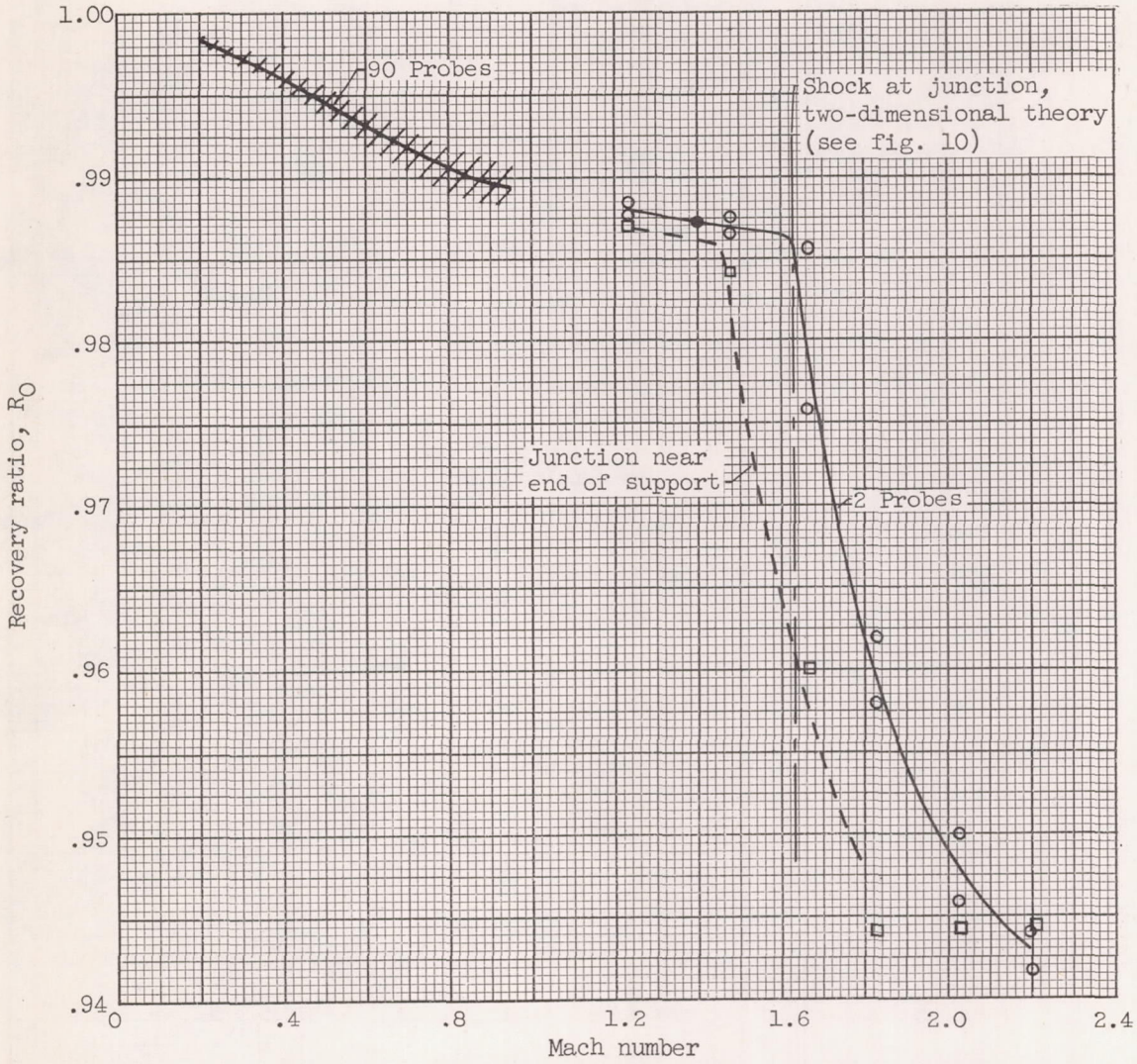

(b) Probe 2.

Figure 5. - Continued. Recovery ratio as function of free-stream Mach number at reference conditions.

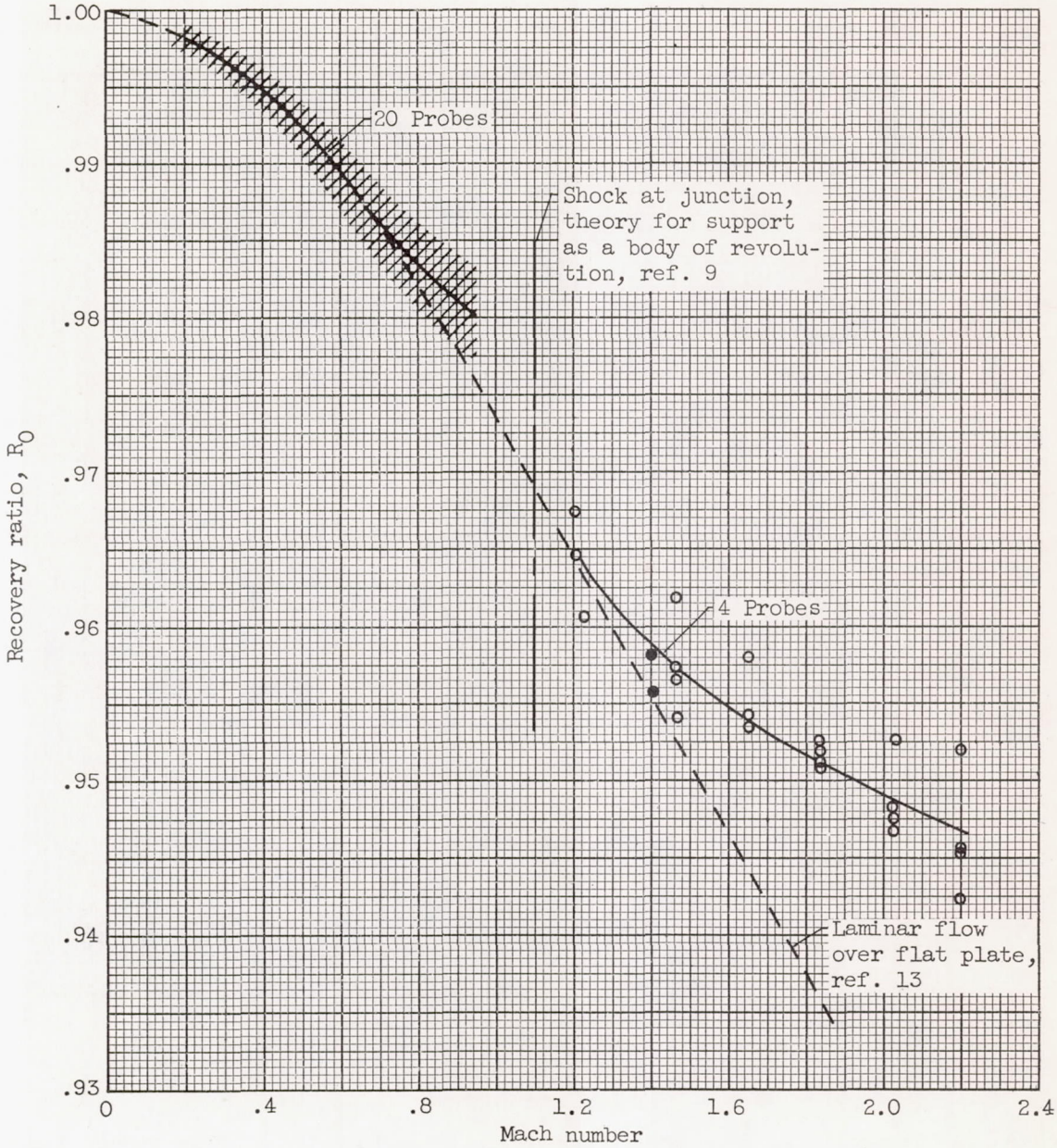

(c) Probe 3.

Figure 5. - Continued. Recovery ratio as function of free-stream Mach number at reference conditions.

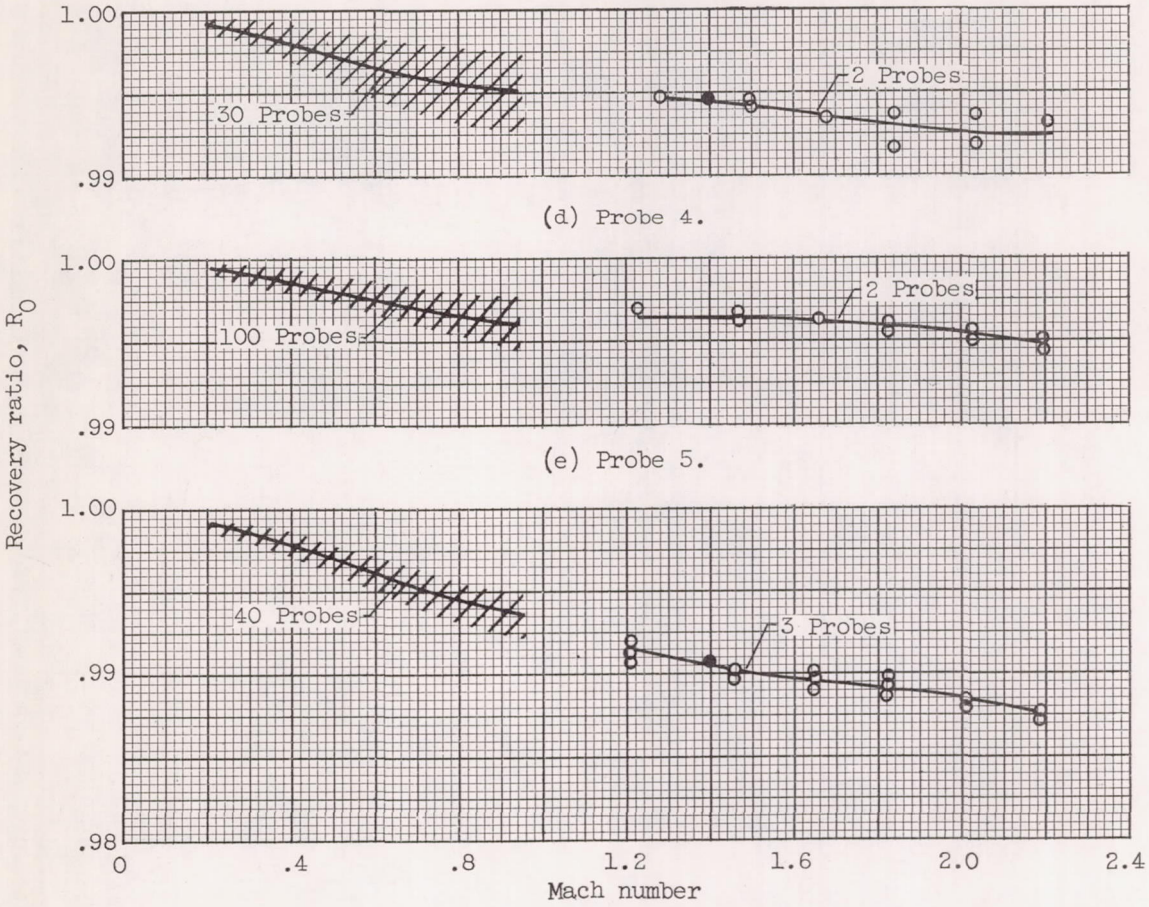

(f) Probe 6.

Figure 5. - Concluded. Recovery ratio as function of free-stream Mach number at reference conditions.

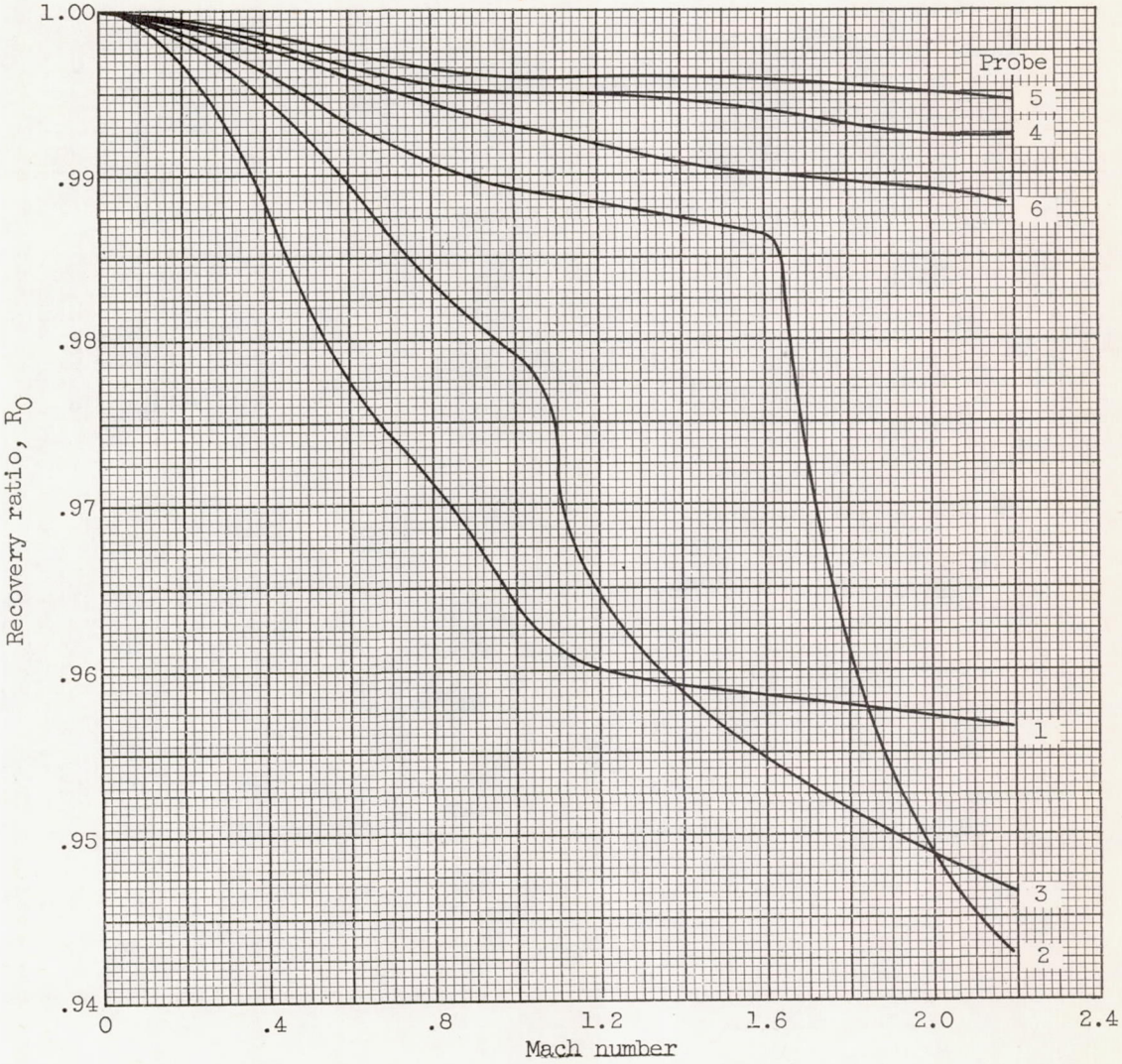

Figure 6. - Probable recovery characteristics at reference conditions.

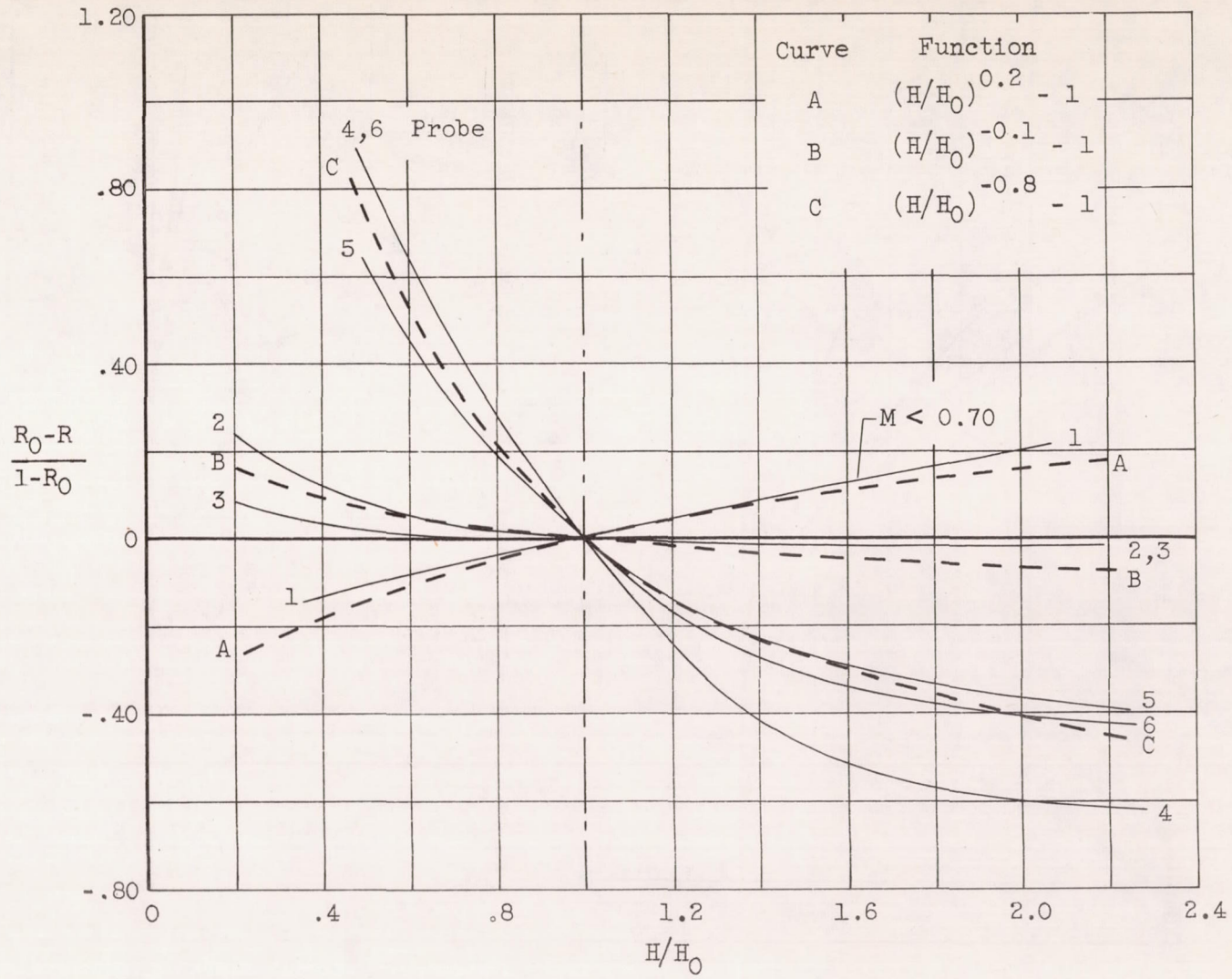

Figure 7. - Variation of recovery ratio with total pressure at zero angle of attack.

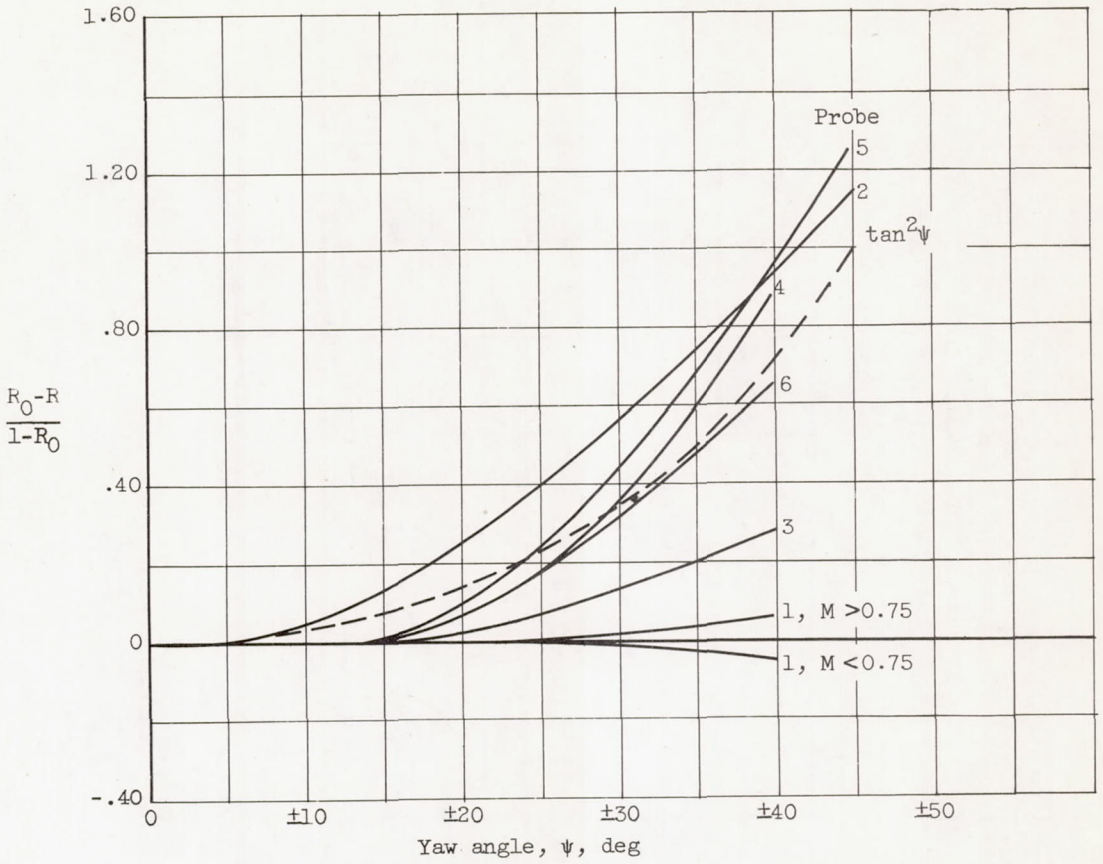

Figure 8. - Variation of recovery ratio with yaw angle at 1 atmosphere total pressure and zero pitch angle.

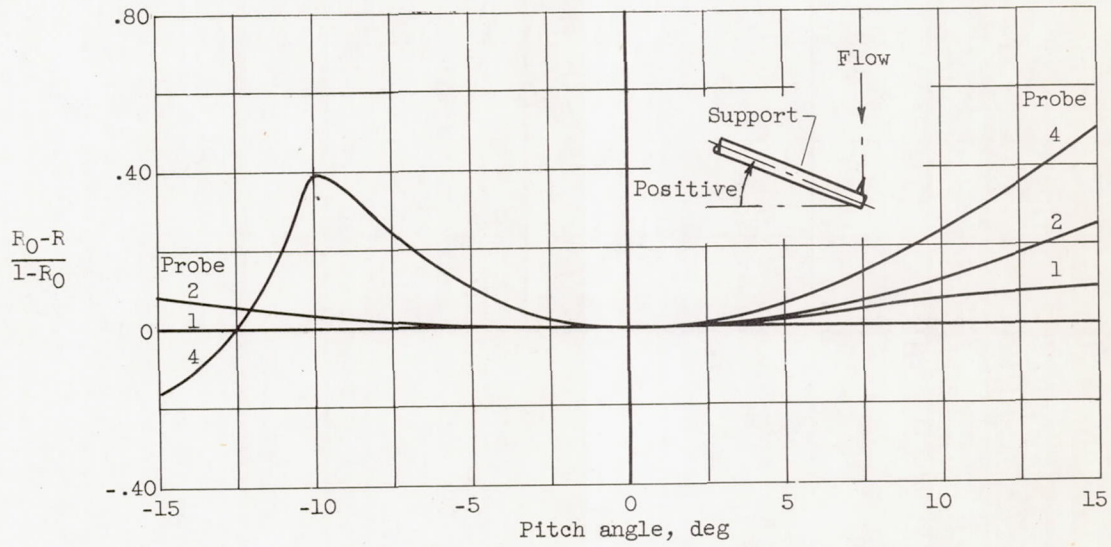

Figure 9. - Variation of recovery ratio with pitch angle at 1 atmosphere total pressure and zero yaw angle.

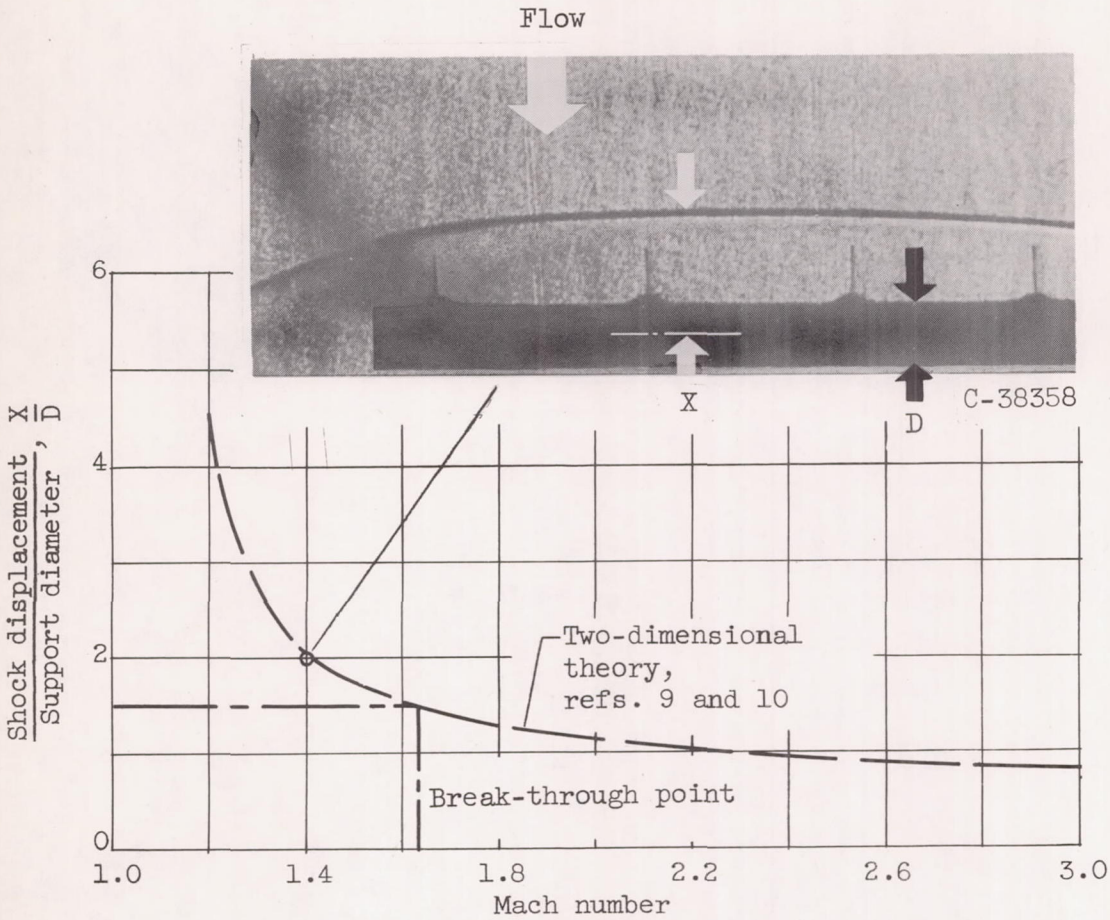

Figure 10. - Displacement of bow shock for cylinder transverse to supersonic flow.