Copy No. 345

CONFIDENTIAL

RM No. L8A07

NACA RM No. L8A07

NACA

RESEARCH MEMORANDUM

FREE-FLIGHT INVESTIGATION OF THE ROLLING EFFECTIVENESS OF A WING-SPOILER ARRANGEMENT AT HIGH SUBSONIC, TRANSONIC, AND SUPERSONIC SPEEDS

By

Carl A. Sandahl

Langley Memorial Aeronautical Laboratory
Langley Field, Va.

CLASSIFICATION CHANGED TO

UNCLASSIFIED DATE 8-18-54

AUTHORITY MR. J. W. CROWLEY

CHANGE NO. 2362 E.L.B.

CLASSIFIED DOCUMENT

This document contains classified information affecting the National Defense of the United States within the meaning of the Espionage Act, USC 50:31 and 32. Its transmission or the revelation of its contents in any manner to an unauthorized person is prohibited by law. Information so classified may be imparted only to persons in the military and naval services of the United States, appropriate civilian officers and employees of the Federal Government who have a legitimate interest therein, and to United States citizens of known loyalty and discretion who of necessity must be informed thereof.

NATIONAL ADVISORY COMMITTEE FOR AERONAUTICS

WASHINGTON

May 17, 1948

CONFIDENTIAL

NATIONAL ADVISORY COMMITTEE FOR AERONAUTICS

RESEARCH MEMORANDUM

FREE-FLIGHT INVESTIGATION OF THE ROLLING EFFECTIVENESS OF A WING-SPOILER ARRANGEMENT AT HIGH SUBSONIC, TRANSONIC, AND SUPERSONIC SPEEDS

By Carl A. Sandahl

SUMMARY

An investigation of the rolling effectiveness of a wing-spoiler arrangement has been conducted by the use of rocket-propelled test vehicles in free flight. The results obtained for the configuration tested, which probably was not an optimum, indicated that the rolling effectiveness was a maximum at about M = 0.91, decreased abruptly in the Mach number range from 0.92 to about 1.0, and continued to decrease with increasing Mach number to the maximum attained (M = 1.73). Further tests are indicated in order to develop a spoiler having improved rolling-effectiveness characteristics in the Mach number range investigated.

INTRODUCTION

The Pilotless Aircraft Research Division of the Langley Memorial Aeronautical Laboratory is now engaged in an experimental investigation of aerodynamic controls utilizing rocket-propelled test vehicles in free flight. The exploratory phase of this investigation is being conducted with the RM-5 test vehicle with which data relating to the rolling capabilities of wing-aileron combinations are obtained. Descriptions of the test technique and results obtained previously for the rolling-effectiveness characteristics of plain ailerons are given in references 1, 2, and 3.

Inasmuch as spoiler-type controls offer the possibility of obtaining control effectiveness with small hinge moments, an experimental investigation of the rolling effectiveness of a number of wing-spoiler configurations is being conducted with the above-described technique. The purpose of the present paper is to present results obtained recently relating to the rolling capabilities of a wing-spoiler arrangement consisting of a full-span spoiler having a projection of 2 percent of the wing chord and located at the 80-percent chord line. The spoiler was attached to an unswept wing of NACA 65-009 airfoil section. The present results, which

were not obtained for a sufficient number of different configurations to permit the evaluation of the effectiveness of spoiler ailerons at transonic and supersonic speeds, do, however, indicate the effectiveness characteristics of a typical spoiler arrangement.

SYMBOLS

$\frac{pb}{2V}$ wing-tip helix angle, radians

p rolling velocity, radians per second

b diameter of circle swept by wing tips, feet (with regard to rolling characteristics, this is considered to be the effective span of the three-fin RM-5 models)

V flight-path velocity, feet per second

C_D drag coefficient based on total exposed wing area of 1.563 square feet

M Mach number

b_1 diameter of circle swept by wing tips minus fuselage diameter

S_1 exposed area of two wing panels

A exposed aspect ratio $\left(\frac{b_1^2}{S_1}\right)$

h spoiler projection above wing surface

c wing chord parallel to model center line

δ_a aileron deflection measured in plane perpendicular to chord plane and parallel to model center line

APPARATUS AND TESTS

The general arrangement of the RM-5 test vehicles used in the present investigation is shown in figure 1 and the photograph of figure 2. The airfoil section in a plane normal to the chord plane and parallel to the model center line is the NACA 65-009; the exposed wing area is 1.563 square feet and the aspect ratio A is 3.0.

The test vehicles are propelled by a two-stage rocket-propulsion system to a Mach number of about 1.8 which corresponds to a Reynolds number of about 7 million based on the wing chord of 7.07 inches. The variation of Reynolds number with Mach number is shown in figure 3. During a 10-second period of coasting flight following rocket-engine burnout, time histories of the rolling velocity, obtained with special radio equipment, and the flight-path velocity, obtained with Doppler radar, are obtained. These data, in conjunction with atmospheric data obtained with radiosondes, permit the evaluation of the aileron rolling effectiveness in terms of the parameter $\frac{pb}{2V}$ as a function of Mach number. In addition, the variation of drag coefficient with Mach number is obtained by a method involving the differentiation of the curve of flight-path velocity versus time for power-off flight.

The experimental accuracy is estimated to be within the following limits:

$\frac{pb}{2V}$	± 0.005	(due to limitations on model constructional accuracy)
$\frac{pb}{2V}$	± 0.0005	(due to limitations on the instrumentation)
C_D	± 0.003	(at subsonic speeds)
C_D	± 0.002	(at supersonic speeds)
M	± 0.01	

It should be noted, as pointed out in reference 1, that owing to the relatively small rolling moment of inertia the values of $\frac{pb}{2V}$ obtained during flight are substantially steady-state values over the largest part of the Mach number range even though the model is experiencing an almost continual rolling acceleration or deceleration. Except for abrupt changes of $\frac{pb}{2V}$ with Mach number which some configurations experience in the Mach number range from about 0.85 to 1.0 (for example, model numbers 50 and 70, fig. 4) the correction for steady-state conditions is less than 3 percent. For abrupt changes in $\frac{pb}{2V}$ the correction is estimated to be of the order of 20 percent. Inasmuch as the correction to steady-state conditions involves an estimation of the damping in roll which cannot now be determined with sufficient accuracy at transonic speeds, no correction has been applied to the measured values of $\frac{pb}{2V}$. A complete discussion of the testing technique is contained in references 1, 2, and 3.

RESULTS AND DISCUSSION

The results of the present tests are presented in figure 4 as curves of $\frac{pb}{2V}$ and C_D versus Mach number.

As shown in figure 4, the spoiler rolling effectiveness is a maximum in the vicinity of Mach number 0.91 and decreases abruptly in the Mach number range from about 0.92 to about 1.0 and continues to decrease with increasing Mach number to the maximum attained (M = 1.73). The rolling effectiveness at supersonic speeds is considerably lower than at subsonic speeds. For example, the $\frac{pb}{2V}$ at M = 1.4 is about 1/7 the value of $\frac{pb}{2V}$ at M = 0.9. For comparison, the rolling-effectiveness characteristics of a plain, sealed, 0.2-chord full-span aileron mounted on a wing of the same plan form and section as used in the spoiler tests is shown in figure 4.

The relation between the spoiler rolling effectiveness and the increase in wing drag coefficient due to spoiler projection is also shown in figure 4. At a Mach number of 0.8 the spoiler is effective in producing roll and the increase in wing drag coefficient due to spoiler extension, taken as the ratio of the wing drag coefficients for model numbers 70C and 50A, is of the order of five times, a value which is in agreement with the results of reference 4. At supersonic Mach numbers the spoiler rolling effectiveness is reduced and the increase in wing drag coefficient due to spoiler extension is small. These results indicate that, at supersonic speeds, the wing boundary layer is relatively thicker than that at subsonic speeds and that larger spoiler extensions and more forward chordwise locations would be beneficial.

CONCLUDING REMARKS

It should be realized that the wing-spoiler arrangement tested is in all probability not the optimum. Further work is indicated in order to develop a spoiler having improved rolling-effectiveness characteristics over the Mach number range investigated.

Langley Memorial Aeronautical Laboratory
National Advisory Committee for Aeronautics
Langley Field, Va.

REFERENCES

1. Sandahl, Carl A., and Marino, Alfred A.: Free-Flight Investigation of Control Effectiveness of Full-Span 0.2-Chord Plain Ailerons at High Subsonic, Transonic, and Supersonic Speeds to Determine Some Effects of Section Thickness and Wing Sweepback. NACA RM No. L7D02, 1947.

2. Sandahl, Carl A.: Free-Flight Investigation of Control Effectiveness of Full-Span, 0.2-Chord Plain Ailerons at High Subsonic, Transonic, and Supersonic Speeds to Determine Some Effects of Wing Sweepback, Taper, Aspect Ratio, and Section Thickness Ratio. NACA RM No. L7F30, 1947.

3. Sandahl, Carl A., and Strass, H. Kurt: Additional Results in a Free-Flight Investigation of Control Effectiveness of Full-Span, 0.2-Chord Plain Ailerons at High Subsonic, Transonic, and Supersonic Speeds to Determine Some Effects of Wing Sweepback, Aspect Ratio, Taper, and Section Thickness Ratio. NACA RM No. L7L01, 1947.

4. Velasco, Carlos E.: High-Speed Wind-Tunnel Investigation of Spoilers for Lateral Control on the NACA 65_1-210 Airfoil Section. NACA MR No. A5K02, 1945.

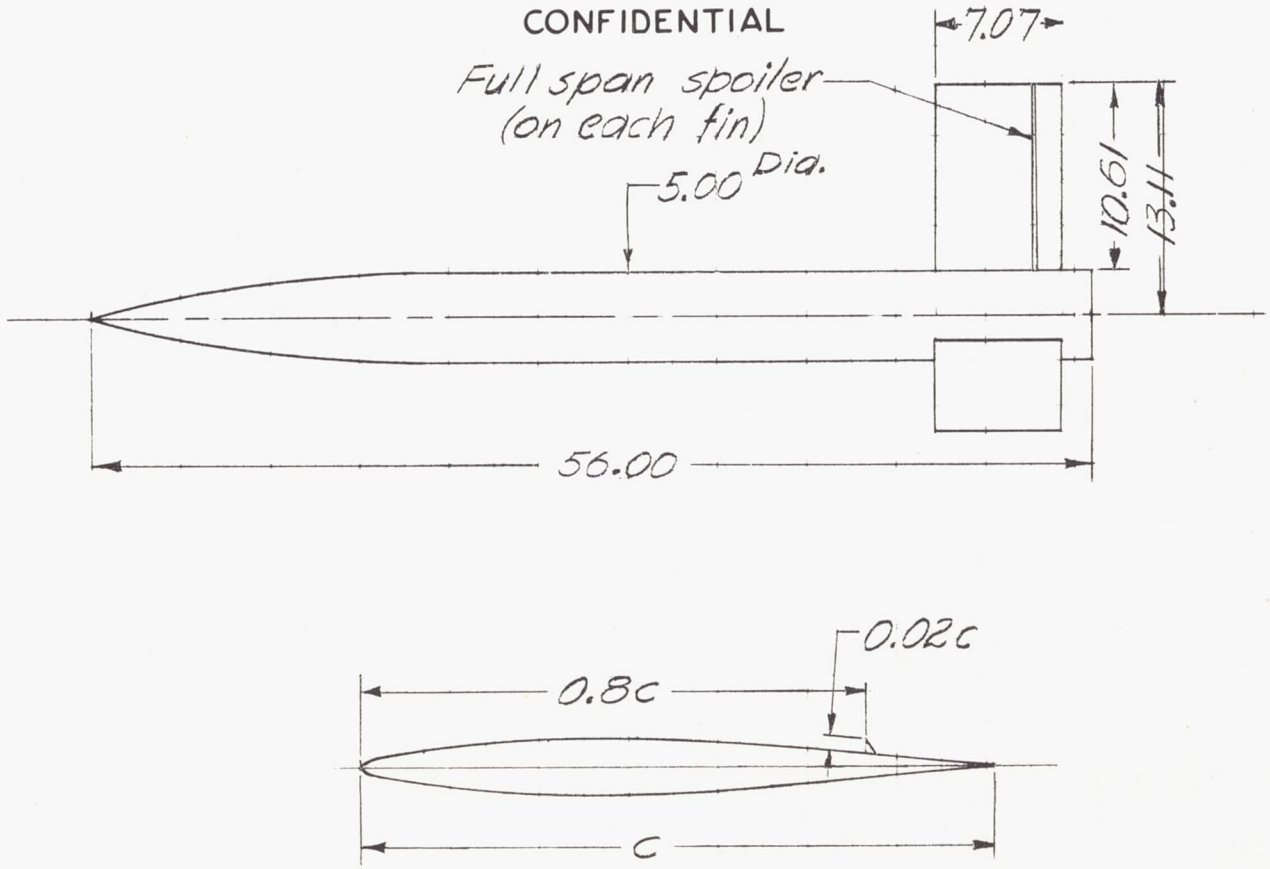

Figure 1.- General arrangement of spoiler model tested. Dimensions are in inches.

CONFIDENTIAL

Figure 2.- Spoiler model tested.

CONFIDENTIAL

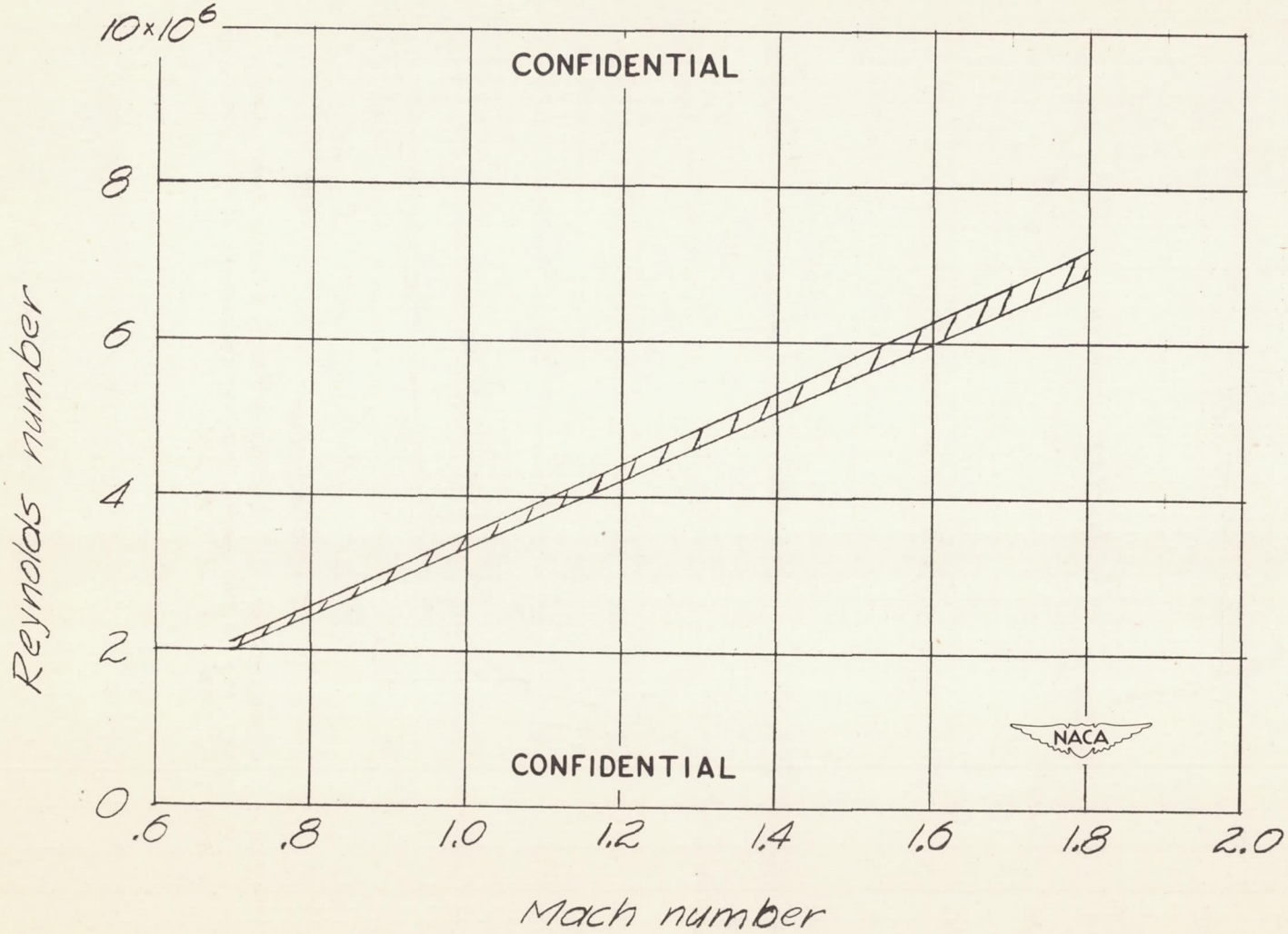

Figure 3.- Variation of Reynolds number with Mach number for the range of climatic conditions encountered during tests.

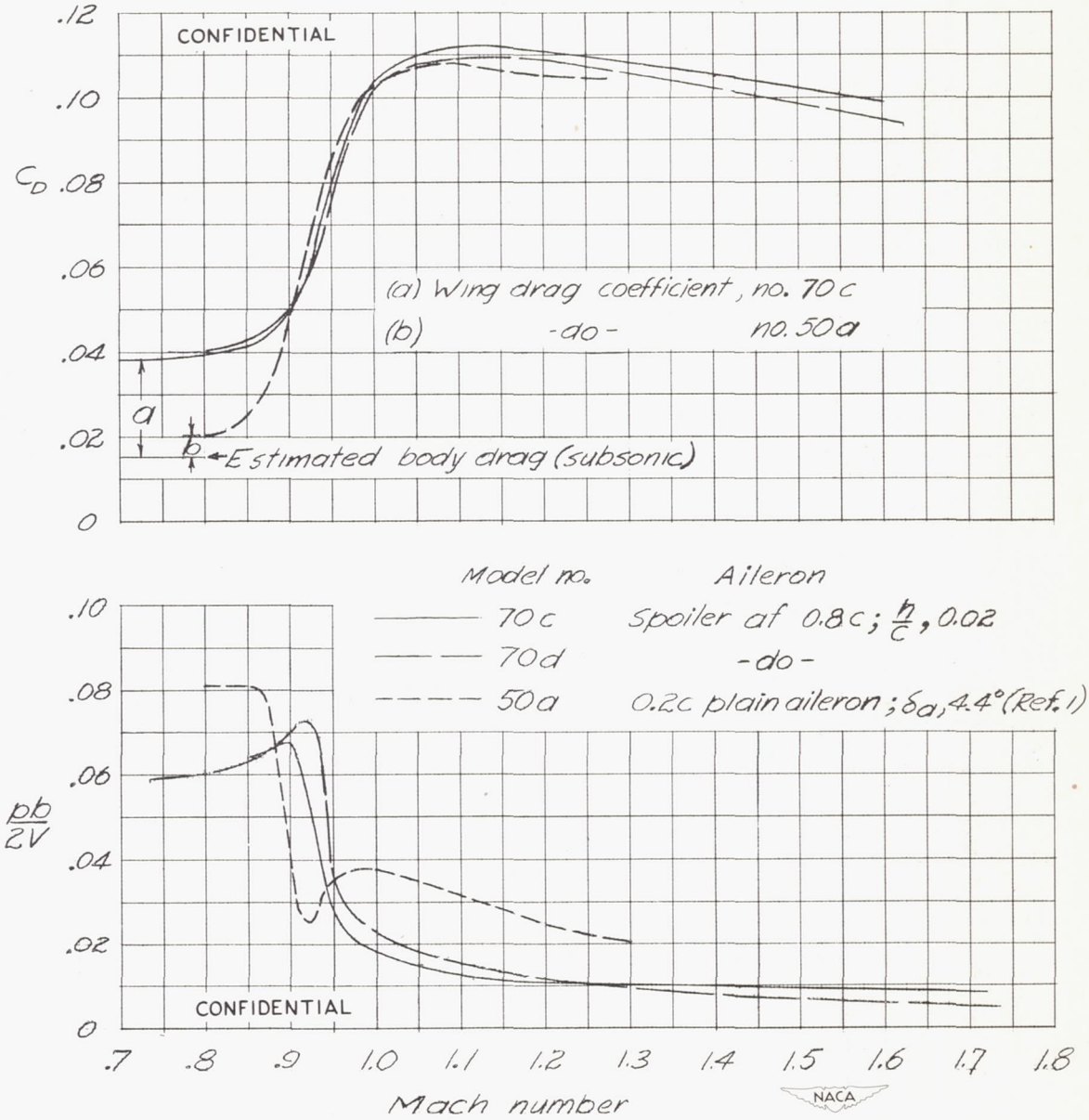

Figure 4.- Comparison of rolling effectiveness and drag coefficient for plain and spoiler ailerons. Airfoil section, NACA 65-009; Λ, 0°; A, 3.0.