NACA

RESEARCH MEMORANDUM

EXPERIMENTAL INVESTIGATION OF VARIOUS WING-MOUNTED EXTERNAL STORES ON A WING-FUSELAGE COMBINATION HAVING A SWEPTBACK WING OF INVERSE TAPER RATIO

By Kenneth P. Spreemann and H. Norman Silvers

Langley Aeronautical Laboratory
Langley Air Force Base, Va.

NATIONAL ADVISORY COMMITTEE
FOR AERONAUTICS
WASHINGTON

September 15, 1950

NATIONAL ADVISORY COMMITTEE FOR AERONAUTICS

RESEARCH MEMORANDUM

EXPERIMENTAL INVESTIGATION OF VARIOUS WING-MOUNTED EXTERNAL STORES ON A WING-FUSELAGE COMBINATION HAVING A SWEPTBACK WING OF INVERSE TAPER RATIO

By Kenneth P. Spreemann and H. Norman Silvers

SUMMARY

An investigation was conducted in the Langley high-speed 7- by 10-foot tunnel to determine the effects of several wing-mounted external-store configurations on the aerodynamic characteristics of a small-scale model of a swept wing-fuselage combination through a Mach range from 0.40 to 0.92. The external-store configurations investigated included inboard underwing installations (pylon-suspended and flush-wing stores) and wing-tip installations (forward-mounted and central-mounted stores). The most satisfactory store investigated from considerations of the effects on the drag rise Mach number, change in aerodynamic center, and the maximum attainable ratios of L/D was the forward-mounted tip store with its center line parallel with the plane of symmetry of the model.

INTRODUCTION

An investigation was made in the Langley high-speed 7- by 10-foot tunnel to supplement existing material on the effects of external stores on the aerodynamic characteristics of models by providing information on a model with a swept wing of inverse taper ratio.

The results presented in this paper include the variations of lift coefficient, drag coefficient, and pitching-moment coefficient with the angle of attack for the model with and without stores through a Mach range from 0.40 to 0.92.

COEFFICIENTS AND SYMBOLS

The coefficients and symbols referred to in this paper are defined as follows:

C_L lift coefficient (Twice semispan lift/qS)

C_D drag coefficient (Twice semispan drag/qS)

C_m pitching-moment coefficient, measured about the 15 percent $\bar{c}$ (M.A.C.) (Twice semispan pitching moment/$qS\bar{c}$)

M stream Mach number (V/a)

q dynamic pressure, pounds per square foot $\left(\frac{1}{2}\rho V^2\right)$

ρ mass density of air, slugs per cubic foot

V velocity of air, feet per second

a velocity of sound, feet per second

S twice wing area of semispan (0.20 sq ft on model)

$\bar{c}$ mean aerodynamic chord (0.265 ft)

α angle of attack of fuselage reference line

δ_s angle of center line of external store with respect to plane of symmetry, positive when nose of store is outboard of trailing edge of store

M_d drag break Mach number (See table I.)

ΔM_d increment of drag break Mach number $\left(M_{d_{model + store}} - M_{d_{model}}\right)$

C_{D_d} drag coefficient at drag break Mach number (See table I.)

ΔC_{D_d} increment of drag coefficient at drag break Mach number of model + store $\left(C_{D_{d\ model + store}} - C_{D_{model}}\right)$

APPARATUS AND MODEL

The investigation was conducted in the Langley high-speed 7- by 10-foot tunnel.

A model consisting of a small-scale model of a sweptback wing of inverse taper ratio and a fuselage without tail surfaces was investigated as a half model using a boundary-layer plate mounted 3 inches from the tunnel wall to minimize boundary-layer interference. Forces and moments were measured by means of a strain-gage balance system mounted outside the tunnel, which was sealed to prevent leakage of air into the flow field of the model. In order to prevent fouling of the model a clearance of approximately 1/32 inch was maintained between the plane of symmetry of the model and the boundary-layer plate. The wing of the model was 10 percent thick in a plane perpendicular to the 50-percent-chord line, and swept back 40° at the 50-percent-chord line with a taper ratio of 1.628 (inverse taper), an aspect ratio of 3.05, and with an angle of incidence relative to the fuselage reference line of 2°. Figure 1 is a drawing of the model mounted on the boundary-layer plate showing the pylon-suspended external-store installation. Shown in figure 2 are photographs of the model mounted on the boundary-layer plate in the Langley high-speed 7- by 10-foot tunnel without stores and with the pylon-suspended and the forward tip-store installations in place.

The pylon-suspended wing store (fig. 1) was mounted inboard on the wing at an angle of incidence with respect to the fuselage reference line of -2°, and had a detachable tail plug to permit attachment of vertical and horizontal stabilizing surfaces which were representative of those utilized in flight to minimize the possibilities of store interference with the wing when the stores are jettisoned. The pylon suspension member was of 2.880 inches chord at the wing and 3.477 inches chord at the store, and the maximum thickness ratio was about 6.35 percent at the 40-percent-chord point.

The flush-wing store (fig. 3) was mounted inboard, at zero incidence relative to the fuselage reference line, so that the upper surface of the store was tangent to the lower surface of the wing at about 50 percent of the wing chord. A fairing (designated as A, fig. 3) was devised for the flush-wing-store installation. Illustrations depicting the fairings on the flush-wing store and tip stores are presented in figure 4. These fairings were designed to alleviate the large interference drag between the wing and the body by inducing local velocities in the juncture that were no higher than those over the wing in the regions that were undisturbed by the presence of the store. It should

be noted that the resulting fairing profile was concave over a small region at the forward part near the leading edge of the wing. (See figs. 5(b) and 6.) In the absence of pressure measurements, the fairings utilized in this investigation were developed experimentally by tuft studies in the juncture and comparison of drag measurements for consecutive modifications to the fairings at 0° angle of attack.

The forward-tip store in the original configuration was unskewed ($\delta_s = 0^{\circ}$) with the center line parallel to and on the chord line of the wing (fig. 5(a)). In an effort to reduce interference effects, the store was modified by skewing the nose out ($\delta_s = 9.13^{\circ}$) and attaching fairing B. The general characteristics of fairing B, particularly the cusp near the wing leading edge, are shown in figures 4 and 5(b).

The central-tip store was located aft on the wing tip so that the 50-percent-chord line of the wing intersected the center line of the store at its midpoint. The nose of the store was rotated about its midpoint to a skewed-out position of $\delta_s = 9.88^{\circ}$. A fairing C was added to the central-tip store which was similar to fairing B except that the afterbody was flat sided resulting in a bluff trailing edge (fig. 6). A closer duplication of the angle of skew of the forward-tip store ($\delta_s = 9.13^{\circ}$) to that of the central-tip store was not feasible because of structural limitations of the models.

The external store (fig. 7) used for all configurations was a body of revolution of fineness ratio 7.43. The thickness distribution of the external store corresponded approximately to an NACA 66-series section and the airfoil section corresponded approximately to an NACA 65_1-210 airfoil section in a plane normal to the 50-percent-chord plane.

TESTS

Lift, drag, and pitching-moment measurements were obtained at several angles of attack for the model without stores and with several arrangements of external stores through a Mach number range that generally extended from 0.40 to 0.92.

Shown in figure 8 is the variation of test Reynolds number with Mach number. The cross-hatched region of this plot indicates the extreme limits of Reynolds numbers measured in this investigation. The departure from the mean Reynolds number curve at any Mach number was occasioned by changes in the atmospheric conditions.

Jet-boundary and blockage corrections were considered negligible and were not applied to the data.

RESULTS AND DISCUSSION

The variations of angle of attack, drag coefficient, and pitching-moment coefficient with lift coefficient at various Mach numbers for the model without stores and with several arrangements of external stores are presented in figure 9. Calculated lift-drag ratios as a function of lift coefficient at constant Mach numbers for the model without stores and with several of the external-store installations tested are presented in figure 10. In figure 11 are presented the variations of lift-curve slope, aerodynamic center, drag coefficient at $C_L = 0.2$, and the maximum lift-drag ratio with Mach number for the model with and without stores. Figures 10 and 11 were obtained from the basic data in figure 9. Table I is a summary of drag break Mach number M_d, the increment in drag break Mach number ΔM_d, drag coefficient at the drag break Mach number C_{D_d}, and the increment in drag coefficient ΔC_{D_d} at the drag break Mach number. As illustrated in table I, the drag break Mach number was determined by drawing a 45° line tangent to the drag curve and considering the point of tangency to be the drag break Mach number of the combination.

Lift-Drag Ratios

In general, all the external-store installations decreased the lift-drag ratios (fig. 10). The pylon-suspended wing store shows the greatest reduction in maximum lift-drag ratio. The tip-mounted stores show somewhat less loss in maximum lift-drag ratio, particularly at the lower Mach numbers, probably because of the end-plate effect and favorable interference effects produced by the stores. The forward-tip-mounted store, $\delta_s = 0^\circ$, exhibited better lift-drag characteristics throughout the Mach range than any other external-store installation investigated and from $M = 0.40$ to about $M = 0.60$ gave an $(L/D)_{max}$ greater than the basic wing. (See fig. 11(b).)

Drag Characteristics

The drag break Mach number observed in the wind-tunnel data, in addition to representing the highest speed obtainable without the changes in forces and moments usually manifested by compressibility phenomenon, has been found to be a good indication of the buffet boundary of the airplane with external stores (reference 1). The

drag break Mach number in conjunction with the drag coefficient at the drag break Mach number has been used to evaluate the high-speed drag characteristics of the external stores investigated. These results are summarized in table I. The forward-tip store ($\delta_s = 0^{\circ}$) gave the least drag increase while maintaining a high drag break Mach number and from these considerations would appear to be the most satisfactory store investigated. It appears however, that this configuration may introduce aeroelastic effects that may present practical problems. Of the inboard underwing stores, the flush-wing store with fairing A had only slightly inferior characteristics to the forward-tip store while the other configurations investigated on both the tip and inboard under the wing displayed high-speed characteristics that were considered inferior to these two.

Lift-Curve Slope

From figure 11 it appears that the lift-curve slope of the basic model is not greatly affected by the addition of the inboard under-wing stores. For the wing-tip configurations, the augmentation in effective aspect ratio produced by the end-plate effect of the tip-mounted stores gave fairly large increases in the lift-curve slope (maximum of 23 percent) throughout the Mach range investigated.

Pitching-Moment Characteristics

The pitching-moment coefficients were not greatly affected by the addition of the wing-tip stores; but the flush-wing store caused small positive changes and the pylon-suspended wing store gave appreciable positive changes in the pitching moment at a constant lift coefficient. (See fig. 9.)

The rate of change in pitching-moment coefficient with lift coefficient at a constant Mach number $(\partial C_m/\partial C_L)_M$ in figure 11 is a measure of the aerodynamic-center location relative to the assumed center-of-gravity position in percent of the mean aerodynamic chord. For most configurations there is a forward shift in aerodynamic center of about 2 percent. However, in the case of the pylon-suspended wing store with fins there was a rearward shift of about 4 percent at low Mach numbers and for the flush-wing store a forward shift of about 4 percent throughout the Mach range.

CONCLUSIONS

The following conclusions are based on a wind-tunnel investigation of inboard underwing and wing-tip mounted external stores on a small-scale model of a wing-fuselage combination having a sweptback wing of inverse taper ratio through a Mach number range from 0.40 to 0.92.

1. Tip-mounted stores were generally superior to under wing mounted external stores in regard to the effect of the store on the Mach number for drag rise, the change in position of the wing aerodynamic center, and the maximum lift-drag ratios attainable.

2. The most satisfactory store investigated was a tip store mounted in a forward position on the wing tip with its center line parallel with the plane of symmetry of the model.

Langley Aeronautical Laboratory
National Advisory Committee for Aeronautics
Langley Air Force Base, Va.

REFERENCES

1. Silvers, H. Norman, and Spreemann, Kenneth P.: Correlation of Wind-Tunnel and Flight Determinations of the Buffet Speed of an Airplane Equipped with External Stores. NACA RM L7E20, 1948.

TABLE I.- SUMMARY OF HIGH-SPEED DRAG CHARACTERISTICS OF THE EXTERNAL STORES AT $C_L = 0.2$

Configuration	M_d	ΔM_d	C_{D_d}	ΔC_{D_d}
Basic model	0.910	------	0.0248	------
Pylon-suspended; fins off	.878	-0.032	.0320	0.0090
Pylon-suspended; fins on	*	------	------	------
Flush-wing; fairing off	.879	-.031	.0296	.0065
Flush-wing; fairing A	.864	-.046	.030	.0076
Forward-tip; fairing off; $\delta_s = 0^\circ$	.878	-.032	.028	.0050
Forward-tip; fairing B; $\delta_s = 9.13^\circ$	.870	-.040	.0322	.0098
Central-tip; fairing off; $\delta_s = 9.88^\circ$	.898	-.012	.0317	.0073
Central-tip; fairing C; $\delta_s = 9.88^\circ$	.905	-.005	.0327	.0077

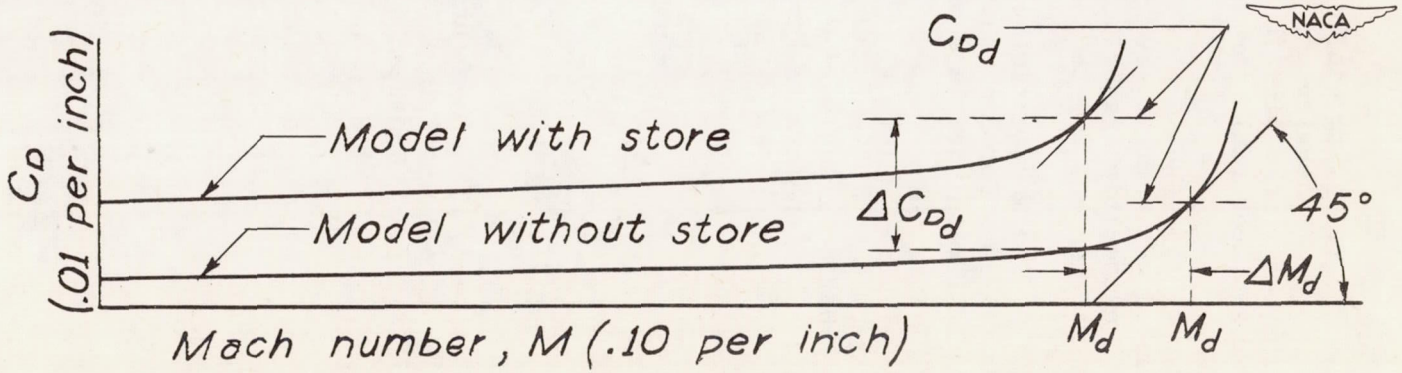

*Mach range too low to secure drag break Mach number.

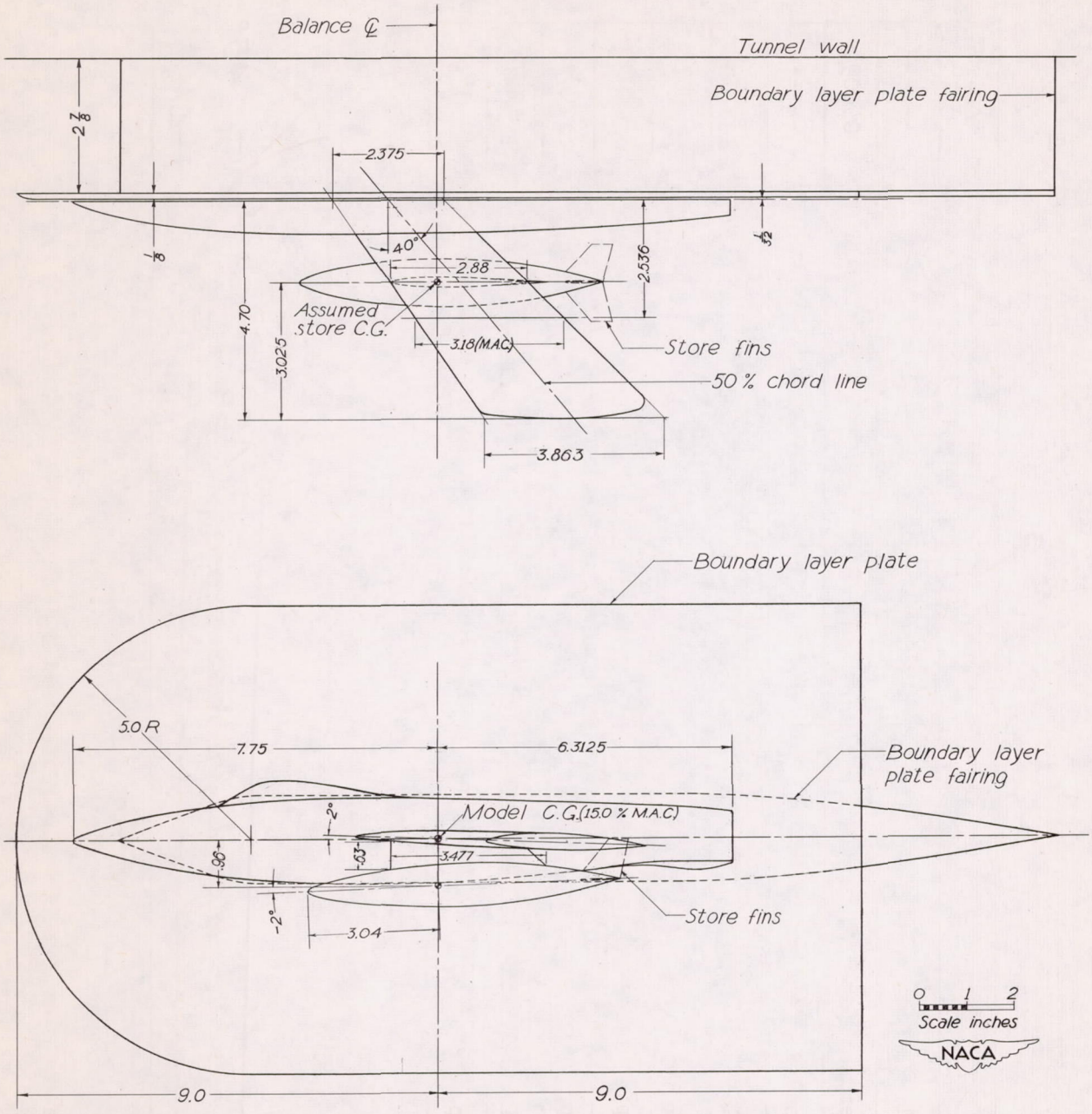

Figure 1.- Drawing of the wing-fuselage combination with pylon-suspended wing store.

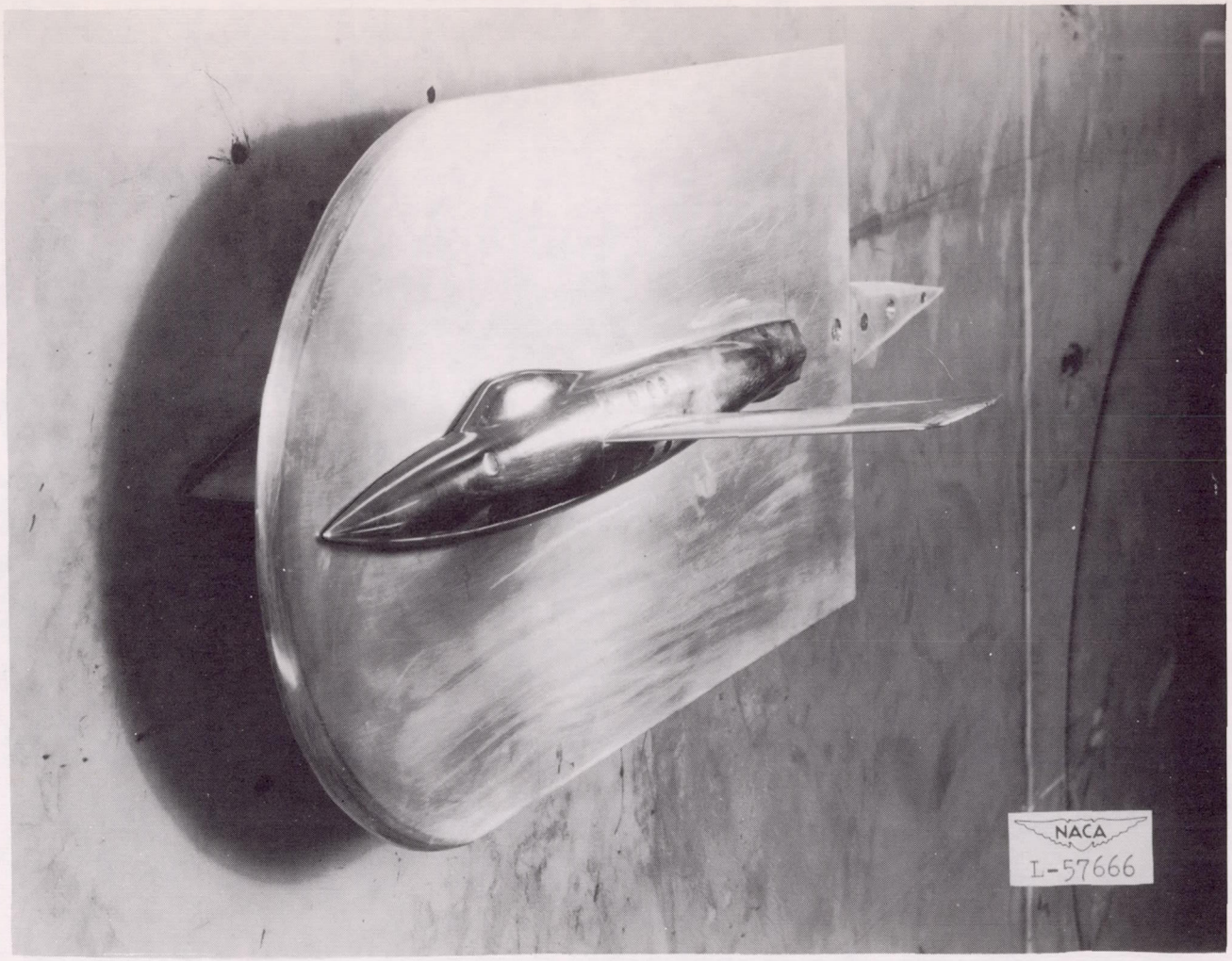

(a) Basic model.

Figure 2.- The wing-fuselage combination mounted on the boundary-layer plate.

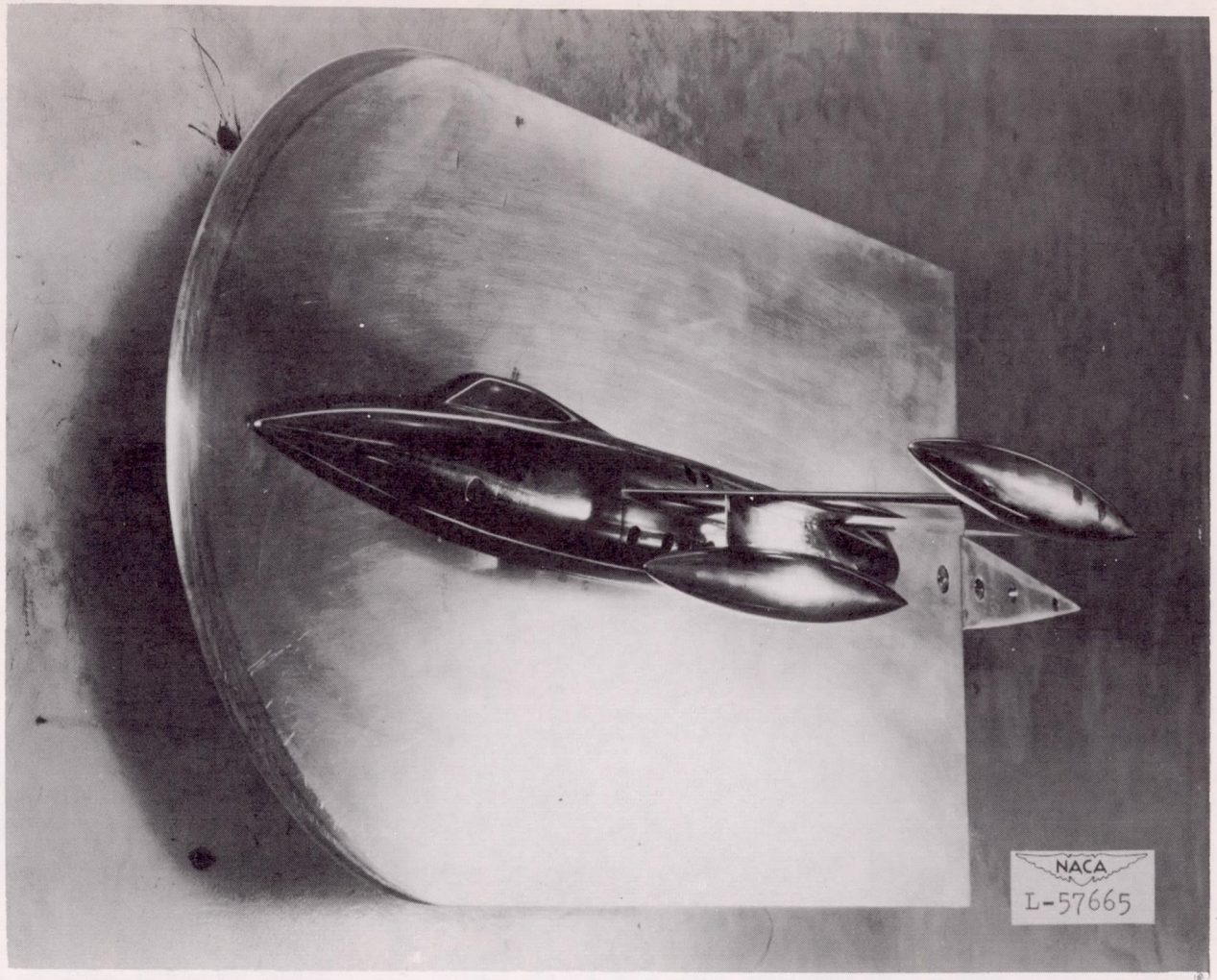

(b) Model with pylon-suspended wing store and forward-tip store installed.

Figure 2.- Concluded.

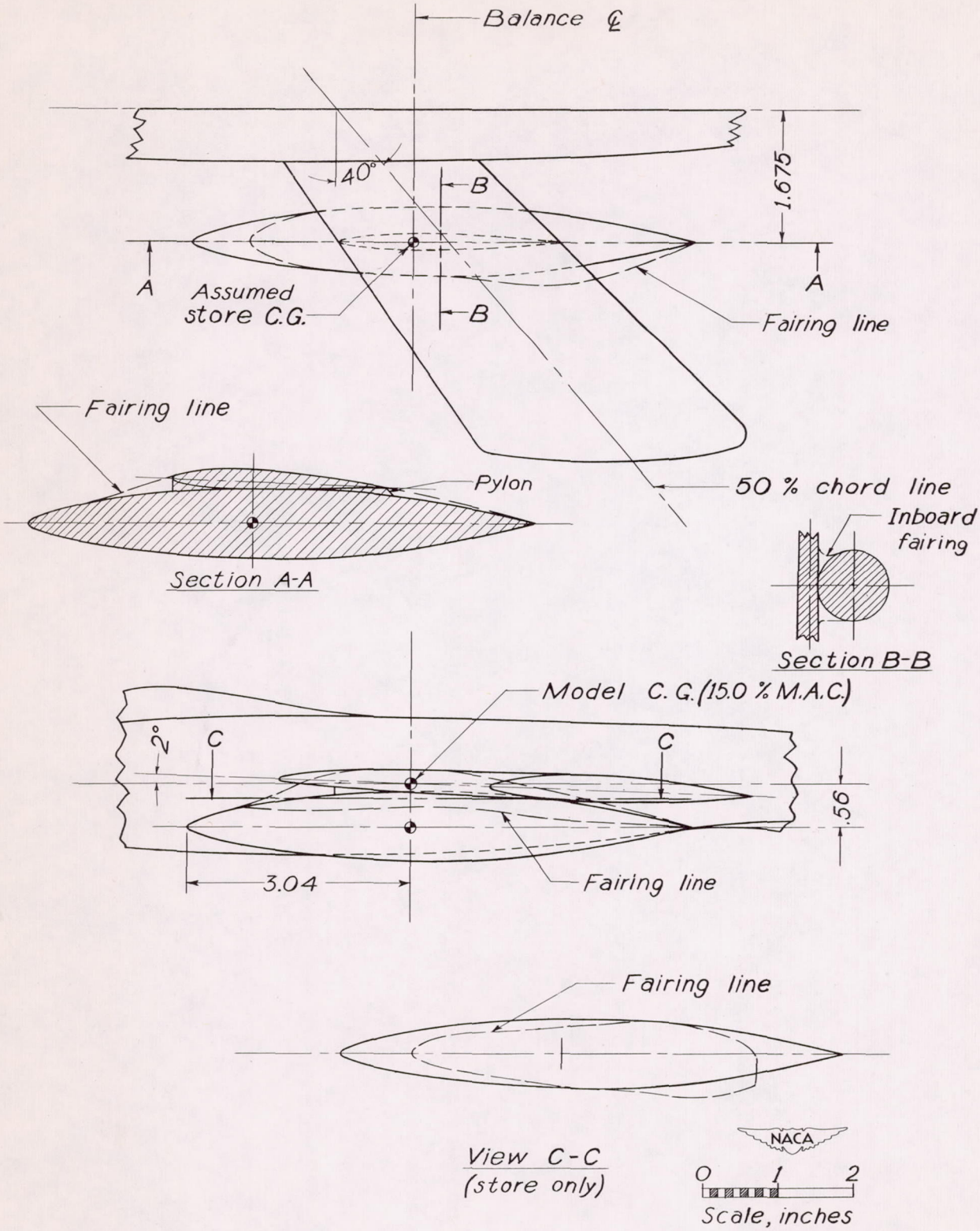

Figure 3.- Drawing of the flush wing store with fairing off and with fairing A on the wing-fuselage combination.

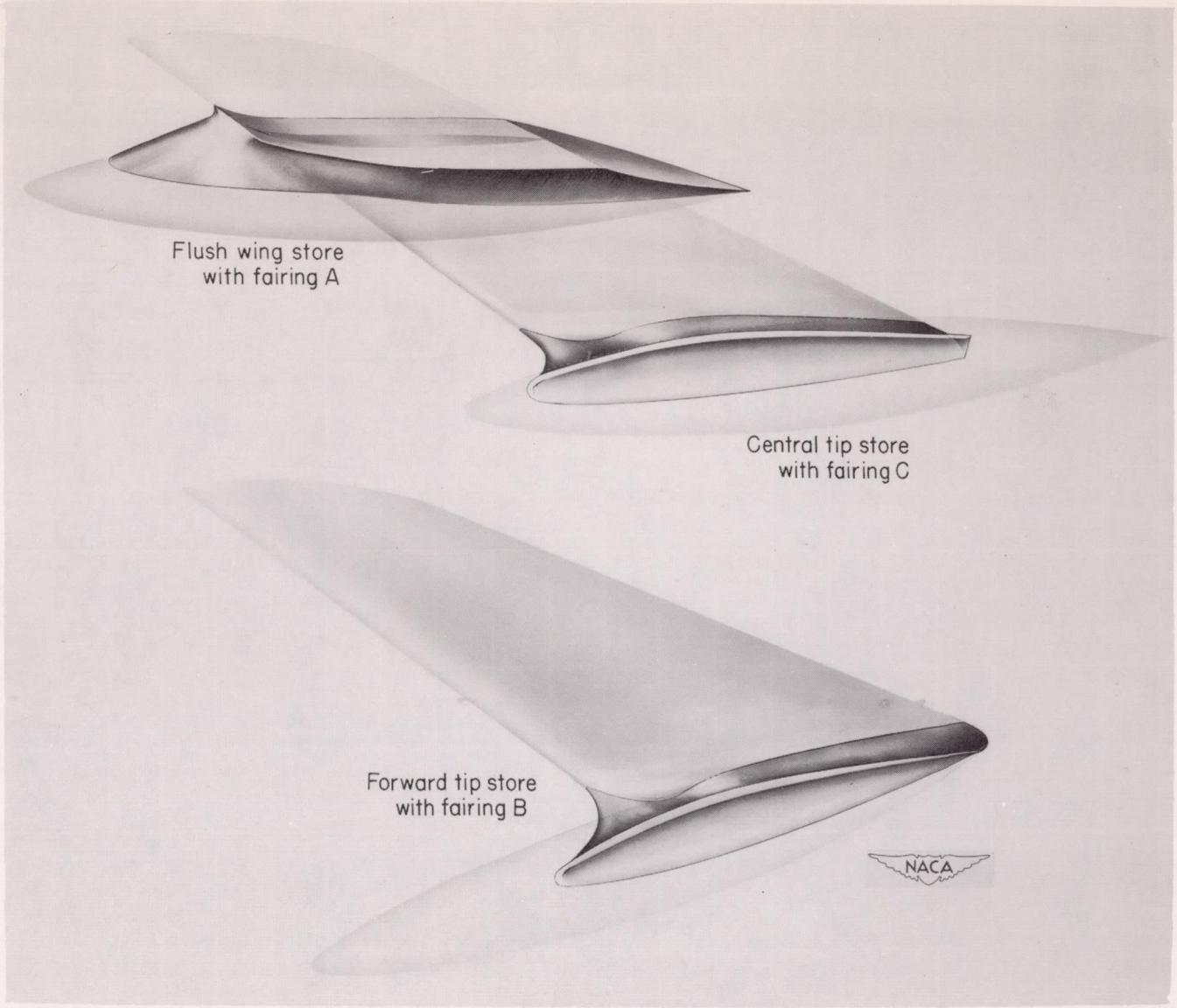

Figure 4.- External stores with fairings tested on the wing-fuselage combination.

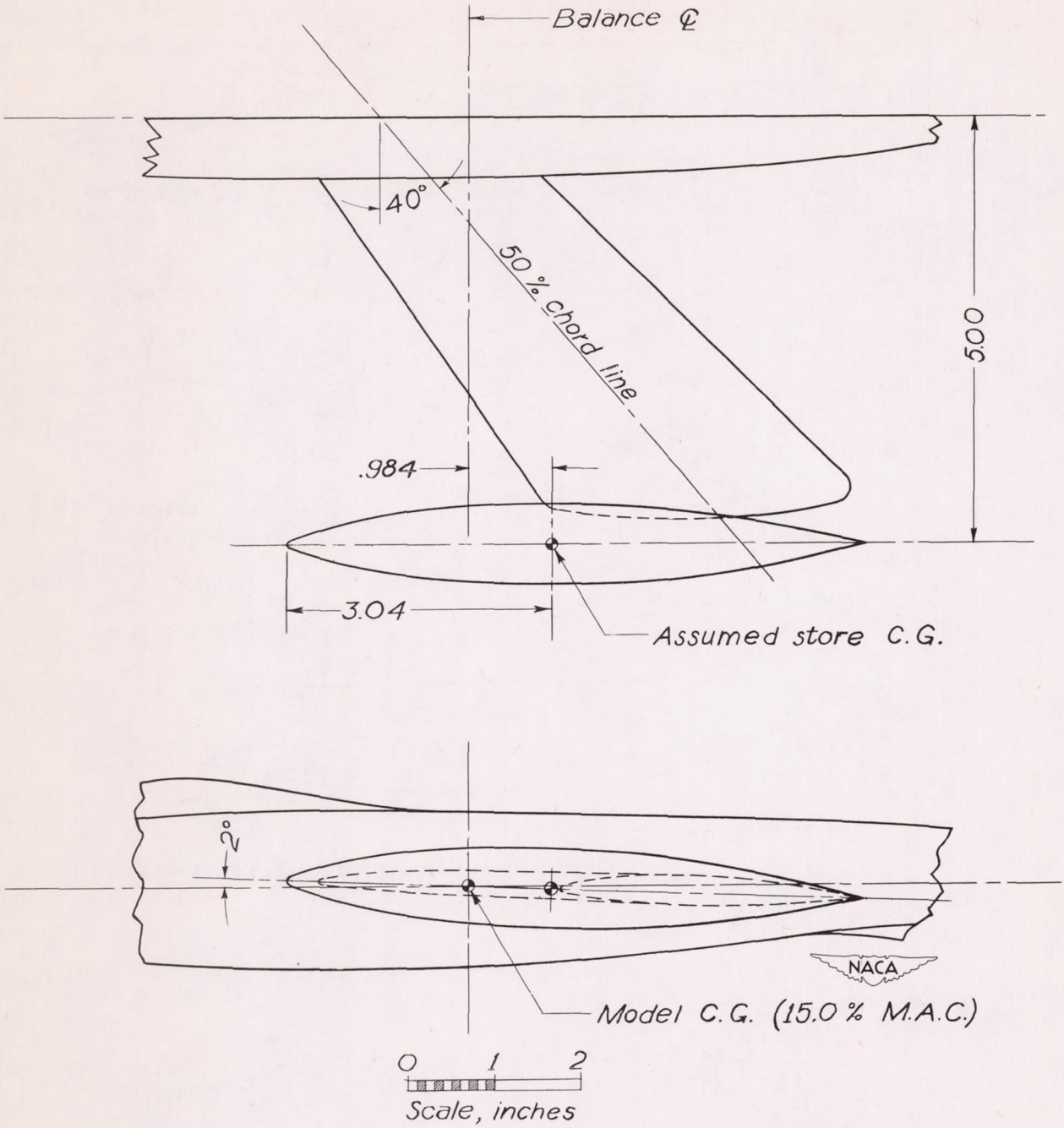

(a) Fairing off; $\delta_s = 0^{\circ}$.

Figure 5.- Drawing of the forward-tip store on the wing-fuselage combination.

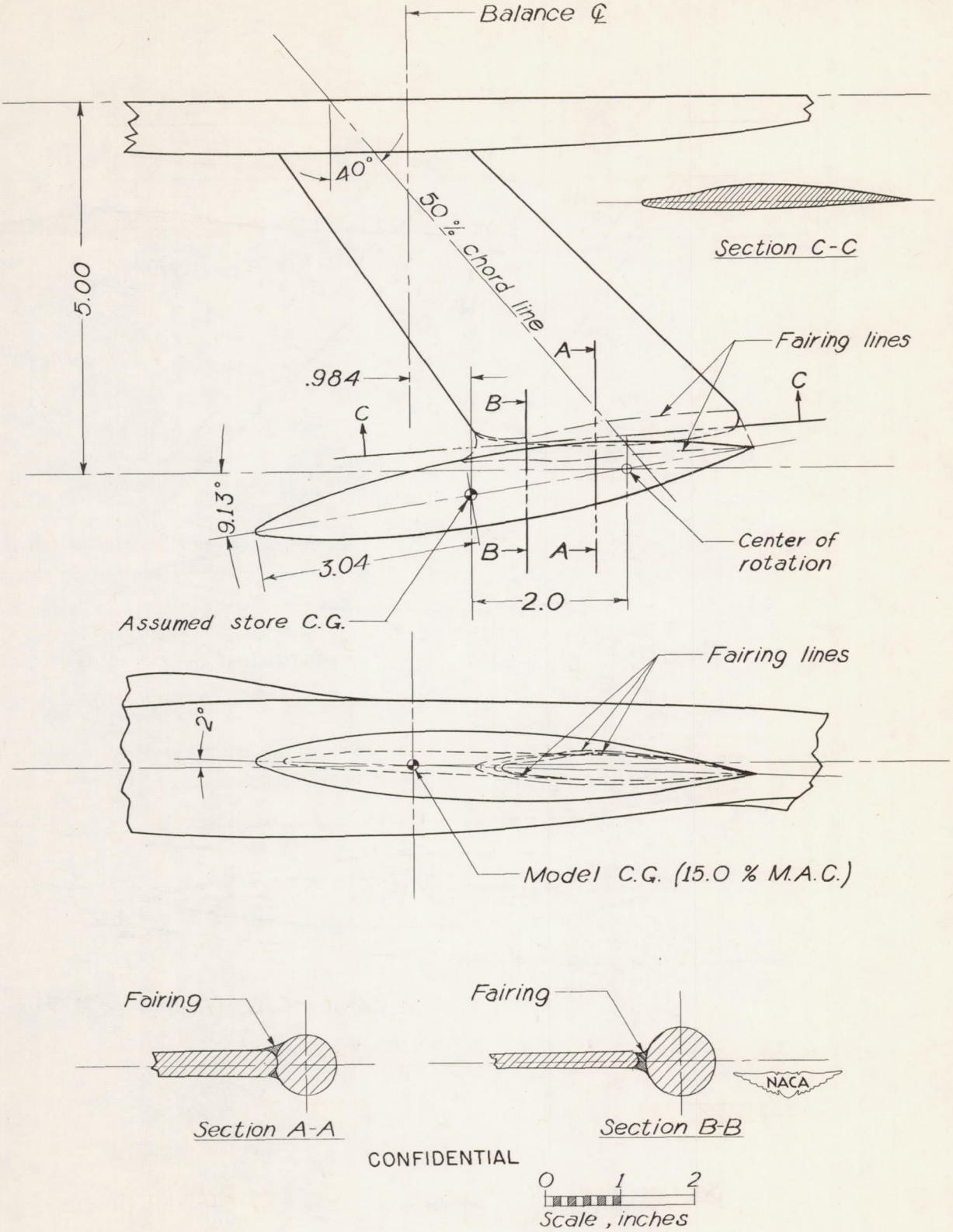

(b) Fairing B; $\delta_s = 9.13^{\circ}$.

Figure 5.- Concluded.

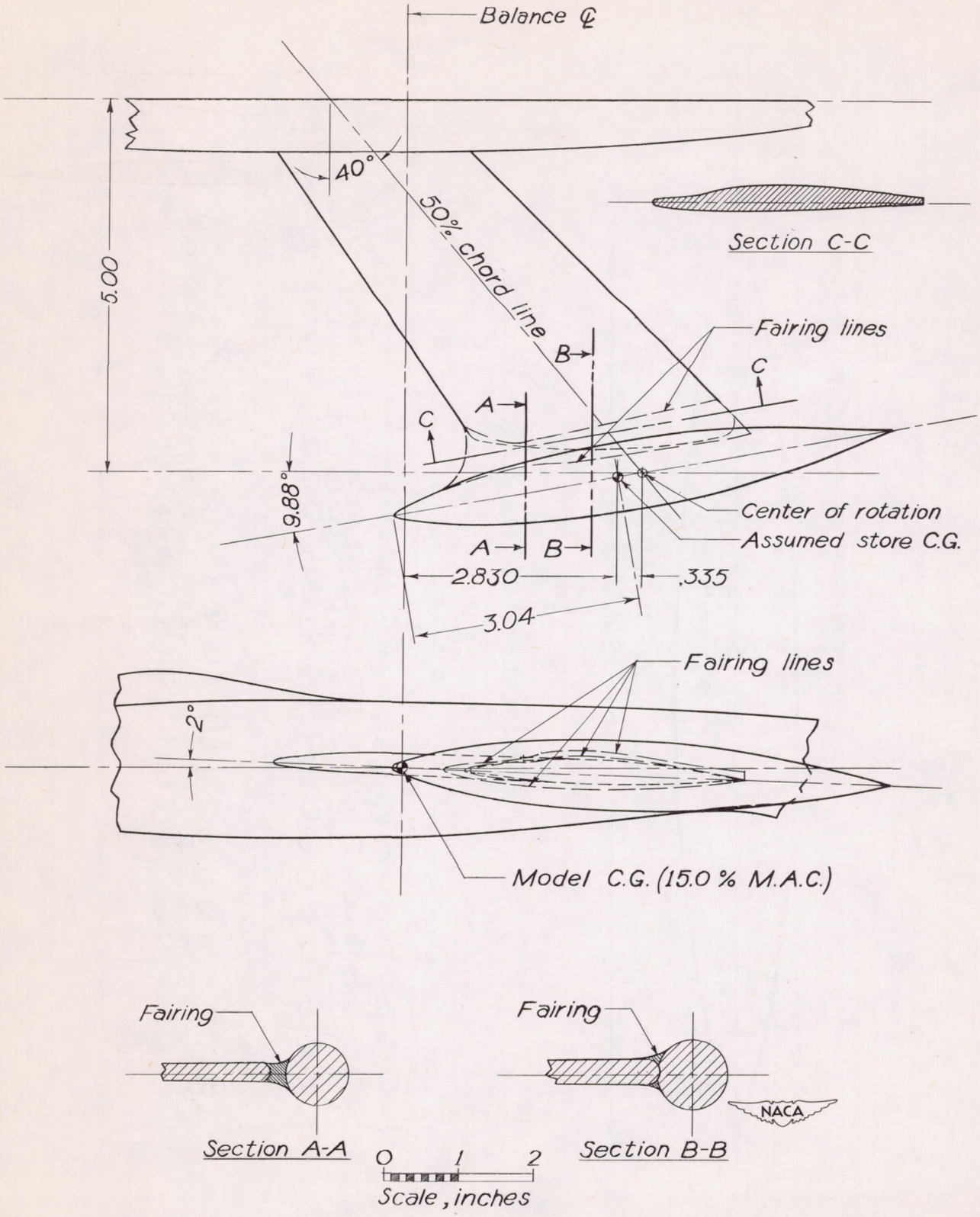

Figure 6.- Drawing of the central-tip store with fairing off and with fairing C on the wing-fuselage combination.

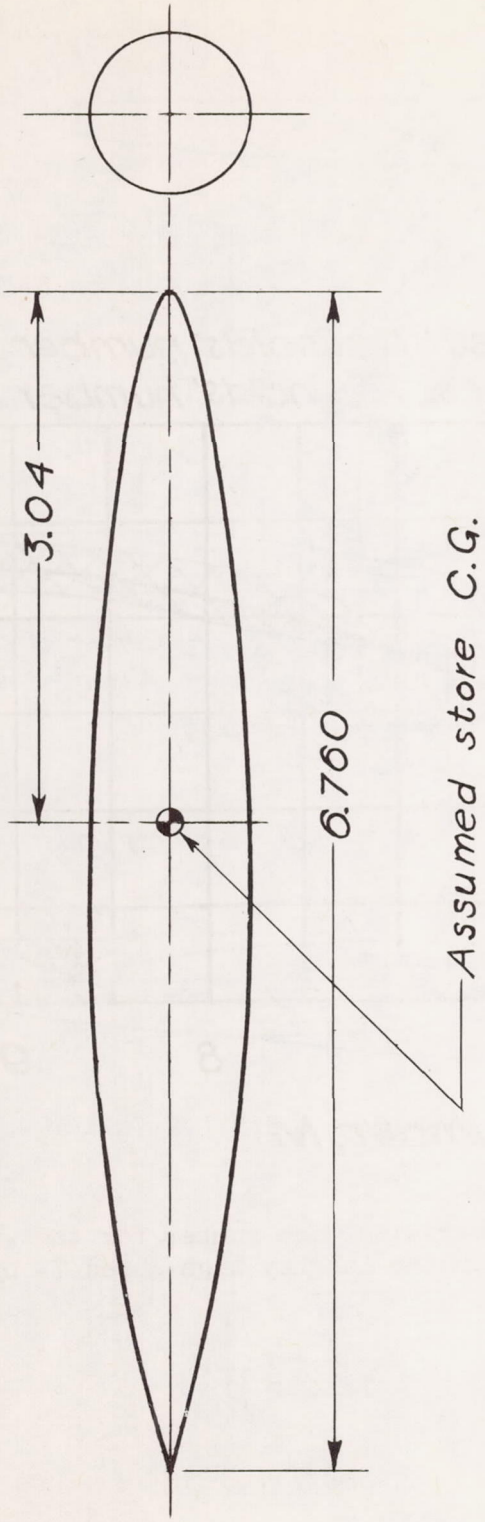

External store ordinates, in.	
Station	Radius
0.007	0.017
.026	.035
.078	.063
.130	.083
.260	.124
.520	.186
.780	.237
1.040	.281
1.300	.319
1.560	.352
1.950	.393
2.470	.431
3.120	.454
3.250	.455
3.338	.455
3.640	.451
3.900	.443
4.160	.430
4.420	.412
4.810	.375
5.070	.344
5.330	.307
5.590	.265
5.850	.217
6.110	.163
6.370	.102
6.500	.070
6.630	.036
6.760	0

Figure 7.- Drawing of the external store investigated on the wing-fuselage combination.

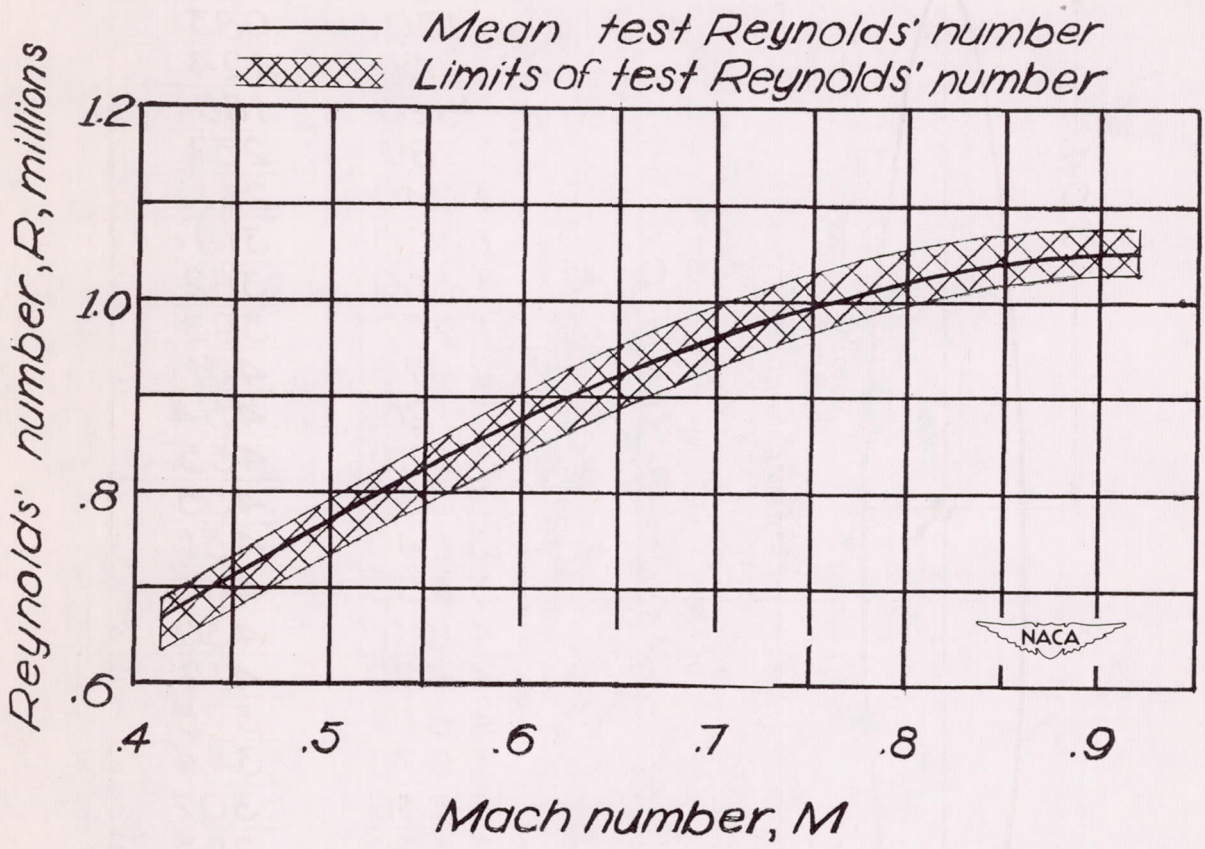

Figure 8.- Variation of Reynolds number with Mach number for the wing-fuselage combination investigated in the Langley high-speed 7- by 10-foot tunnel.

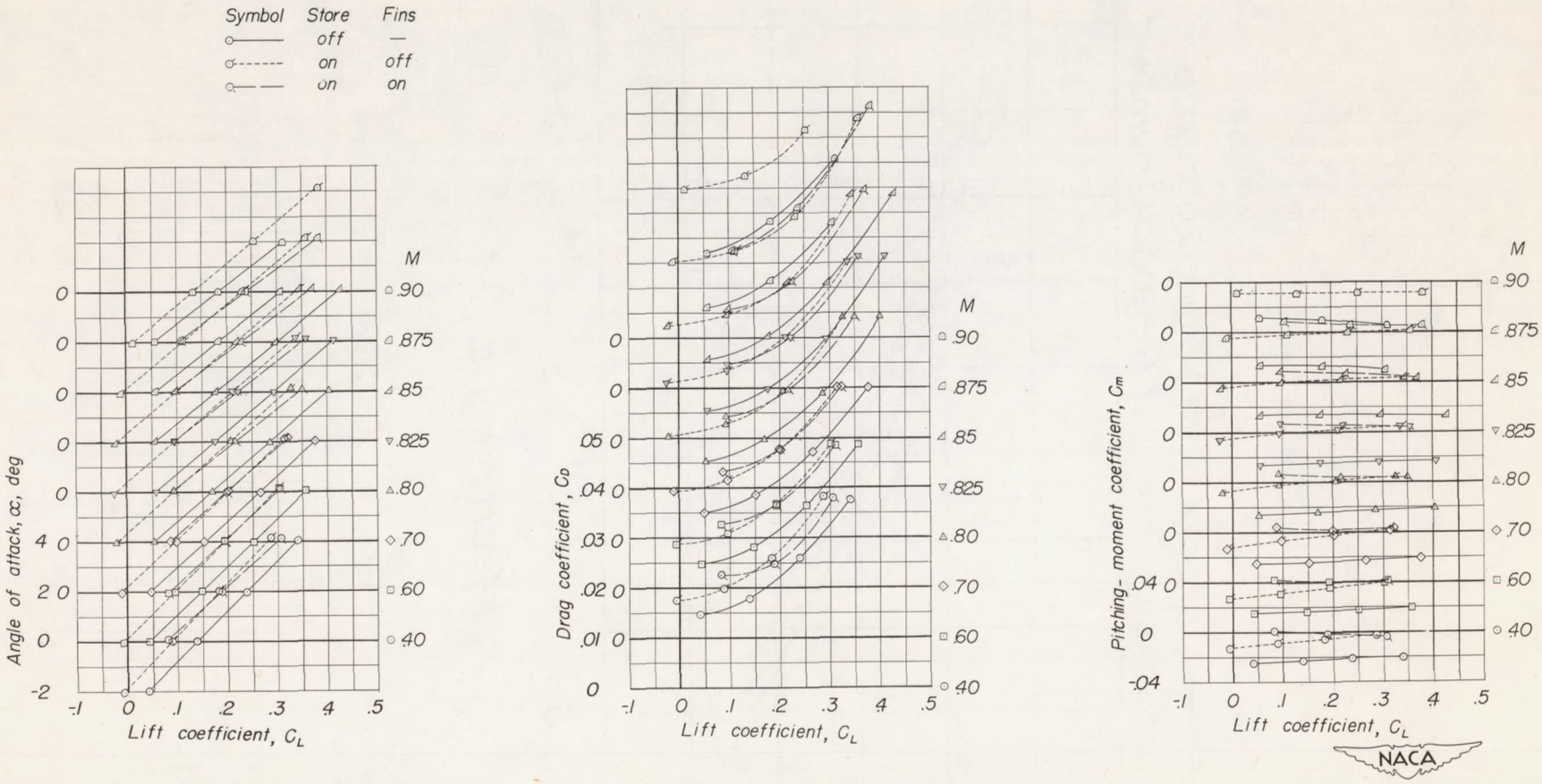

(a) Pylon-suspended wing store.

Figure 9.- Effect of several external-store installations on the aerodynamic characteristics of the wing-fuselage combination.

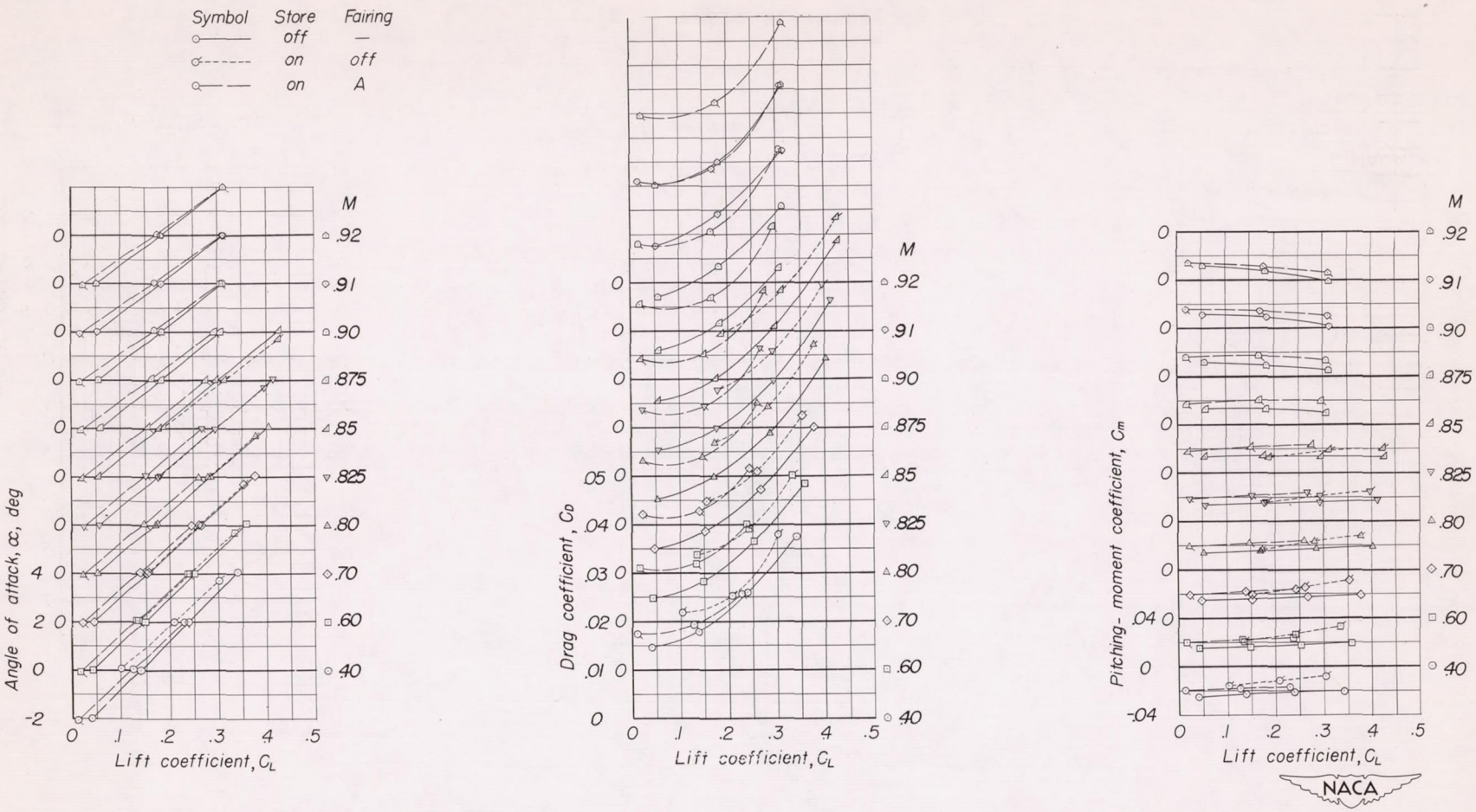

(b) Flush wing store.

Figure 9.- Continued.

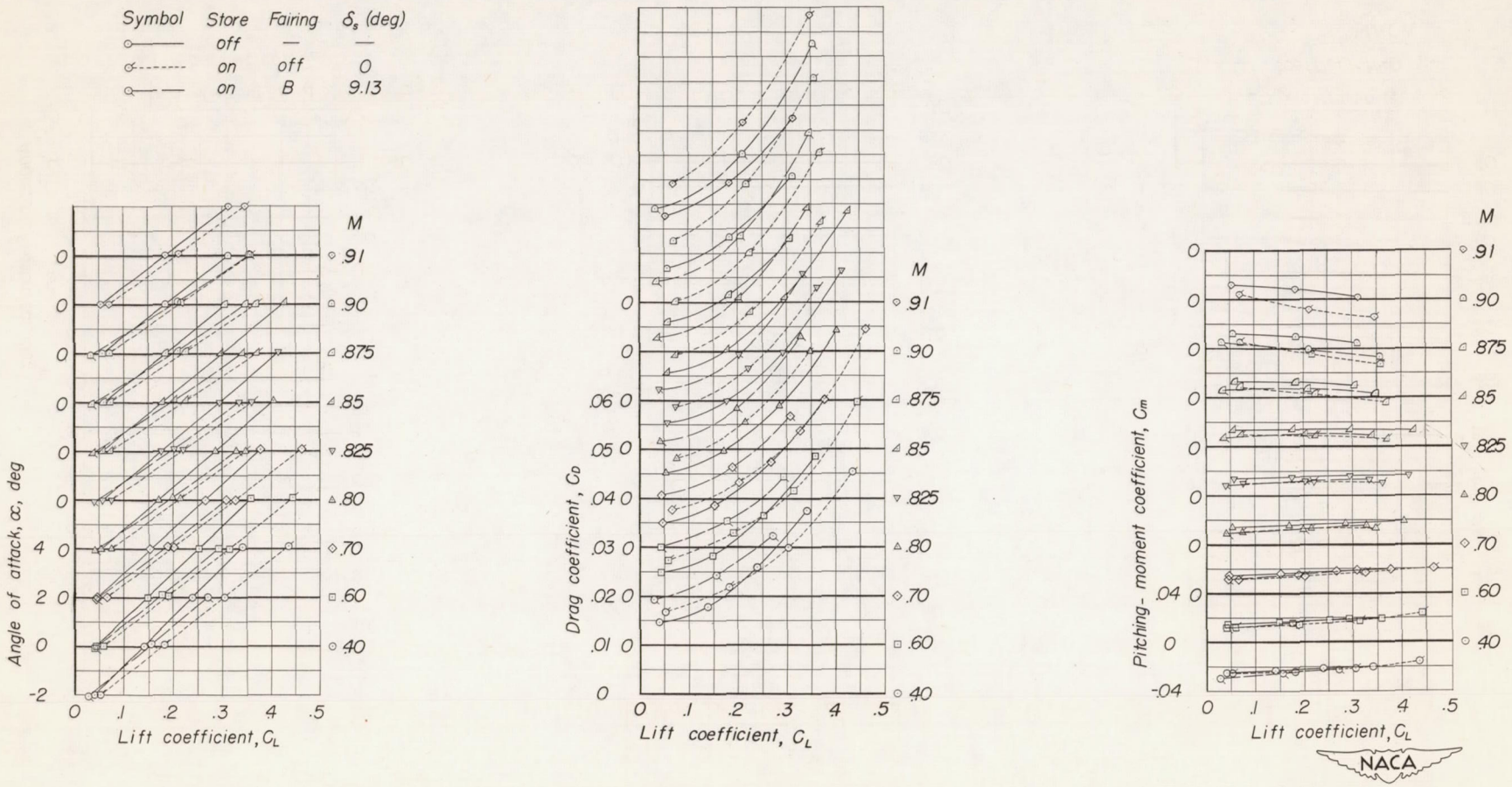

(c) Forward tip store.

Figure 9.- Continued.

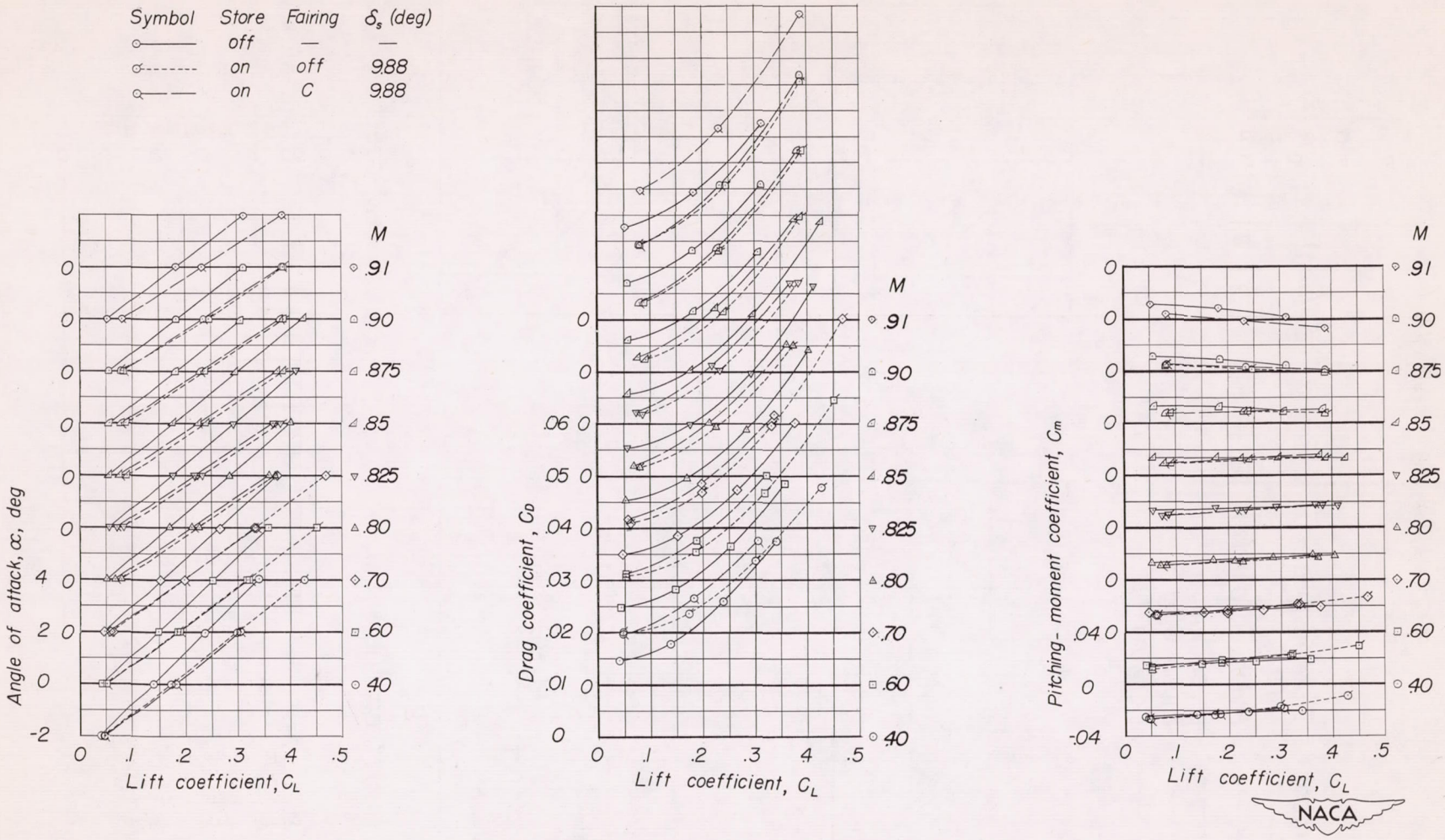

(d) Central tip store.

Figure 9.- Concluded.

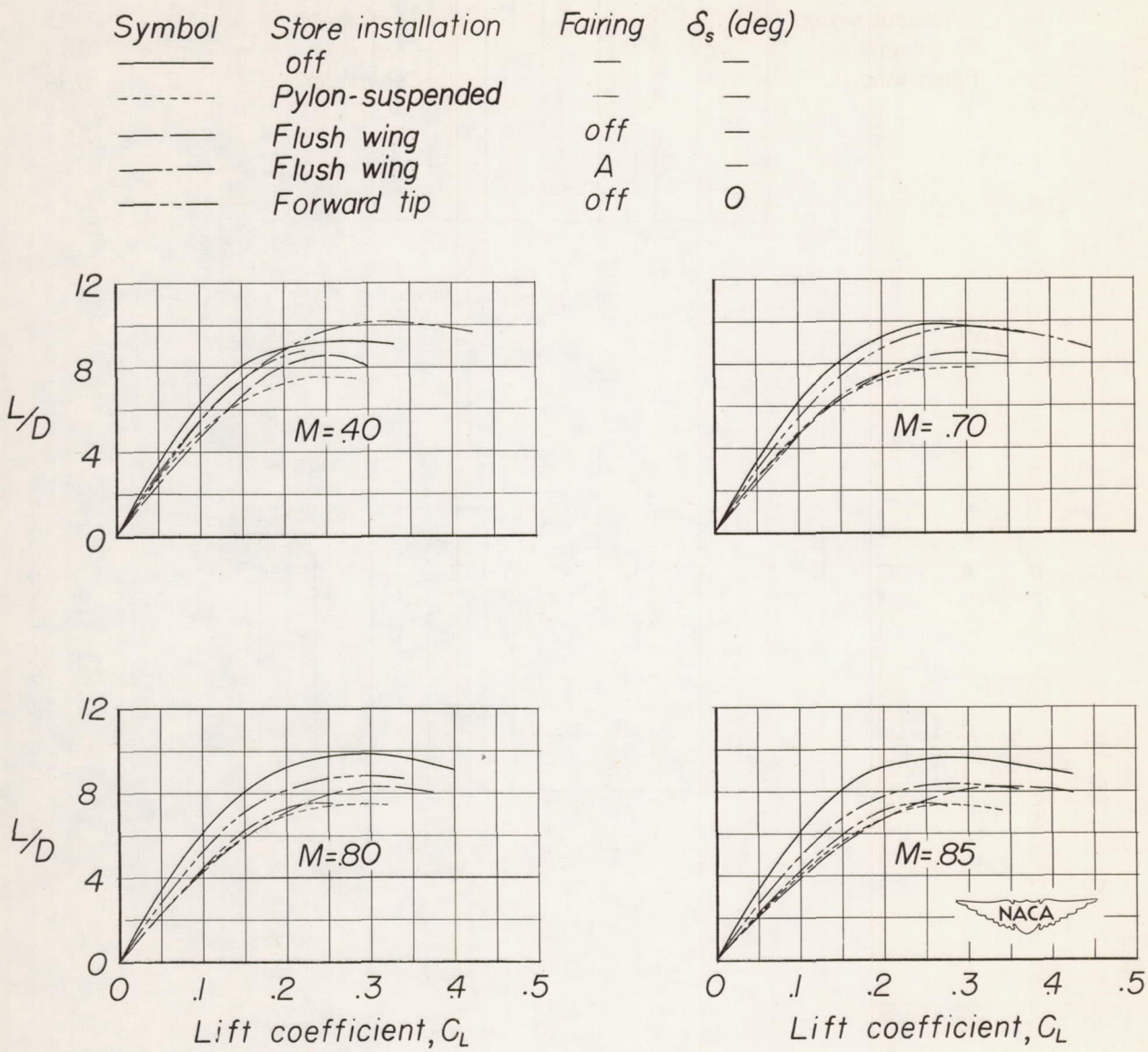

Figure 10.- Effect of several external-store installations on the lift-drag ratio of the wing-fuselage combination.

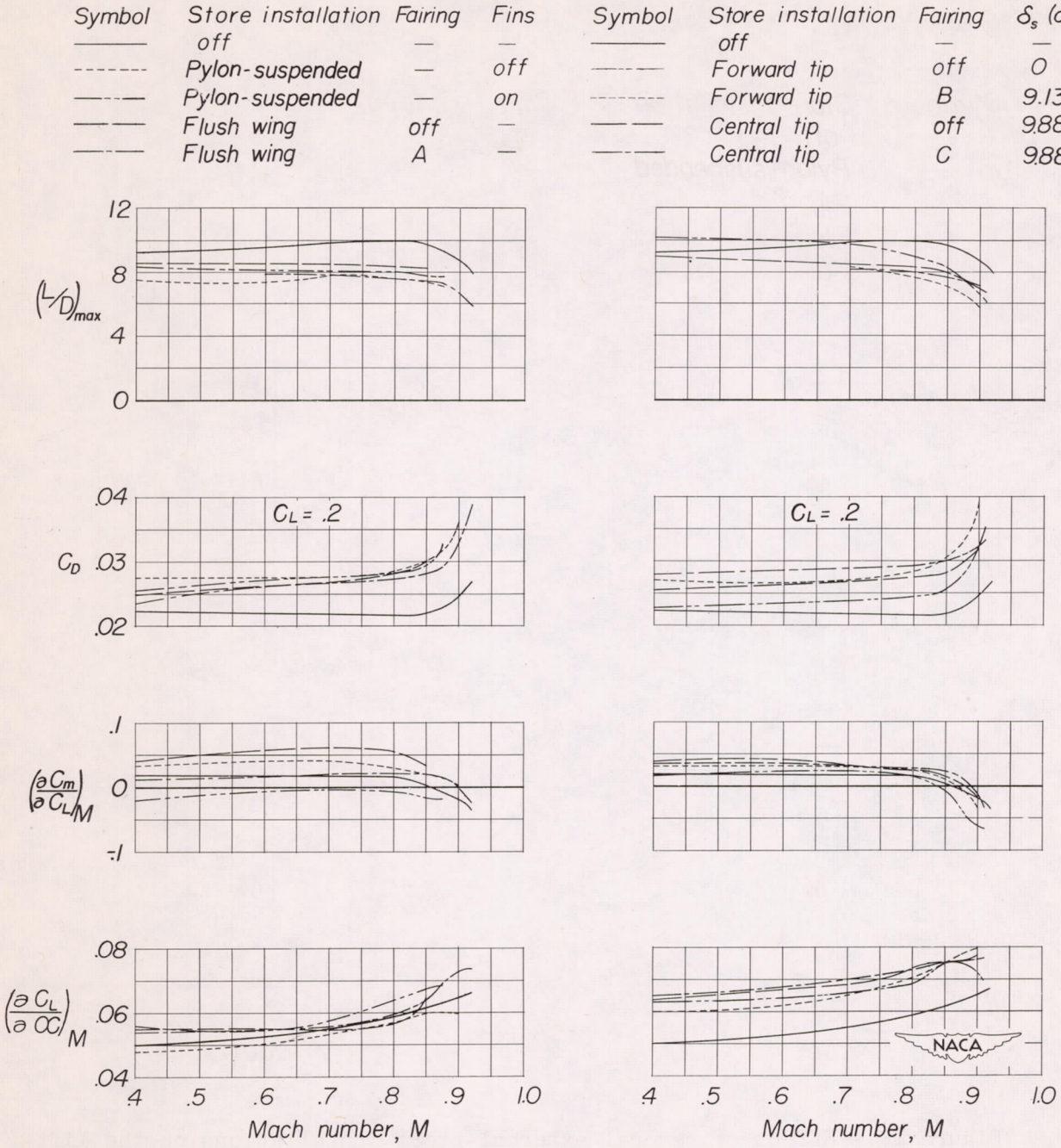

(a) Inboard under-wing installations. (b) Wing-tip installations.

Figure 11.- Effect of Mach number on the aerodynamic characteristics of the wing-fuselage combination with several external-store installations.