NACA RM L50L29

NACA

RESEARCH MEMORANDUM

SUMMARY OF SPIN AND RECOVERY CHARACTERISTICS OF 12 MODELS OF FLYING-WING AND UNCONVENTIONAL-TYPE AIRPLANES

By Ralph W. Stone, Jr. and Burton E. Hultz

Langley Aeronautical Laboratory
Langley Field, Va.

NATIONAL ADVISORY COMMITTEE
FOR AERONAUTICS
WASHINGTON

March 1, 1951
Declassified December 13, 1957

NATIONAL ADVISORY COMMITTEE FOR AERONAUTICS

RESEARCH MEMORANDUM

SUMMARY OF SPIN AND RECOVERY CHARACTERISTICS OF 12 MODELS OF FLYING-WING AND UNCONVENTIONAL-TYPE AIRPLANES

By Ralph W. Stone, Jr. and Burton E. Hultz

SUMMARY

A compilation is presented of free-spinning model results of investigations of the spin and recovery characteristics of 12 flying-wing and unconventional-type designs. The results were obtained from dynamic tests in the Langley 15-foot free-spinning tunnel and in the Langley 20-foot free-spinning tunnel which replaced it. Dimensional data, mass data, and three-view drawings of the free-spinning models which correspond to each of the 12 airplane designs are presented. The model test results presented include the spin and recovery characteristics of each model for various combinations of control deflections and for various loadings and dimensional configurations.

The results of the spin-tunnel investigations indicated that the effects of control setting and control movement on the spin and spin-recovery characteristics of the flying-wing and unconventional-type models were affected by changes in mass distribution in the same manner as for models of conventional configurations. For mass distributed chiefly along the fuselage, aileron-with and elevator-up settings were conducive of the best recovery; whereas elevator-down and aileron-against settings were conducive of the slowest recovery; for mass distributed chiefly along the wings, the converse was true. The influence of mass distribution on the effect of directional controls was dependent not only on the yawing moment produced but also on the accompanying rolling moment if the rolling moment was appreciable. Recovery techniques required were similar to those of conventional configurations except where unconventional-type control surfaces set up unusual moments when moved for recovery. The models generally recovered from inverted spins as readily as from erect spins and it was indicated that wing-tip parachutes are an effective means of terminating spins in an emergency. Although the results were not sufficiently extensive for evaluation in the form of a design criterion for satisfactory recovery, the data presented should help designers of flying-wing and unconventional-type airplanes anticipate probable spin and recovery characteristics.

INTRODUCTION

The results of investigations of the spin and recovery characteristics of numerous models tested in the Langley 15-foot free-spinning tunnel and the Langley 20-foot free-spinning tunnel during the years 1935 to 1946 have been used to establish empirical criterions for satisfactory spin recovery (references 1 and 2) which are generally applicable to airplanes having mass distributions typical of this time period and which are considered of conventional design (that is, having both horizontal and vertical surfaces at the tail end of the airplane). The results of several designs which may be generally termed unconventional or flying-wing-type configurations were also available and, because of increased interest in unconventional high-speed airplane configurations, it appeared desirable to evaluate these available results to determine criterions for satisfactory spin recovery similar to those evolved for conventional airplanes. Because the flying-wing and unconventional-type designs often utilized unusual and different methods of obtaining directional control, it was not possible to evaluate their spin-recovery characteristics in terms of a vertical-tail design parameter (tail-damping power factor) in the manner used for conventional designs (reference 1). Also, because of rather limited data available for these configurations, an alternate effective parameter could not be developed at this time. Results available for 12 designs of unconventional and flying-wing-type configurations have been summarized, however, and the more important spin and recovery characteristics are presented in this paper.

The effects of mass distribution and center-of-gravity location were determined for many of the models as were the effects of geometric modifications designed in an attempt to improve the spin-recovery characteristics. The investigations included the determination of the effectiveness for spin recovery of several types of controls which are peculiar to flying-wing and unconventional-type airplanes.

The spin and recovery characteristics of each model are presented for the various control configurations, mass distributions, and dimensional configurations tested. Dimensional data, mass data, and a three-view drawing of each of the various free-spinning models are included. The data presented are intended to help designers of unconventional and flying-wing-type airplanes anticipate probable spin and recovery characteristics.

SYMBOLS

b wing span, feet

S wing area, square feet

$\bar{c}$	mean aerodynamic chord, inches
c	wing local chord, inches
$x/\bar{c}$	ratio of distance of center of gravity rearward of leading edge of mean aerodynamic chord to mean aerodynamic chord; positive when center-of-gravity position is rearward of leading edge of $\bar{c}$
$z/\bar{c}$	ratio of distance between center of gravity and thrust line or fuselage reference line to length of mean aerodynamic chord; positive when center of gravity is below thrust line
m	mass of airplane, slugs
ρ	air density, slug per cubic foot
μ	airplane relative density $(m/\rho Sb)$
I_X, I_Y, I_Z	moments of inertia about X, Y, Z body axes, respectively, slug-feet^2
$\frac{I_X - I_Y}{mb^2}$	inertia yawing-moment parameter
$\frac{I_Y - I_Z}{mb^2}$	inertia rolling-moment parameter
$\frac{I_Z - I_X}{mb^2}$	inertia pitching-moment parameter
α	angle between thrust line or fuselage reference line and vertical, degrees, approximately equal to absolute value of angle of attack at plane of symmetry
ϕ	angle between span axis and horizontal, degrees; on the charts U or D means inboard wing (right wing in a right spin) up or down, respectively, with relation to the horizontal
V	full-scale true rate of descent, feet per second
Ω	full-scale angular velocity about spin axis, revolutions per second

δ_r deflection of rudder, degrees

δ_e deflection of elevator, degrees

δ_a deflection of ailerons, degrees

U elevator up

N elevator neutral

D elevator down

ΔC_l rolling-moment coefficient due to control deflection $\left(\text{Rolling moment}/\frac{1}{2}\rho V^2 bS\right)$

ΔC_n yawing-moment coefficient due to control deflection $\left(\text{Yawing moment}/\frac{1}{2}\rho V^2 bS\right)$

MODELS

The dimensional and mass characteristics of the airplanes simulated by the models are presented in tables I and II, respectively. Three-view drawings of the models are presented in figure 1. The models were constructed as described in reference 3. Briefly, each model was constructed primarily of balsa to be dimensionally similar and was ballasted with lead weights to be dynamically similar to the particular airplane it represented at a given test altitude. A remote-control mechanism was installed in the model to actuate the controls for recovery tests. Sufficient moments were exerted on the control surfaces during recovery tests to move the controls rapidly to the desired positions without regard to the actual forces required to move the controls of the airplane. Parachutes used for spin-recovery parachute tests were of the flat circular type, made of silk, and had drag coefficients of approximately 0.7 based on the surface area of the canopy when spread out flat.

The lateral and longitudinal controls for some of the models presented herein are combined in one pair of control surfaces designated as elevons. Longitudinal control is obtained by deflection of the elevons together and lateral control is obtained by differential deflection of the elevons. In this paper, elevon deflections for longitudinal and lateral control will be referred to, generally, as elevator and aileron deflections, respectively.

Wind Tunnel and Testing Techniques

The model tests were performed in the Langley 15-foot free-spinning tunnel and in the Langley 20-foot free-spinning tunnel which replaced it. The operation of the Langley 15-foot free-spinning tunnel is described in reference 3 and operation of the Langley 20-foot free-spinning tunnel is generally similar. In brief, models are launched with rotation into the vertically rising air stream of the tunnel and the airspeed is varied by the operator until it equals the rate of descent of the model. The model is thus maintained at approximately eye level in the test section. With the model spinning freely, observations of its general behavior are made, and motion-picture records are obtained. Figure 2 shows a typical model spinning in the Langley 20-foot free-spinning tunnel. After observation of the fully developed spin, recoveries are attempted. The turns for recovery are measured from the time the controls are moved to the time the spin rotation ceases.

Spin tests generally are made to determine the spin and recovery characteristics of the model for the normal spinning control configuration (elevator full up, ailerons neutral, and rudder full with the spin) and at various other aileron-elevator combinations including neutral and maximum deflections. The control deflections used were measured perpendicular to the hinge lines. Recoveries are generally attempted by rapid full rudder reversal, although for the investigations presented herein, some recoveries were attempted by other control manipulations which are specifically noted on the charts. For spins which had rates of descent in excess of that which could be readily attained in the tunnel, the rate of descent was recorded as greater than the velocity at the time the model hit the safety net, as >300. For recovery attempts in which the model struck the safety net before recovery could be effected, because of the wandering or oscillatory nature of the spin or because of an unusually high rate of descent, the number of turns from the time the controls were moved to the time the model struck the safety net was recorded. This number indicates that the model required more turns to recover from the spin than shown, as, for example, >3. A >3-turn recovery, however, does not necessarily indicate an improvement over a >7-turn recovery. The symbol ∞ is used on the charts to indicate that recovery required more than 10 turns. For a condition in which the model recovered without movement of the controls after having been launched in a spinning attitude with the controls set for a spin, the result is recorded on the charts as "no spin."

The recovery characteristics of a model have been considered satisfactory if recovery from the spin at the normal spinning control configuration (rudder full with, elevator full up, and ailerons neutral) requires 2 turns or less and if small deviations from this control configuration do not cause recovery to exceed $2\frac{1}{4}$ turns. Small deviations are considered to be those which allow for a variation in the deflection of any given control

setting by as much as one-third from its intended position. This criterion for satisfactory spin recovery has been adopted on the basis of full-scale-airplane spin-recovery data and corresponding model test results (reference 4). The full-scale results available in reference 4 were generally for conventional-type airplanes with horizontal tails, but unless actual full-scale spins of unconventional or flying-wing type airplanes subsequently prove otherwise, it is felt that the criterion for satisfactory recovery specified may be generally applicable to all types of airplane designs. Unpublished observation of airplane motions for some of the unconventional and flying-wing-type configurations presented herein have indicated that the model results give qualitative agreement, at least, with the motions obtained on the airplanes.

The spin-recovery parachute tests were performed in the manner described in reference 5. In brief, recoveries were generally attempted by parachute action alone, the rudder being maintained with the spin. The parachutes were opened by use of a remote-control mechanism.

PRECISION

The results of the free-spinning-tunnel tests presented are believed to be the true values given by the model within the following limits:

α, deg	± 1
ϕ, deg	± 1
V, percent	± 5
Ω, percent	± 2
Turns for recovery:	
From motion-picture records	$\pm\frac{1}{4}$
From visual estimate	$\pm\frac{1}{2}$

All recoveries presented herein were obtained from motion-picture records expect where otherwise specifically noted on the charts.

The preceding limits may have been exceeded for certain spins in which it was difficult to control the model in the tunnel because of the high rate of descent or because of the wandering or oscillatory nature of the spin. Comparison between model and airplane spin results (reference 4) indicates that spin-tunnel results are not always in complete agreement with airplane results. In general, when the model spun at an angle of attack less than 45° the corresponding airplane spun at a larger angle

of attack, and when the model spun at an angle of attack greater than 45°, the corresponding airplane spun at a smaller angle of attack. Generally, the spin at the lower angle of attack (either model or airplane) was associated with the higher rate of descent. The airplane generally spun with its inner wing down more than the inner wing of the corresponding model. The comparison made in reference 4 for 60 different designs indicated that approximately 90 percent of the models satisfactorily predicted full-scale recovery characteristics and that the remaining 10 percent of the models were of some value in predicting details of the full-scale results such as proper recovery technique, aileron effects, and the motion in the developed spin. The designs compared in reference 4 were, in general, for conventional airplanes.

The accuracy of measuring the weight and mass distribution of the models is believed to be within the following limits:

Weight, percent	± 1
Center-of-gravity location, percent $\bar{c}$	± 1
Moments of inertia, percent	± 5

The controls were set with an accuracy of $\pm 1^{\circ}$.

TEST CONDITIONS

The variations of the mass-distribution parameters for the various loadings investigated for each model are presented in figure 3. Figure 4 shows the variations of the control-surface deflections with stick positions for the models which combined the longitudinal and lateral controls in one control surface. The dimensional modifications tested during the investigations summarized in this paper are presented in figure 5. Figure 6 shows the original rudders tested on models 1 to 4, these rudders are of the drag type and are mounted at the wing tips. The control configurations tested on each specific model for each model configuration are indicated in charts 1 to 14 with the results.

RESULTS AND DISCUSSION

The erect spin and recovery data for the 12 models summarized herein are presented in charts 1 to 12. Inverted spin data and spin-recovery parachute data available for some of the 12 models are presented in

charts 13 and 14, respectively. The results of tests with dimensional modifications on the various models are listed with their indicated effectiveness in table III and in general are presented in the corresponding charts 1 to 12.

Erect Spins

The spin and recovery characteristics of models 1 to 6 (charts 1 to 6) were found to be in general agreement with references 1 and 6 as regards the influence of the mass distribution on the effectiveness of the controls during the spin and the recovery. When the mass of the models was distributed primarily along the wings, for example, aileron settings against the spin (stick left in a right spin) and down-elevator settings (stick forward) were generally favorable. For these control settings, steeper spins with more rapid recoveries were generally obtained than were obtained for other control settings. These control settings were also conducive of no-spin conditions. For this mass distribution, reversal of rudders which primarily gave a yawing moment only were ineffective; whereas movement of the elevator down appeared to be the most effective method of obtaining recovery. Such control movement for recovery is consistent with that indicated for conventional airplanes for similar loadings. When the mass of the models was distributed primarily along the fuselage, aileron-with settings and elevator-up settings were generally most effective in causing steep spins from which recovery was most easily obtained. For this mass distribution, movement of the rudder against the spin, when the rudder primarily gave a yawing moment only, generally appeared to be the most effective method of obtaining recovery. These results of control effectiveness are also consistent with those indicated for conventional airplanes for similar loadings (references 1 and 6).

Some exceptions to the general effects of control settings and movements on the spin and recovery were obtained, however. When, for example, model 6 had its loading distributed mainly along the wings (chart 6) full-down elevator and full ailerons against the spin sometimes caused a relatively flat spin from which recovery was unsatisfactory. For this model and other similar models, combination of the longitudinal and lateral controls in a single surface caused unusually large deflections of the surfaces when both full elevator and aileron controls were applied. When the elevator was full down and the ailerons were full against the spin, the inboard control surface (that on the right wing in a right spin) had a large downward deflection; whereas the outboard control surface was nearly neutral. It is believed that this large downward deflection of the inboard control caused unusually large pro-spin yawing moments which overcame the possible favorable effect of the rolling moment due to the aileron-against setting. For loadings for which the mass was distributed primarily along the fuselage, control settings of the elevator

full up and the ailerons full with the spin tended to be similarly detrimental.

Models 1 to 4 (charts 1 to 4) had rudders which did not primarily provide yawing moments only but also provided appreciable rolling moments. The rudders for models 1 to 4 are shown in figure 6. Typical of these rudders are those of models 2 and 3, similar models with different rudders. The rudder of model 2 is a spoiler-like surface which on the airplane protruded downward and forward through the lower surface of the wing; a pitch flap moved upward in conjunction with downward movement of the spoiler surface. On model 3 two split flap-like surfaces, one on the upper surface and one on the lower surface of the wing, were both deflected for rudder movement. For both models, the rudders on the right wing functioned and those on the left wing remained neutral for a right turn. These rudders may generally be termed scoop-type and split-type rudders, respectively.

A comparison of the aerodynamic yawing- and rolling-moment characteristics of the two general types of rudders (measured on the free-flight-tunnel balance, described in reference 7) is shown in figure 7. The results indicate that, for angles of attack above 34°, setting the rudder against the spin (left rudder pedal forward in a right spin) for the scoop-type rudder produced a rolling-moment increment in the same direction as would be obtained by setting the ailerons against the spin (left stick in a right spin); whereas for the split-type rudder, a rolling-moment increment in the same direction as would be obtained by setting the ailerons with the spin was produced. The yawing moments contributed by both types of rudders were approximately the same. The results are consistent with those indicated in reference 6 for conventional designs with loadings with the mass distributed primarily along the wings in that rolling moments caused by aileron-against settings were favorable and rolling moments caused by aileron-with settings were unfavorable to spin recovery. Thus for wing-heavy loadings, the scoop-type rudders when moved against the spin gave favorable rolling moments for spin recovery and the split-type rudders when moved against the spin produced unfavorable rolling moments. Conversely, it was indicated that maintaining the split-type rudders with the spin was favorable for spin recovery; whereas maintaining the scoop-type rudders with the spin was unfavorable. As is further indicated in reference 6, for loadings in which the mass is distributed primarily along the fuselage, aileron-with settings are favorable. It appears probable that, for designs with the loading primarily along the fuselage, scoop-type rudders when set against the spin would have produced unfavorable rolling moments for spin recovery; whereas split-type rudders would have produced favorable rolling moments.

Models 5 and 6 had rudder control surfaces that primarily provided a yawing moment only. Model 5 had dual rudders and model 6 was tested both with single and dual rudders. For models 5 and 6 (charts 5 and 6),

when the mass distribution was primarily along the fuselage, rudder reversal was generally effective in producing recovery; whereas for model 6, rudder reversal was ineffective in producing recovery when the mass distribution was primarily along the wings. These results are in accord with the results of reference 1 for conventional airplane designs. Thus rudders which primarily provided yawing moment only appear to be similarly effective in producing recovery for airplanes of the flying-wing type as for airplanes of conventional designs, depending primarily on mass distribution. It has been noted for one model (model 6) that single or dual vertical tails appeared equally as effective provided they had equivalent vertical-tail volume (reference 8).

Model 7 had a delta-wing plan form and a loading for which the weight was very heavily distributed along the fuselage. The results of an extensive investigation on model 7 (reference 9) indicate that spins may not be obtained for values of the inertia yawing-moment parameter $\left(I_X - I_Y/mb^2\right)$ between approximately -450×10^{-4} to -750×10^{-4} and that flat spins will generally be obtained for larger or smaller values of the inertia yawing-moment parameter. Reversal of the rudder was generally ineffective in stopping the spin rotation except when sufficiently large dual vertical tails and rudders were used (reference 9). These large vertical tails are shown in figure 5 and the results are noted in table III. Movement of the ailerons with the spin, however, was generally effective for terminating the spin rotation. This effect is in agreement with the results obtained during an extensive investigation on a swept-wing model having a horizontal tail. This model was tested at fuselage heavy mass distributions (reference 10) beyond the mass range of references 1 and 6. For all loading conditions tested on model 7 after spin rotation had ceased, the model tended to glide at a flat attitude (very high angle of attack) decreasing its angle of attack relatively slowly except when the elevator was full down.

Model 8 had a sweptforward wing and generally tended to spin flat with a wide radius, very slow rotation, and large oscillations in roll, pitch, and yaw (chart 8). Rudder reversal generally stopped the rotation but the model tended to glide at very large angles of attack above the stall and the oscillations continued after the rotation ceased. When the elevator was reversed to full down following rudder reversal, however, the model tended to dive after the spin rotation ceased. Unpublished full-scale results on this design indicated that accurately timed movement of the stick forward during the oscillations was required to regain unstalled flight. The results of an extensive investigation of modifications to this design and a brief comparison with flying-wing types with sweptback wings indicate that major modifications would be needed to improve the characteristics of this design and that in this instance the sweptforward wing appeared to cause the unsatisfactory trim characteristics. Installation of a large horizontal tail and increased

vertical-tail length made the model's trim and spin characteristics satisfactory. The results with the horizontal tail installed are noted in table III and the modification is shown in figure 5.

Models 9 and 10 were similar designs having approximately circular plan form, dual vertical tails mounted on the upper surface of the wing, and horizontal surfaces with control surfaces extending from the nearly circular plan form for longitudinal and lateral control. The spin and recovery characteristics of model 9 (chart 9) were not appreciably affected by changes in mass distribution for the range of values of inertia yawing-moment parameter tested $\left(I_X - I_Y/mb^2 \text{ from } -208 \times 10^{-4} \text{ to } 590 \times 10^{-4}\right)$. Increasing the relative density for model 9, however, had an adverse effect upon spin recovery. The results for the largest relative density for model 9 and the results for model 10 (chart 10) which were for a similarly large relative density, indicated poor recovery characteristics. Satisfactory spin recoveries were obtained for model 9 by a special technique for which the leading edges of the horizontal surfaces were moved down and the stick was held back and moved against the spin (left in a right spin) while the rudder was reversed. Satisfactory recoveries were obtained on model 10 only with the installation of modifications and following a recovery technique in which the stick was held full back and moved against the spin while the rudder was reversed, a technique similar to that used for model 9. The satisfactory modifications used for model 10 were a supplementary vertical tail (supplementary tail 2, fig. 5(g)) behind the trailing edge, a large semispan spoiler (spoiler no. 4, fig. 5(g)) beneath the outer wing in a spin (left wing in a right spin), or two large vertical fins (vertical fin 7, fig. 5(g)) mounted on the horizontal control surfaces.

Models 11 and 12 were tail-first or canard-type designs. The spinning characteristics of these models (charts 11 and 12) were not affected by small variations in mass distribution or by small movements of the center of gravity. After recovery from the spin, model 11 trimmed at a high angle of attack (approx. 80°) even when the elevator was set to simulate a stick position of full forward. Modifications which caused model 11 to trim in a normal flight attitude after the spinning rotation had been stopped were the addition of large fillets or drooping enlarged ailerons 22°. Prior to spin tests, model 12 was designed so that it would not trim at high angles of attack by installing a large elevator with increased deflections over those of model 11, and by installing large wing-tip trimmers. The configuration for model 12 with these changes is shown in figure 1(l). Satisfactory spin recoveries in which the model recovered in a dive were obtained for model 12 by application of full rudder reversal when the elevator was set to simulate a stick position of full forward.

Inverted Spins

Inverted spin and recovery characteristics were available for 10 of the 12 models presented herein. These results are presented in chart 13. A brief analysis of the results based on reference 11, a summary of inverted spin results, is presented.

When the ailerons were set with the spin, for the fully developed inverted spins presented, the ailerons were set to simulate a stick position to the pilot's left when spinning to the pilot's right with the rudder to the pilot's right (controls crossed). When the ailerons were set against the inverted spin, the controls were together. Elevator-up simulated stick forward and elevator-down simulated stick back. In chart 13, the angle of wing tilt is given as up or down relative to the ground.

Model 1 would spin inverted only when the ailerons were neutral or with the spin. Recoveries from these spins were generally unsatisfactory. The inverted spin results were generally similar to those for erect spins. This is probably an indication that exposed area which tended to damp the rotation was approximately the same for both erect and inverted spins.

Model 2 would spin inverted only when the ailerons were with the spin with the stick neutral or forward longitudinally. The inverted spin characteristics were considered somewhat improved over the erect spin characteristics in that spins were obtained for fewer control settings (that is, more no-spin conditions were obtained).

Model 4 would generally not spin inverted when the rudders were set with the spin (right rudder pedal forward in an inverted spin to the pilot's right); whereas it did spin erect. Model 4, however, would spin inverted, when the rudders were set against the spin (data not presented).

Model 5 would spin inverted for most control configurations; recovery by rudder reversal was, however, satisfactory. These results are somewhat better than those obtained erect, probably because more vertical fin and rudder area were unshielded in the inverted spin than in the erect spin.

Model 6 would spin inverted only with ailerons and rudder with the spin. Satisfactory recoveries were obtained by neutralizing all of the controls.

Model 7 would spin inverted for a loading condition for which it would not spin erect. The model spun inverted, however, only when the ailerons were against the spin and the stick was neutral or forward longitudinally. The rudder of this model was above the wing and shielded in erect spins, whereas it was relatively unshielded in inverted spins. Thus for this

design it appears that in an erect attitude the rudder which was shielded did not supply sufficient pro-spin yawing moment to cause the model to rotate; whereas in an inverted attitude the pro-spin yawing moment of the unshielded rudder was apparently sufficient to cause the model to spin. Satisfactory recovery by rapid rudder reversal was obtained and it appears that, on a corresponding airplane, neutralization of the stick laterally and longitudinally also would be desirable.

Model 8 would generally not spin inverted but tended to become erect and, as in the case of erect spins, tended to remain at a flat erect attitude. The vertical fin and rudder of this design, which had a relatively large aspect ratio and was mounted well above the fuselage center line, was unshielded in the inverted attitudes and may have contributed a rolling moment which caused the model to roll erect following launching into the tunnel inverted.

Model 10 had inverted spins which were similar to the erect spins, recoveries from which were unsatisfactory.

Models 11 and 12 would spin inverted generally when the ailerons were neutral or with the spin. Reversal of the rudder caused the spinning rotation to stop quickly for both models. Model 11 remained in an inverted stalled attitude after the rotation had ceased, for all elevator settings. Model 12, however, dived into a normal flight attitude when the elevator was set to cause a nose-down pitching moment from the inverted attitude. These results are similar to those for erect spins.

The results of the inverted spin tests of the various models are in general accord with inverted spin and recovery results for conventional designs as indicated in reference 11, in that rearward movement of the stick, and aileron-against settings generally tended to be beneficial.

Spin-Recovery Parachutes

The results of investigations made to determine the effect of spin-recovery parachutes were available for six of the models. The results (chart 14) indicate that, in general, parachutes attached to the outer wing tip in a spin (left wing in a right spin) will generally cause satisfactory spin recovery by parachute action alone for emergency purposes. The primary disadvantage of wing-tip spin-recovery parachutes is the danger of opening the parachute on the inboard wing tip (right tip in a right spin) rather than the outboard wing tip. Under such circumstances, the spin may be flattened and recovery made impossible. The results of tests for conventional designs (reference 12) and for one model reported herein indicated that use of parachutes on both wing tips when opened simultaneously required parachutes of approximately twice the diameter of a single wing-tip parachute used only on the outer wing tip.

Opening two parachutes simultaneously has the advantage of eliminating the danger of opening the wrong wing-tip parachute. The experimental results indicated that a towline length equal to approximately the semispan of the wing should be used.

Model 8 was tested only with a parachute attached to the tail cone for which satisfactory recoveries were obtained. On model 10 a single wing-tip parachute, required for satisfactory recovery, was excessively large but satisfactory recoveries were obtained by simultaneously opening moderate sized tail and wing-tip parachutes. The tail parachute was mounted on the arresting gear mast shown in figure 8.

Reference 12 presents a method whereby the size wing-tip parachute required for satisfactory spin recovery may be calculated. As is indicated in reference 12, calculations by this method correlate satisfactorily with experimental data for flying-wing-type configurations.

CONCLUSIONS

Based on the spin and recovery characteristics of models of 12 flying-wing and unconventional-type designs investigated in the Langley 15-foot free-spinning tunnel and the Langley 20-foot free-spinning tunnel, the following conclusions are made.

1. The effect of aileron and elevator control settings on spin and recovery characteristics was generally dependent upon mass distribution in the same manner as for conventional configurations: that is, for mass distributed chiefly along the fuselage, aileron-with and elevator-up settings were conducive of the best recovery, whereas elevator-down and aileron-against settings were conducive of the slowest recovery; for mass distributed chiefly along the wings, the converse was true. The influence of mass distribution on the effect of directional controls was dependent not only on the yawing moment produced but also on the accompanying rolling moment if the rolling moment was appreciable.

2. Recovery from inverted spins generally was obtained as readily as from erect spins. It appears that the most rapid recoveries from inverted spins would have been obtained by movement of the stick back longitudinally and against the spin laterally and of the rudder against the spin.

3. A single wing-tip parachute on the outer wing tip in a spin generally was an effective spin-recovery device for emergency recovery of unconventional and flying-wing-type designs.

Langley Aeronautical Laboratory
National Advisory Committee for Aeronautics
Langley Field, Va.

REFERENCES

1. Neihouse, Anshal I., Lichtenstein, Jacob H., and Pepoon, Philip W.: Tail-Design Requirements for Satisfactory Spin Recovery. NACA TN 1045, 1946.

2. Neihouse, A. I.: Tail-Design Requirements for Satisfactory Spin Recovery for Personal-Owner-Type Light Airplanes. NACA TN 1329, 1947.

3. Zimmerman, C. H.: Preliminary Tests in the NACA Free-Spinning Wind Tunnel. NACA Rep. 557, 1936.

4. Berman, Theodore: Comparison of Model and Full-Scale Spin Test Results for 60 Airplane Designs. NACA TN 2134, 1950.

5. Kamm, Robert W., and Malvestuto, Frank S., Jr.: Comparison of Tail and Wing-Tip Spin-Recovery Parachutes as Determined by Tests in the Langley 20-Foot Free-Spinning Tunnel. NACA ARR L5G19a, 1946.

6. Neihouse, A. I.: A Mass-Distribution Criterion for Predicting the Effect of Control Manipulation on the Recovery from a Spin. NACA ARR, Aug. 1942.

7. Shortal, Joseph A., and Draper, John W.: Free-Flight-Tunnel Investigation of the Effect of the Fuselage Length and the Aspect Ratio and Size of the Vertical Tail on Lateral Stability and Control. NACA ARR 3D17, 1943.

8. Gale, Lawrence J., and Pumphrey, Norman E.: Spin and Recovery Characteristics of a Model of a Fighter Type Airplane without a Horizontal Tail and Having a Single Vertical Tail or Twin Vertical Tails. NACA RM L50F19a, 1950.

9. Klinar, Walter J., and Jones, Ira P., Jr.: Spin-Tunnel Investigation of a Model of a 60° Delta-Wing Airplane to Determine the Spin, Recovery, and Longitudinal Trim Characteristics throughout an Extensive Range of Mass Loadings. NACA RM L9L06, 1950.

10. Berman, Theodore: Spin-Tunnel Investigation of a Model of a Swept-Wing Fighter Airplane over a Wide Range of Fuselage-Heavy Loadings. NACA RM L50L08, 1950.

11. MacDougall, George F., Jr.: Tests of Inverted Spins in the NACA Free-Spinning Tunnels. NACA ARR Dec. 1943.

12. Malvestuto, Frank S., Jr.: Method of Estimating the Minimum Size of a Tail or Wing-Tip Parachute for Emergency Spin Recovery of an Airplane. NACA RM L8D27, 1948.

TABLE I.- DIMENSIONAL CHARACTERISTICS OF MODELS TESTED

[Model values are presented in terms of corresponding airplane values.]

Model	1	2	3	4	5	6	7	8	9	10	11	12
Model scale	1/16	1/20	1/57.33	1/16	1/17.54	1/20	1/20	1/17.8	1/16	1/16	1/16	1/16.95
Over-all length, ft	23.58	17.78	50.90	14.25	36.44	20.45	41.37	29.40	26.64	28.13	27.40	29.58
Wing:												
Span, ft	40.59	60.00	172.00	39.00	38.67	26.83	29.42	54.0	23.33	23.33	36.98	40.57
Area, sq ft	309.32	490.0	4020.0	293.31	496.00	200.00	375.0	356.0	427.5	427.0	191.0	208.3
Aspect ratio	5.33	7.36	7.36	5.19	3.01	3.60	2.31	8.20	1.27	1.27	7.00	7.91
Root chord, in.	148.48	157.00	450.00	141.65	194.00	123.00	305.80	116.40	280.16	280.16	92.00	92.00
Tip chord, in.	24.80	39.00	112.00	35.92	116.00	4.28	0	44.00	---	---	35.50	33.55
Taper ratio	0.167	0.248	0.249	0.253	0.600	0.420	0	0.376	---	---	0.386	0.364
M.A.C., ($\bar{c}$), in.	103.04	109.80	315.00	102.33	157.0	93.68	203.89	85.82	238.00	238.00	67.71	67.69
L.E. $\bar{c}$ rearward L.E. root chord	53.28	69.70	200.00	49.30	83.56	62.48	101.91	-30.00	10.5	10.02	57.0	61.08
Twist, deg	3.0	4.0	4.0	0	0	---	0	0	0	0	2.0 to -0.25	3.0 to -0.5
Dihedral, deg	Tip -43.0 Center 8.0	2.0	2.0	1.0	0	0	0	2.0	0	0	4.5	4.5
Sweepback, deg	29.3 LEW	21.9 c/4	25.8 LEW	27.8 LEW	35 c/4	38.1 c/4	60 LEW	-15 c/4	0 c/4	0 c/4	28.5 c/4	28.8 c/4
Airfoil section, root	NACA 66,2-018	NACA 65,3-019	NACA 65,3-019	NACA 66,2-018	CVA 4-(00) -(12)(40) -(1.1)(1.0)	NACA 0010-64 (normal to 40-percent chord line)	NACA $65_{(06)}$-006.5	NACA 23018	NACA 0016	NACA 0016	C-W 6500-0015	C-W 6500-0015
Airfoil section, tip	NACA 66,2x-012	NACA 65,3-018	NACA 65,3-018	NACA 66,2-018	CVA 4-(00) -(12)(40) -(1.1)(1.0)	---do---	NACA $65_{(06)}$-006.5	NACA 23012	NACA 0016	NACA 0016	C-W 6500-0015	C-W 6500-0015
Horizontal tail:												
Span, percent b/2	None	None	None	None	None	None	None	None	64.90	80.35	44.60	55.20
Area, sq ft	--do--	--do--	--do--	--do--	--do--	--do--	--do--	--do--	46.0	48.0	15.56	21.52
Longitudinal control:												
Type	Elevons	Elevons	Elevons	Elevons	Elevons	Elevons	Elevons	Elevator	Elevons	Elevons	Elevator	Elevator[a]
Area, sq ft	36.06	31.85	273.36	32.67	54.40	16.98	33.30	36.31	25.00	47.99	15.56	18.62
Distance to c.g., ft[b]	5.76	4.55	16.85	5.03	12.76	---	10.53	5.42	10.42	11.45	15.73	16.05
Vertical tail:												
Area, sq ft	31.82	0	0	37.15	122.40	20.10	67.00	43.50	28.30	28.42	25.20	27.80
Rudders:												
Type	Frise	Drag	Drag	Drag	Conventional	Conventional	Conventional	Conventional	Conventional	Conventional	Conventional	Conventional
Area, sq ft	[c]13.88	[c]14.63	[c]120.00	[c]21.68	[c]32.00	4.10	13.40	19.40	[c]13.20	[c]11.28	[c]11.44	[c]13.00
Dist. to c.g., ft[b]	7.18	7.68	22.05	5.65	15.15	9.33	11.86	12.31	15.00	12.53	5.00	7.92
Lateral control:												
Type	Elevons	Elevons	Elevons	Elevons[d]	Elevons	Elevons	Elevons	Conventional	Elevons	Elevons	Conventional	Conventional
Span, percent b/2	56.66	33.67	40.00	58.30	47.20	45.40	72.15	52.85	64.90	80.35	38.01	39.11
Area, sq ft	36.06	31.85	273.36	32.67	54.40	16.98	33.30	31.60	25.00	47.99	13.20	15.16
Maximum control deflections:												
Right δ_r, deg up[e]	90	[f]26	60	45	25 R	30	30 R	25 R	30 R	25 R	30 R	40 R
Right δ_r, deg down[e]	20	69	60	45	25 L	30	30 L	25 L	30 L	25 L	30 L	11 L
Left δ_r, deg up[e]	90	[f]26	60	45	25 R	30			30 R	25 R		11 R
Left δ_r, deg down[e]	20	69	60	45	25 L	30			30 L	25 L		40 L
δ_e, deg up[e]	30	24	20	[g]10.5, [h]21	30	20	20	30	15	45	30	60
δ_e, deg down[e]	20	11	10	[g]10.5, [h]7	20	10	20	20	15	15	15	60
δ_a, deg up[e]	30	17	15	[g]10.5, [h]10	15	15	15	20	30	10	20	38
δ_a, deg down[e]	15	13	15	[g]10.5, [h]10	15	15	15	15	30	10	14 1/2	9

[a]All movable elevator.

[b]Distances measured rearward to midpoint of control hinge line.

[c]Area of both rudders.

[d]Elevon balancers were used in conjunction with elevon, deflections ±20° (14° up and 42° down revised).

[e]Deflections measured from chord plane and perpendicular to hinge line.

[f]Deflection of pitch flap which moved up in conjunction with downward movement of drag rudder.

[g]Original deflections

[h]Revised deflections.

TABLE II.- MASS CHARACTERISTICS OF MODELS TESTED

[Model values are presented in terms of full-scale values]

Loading	Weight (lbs)	Center-of-gravity location		Relative airplane density, μ		Moments of inertia (slug-feet^2)			Mass parameters			Remarks
		$x/\bar{c}$	$z/\bar{c}$	Sea level	Test altitude	I_X	I_Y	I_Z	$\frac{I_X - I_Y}{mb^2}$	$\frac{I_Y - I_Z}{mb^2}$	$\frac{I_Z - I_X}{mb^2}$	
Model 1												
A	10,194	0.128	-0.003	10.59	12.62	9,313	6,834	15,635	48×10^{-4}	-169×10^{-4}	121×10^{-4}	Loading primarily along wings
B	10,194	.128	-.003	10.59	12.62	7,264	6,834	13,586	8	-129	121	Do.
C	10,194	.128	-.003	10.59	12.62	11,828	6,834	18,150	96	-217	121	Do.
D	10,194	.128	-.003	10.59	12.62	9,313	5,604	14,405	71	-169	98	Do.
E	10,194	.128	-.003	10.59	12.62	9,313	9,226	18,027	2	-169	167	Do.
F	10,194	.188	-.003	10.59	12.62	9,313	6,834	15,635	48	-169	121	Do.
G	10,194	.078	-.003	10.59	12.62	9,313	6,834	15,635	48	-169	121	Do.
H	9,755	.179	-.023	10.14	12.01	8,417	12,417	20,667	-80	-165	245	Loading primarily along fuselage
Model 2												
A	6,526	0.290	-0.040	2.91	4.62	19,138	2,274	21,298	231×10^{-4}	-260×10^{-4}	29×10^{-4}	Loading primarily along wings
B	6,526	.290	-.040	2.91	4.62	22,951	2,274	25,111	283	-312	29	Do.
C	6,526	.290	-.040	2.91	4.62	19,138	1,999	21,023	235	-261	26	Do.
D	6,768	.290	-.040	3.01	4.78	19,132	2,967	21,997	214	-251	37	Do.
E	6,694	.240	-.040	2.98	4.73	19,132	2,679	21,709	221	-254	33	Do.
F	6,675	.320	-.040	2.96	4.71	19,132	2,059	21,089	229	-255	26	Do.
G	6,538	.350	-.040	2.91	4.62	19,132	1,729	20,758	238	-260	22	Do.
H	6,914	.250	-.040	3.08	4.89	19,131	2,919	21,949	210	-246	36	Do.
Model 3												
A	155,000	0.275	-0.014	2.93	5.50	3,380,000	433,500	3,769,000	207×10^{-4}	-234×10^{-4}	27×10^{-4}	Loading primarily along wings
B	155,000	.275	-.014	2.93	5.50	3,380,000	563,550	3,899,050	198	-234	36	Do.
C	155,000	.333	-.014	2.93	5.50	3,380,000	433,500	3,769,000	207	-234	27	Do.
D	155,000	.391	-.014	2.93	5.50	3,380,000	433,500	3,769,000	207	-234	27	Do.
E	155,000	.200	-.014	2.93	5.50	3,380,000	433,500	3,769,000	207	-234	27	Do.
Model 4												
A	4,642	0.251	0.049	5.29	8.42	6,074	1,030	7,102	230×10^{-4}	-280×10^{-4}	50×10^{-4}	Loading primarily along wings
B	4,642	.383	.049	5.29	8.42	6,074	1,030	7,102	230	-280	50	Do.
C	4,642	.184	.049	5.29	8.42	6,074	1,030	7,102	230	-280	50	Do.
D	13,291	.268	.011	15.18	24.14	19,151	1,925	20,902	270	-297	27	Do.
E	9,000	.268	.011	10.29	16.36	9,590	1,520	11,120	189	-226	37	Do.
Model 5												
A	14,517	0.167	0.004	9.89	15.72	13,250	22,943	35,021	-144×10^{-4}	-179×10^{-4}	323×10^{-4}	Loading primarily along fuselage
B	14,485	.240	.003	9.87	15.68	13,338	23,618	35,994	-153	-184	337	Do.
C	14,485	.163	.003	9.87	15.68	13,338	17,449	29,825	-61	-184	245	Do.
Model 6												
A	6,815	0.199	0.035	16.59	23.36	3,910	2,749	6,534	76×10^{-4}	-249×10^{-4}	173×10^{-4}	Loading primarily along wings
B	6,260	.178	.038	15.23	24.21	3,050	2,694	5,616	25	-208	183	Do.
C	5,820	.159	.041	14.18	22.54	2,360	2,640	4,821	-22	-168	190	Loading primarily along fuselage
D	6,815	.199	.035	16.59	23.36	2,381	3,787	6,041	-92	-148	240	Do

NACA

TABLE II.- MASS CHARACTERISTICS OF MODELS TESTED - Concluded

Loading	Weight (lbs)	Center-of-gravity location		Relative airplane density, μ		Moments of inertia (slug-feet^2)			Mass parameters			Remarks
		$x/\bar{c}$	$z/\bar{c}$	Sea level	Test altitude	I_X	I_Y	I_Z	$\frac{I_X - I_Y}{mb^2}$	$\frac{I_Y - I_Z}{mb^2}$	$\frac{I_Z - I_X}{mb^2}$	
Model 7												
A	11,648	0.240	0.014	13.80	21.93	3,989	27,619	29,557	-754×10^{-4}	-62×10^{-4}	816×10^{-4}	Loading primarily along fuselage
B	11,598	.241	.002	18.10	28.79	4,713	27,078	30,560	-1192	-186	1378	Do.
Model 8												
A	3,846	0.140	-0.052	2.61	4.13	5,084	4,369	9,365	21×10^{-4}	-144×10^{-4}	123×10^{-4}	Loading primarily along wings
B	3,507	.120	-.035	2.38	3.79	4,789	4,275	9,096	16	-152	136	Do.
C	3,890	.140	-.052	2.65	4.20	4,060	4,369	8,340	-9	-115	124	Loading primarily along fuselage
D	4,004	.140	-.052	2.71	4.30	5,941	4,369	10,222	43	-161	118	Loading primarily along wings
E	3,846	.190	-.052	2.61	4.13	5,084	3,844	8,840	36	-144	108	Do.
F	3,846	.090	-.052	2.61	4.13	5,084	4,864	9,860	6	-144	138	Do.
G	7,886	.140	-.010	5.35	8.51	5,664	4,738	10,204	13	-77	64	Do.
H	7,547	.120	-.023	5.11	8.13	5,384	4,655	9,930	10	-77	67	Do.
I	7,886	.090	-.010	5.35	8.51	5,664	5,738	11,203	-1	-77	78	
Model 9												
A	4,615	0.225	0.006	6.05	8.19	8,090	4,915	12,780	405×10^{-4}	-1006×10^{-4}	601×10^{-4}	Loading primarily along wings
B	5,287	.225	.006	6.92	9.36	10,193	4,915	14,883	590	-1115	525	Do.
C	4,615	.225	.006	6.05	8.19	4,126	5,750	9,651	-208	-500	708	Loading primarily along fuselage
D	4,615	.250	.006	6.05	8.19	4,126	5,750	9,651	-208	-500	708	Do.
E	4,615	.200	.006	6.05	8.19	4,126	5,750	9,651	-208	-500	708	Do.
F	6,283	.225	.006	8.24	11.16	8,053	4,765	12,056	309	-686	377	Loading primarily along wings
G	6,947	.225	.006	9.09	12.30	10,122	4,765	14,243	456	-807	351	Do.
H	7,320	.225	.006	9.58	12.96	8,053	10,578	17,527	-204	-563	767	Loading primarily along fuselage
I	11,890	.218	.017	15.59	21.11	17,178	6,900	23,571	511	-803	281	Loading primarily along wings
Model 10												
A	16,850	0.263	0.005	22.1	35.1	18,296	15,367	33,703	103×10^{-4}	-646×10^{-4}	543×10^{-4}	Loading primarily along wings
Model 11												
A	3,241	0.120	0.182	6.07	8.22	1,409	4,062	5,041	-197×10^{-4}	-72×10^{-4}	269×10^{-4}	Loading primarily along fuselage
B	3,241	.120	.182	6.07	8.22	1,973	4,062	5,605	-155	-114	269	Do.
C	3,241	.120	.182	6.07	8.22	1,409	3,453	4,432	-151	-73	224	Do.
D	3,241	.120	.182	6.07	8.22	1,409	5,687	6,666	-317	-72	389	Do.
E	3,241	.220	.182	6.07	8.22	1,409	4,062	5,041	-197	-72	269	Do.
F	3,241	.070	.182	6.07	8.22	1,409	4,062	5,041	-197	-72	269	Do.
G	3,241	[a].08	.182	6.07	8.22	1,409	4,062	5,041	-197	-72	269	Do.
H	3,241	[a].37	.182	6.07	8.22	1,409	4,062	5,041	-197	-72	269	Do.
Model 12												
A	7,717	0.118	-0.019	11.52	15.61	4,120	10,896	14,712	-168×10^{-4}	-95×10^{-4}	263×10^{-4}	Loading primarily along fuselage
B	7,906	.099	-.008	11.80	15.99	6,592	11,916	17,184	-114	-116	230	Do.
C	7,851	.109	-.008	11.72	15.88	5,657	8,717	14,270	-68	-123	191	Do.
D	7,811	.048	-.012	11.66	15.80	5,063	12,672	17,718	-186	-124	310	Do.
E	7,835	.202	-.016	11.70	15.84	4,542	9,860	14,255	-130	-107	237	Do.

[a]Forward of leading edge of M.A.C.

NACA

TABLE III.- MODIFICATIONS TESTED ON MODELS

Modification	Modification made to				Effect on spin and recovery characteristics	Modification shown in figure	Data presented in chart
	Wing	Wing-tip rudders	Vertical fin	Other part			
Model 1							
A	----------	Split rudder	----------	----------	Detrimental	5(a)	1
Model 2							
A	----------	----------	----------	Equivalent propeller fin area added	Slightly detrimental	5(b)	2
B	20-percent semispan slats	----------	----------	----------	Detrimental	5(b)	2
C	35-percent semispan slats	----------	----------	----------	----------do----------	5(b)	2
D	----------	----------	Horizontal area	----------	Ineffective	5(b)	2
Model 4							
A	40-percent semispan slats	----------	----------	----------	Slightly detrimental	5(c)	4
B	25-percent semispan slats	----------	----------	----------	Ineffective	5(c)	4
C	60-percent semispan slats	----------	----------	----------	Detrimental	5(c)	4
D	25-percent semispan auxiliary airfoil	----------	----------	----------	Slightly detrimental	5(c)	4
E	25-percent semispan slats	----------	Vertical fins removed	----------	Detrimental	5(c)	4
F	25-percent semispan slats	Neutral	Surface made movable aft of 50-percent-chord line	----------	Beneficial	5(c)	4
G	25-percent semispan slats	Neutral	Surface made movable aft of 50-percent-chord line plus area A	----------	Very beneficial	5(c)	4
H	25-percent semispan slats	Neutral; Area B added to trailing edge of wing	Surface made movable aft of 50-percent-chord line	----------	Beneficial	5(c)	4
I	25-percent semispan slats	Area C added, doubling chord of rudders	----------	----------	Somewhat beneficial	5(c)	4
J	25-percent semispan slats	Area C added and hinge line moved to trailing edge of wing	----------	----------	Beneficial	5(c)	4
K	25-percent semispan slats	Area D added and hinge line moved to trailing edge of wing	----------	----------	Very beneficial	5(c)	4
L	Area F added	Neutral	Fins moved outboard, area E added, surface made movable aft of 50-percent-chord line	----------	Beneficial	5(c)	4
M	----------	Neutral	Fins moved outboard; area E added; area G used as rudders	----------	Beneficial	5(c)	Not presented
Model 5							
A	55.4-percent semispan slats	----------	----------	----------	Slightly detrimental	1(e)	5
Model 6							
A	----------	----------	Single vertical tail moved rearward 1.7 inches	----------	Ineffective for loading A, beneficial for loading D	5(d)	6
B	----------	----------	Dual vertical tails added with same tail volume as original single vertical tail	----------	Ineffective for loading A, ineffective for loading D	5(d)	6
C	----------	----------	Dual vertical tails moved rearward 1.0 inch to have same tail volume as mod. A	----------	Ineffective for loading A, beneficial for loading D	5(d)	6
Model 7							
A	Wing fillets added	----------	----------	----------	Detrimental	1(g)	7
B	----------	----------	Dual vertical tails	----------	Ineffective	1(g)	7
C	----------	----------	Large dual vertical tails	----------	Beneficial	5(e)	Not presented

NACA

TABLE III.- MODIFICATIONS TESTED ON MODELS - Concluded

Modification	Modification made to				Effect on spin and recovery characteristics	Modification shown in figure	Data presented in chart
	Wing	Wing-tip rudders	Vertical fin	Other part			
Model 8							
A	Spoilers	----------	----------	----------	Slightly beneficial	5(f)	8
B	Increase dihedral to 8°	----------	----------	----------	Ineffective	----------	8
C	----------	----------	Moved rearward	Large horizontal tail added	Beneficial in improving trim condition	5(f)	Not presented
Model 10							
A	----------	----------	Ventral fin 1	----------	Ineffective	5(g)	Not presented
B	----------	----------	Ventral fin 2	----------	----------do----------	5(g)	Do.
C	----------	----------	Vertical fin 1	----------	----------do----------	5(g)	Do.
D	----------	----------	Vertical fin 2	----------	----------do----------	5(g)	Do.
E	----------	----------	Vertical fin 3	----------	----------do----------	5(g)	Do.
F	----------	----------	Vertical fin 4	----------	----------do----------	5(g)	Do.
G	----------	----------	Vertical fin 5	----------	----------do----------	5(g)	Do.
H	----------	----------	Vertical fin 6	----------	----------do----------	5(g)	Do.
I	Spoiler 1	----------	Vertical fin 2	----------	----------do----------	5(g)	Do.
J	Spoiler 2	----------	----------	----------	----------do----------	5(g)	Do.
K	Spoiler 3	----------	----------	----------	----------do----------	5(g)	Do.
L	Longitudinal fence 1	----------	----------	----------	----------do----------	5(g)	Do.
M	Longitudinal fences 1 and 2	----------	----------	----------	----------do----------	5(g)	Do.
N	Longitudinal fences 1 and 2	----------	Vertical fin 5	----------	----------do----------	5(g)	Do.
O	Elevon spoilers	----------	Vertical fin 5	----------	----------do----------	5(g)	Do.
P	Slotted elevon; slats 1	----------	----------	----------	----------do----------	5(g)	Do.
Q	Slotted elevon; slats 2	----------	----------	----------	----------do----------	5(g)	Do.
R	----------	----------	Vertical fin 7; dorsal fin 1	----------	----------do----------	5(g)	Do.
S	----------	----------	Vertical fin 7; dorsal fin 2	----------	----------do----------	5(g)	Do.
T	----------	----------	----------	Supplementary tail 1	Very slightly beneficial	5(g)	Do.
U	Spoiler 5	----------	----------	----------	----------do----------	5(g)	Do.
V	Spoiler 6	----------	----------	----------	----------do----------	5(g)	Do.
W	Spoiler 7	----------	----------	----------	----------do----------	5(g)	Do.
X	Spoiler 7	----------	Vertical fin 2	----------	----------do----------	5(g)	Do.
Y	----------	----------	----------	Supplementary tail 2	Beneficial	5(g)	Do.
Z	Spoiler 4	----------	----------	----------	----------do----------	5(g)	Do.
A'	----------	----------	Vertical fin 7; rearward portion movable as rudder	----------	----------do----------	5(g)	Do.
Model 11							
A	Ailerons drooped 22°	----------	----------	----------	Ineffective	----------	11
B	Aileron chord and area double; ailerons drooped 22°	----------	----------	----------	Slightly beneficial in improving trim condition	----------	11
C	Fin A	----------	----------	----------	Ineffective	5(h)	11
D	Fin B	----------	----------	----------	Slightly beneficial in improving trim condition	5(h)	11
E	Spoilers	----------	----------	----------	Ineffective	5(h)	11
F	----------	Fins and rudder moved to wing tip	----------	----------	Ineffective	5(h)	11
G	----------	----------	----------	Fin C	Ineffective	5(h)	11
H	----------	----------	----------	Fin D	Ineffective	5(h)	11

NACA

CHART 1.- SPIN DATA OBTAINED WITH MODEL 1

[Unless otherwise indicated, steady-spin data are for rudder-with spins of the model in the clean condition and recoveries were attempted by rapid full rudder reversal; right erect spins]

	Loading A										
Ailerons	Against			Neutral					With		
Elevators	U	N	D	U	N (a)	N (a)	D (a)	D (a)	U	N	D (b)
α, deg	36		82	39	---		49		76	46	--
ϕ, deg	2D	No	0	4D	---	No	2D	No	0	3D	--
Ω, rps	0.40		0.92	0.40	---		0.54		0.70	0.55	--
V, fps	220	spin	133	224	173	spin	191	spin	162	205	--
Turns for recovery	$\frac{3}{4}$ $1\frac{1}{4}$		6	$1\frac{1}{4}$	$1\frac{1}{4}$		$2\frac{1}{2}$		4	$2\frac{3}{4}$ 2	

	Loading B										
Ailerons	Against			Neutral					With		
Elevators	U	N	D	U (a)	U (a)	N (a)	N (a)	D (c)	U	N	D (b)
α, deg			81	---		64		--	77	38	--
ϕ, deg	No	No	1D	---	No	1D	No	--	2D	8D	--
Ω, rps			0.89	0.41		0.61		--	0.72	0.51	--
V, fps	spin	spin	136	220	spin	165	spin	--	160	202	--
Turns for recovery			6	$1\frac{1}{4}$		2		--	5	1	--

	Loading C										
Ailerons	Against			Neutral					With		
Elevators	U (bc)	N	D	U	N (d)	N (bd)	D		U	N	D (c)
α, deg	---		79	50	67	---			76	51	--
ϕ, deg	---	No	0	1D	1U	---	No		0	5D	--
Ω, rps	---		0.76	0.35	0.56	---			0.64	0.40	--
V, fps	---	spin	140	215	165	---	spin		160	198	--
Turns for recovery	1		$1\frac{1}{2}$	$1\frac{1}{2}$	2				5	$1\frac{3}{4}$	

	Loading D									
Ailerons	Against			Neutral			With			
Elevators	U	N	D	U	N	D	U	N	D (c)	
α, deg			84	54			80	53	--	
ϕ, deg	No	No	1D	0	No	No	1D	5D	--	
Ω, rps			1.04	0.44			0.79	0.57	--	
V, fps	spin	spin	133	209	spin	spin	151	182	--	
Turns for recovery			---	---			---	---	--	

	Loading E									
Ailerons	Against			Neutral			With			
Elevators	U	N	D	U	N	D	U	N	D (c)	
α, deg		73	83	62	---	73	82	51	--	
ϕ, deg	10D	0	0	2D	---	0	1D	8D	--	
Ω, rps	0.54	0.72	1.00	0.57	---	0.71	0.89	0.47	--	
V, fps	231	162	133	202	180	173	162	187	--	
Turns for recovery	---	$5\frac{1}{2}$	---	$1\frac{1}{2}$	3	$>3\frac{3}{4}$	5	---	--	

	Loading F									
Ailerons	Against			Neutral			With			
Elevators	U (b)	N	D	U	N	D	U	N	D (b)	
α, deg	--	--	83	59	74	67	80	59	---	
ϕ, deg	--	--	1D	3D	1D	2D	2D	7D	---	
Ω, rps	--	--	0.84	0.34	0.64	0.56	0.72	0.45	---	
V, fps	--	--	122	182	153	162	153	178	---	
Turns for recovery	--	--	---	$2\frac{1}{2}$	3	---	---	---	---	

	Loading G									
Ailerons	Against			Neutral			With			
Elevons as Elevators	U	N	D	U	N	D	U	N	D (c)	
α, deg		65	80	38			75	49	--	
ϕ, deg	No	1U	1D	1D	No	No	1D	5D	--	
Ω, rps		0.64	0.88	0.39			0.74	0.49	--	
V, fps	spin	162	125	215	spin	spin	155	189	--	
Turns for recovery		---	---	---			---	---	--	

	Loading A, flaps down 60°									
Ailerons	Against			Neutral			With			
Elevons as Elevators	U	N	D	U (c)	N	D	U	N	D	
α, deg	--	--		--			75	---	--	
ϕ, deg	--	--	No	--	No	No	0	---	--	
Ω, rps	--	--		--			0.72	---	--	
V, fps	--	--	spin	--	spin	spin	158	---	--	
Turns for recovery	--	--		--			---	---	--	

	Loading A, landing gear extended									
Ailerons	Against			Neutral			With			
Elevons as Elevators	U	N	D	U	N	D	U	N	D (b)	
α, deg			79				78	-	--	
ϕ, deg	No	No	0	No	No	No	1D	-	--	
Ω, rps			0.77				0.72	-	--	
V, fps	spin	spin	147	spin	spin	spin	158	-	--	
Turns for recovery			---				---	-	--	

	Loading A, landing condition									
Ailerons	Against			Neutral			With			
Elevons as Elevators	U	N	D	U	N	D	U	N	D (b)	
α, deg								74	41	--
ϕ, deg	No	No	No	No	No	No	4D	6D	--	
Ω, rps							0.62	0.48	--	
V, fps	spin	spin	spin	spin	spin	spin	169	205	--	
Turns for recovery							$2\frac{1}{2}$	$1\frac{1}{2}$	--	

	Loading A - Modification A - right rudder 60°, left rudder 0°									
Ailerons	Against			Neutral				With		
Elevators	U	N	D	U (a)	U (a)	N	D	U	N	D
α, deg			---		69	65	71	78	67	
ϕ, deg	No	No	---	No	1U	1D	0	0	1D	No
Ω, rps			---		0.55	0.64	0.71	0.78	0.58	
V, fps	spin	spin	136	spin	184	162	162	158	162	spin
Turns for recovery			∞		e---	3	4	$5\frac{1}{2}$	e---	

	Loading H									
Ailerons	Against			Neutral			With			
Elevators	U	N	D	U (bf)	N (f)	D (f)	U	N (b)	D (b)	
α, deg		---	81	45	---	--	81	--	--	
ϕ, deg	No	---	0	6D	---	--	1D	--	--	
Ω, rps		---	0.56	0.24	---	--	0.55	--	--	
V, fps	spin	173	134	200	---	--	158	--	--	
Turns for recovery		3 $5\frac{1}{2}$	∞	---	$>2\frac{1}{2}$	--	$5\frac{1}{2}$ $2\frac{1}{5}$	--	--	

	Loading H, rudder-neutral spins									
Ailerons	Against			Neutral			With			
Elevators	U	N	D	U	N	D (c)	U	N (c)	D (c)	
α, deg		---	67			---	71	---	--	
ϕ, deg	No	---	1D	No	No	---	4U	---	--	
Ω, rps		---	0.47			---	0.43	---	--	
V, fps	spin	218	172	spin	spin	---	184	---	--	
Turns for recovery		---	---			---	---	---	--	

[a]Two conditions possible.
[b]Model oscillatory in pitch.
[c]Steep spin, high rate of descent.
[d]Two types of spin.
[e]Model went into steep rapid spin after rudder reversal.
[f]Wandering spin.

CHART 2.- SPIN DATA OBTAINED WITH MODEL 2

[Unless otherwise indicated, steady-spin data are for rudder-with spins of the model in clean condition and recoveries were attempted by rapid full rudder reversal; right erect spins]

	Loading A															Loading A rudder controls neutral								
Ailerons	Against					Neutral				With						Against			Neutral			With		
	Full				1/2					1/2	Full													
Elevators	U (a)(b)	U (b)	N	D	N	U (c)	N (b)(c)	N (b)(c)	1/2D	D	N (c)	U (b)(c)	U (b)(c)	N (c)	D (c)	U	N	D	U	N	D	U (c)	N (c)	D (g)(h)
α, deg	--	--	No	No	No	44,37	34,21	27,20	No	No	33,26	38	49,41	39,32	32	No	No	No	No	--	No	32,22	35,25	--
ϕ, deg	--	--	s	s	s	3U,4D	2U,1D	3U,2D	s	s	1U,2D	2U,2D	1U,2D	1U,1D	2U,1D	s	s	s	s	--	s	3U,4D	3U,2D	--
Ω, rps	--	0.21	p	p	p	0.21	0.37	0.38	p	p	0.37	0.31	0.34	0.35	0.39	p	p	p	p	--	p	0.23	0.40	--
V, fps	--	213	in	in	in	188	220	204	in	in	201	176	163	179	188	in	in	in	in	--	in	213	204	--
Turns for recovery		d_2				$\frac{1}{2},\frac{1}{2}$	2	∞			∞	∞	$2\frac{1}{2},2\frac{1}{2}$	∞	∞									
		$e_{\frac{1}{4}},e_{\frac{1}{2}}$				$f_{\frac{1}{4}},f_{\frac{1}{4}}$	$f\ 2\frac{1}{2}$						$df_{>3\frac{1}{2}}$	f_∞	f_∞									
						$e_{\frac{1}{4}},e_1$							e_∞											

	Loading A rudder controls against the spin										Loading B										Loading C								
Ailerons	Against			Neutral				With				Against			Neutral			With				Against			Neutral			With		
Elevators	U	N	D	U	N (b)	N (b)(g)	D	U (b)	U (b)	N	D (g)	U (c)	N (1)	D	U	N (c)	D (b)	D (b)(c)	U (b)(c)	U (b)(c)	N (c)	D (c)	U (c)	N	D	U (c)	N (c)	D	U (c)	N (c)	D (c)
α, deg	No	No	No	No	No	--	No	≈30	20,31	-		41,33	-	No	-	42,20	No	53,22	56,47	60	49,36	56,32	37,26	No	No	53,39	37,15	No	55,47	47,30	43,22
ϕ, deg						--		--	2U,3D	-		1U,4D	-		-	3U,2D		7U,3D	1U,4D	1U,2D	1U,1D	2U,1D	3U,1D			2U,3D	4U,2D		3U,2D	2U,3D	2U,2D
Ω, rps	sp	sp	sp	sp	sp	--	sp	--	--	-		0.22	-	sp	-	0.36	sp	0.42	0.33	0.25	0.35	0.37	0.24	sp	sp	0.24	0.40	sp	0.35	0.38	0.43
V, fps	in	in	in	in	in	--	in	--	--	-		206	-	in	188	200	in	188	163	180	173	182	216	in	in	179	201	in	163	176	185
Turns for recovery												$\frac{1}{2},1$			$\frac{1}{4},\frac{1}{4}$	>5		>6	$2,2\frac{1}{4}$	>3	∞	∞	1 3/4 1 1/2			$\frac{1}{2}\ \frac{3}{4}$	>9		∞	∞	>7

	Loading D									Loading E									Loading F								
Ailerons	Against			Neutral			With			Against			Neutral			With			Against				Neutral			With		
Elevators	U (c)	N	D	U (c)	N (c)	D	U (c)	N (c)	D (c)	U (c)	N	D	U (c)	N	D	U (c)	N (c)	D	U (c)	N (c)	D (b)	D (bc)	U (j)	N (c)	D (c)	U (c)	N (c)	D (c)
α, deg	44,36	No	No	51,41	43,35	-	53,45	50,38	46,37	38,23	No	No	41,17	No	No	51,40	43,27	No	34	36,27	No	43,22	No	46,40	45,21	63,51	56,41	49,35
ϕ, deg	3U,3D			7U,5D	2U,1D	-	1U,3D	3U,4D	1U,2D	7U,1D			7U1D			4U,0	3U,1D		3U8D	4U,4D		7U1D		2U,3D	3U,1D	4U,4D	2U,4D	0,3D
Ω, rps	0.20	sp	sp	0.22	0.28	0.35	0.29	0.32	0.32	0.44	sp	sp	-	sp	sp	0.39	0.51	sp	0.13	0.15	sp	-	sp	0.28	0.32	0.29	0.31	0.31
V, fps	191	in	in	176	194	201	160	176	188	213	in	in	216	in	in	185	182	in	188	201	in	207 176	in	185	185	160	166	182
Turns for recovery	$\frac{1}{2},\frac{1}{2}$			$\frac{1}{4},\frac{1}{2}$	$4\frac{1}{2}$	2	1 3/4 2 1/2	∞	∞	∞			>7			∞	∞		$\frac{1}{4}$	$\frac{1}{4},\frac{1}{4}$		$\frac{1}{2},1$		$\frac{3}{4},1$	$2\frac{1}{2}$ 3	2 $2\frac{3}{4}$	∞	∞

	Loading G									Loading H									Loading A - Modification A								
Ailerons	Against			Neutral			With			Against			Neutral			With			Against			Neutral			With		
Elevators	U (a)	N (c)	D (c)	U (j)	N (c)	D (c)	U (c)	N (c)	D (c)	U (c)	N	D	U (c)	N (c)	D	U (c)	N (c)	D (c)	U (c)	N	D	U (c)	N (c)	D (c)	U (c)	N (c)	D (c)
α, deg	-	54,40	52,43	No	55,41	51,44	63,53	53,42	54,40	36,22	No	No	43,33	38,16	No	49,41	43,35	40,24	38,31	No	No	49,30	41,23	44,15	59,48	47,38	40,30
ϕ, deg	-	6U,8D	3U,1D		3U,7D	4U,4D	7U,6D	1U,7D	2U,8D	3U,1D			2U	2U		1U	1U,2D	2U,2D	2D			12U6D	1U2D	8U 7D	2U,3D	1D	1D
Ω, rps	-	0.19	0.24	sp	0.23	0.26	0.26	0.27	0.27	0.33	sp	sp	0.27		sp	0.35	0.39	0.45	0.18	sp	sp	0.21	0.33	0.43	0.32	0.33	0.35
V, fps	-	166	166	in	170	166	150	157	163	209	in	in	197	-	in	176	195	195	201	in	in	188	201	207	163	176	185
Turns for recovery		$\frac{1}{4},\frac{1}{2}$	$\frac{1}{2},\frac{1}{2}$		$\frac{3}{4},1$	$\frac{3}{4},\frac{3}{4}$	$1,1\frac{1}{4}$	$1,1\frac{1}{4}$	1,1	>5			d,>4			∞	∞	∞	$\frac{1}{2},\frac{1}{2}$			$\frac{1}{2}$	d,>6	$1\frac{1}{2},3$	$2\frac{1}{4},3$	∞	∞

	Loading A - Modification B									Loading A - Modification C									Loading A - Modification D								
Ailerons	Against			Neutral			With			Against			Neutral			With			Against			Neutral			With		
Elevators	U (c)	N (g)	D	U (c)	N (c)	D	U (c)	N (c)	D	U (c)	N (c)	D	U (c)	N (c)	D (c)	U (c)	N (c)	D	U (c)	D		U (c)	N (c)	D	U (c)	N (c)	D (c)
α, deg	36		No	48,41	34	No	48	55,41	35	38	34	No	44	38	47,37	49,42	48,38	38	46,23	No		49,34	38,21	No	42,30	49,31	40,26
ϕ, deg	3U,1D			1U	2U,2D		2U,1D	3U,1D	1U	3U,1D	3U,4D		1U,3D	1U,2D	3U,2D	2U,2D	1U,1D	2U	6U,2D			4U,2D	7U,3D		5U,2D	1U	5U,1D
Ω, rps	0.31		sp	0.33	0.41	sp	0.41	0.44	0.44	0.31	-	sp	0.31	0.41	0.44	0.42	0.43	0.45	0.32	sp		0.22	0.43	sp	0.30	0.38	0.44
V, fps	184		in	161	157	in	151	157	163	174	213	in	164	170	170	146	151	154	220	in		207	207	in	220	192	188
Turns for recovery	∞			2 1/4 2 3/4	d>4		∞	∞	∞	∞	$3\frac{1}{2}$		∞	∞	$2\frac{1}{2}$	∞	∞	∞	1			$1,\frac{1}{2}$	7		$2\frac{1}{2},3$	∞	∞

[a]Radius of spin too great to permit testing completely.
[b]Two types of spin.
[c]Oscillatory spin; range of values or average value given.
[d]Visual estimate.
[e]Recovery attempted by movement of elevators to down.
[f]Recovery attempted by neutralization of rudder controls.
[g]Oscillatory in pitch.
[h]Wandering spin.
[i]Steep, wandering and oscillatory spin.
[j]Violently oscillatory in pitch. Amplitude of oscillation increased until model pitched inverted and then stopped spinning.

NACA

CHART 3.- SPIN DATA OBTAINED WITH MODEL 3

[Unless otherwise indicated, steady-spin data are for rudder-with spins of the model in the clean condition and recoveries were attempted by rapid full rudder reversal; right erect spins]

	Loading A, rudders against spin									Loading A, rudder neutral spins									Loading A								
Ailerons	Against			Neutral			With			Against			Neutral			With			Against			Neutral			With		
Elevators	U (ab)	N	D	U (ab)	N (ac)	D	U (d)	N	D	U	N	D	U	N (g)	D (bd)	U	N	D (bd)	U	N	D	U	N	D	U	N (dg)	D
α, deg	---			---	---	---	36	26	25					---	----	44	32	28							44	---	
ϕ, deg	---	N o	N o	---	---	---	3U	3U	5U	N o	N o	N o	N o	---	----	0	0	1D	N o	N o	N o	N o	N o	N o	2D	---	N o
Ω, rps	---			---	---	---	0.10	0.21	0.21					---	----	0.18	0.21	0.24							0.20	---	
V, fps	377	s p i n	s p i n	366	---	350	319	350	361	s p i n	s p i n	s p i n	s p i n	---	>350	319	350	383	s p i n	s p i n	s p i n	s p i n	s p i n	s p i n	298	---	s p i n
Turns for recovery	---			---	---	---	e_∞	ef_1	$ef\frac{1}{2}$					---		h_∞ e_∞	th >8 ef >8	e $2\frac{1}{2}$							h_∞	---	

	Loading A, slots open, rudders against spin									Loading A, slots open									Loading B, rudders against spin									Loading B								
Ailerons	Against			Neutral			With			Against			Neutral			With			Against			Neutral			With			Against			Neutral			With		
Elevators	U	N	D	U (a)	N	D	U	N (i)	D (i)	U	N	D	U	N	D	U	N (i)	D	U	N	D	U (a)	N (i)	D	U	N	D	U	N	D	U (a)	N (i)	D	U	N (i)	D (i)
α, deg				29			44	30	26							57	---					---	---		38	33	25				---	---		41	29	25
ϕ, deg	N o	N o	N o	11D	N o	N o	4D	4D	5D	N o	N o	N o	N o	N o	N o	1U	---	N o	N o	N o	N o	---	---	N o	5D	8D	7D	N o	N o	N o	---	---	N o	3D	1U	1U
Ω, rps				0.11			0.22	0.24	0.23							0.26						---	---		0.15	0.19	0.13				---	---		0.22	0.15	0.24
V, fps	s p i n	s p i n	s p i n	377	s p i n	s p i n	318	329	350	s p i n	s p i n	s p i n	s p i n	s p i n	s p i n	377	---	s p i n	s p i n	s p i n	s p i n	---	---	s p i n	320	350	350	s p i n	s p i n	s p i n	383	---	s p i n	266	372	378
Turns for recovery				---			---	---	---							∞	---					---	---		---	---	---				$f_{>4}$	---		∞	$f_{>4\frac{1}{2}}$	f >8

	Loading C rudders against spin									Loading C									Loading D rudders against spin									Loading D								
Ailerons	Against			Neutral			With			Against			Neutral			With			Against			Neutral			With			Against			Neutral			With		
Elevators	U	N	D	U	N	D	U	N	D	U	N	D	U (j)	N	D (j)	U	N	D	U	N	D	U	N	D	U	N	D	U	N (i)	D	U	N	D	U	N	D
α, deg							47	36	34				53	34	25	64	49	35											56		71	66		74	73	60
ϕ, deg	N o	N o	N o	N o	N o	N o	6D	8D	7D	N o	N o	N o	1D	1D	1U	1U	1D	2D	N o	N o	N o	N o	N o	N o	N o	N o	N o	N o	3D	N o	2D	0	N o	1D	1D	1D
Ω, rps							0.13	0.12	0.15				0.13	0.12	0.18	0.23	0.18	0.15											0.17		0.21	0.19		0.23	0.21	0.19
V, fps	s p i n	s p i n	s p i n	s p i n	s p i n	s p i n	298	320	320	s p i n	s p i n	s p i n	288	329	298	253	282	329	s p i n	s p i n	s p i n	s p i n	s p i n	s p i n	s p i n	s p i n	s p i n	s p i n	255	s p i n	234	249	s p i n	239	234	244
Turns for recovery							---	---	---				1 1	$2\frac{1}{2}$ 4	$7\frac{1}{2}$	∞	∞	∞											f_1 r_3		c_2	$2\frac{1}{4}$ 3		4 4	3 3	1 3/4 2

	Loading E rudders against spin									Loading E									Loading A, pitch flap deflected down 15°, rudders against spin									Loading A, pitch flap deflected down 15°								
Ailerons	Against			Neutral			With			Against			Neutral			With			Against			Neutral			With			Against			Neutral			With		
Elevators	U (g)	N	D	U (g)	N	D	U (g)	N	D	U	N	D	U (g)	N	D	U (g)	N	D	U	N	D	U	N	D	U (d)	N	D	U	N	D	U	N	D	U	N (d)	D
α, deg	---			---			---						---			---									---	25								57	28	
ϕ, deg	---	N o	N o	---	N o	N o	---	N o	N o	N o	N o	N o	---	N o	N o	---	N o	N o	N o	N o	N o	N o	N o	N o	---	4D	N o	N o	N o	N o	N o	N o	N o	1U	1U	N o
Ω, rps	---			---			---						---			---									---	0.26								0.25	---	
V, fps	---	s p i n	s p i n	---	s p i n	s p i n	---	s p i n	s p i n	s p i n	s p i n	s p i n	---	s p i n	s p i n	---	s p i n	s p i n	s p i n	s p i n	s p i n	s p i n	s p i n	s p i n	---	360	s p i n	s p i n	s p i n	s p i n	s p i n	s p i n	s p i n	255	---	s p i n
Turns for recovery	---			---			---			---			---			---									---	----								∞	f >8	

[a]Large radius oscillatory spin, average values given.
[b]Wandering spin
[c]Steep wandering spin.
[d]Oscillatory in pitch.
[e]Recovery attempted by moving rudder to full with the spin.
[f]Visual observation.
[g]Steep spin.
[h]Recovery attempted by moving rudder to full against the spin.
[i]Oscillatory spin.
[j]Occasionally oscillated out of spin.

NACA

CHART 3.- SPIN DATA OBTAINED WITH MODEL 3-CONCLUDED

	Loading A, landing condition, rudders against spin								
Ailerons	Against			Neutral			With		
Elevators	U	N (1)	D (1)	U	N (1)	D (1)	U	N	D
α, deg	27	---	35	31	22	26	47	28	33
ϕ, deg	8D	---	6D	4D	6D	4D	3D	4D	2D
Ω, rps	0.13	---	0.16	0.15	0.17	0.18	0.21	0.20	0.21
V, fps	350	383	340	320	360	308	276	320	329
Turns for recovery	----	---	----	----	----	----	----	----	----

	Loading A, landing condition								
Ailerons	Against			Neutral			With		
Elevators	U	N	D	U	N	D	U (1)	N	D
α, deg	No spin			No spin			--	No spin	
ϕ, deg							--		
Ω, rps							--		
V, fps							--		
Turns for recovery							--		

	Loading A, landing condition, slots closed, rudders against spin								
Ailerons	Against			Neutral			With		
Elevators	U	N (1)	D	U	N	D	U	N	D
α, deg	26	---	33	30	29	29	40	35	30
ϕ, deg	3U	---	2U	3U	3U	2U	2U	4U	4U
Ω, rps	0.14	---	0.19	0.16	0.20	0.21	0.20	0.21	0.22
V, fps	319	---	324	303	319	319	276	298	308
Turns for recovery	----	---	----	----	----	----	----	----	----

	Loading A, landing condition, slots closed								
Ailerons	Against			Neutral			With		
Elevators	U (k)	N	D	U	N	D	U	N (1)	D (a)
α, deg	----	No spin		No spin			30	----	----
ϕ, deg	----						1U	----	----
Ω, rps	----						0.15	----	----
V, fps	----						340	340	----
Turns for recovery	----						∞	∞	----

[a]Large radius oscillatory spin, average values given.

[1]Oscillatory spin.

[k]Increasing radius – may not spin.

CHART 4.- SPIN DATA OBTAINED WITH MODEL 4

[Unless otherwise indicated, the steady-spin data are for rudder-with spins of the model in the clean condition with split trailing-edge rudders installed and revised elevon deflections and recoveries were attempted by rapid full rudder reversal, right erect spins.]

	Loading A, circular-arc type rudders installed, original elevon deflections																				
Rudder	With												Neutral								
Ailerons	Against				Neutral			With					Against			Neutral			With		
	Full			1/2				1/2	Full												
Elevators	U	N	D	1/2 U	U (a)	N	D	1/2 U	U	1/2 U	N (b)	D	U	N	D	U	N	D	U (b)	N	D
α, deg	N o	N o	N o	N o		N o	N o	37	34	33	34	N o	N o	N o	N o	S t e e p s	N o	N o	25	N o	N o
ϕ, deg								1U	2U	1U	2U								0		
Ω, rps	s p i n	s p i n	s p i n	s p i n		s p i n	s p i n			0.67		s p i n	s p i n	s p i n	s p i n		s p i n	s p i n	0.69	s p i n	s p i n
V, fps					>190			196	182	194	180								214		
Turns for recovery	$c_{4\frac{1}{2}}$	$c_{3\frac{1}{2}}$	$cd_{4\frac{1}{2}}$	$c_{7\frac{1}{2}}$		c_7	cd_4		∞			cd_4	c_7	c_5	cd_4	p i n	c_5	cd_4		c_{10}	cd_8

	Loading A, circular-arc type rudders installed, original elevon deflections									Loading A, circular-arc type rudders installed, original elevon deflections, modification A													
Rudder	Against									With									Against				
Ailerons	Against			Neutral			With			Against			Neutral			With			Neutral		With		
Elevators	U	N	D	U (a)	N	D	U (b)	N	D	U	N	D	U	N	D	U (e)	N	D	U (a)	N	U (e)	N	D
α, deg	N o	N o	N o		N o	N o	30	N o	N o	N o	N o	N o	42	45	N o	51	46	N o		N o	33	N o	N o
ϕ, deg							1D						2U	1U		0	0				1D		
Ω, rps	s p i n	s p i n	s p i n		s p i n	s p i n	0.74	s p i n	s p i n	s p i n	s p i n	s p i n	0.63	0.62	s p i n	0.64	0.61	s p i n		s p i n	0.62	s p i n	s p i n
V, fps				>249			208						171	166		158	160		231		196		
Turns for recovery	c_4	c_3	$cd_{3\frac{1}{2}}$		c_5	cd_5		c_{12}	$cd_{4\frac{1}{2}}$	c_{10}	c_{12}	cd_{15}	> 6	$1\frac{1}{2}$ - $1\frac{3}{4}$	cd_{11}	$9\frac{1}{2}$	3 3	cd_{14}		c_7		c_6	cd_6

	Loading A																	
Rudder	With									Against								
Ailerons	Against			Neutral			With			Against			Neutral			With		
Elevators	U	N	D	U	N	D	U	N	D	U (b)	N	D	U (b)	N	D	U (b)	N	D
α, deg	N o	N o	N o	N o	N o	N o	N o	N o	N o	20	N o	N o	26	N o	N o	31	N o	N o
ϕ, deg										3D			3D			2D		
Ω, rps	s p i n	s p i n	s p i n	s p i n	s p i n	s p i n	s p i n	s p i n	s p i n	0.53	s p i n	s p i n	0.45	s p i n	s p i n	0.51	s p i n	s p i n
V, fps										208			199			199		
Turns for recovery	$c_{5\frac{1}{2}}$	c_7	cd_{11}	c_8	c_{10}	cd_7	c_{18}	c_{11}	cd_6		c_8	cd_6		c_7	cd_5		c_{16}	cd_8

	Loading A, modification B																	
Rudder	With									Against								
Ailerons	Against			Neutral			With			Against			Neutral			With		
Elevators	U	N	D	U	N	D	U	N	D	U	N	D	U	N	D	U	N	D
α, deg	N o	N o	N o	N o	N o	N o	60	N o	N o	N o	N o	N o	N o	N o	N o	29	N o	N o
ϕ, deg							1U									2D		
Ω, rps	s p i n	s p i n	s p i n	s p i n	s p i n	s p i n	0.56	s p i n	s p i n	s p i n	s p i n	s p i n	s p i n	s p i n	s p i n	0.52	s p i n	s p i n
V, fps							163									182		
Turns for recovery	c_{11}	c_{11}	cd_8	c_{10}	$c_{7\frac{1}{2}}$	cd_7	>7	c_{13}	cd_{10}	c_9	c_5	cd_4	c_7	c_8	$cd_{4\frac{1}{2}}$		c_{10}	cd_6

[a]Large radius spin; model may eventually recover.
[b]Wandering spin; slightly oscillatory in pitch.
[c]Number of turns required for model to stop spinning after being launched with initial spin rotation.
[d]After recovery, model goes inverted.
[e]Oscillatory in pitch.

NACA

CHART 4.- SPIN DATA OBTAINED WITH MODEL 4-CONTINUED

Loading A, modification C

Rudder	With									Against								
Ailerons	Against			Neutral			With			Against			Neutral			With		
Elevators	U	N	D	U (f)	N	D	U (f)	N (f)	D	U (eg)	N	D	U (eg)	N (eg)	D	U (eg)	N (eg)	D
α, deg	No spin	No spin	No spin	33	No spin	No spin	37	45	No spin	36	No spin	No spin	36	No spin	No spin	39	39	No spin
ϕ, deg				2U			2U	2U		1D			3D			2D	1D	
Ω, rps				0.43			0.46	0.42		0.62			0.50			0.52	0.65	
V, fps				188			180	158		180			176			180	163	
Turns for recovery	c_9	c_7	cd_6	∞	c_{12}	cd_{12}	∞	∞	cd_7		c_8	cd_6		c_7	cd_6			cd_8

Loading A, modification D

Rudder	With									Against								
Ailerons	Against			Neutral			With			Against			Neutral			With		
Elevators	U	N	D	U	N	D	U (eg)	N	D	U	N	D	U	N	D	U	N (eg)	D
α, deg	No spin	No spin	No spin	No spin	No spin	No spin	35 50	No spin	No spin	Stee p spin	No spin	No spin	Stee p spin	No spin	No spin	Stee p spin	28	No spin
ϕ, deg							2U										1D	
Ω, rps							0.53										0.70	
V, fps							176										260	
Turns for recovery	c_{12}	c_{18}	cd_{18}	c_{15}	c_7	cd_{15}	∞	c_{15}	cd_{10}		c_7	cd_{10}		c_8	cd_{10}			cd_{12}

	Loading B, circular-arc type rudders installed, original elevon deflections									Loading C, circular-arc type rudders installed, original elevon deflections								
Rudder	With									With								
Ailerons	Against			Neutral			With			Against			Neutral			With		
Elevators	U (hi)	N	D	U (i)	N	D	U (i)	N (i)	D (i)	U	N	D	U	N	D	U	N	D
α, deg	38	No spin	No spin	47	43	No spin	52	47	39	No spin	No spin	No spin	No spin	No spin	No spin	No spin	No spin	No spin
ϕ, deg	8U 7D			9U 6D	0		3U 5D	5U 6D	3U 4D									
Ω, rps	0.23			0.41	0.45		0.45	0.46	0.45									
V, fps	197			185	185		177	174	191									
Turns for recovery	$j\frac{1}{4}$ $j\frac{1}{4}$	c_{15}	c_{17}	$1\frac{1}{4}$ $1\frac{1}{4}$	>6	c_{11}	>10	>9	∞	c_4	$c_{4\frac{1}{2}}$	c_5	c_8	c_7	cd_4	c_{30}	c_5	cd_4

Loading A, modification E

Rudder	With								Against								
Ailerons	Against		Neutral			With			Against			Neutral			With		
Elevators	U	N	U (g)	N	D	U	N (g)	D (k)	U	N	D	U (eg)	N	D	U (e)	N (e)	D
α, deg	No spin	No spin	68	No spin	No spin	50	59	70	Stee p spin	No spin	No spin	35	No spin	No spin	46	35	No spin
ϕ, deg			1U			2U	1U	1U				3D			1U	3D	
Ω, rps			0.76			0.53	0.76	0.86				0.67			0.63	0.69	
V, fps			155			176	126	123				202			185	185	
Turns for recovery	c_{20}	c_{30}	∞	c_{22}	c_{15}	∞	∞	d_7 d_8		c_{13}	c_{12}		c_{13}	c_{10}			cd_{10}

[c]Number of turns required for model to stop spinning after being launched with initial spin rotation.
[d]After recovery, model goes inverted.
[e]Oscillatory in pitch.
[f]Wandering and oscillatory in pitch.
[g]Wandering spin.
[h]Large radius spin, model may eventually recover.
[i]Wandering spin; slightly oscillatory in pitch and roll; range of values given.
[j]Visual estimate.
[k]Oscillatory in roll.

CHART 4.- SPIN DATA OBTAINED WITH MODEL 4-CONTINUED

	Loading D, modification B																	
Rudder	With									Against								
Ailerons	Against			Neutral			With			Against			Neutral			With		
Elevators	U (l)	N (lm)	D (lm)	U (l)	N (lm)	D (lm)	U (l)	N (lm)	D (lm)	U	N	D	U	N	D	U (p)	N (p)	D
α, deg	73	56 95	66 90	75	69 83	58 78	58	60 76	56 81	No spin	Steep spin	No spin	Steep spin	Steep spin	Steep spin			Steep spin
ϕ, deg	1U	11U 11D	5U 4D	0	0	6U 6D	2U	0	7U 5D									
Ω, rps	0.91	1.16	1.14	0.96	0.98	0.92	0.71	0.95	0.91									
V, fps	246	231	231	246	231	234	263	252	240							297	278	
Turns for recovery		8 > 10	8 14	>13 n ∞ o >8	>15	6 11	>15	>7	>6	c_{14}	in q_{16}	c_{13}	in q_{16}	in q_{12}	in			in q_{17}

	Loading D, modification D													Loading D, modification F								
Rudder	With									Against				30° With								
Ailerons	Against			Neutral			With			Against		Neutral	With	Against			Neutral			With		
Elevators	U	N	D	U	N	D	U	N	D	U	N	U	U	U	N	D	U (p)	N	D	U (p)	N	D
α, deg	No spin	No spin	No spin	Steep spin	Steep spin	No spin	Steep spin	Steep spin	No spin	Steep spin	Steep spin	Steep spin	Steep spin	No spin	No spin	No spin		Steep spin	No spin			Steep spin
ϕ, deg																						
Ω, rps																						
V, fps																	328			272	341	
Turns for recovery	c_{23}	c_{25}	c_{30}	Pin q_{27}	Pin q_{30}	c_{20}	Pin	Pin q_{20}	c_{23}	Pin q_{30}	Pin q_{30}	Pin q_{26}	Pin q_{30}	c_{18}	c_{18}	dk_{15}		Pin q_{15}	dk_{20}	$>6\frac{1}{2}$		Pin q_{15}

	Loading D, modification F									Loading D, modification G																	
Rudder	Against									30° With									30° Against								
Ailerons	Against			Neutral			With			Against			Neutral			With			Against			Neutral			With		
Elevators	U	N	D	U	N	D	U	N	D	U	N	D	U	N	D	U (p)	N	D	U	N	D	U	N	D	U (p)	N	D
α, deg	No spin	No spin	No spin	Steep spin	Steep spin	No spin	Steep spin	Steep spin	No spin	No spin	No spin	No spin	Steep spin	No spin	No spin			Steep spin	No spin	No spin	No spin	Steep spin	Steep spin	No spin		Steep spin	No spin
ϕ, deg																											
Ω, rps																											
V, fps																354	309								341		
Turns for recovery	c_{14}	c_{15}	dk_{10}	Pin q_{13}	Pin q_{12}	cd_{10}	Pin q_{15}	Pin q_{15}	cd_{12}	c_{11}	c_8	cd_{12}	q_{15} dor 1 1/4 dor 2 1/2	c_{10}	cd_{15}			q_{19}	c_9	c_8	cd_8		q_{12}	cd_{12}		q_{15}	cd_8

	Loading D, modification H																					Loading D, modification I									
Rudder	With									Against												With						Against			
Ailerons	Against			Neutral			With			Against			Neutral			With						Neutral		With			Neutral	With		
Elevators	U	N	D	U	N	D	U (p)	N	D	U	N	D	U	N	D	U (p)	N (p)	D				U	N	U	N	D	U	U (s)	N	D
α, deg	No spin	No spin	No spin	Steep spin	Steep spin	No spin		Steep spin	Steep spin	No spin	No spin	No spin	Steep spin	Steep spin	No spin	40		Steep spin				No spin	No spin	Steep spin	No spin	No spin	Steep spin		Steep spin	No spin
ϕ, deg																0														
Ω, rps																0.69														
V, fps							288									306	App. 335											385		
Turns for recovery	c_{14}	c_{12}	c_{17}	q_{15}	q_{20}	c_{20}			q_{15}	c_{14}	$c_{10} \cdot c_{10}$			q_{14}	c_8			q_{18}	c_{20}	c_{18}		c_{25}	c_{30}	q_{14}			c_8

[c]Number of turns required for model to stop spinning after being launched with initial spin rotation.

[d]After recovery, model goes inverted.

[l]Flat and wandering spin.

[m]Oscillatory spin; range of values given.

[n]Recovery attempted by elevon reversal, stick moved from full back to full left and forward.

[o]Recovery attempted by simultaneous rudder and elevon reversal; stick moved from full back to full left and forward.

[p]Steep, wandering spin.

[q]Number of turns before model strikes safety net.

[r]Recovery attempted before model reached final steep attitude.

[s]Steep spin.

NACA

CHART 4.- SPIN DATA OBTAINED WITH MODEL 4-CONCLUDED

	Loading D, modification J											Loading D, modification K							
Rudder	With				Against							With			Against				
Ailerons	Neutral	With			Neutral		With			Neutral		With			Neutral			With	
Elevators	U	U	N	D	U (s)	N	U (s)	N	D	N	D	U	N	D	U (m)	N	D	U	D
α, deg	No spin		No spin	No spin		No spin		Steep spin	No spin	No spin	No spin	No spin	No spin	No spin		No spin	No spin	Steep spin	No spin
ϕ, deg																			
Ω, rps																			
V, fps		249			315		315								297				
Turns for recovery	$^{c}30$		$^{c}30$	$^{cd}20$		$^{cd}15$			$^{cd}12$	$^{c}12$	$^{cd}10$	$^{c}20$	$^{c}20$	$^{cd}10$		$^{c}14$	$^{cd}10$		$^{cd}10$

	Loading D, wing-tip rudders neutral, modification L														Loading D, landing condition, modification B								
Rudder	30° With							30° Against							With								
Ailerons	Against		Neutral			With		Against		Neutral			With		Against			Neutral			With		
Elevators	N	D	U (t)	N	D	N (e)	D (t)	N	D	U (t)	N (t)	D	N (e)	D (t)	U	N	D	U	N	D	U (g)	N (eg)	D
α, deg	No spin	No spin	Steep spin	Steep spin	No spin	37,66	Steep spin	No spin	No spin	Steep spin	Steep spin	No spin	39	Steep spin	Steep spin	74	74	Steep spin	59	No spin	58	60	No spin
ϕ, deg						1U							1U			1U	1D		1D		2D	1D	
Ω, rps						0.61							0.65			1.08	1.05		0.74		0.68	0.79	
V, fps						282							348			234	234		240		263	252	
Turns for recovery	$^{c}18$	$^{c}19$	$^{q}21$	$^{q}24$	$^{cq}26$		$^{q}26$	$^{c}13$	$^{cq}15$	$^{q}18$	$^{q}19$	$^{cd}16$		$^{q}20$	$^{q}30$			$^{q}40$		$^{dq}70$			$^{cd}38$

	Loading D, landing condition, modification B									Loading E, modification B																
Rudder	Against									With								Against								
Ailerons	Against			Neutral			With			Against			Neutral			With		Against			Neutral			With		
Elevators	U	N	D	U	N	D	U (g)	N (eg)	D	U	N	D	U	N	D	U	D (e)	U	N	D	U	N	D	U (ep)	N (p)	D (p)
α, deg	No spin	No spin	No spin	Steep spin	Steep spin	No spin			Steep spin	No spin	No spin	No spin	No spin	No spin	No spin	62	45,75	No spin	No spin	No spin	No spin	No spin	No spin	22,45		
ϕ, deg																2U	11D7U							2D		
Ω, rps																0.76	0.79							0.60		
V, fps							341	351								202	208							254	263	247
Turns for recovery	$^{c}24$	$^{c}14$	$^{cd}12$	$^{q}27$	$^{q}24$	$^{dq}20$			$^{q}21$	$^{c}16$	$^{c}34$	$^{cd}28$	$^{c}18$	$^{c}14$	$^{cd}53$	$^{n}>2\ 3/4$ $^{o}2\ 3/4$ $^{o}3,^{n}8$		$^{c}11$	$^{c}10$	$^{cd}12$	$^{c}32$	$^{c}10$	$^{cd}12$			

[c]Number of turns required for model to stop spinning after being launched with initial spin rotation.

[d]After recovery, model goes inverted.

[e]Oscillatory in pitch.

[g]Wandering spin.

[m]Oscillatory spin; range of values given.

[n]Recovery attempted by elevon reversal, stick moved from full back to full left and forward.

[o]Recovery attempted by simultaneous rudder and elevon reversal; stick moved from full back to full left and forward.

[p]Steep, wandering spin.

[q]Number of turns before model strikes safety net.

[s]Steep spin.

[t]After launching, spin progressively steepens.

CHART 5.- SPIN DATA OBTAINED WITH MODEL 5

[Unless otherwise indicated, steady-spin data are for rudder-with spins of the model in clean condition and recoveries were attempted by rapid full rudder reversal; right erect spins]

	Loading A													Loading A with wing slats extended						
Ailerons	Against					Neutral				With				Against				Neutral	With	
	Full			1/3						1/3	Full			Full		1/3				
Elevators	U (a)(b)	N (c)(d)	D (c)	$\frac{2}{3}$ U (e)	$\frac{2}{3}$ U (e)	U (a)(b)	N (c)	D (c)(e)	D (a)(e)	$\frac{2}{3}$ U (a)	U (c)(d)	N (a)	D (a)	U (e)	U (e)	N	$\frac{2}{3}$ U	U	U (c)(h)	N (a)
α, deg	----	56 71	54 63	41 51	----	----	41 47	39 45	----	----	43 58	----	----	53 58	No spin	68 76	50 55	44 54	----	----
ϕ, deg	----	7D 12U	5D 9U	2U 8U	----	----	1D 8U	1D 5U	----	----	16D 19U	----	----	3D 1U		4D 0	1D 7D	17D 6U	----	----
Ω, rps	----	0.37	0.36	0.28	----	----	0.32	0.38	----	----	---	----	----	0.32		0.39	0.32	0.31	----	----
V, fps	>290	194	191	256	>312	>294	232	230	>312	>334	250	>326	>326	209		191	214	232	----	>312
Turns for recovery	f $1\frac{1}{4}$ f $\frac{1}{2}$	∞	∞	g $1\frac{1}{4}$ g $1\frac{1}{2}$	fg $\frac{1}{2}$	f $\frac{3}{4}$ f 1	$1\frac{3}{4}$	$1\frac{3}{4}$ $2\frac{1}{2}$	----	fg $\frac{3}{4}$	1 $1\frac{1}{2}$	----	----	$1\frac{1}{4}$ $2\frac{3}{4}$		∞	g $1\frac{3}{4}$ g $2\frac{1}{4}$	$1\frac{1}{2}$ $1\frac{3}{4}$	$1\frac{1}{4}$ $1\frac{1}{2}$	f $\frac{3}{4}$

	Loading B									Loading C							
Ailerons	Against			Neutral				With		Against			Neutral			With	
	Full		1/3							Full		1/3					
Elevators	U	N (c)(h)	$\frac{2}{3}$ U	U	N	D (e)	D (e)	U (c)(h)	N	U	N	$\frac{2}{3}$ U	U	N (e)	N (e)	U (c)	N
α, deg	----	68 86	----	----	41 49	---	----	----	----	----	50 55	----	----	40 49	----	39 49	----
ϕ, deg	----	1D 3U	----	----	2D 5U	---	----	----	----	----	0 6U	----	----	2U 10U	----	10D 10U	----
Ω, rps	----	0.35	----	----	0.27	---	----	0.21	----	----	0.40	----	----	0.40	----	----	----
V, fps	>312	186	>300	>300	238	274	>312	244	>362	>326	214	>300	>332	262	>332	256	>332
Turns for recovery	f $\frac{1}{4}$ f $\frac{1}{4}$	∞	g $\frac{1}{4}$ g $\frac{1}{2}$	f $\frac{1}{4}$ f $\frac{1}{4}$	1 $1\frac{1}{4}$	2 2	----	$\frac{1}{4}$ $\frac{1}{2}$	----	f $\frac{1}{4}$ f $\frac{1}{2}$	$2\frac{3}{4}$ $3\frac{1}{4}$	fg $\frac{1}{4}$ fg $\frac{1}{4}$	f $\frac{1}{4}$ f $\frac{1}{4}$	$1\frac{3}{4}$ $1\frac{3}{4}$	fi $\frac{1}{4}$ fi $\frac{1}{2}$	$\frac{3}{4}$ $1\frac{1}{4}$	----

[a]Steep spin.
[b]Large radius spin.
[c]Wandering spin.
[d]Model oscillatory in roll and pitch.
[e]Two conditions possible.
[f]Recovery attempted before model reached final steeper attitude.
[g]Recovery attempted by reversing rudder to only 2/3 against the spin.
[h]Oscillatory spin.
[i]Visual estimate.

NACA

CHART 6.- SPIN DATA OBTAINED WITH MODEL 6

[Unless otherwise indicated, steady-spin data are for rudder-with spins of the model in clean condition and recoveries were attempted by rapid full rudder reversal; right erect spins.]

	Loading A											Loading B									
Ailerons	Against				Neutral			With				Against			Neutral			With			
								1/3	Full									1/3	Full		
Elevators	U	N	D (a)	D (a)	U	N	D	U (d)	U	N	D	U	N	D	U	N	D	U	U	N	D
α, deg				40				35, 46	54	21	20			57				42	49	21	12, 25
ϕ, deg				5D				1D	2D	19D	18D			1U				0	3D	17D,30D	8D,23D
Ω, rps				0.48				0.35	0.41	0.57	0.61			0.47				0.38	0.42	0.69	0.78
V, fps				265				277	239	343	337			221				255	224	343	337
Turns for recovery	N o s p i n	N o s p i n	N o s p i n	2 1/2 > 8 1/2 ∞ bc1 1/2 bc2 1/2 1/4	N o s p i n	N o s p i n	N o s p i n	> 4 5 ∞ e 1/2 e 1/2	∞ f ∞ f 2 1/2 f 2 3/4 g 3 1/2 g 2 1/2 g 1 1/2 h 3 1/2 h 2 1/2 i 3 1/4 i 1 1/2 i 1 1 1/2	∞ ∞ bc1 1/4 bc1 1/2	∞ ∞ bc1 1/2 bc 1 1/2	N o s p i n	N o s p i n	∞ ∞	N o s p i n	N o s p i n	N o s p i n	d2 1/2 d3 d3 1/2 h 3/4 h 1/2	∞ 9 1/2 h4 1/2 h3	∞ k1 1/2 b 1/2 b1 b1 1/2	c1 1/2 1 3/4

	Loading C													Loading D											
Ailerons	Against				Neutral				With					Against					Neutral				With		
	Full			1/3					1/3	1/3	Full			Full				1/3							
Elevators	U	N	D	2/3 U	U	N	D (a)	D (s)	U (a)	U (a)	U	N (t)	D (t)	25° U	U (p)	N (p,q)	D (q)	2/3 U	U	N (a,p)	N (a)	D (a)	D (a)	U	N	D
α, deg	36	51	60	36		40	41		31		53				34,43	42,73	41,93	24,41		34,45		44				
ϕ, deg	7D	6D	0	8D		5D	5D		0		2D				1U 10U	16U 13D	41U 30D	2D 8U		7U 2D		1U				
Ω, rps	0.50	0.47	0.50	0.47	N o	0.51	0.54	N o	0.42	N o	0.42			N o	0.38	0.38	0.64	0.49		0.42		0.39				
V, fps	264	215	199	252		252	227		270		224	304	> 304		277	233	227	270	> 258	258	> 304	270	> 287	> 290	> 356	> 336
Turns for recovery	l2 3/4 l4 3/4 l8 m1 1/2 m1 3/4 m1 3/4	∞ ∞	n2 1/2 n2 3/4 a3 1/2	3 7 > 7	s p i n	∞ ∞	6 ∞	s p i n	1 2 1/2 4	s p i n	5 6 8 o2 o3 1/2 o4 1/4 f3 1/4 f2 1/2	2 2	l1 l1 l1 1/2 l1 1/2	s p i n	2 4	∞ ∞	∞ ∞	r,j 3 r,j > 3	s1/4 s1/4	r > 4 r > 5	1 1 1/2	5 3/4 > 7	c1/4 c1/4	s1/2 s1/2	s1/2 s3/4	c,s 1/2 c,s 1

	Loading A, modification A										Loading A, modification B										
Ailerons	Against			Neutral			With				Against				Neutral			With			
							1/3	Full										1/3	Full		
Elevators	U	N	D	U	N	D	U	U	N	D	U	N	D (a)	D (a)	U	N	D	U	U	N	D
α, deg			41				43	55	23	21			31, 46					18, 45	41, 52	25	26
ϕ, deg	N o	N o	6U	N o	N o	N o	3D	4D	24D	18D	N o	N o	4D	N o	N o	N o	N o	7D, 6U	2D	8D	6D
Ω, rps			0.40				0.31	0.38	0.64	0.70			0.64					0.41	0.41	0.60	0.64
V, fps	s p i n	s p i n	277	s p i n	s p i n	s p i n	277	245	237	277	s p i n	s p i n	202	s p i n	s p i n	s p i n	s p i n	304	246	336	349
Turns for recovery			1 1/4 1 3/4				> 3 > 3	4 1/2 5	> 4 1/2 > 5	> 3 > 4			7 ∞					∞ ∞	∞ ∞	∞ ∞	9 ∞

[a]Two conditions possible.
[b]Recovery attempted by neutralization of the ailerons.
[c]Model recovers in an inverted dive.
[d]Model oscillatory in pitch.
[e]Recovery attempted by neutralization of the elevators.
[f]Recovery attempted by simultaneous reversal of rudder and elevators.
[g]Recovery attempted by simulatenous neutralization of the rudder and ailerons.
[h]Recovery attempted by simultaneous neutralization of elevators and ailerons.
[i]Recovery attempted by simultaneous reversal of the rudder and movement of ailerons full against the spin.
[j]Recovery attempted by reversal of the rudder from full with to 2/3 against the spin.
[k]Upon recovery, model goes into an inverted spin.
[l]Upon recovery, model goes into a spin in opposite direction.
[m]Recovery attempted by simultaneous reversal of rudder and elevators and movement of ailerons full with the spin.
[n]Recovery attempted by simultaneous reversal of the rudder and movement of the ailerons full with the spin.
[o]Recovery attempted by simultaneous neutralization of the ailerons and reversal of the rudder.
[p]Wandering spin.
[q]Model oscillates in roll, pitch, and yaw.
[r]Visual estimate.
[s]Recovery attempted before model reached final steeper attitude.
[t]Steep spin.

CHART 6.- SPIN DATA OBTAINED WITH MODEL 6 - Concluded

	Loading A, modification C										Loading D, modification A									
Ailerons	Against			Neutral			With				Against				Neutral			With		
							1/3	Full			Full			1/3						
Elevators	U	N	D	U	N	D	U	U	N	D	U	N	D	$\frac{2}{3}$U	U	N	D	U	N	D
α, deg	No spin	No spin	59	No spin	No spin	No spin	43	51	43	19,33		48	53	38		37		47		
∅, deg			3D, 6U				6D, 5U	0	3D	2D, 14D		0,11U	2U	7U		1U		0,11D		
Ω, rps			0.51				0.38	0.45	0.50	0.80		0.36	0.38	0.32		0.31		0.31		
V, fps			215				267	245	277	274	>350	258	227	297	>300	290	>300	246		>300
Turns for recovery			6 1/2 ∞				[j]>5 1/2 [j]>7	∞ ∞	∞ ∞	∞ ∞	1/4 1/4	∞ ∞	>6 >8	[j]3/4 [j]3/4	1/4 1/4	1/2 3/4	1/4	1 1/4 1 1/2		1/4

	Loading D, modification B														Loading D, modification C									
Ailerons	Against					Neutral						With			Against				Neutral			With		
	Full				1/3										Full			1/3						
Elevators	25° U	U	N	D	$\frac{2}{3}$U	25° U (p)	U (p)	N	N	D	D	U	N	D	U	N	D	$\frac{2}{3}$U	U	N	D	U	N	D
α, deg	No spin	33 39	43 55				34 41	36 44			No spin	23 41				45 80	48 80				47			
∅, deg		4D	1D 7D				4U 6D	1D 7D				14U 8D				15U 15D	20U 22D				1U			
Ω, rps		0.35	0.36				0.40	0.45				0.41				0.44	0.54				0.42			
V, fps		337	227	221	336	283	313	252		283		270	395	395	>300	212	215	>300	>300	>300	240	>300	>300	>300
Turns for recovery		[r]2 [r]2 [r]2 1/2	∞ ∞	∞ ∞	[jr]4 [jr]5	1/4 3/4	[r]1/2 [r]3 [r]4	∞ ∞	[rt]1/2 [rt]1/2	∞ ∞		[su]1 [su]1	[s]1 1/4 [s]1	[sc]1/4 [sc]1/2	1/2 3/4	∞ ∞	∞	[j]1/2 [j]1/2	1/2 1/2	1/2 3/4	1/4 1/4	1 1/2 2 1/4	3/4 1	1/2 3/4

[c]Model recovers in an inverted dive.

[j]Recovery attempted by reversal of the rudder from full with to 2/3 against the spin.

[p]Wandering spin.

[r]Visual observation.

[s]Recovery attempted before model reached final altitude.

[t]Steep spin.

[u]Upon recovery model goes into a wide spiral.

NACA

CHART 7.- SPIN DATA OBTAINED WITH MODEL 7

[Unless otherwise indicated, steady-spin data are for rudder-with spins of the model in clean condition; right erect spins]

	Loading A, single vertical tail																	
Ailerons	Against											Neutral			With			
	Full			2/3	1/2		1/3			1/4					1/3	Full		
Elevators	U	N	D	N	1/5 U	N	2/3 U	1/5 U	N	1/5 U	N	U	N	D	2/3 U	U	N	D
α,deg	No	No	No	No	No	No	No	No	No	No	No	No	No	No	No	No	No	No
ϕ,deg																		
Ω,rps	Spin	Spin	Spin	Spin	Spin	Spin	Spin	Spin	Spin	Spin	Spin	Spin	Spin	Spin	Spin	Spin	Spin	Spin
V,fps																		

	Loading A, modification A												Loading B, modification B											
Ailerons	Against					Neutral			With				Against					Neutral			With			
	Full				1/3				1/3	Full			Full				1/3				1/3	Full		
Elevators	U	N	D (a)	D (a)	2/3 U	U	N	D	2/3 U	U	N	D	U (a)	U (a)	N	D	2/3 U	U	N	D	2/3 U	U	N	D
α,deg	No	81	70	No	77	No	No	No	No	No	No	No	81	No	No	No	No	No	No	No	No	No	No	No
ϕ,deg		0	2D		1U								1U											
Ω,rps	Spin	0.33	0.26	Spin	0.26	Spin	Spin	Spin	Spin	Spin	Spin	Spin	0.36	Spin	Spin	Spin	Spin	Spin	Spin	Spin	Spin	Spin	Spin	Spin
V,fps		186	186		192								198											

[a]Two types of spin.

NACA

CHART 8.- SPIN DATA OBTAINED WITH MODEL 8

[Model launched erect with spinning rotation to right, rudder full right, indicated controls reversed]

Loading	Modification	Elevator setting prior to movement if any	Aileron setting	Description of model motion before control reversal	Flight path after full rudder reversal	Flight path after simultaneous full reversal of rudder and elevator	Flight path after full elevator reversal
A	None	Full up	Full against	Extremely oscillatory; alternate rolling and yawing motion	Made from 1/4 to 3/4 of a turn and went into stalled glide	Made from 1/4 to 1/2 of a turn and went into steep glide or dive	Made 1/4 of a turn and went into steep glide or dive
A	-do-	---do---	Neutral	Very oscillatory, inner wing dropped and model yawed into spin	Made from 1/4 to 1/2 of a turn and went into stalled glide	Made 1/4 of a turn and went into steep glide or inverted spin	Made from 1/4 to 1 turn and went into steep glide or dive
A	-do-	---do---	Full with	Extremely oscillatory; alternate rolling and yawing motion	Made 1/4 of a turn and went into a stalled glide	Made 1/4 of a turn and went into dive	Made from 1/4 to 1/2 of a turn and went into steep glide or dive
A	-do-	Neutral	Full against	Pitched and rolled onto back; went into left spin when launched with rudder against rotation	---	---	---
A	-do-	---do---	Neutral	Very oscillatory, inner wing dropped and model yawed into spin	Made 1/4 of a turn and went into stalled glide	---	---
A	-do-	---do---	Full with	---do---	Made 1/4 to 1 turn and went into stalled glide	---	---
A	-do-	Down (10°)	Full against	Pitched into dive	---	---	---
A	-do-	---do---	Neutral	Extremely oscillatory; alternate rolling and yawing motions	Would probably have gone on its back after approx. 1-1/2 turns	---	---
A	-do-	---do---	Full with	---do---	Made 1/2 of a turn and rolled on back	---	---
A	A	Full up	Full against	Stalled glide	---	---	---
A	A	---do---	Neutral	---do---	---	---	Went into steep dive
A	A	---do---	Full with	---do---	---	---	Went into erect spin or inverted dive
A	A	Neutral	Full against	---do---	---	---	---
A	A	---do---	Neutral	---do---	---	---	---
A	A	---do---	Full with	---do---	---	---	---
A	A	Down (10°)	Full against	Pitched into dive	---	---	---
A	A	---do---	Neutral	Extremely oscillatory; alternate rolling and yawing motion	Made 1/4 turn and pitched into a dive	---	---
A	A	---do---	Full with	---do---	---	---	---
A	B	Full up	Full with	Stalled spiral glide	Straight stalled glide approx. 1/4 turn after reversal	---	---
A	B	---do---	Neutral	---do---	---do---	---	---
A	B	---do---	Full against	---do---	---do---	---	---
A	B	Neutral	Full with	Wandering, wide radius spin	Stalled glide $1\frac{3}{4}$ turns after reversal	---	---
A	B	---do---	Neutral	---do---	Stalled glide 3/4 turn after reversal	---	---
A	B	---do---	Full against	---do---	Stalled glide 1/2 turn after reversal	---	---
A	B	Full down (20°)	Full with	Spin very oscillatory in pitch and yaw (made approx. 1 turn in flat attitude and 2 in steep attitude, then repeated)	Same as before reversal	---	---
A	B	---do---	Neutral	Steep spin	Went into inverted stalled glide approx. $4\frac{1}{2}$ turns after	---	---
A	B	---do---	Full against	Went inverted	---	---	---
B	None	Full up (30°)	Full against	Periodically pitched from a flat to a steep attitude	Steep glide, extremely oscillatory in roll and pitch	---	---
B	-do-	---do---	Neutral	Stalled glide, extremely oscillatory in roll	Same as before reversal		
B	-do-	---do---	Full with	Spin very oscillatory in roll and pitch	Made 1/2 of a turn and went into stalled glide	---	---

NACA

CHART 8.- SPIN DATA OBTAINED WITH MODEL 8-CONTINUED

Loading	Modification	Elevator setting prior to movement if any	Aileron setting	Description of model motion before control reversal	Flight path after full rudder reversal	Flight path after simultaneous full reversal of rudder and elevator	Flight path after full elevator reversal
B	None	Neutral	Full against	Rolled and pitched on back	Rolled into dive	---	---
B	-do-	---do---	Neutral	Stalled glide, very oscillatory in roll	Same as before reversal	---	---
B	-do-	---do---	Full with	---do---	---do---	---	---
B	-do-	Full down (10°)	Full against	Rolled and yawed into dive or onto back	Stalled glide, extremely oscillatory in roll	---	---
B	-do-	---do---	Neutral	Stalled glide, very oscillatory in yaw and pitch	Stalled glide	---	---
B	-do-	---do---	Full with	Stalled glide	---	---	---
C	-do-	Full up	Full against	Stalled glide, extremely oscillatory in roll, pitch, and yaw	Stalled glide, very oscillatory in roll; rotation stopped in 1 turn	---	---
C	-do-	---do---	Neutral	---do---	Stalled glide, extremely oscillatory in roll; rotation stopped in 3/4 of a turn	---	---
C	-do-	---do---	Full with	Stalled glide, extremely oscillatory in roll	Same as before reversal	---	---
C	-do-	Neutral	Full against	---do---	---do---	---	---
C	-do-	---do---	Neutral	Steep dive	Stalled glide, very oscillatory in roll	---	---
C	-do-	---do---	Full with	Stalled glide	Same as before reversal	---	---
C	-do-	Full down (10°)	Full against	Model yawed and pitched into steep dive	---do---	---	---
C	-do-	---do---	Neutral	Steep glide, very oscillatory in roll	Stalled glide	---	---
C	-do-	---do---	Full with	Stalled glide, sometimes dived into inverted position	Model went into dive	---	---
D	-do-	Full up (30°)	Full against	Stalled glide, extremely oscillatory in roll, yaw, and pitch	Stalled glide, very oscillatory in roll	---	---
D	-do-	---do---	Neutral	---do---	---do---	---	---
D	-do-	---do---	Full with	---do---	---do---	---	---
D	-do-	Neutral	Full against	Model rolled and yawed into steep dive	Same as before reversal	---	---
D	-do-	---do---	Neutral	Moderately steep spin, very oscillatory in roll	Made $1\frac{1}{2}$ turns and went into steep stalled glide	---	---
D	-do-	---do---	Full with	Stalled glide, yawed and banked	Stalled glide	---	---
D	-do-	Full down (10°)	Full against	Rolled and yawed into steep dive	Dive	---	---
D	-do-	---do---	Neutral	Very oscillatory spin, whipping motion in roll and yaw	Made more than 1 turn and went into dive	---	---
D	-do-	---do---	Full with	---do---	---	---	---
E	-do-	Full up	Full against	Violently oscillatory in roll, yaw, and pitch	---	---	---
E	-do-	---do---	Neutral	Stalled glide, very oscillatory in roll and yaw	---	---	---
E	-do-	---do---	Full with	Stalled glide, very oscillatory in roll	---	---	---
E	-do-	Neutral	Full against	Pitched and rolled onto back	---	---	---
E	-do-	---do---	Neutral	Stalled glide, very oscillatory in roll, sometimes rolled onto back	---	---	---
E	-do-	---do---	Full with	Stalled glide, very oscillatory in roll	---	---	---
E	-do-	Full down (10°)	Full against	Rolled and pitched onto back	---	---	----
E	-do-	---do---	Neutral	Rolled and pitched into vertical or inverted position	---	---	---
E	-do-	---do---	Full with	Stalled glide, slightly oscillatory in roll	---	---	---

NACA

CHART 8.- SPIN DATA OBTAINED WITH MODEL 8-CONTINUED

Loading	Modification	Elevator setting prior to movement if any	Aileron setting	Description of model motion before control reversal	Flight path after full rudder reversal	Flight path after simultaneous full reversal of rudder and elevator	Flight path after full elevator reversal
F	None	Full up (30°)	Full against	Stalled glide	Stalled glide, oscillatory in roll	---	---
F	-do-	---do---	Neutral	---do---	Same as before reversal	---	---
F	-do-	---do---	Full with	---do---	Dive or stalled glide	---	---
F	-do-	Neutral	Full against	Steep wandering and very oscillatory spin with whip	Same as before reversal	---	---
F	-do-	---do---	Neutral	---do---	Went into a steep dive in greater than $1\frac{1}{4}$ turns	---	---
F	-do-	---do---	Full with	---do---	---	---	---
F	-do-	Full down (10°)	Full against	Steep spin, extremely wandering and oscillatory	Same as before reversal	---	---
F	-do-	---do---	Neutral	Steep wandering and oscillatory spin with whip	Went into inverted dive	---	---
F	-do-	---do---	Full with	---do---	Same as before reversal	---	---
G	-do-	Full up	Full with	Stalled spiral glide	---	---	---
G	-do-	---do---	Neutral	Stalled glide	---	---	---
G	-do-	---do---	Full against	---do---	---	---	---
G	-do-	Neutral	Full with	Spiral dive	---	---	---
G	-do-	---do---	Neutral	Made 1/2 turn, dived a short distance; motion is repeated	Same as before reversal	---	---
G	-do-	---do---	Full against	Very oscillatory with wide radius; might be spin or spiral glide	Made 1/4 turn and glided (moderately steep)	---	---
G	-do-	Full down (20°)	Full with	Wandering spin with large pitching oscillations; very steep	Made 1 to $2\frac{1}{2}$ turns and went into inverted spins	---	---
G	-do-	---do---	Neutral	---do---	Same as before reversal	---	---
G	-do-	---do---	Full against	Pitched into inverted spin	---	---	---
G	A	Full up	Full with	Spiral glide	---	---	---
G	A	---do---	Neutral	---do---	---	---	---
G	A	---do---	Full against	---do---	---	---	---
G	A	Neutral	Full with	---do---	Same as before reversal	---	---
G	A	---do---	Neutral	---do---	---do---	---	---
G	A	---do---	Full against	Wandering spin; one yawing oscillation per turn of spin	Made 1/2 turn and went into stalled glide	---	---
G	A	Full down (20°)	Full with	Spiral dive	Made 1/4 turn and went into inverted dive	---	---
G	A	---do---	Neutral	---do---	Made 3/4 turn and went into inverted dive	---	---
G	A	---do---	Full against	Went into inverted spin	---	---	---
H	None	Full up	Full with	Stalled glide	---	---	---
H	-do-	---do---	Neutral	---do---	---	---	---
H	-do-	---do---	Full against	---do---	---	---	---
H	-do-	Neutral	Full with	Wide spiral glide oscillatory in pitch	Same as before reversal	---	---
H	-do-	---do---	Neutral	---do---	---do---	---	---
H	-do-	---do---	Full against	Wide radius spin	Made 1/2 turn and dived	---	---
H	-do-	Full down (20°)	Full with	Spin, oscillatory in roll, pitch, and yaw	Same as before reversal	---	---
H	-do-	---do---	Neutral	Spin, oscillatory in pitch and yaw	---do---	---	---
H	-do-	---do---	Full against	Spin, oscillatory in roll, pitch, and yaw	Made 3/4 turn and went into stalled glide; or made 1/4 turn and went into steep inverted dive	---	---

NACA

CHART 8.- SPIN DATA OBTAINED WITH MODEL 8-CONCLUDED

Loading	Modification	Elevator setting prior to movement if any	Aileron setting	Description of model motion before control reversal	Flight path after full rudder reversal	Flight path after simultaneous full reversal of rudder and elevator	Flight path after full elevator reversal
I	None	Full up	Full with	Went into a stalled glide	---	---	---
I	-do-	---do---	Neutral	---do---	---	---	---
I	-do-	---do---	Full against	---do---	---	---	---
I	-do-	Neutral	Full with	Steep spin	Same as before reversal	---	---
I	-do-	---do---	Neutral	---do---	---do---	---	---
I	-do-	---do---	Full against	---do---	Dived out after approx. 1 turn	---	---

NACA

CHART 9.- SPIN DATA OBTAINED WITH MODEL 9

[Unless otherwise indicated, steady-spin data are for rudder-with spins of the model in the clean condition with the landing gear extended and stabilizer setting zero and recoveries were attempted by rapid full rudder reversal: right erect spins]

	Loading A							Loading B							Loading C								
Ailerons	Against		Neutral			With		Against		Neutral			With		Against			Neutral			With		
Elevators	U (a)	D	U (a)	N (a)	D	U (a)	D (a)	U (a)	D (c)	U (a)	N (a)	D	U (ad)	D (ad)	U (f)	N	D (f)	U (f)	N (a)	D (a)	U (f)	N	D (a)
α, deg	-	-	-	-	No	-	-	-	-	-	-	No	--	--	-	-	-	-	-	-	-	-	-
∅, deg	-	-	-	-		-	-	-	-	-	-		--	--	-	-	-	-	-	-	-	-	-
Ω, rps	-	-	-	-	spin	-	-	-	-	-	-	spin	--	--	-	-	-	-	-	-	-	-	-
V, fps	>245	-	>245	>245		>245	>245	>245	>245	>245	>245		>245	>245	>245	-	>245	>245	>245	>245	>245	-	>245
Turns for recovery	-	-	-	[b]m $2\frac{1}{4}$		-	-	m $2\frac{1}{4}$	[e]-	-	-		--	--	m $2\frac{1}{2}$	-	m $2\frac{1}{2}$	m $2\frac{1}{2}$	m $2\frac{1}{4}$	m $2\frac{1}{4}$	m $2\frac{1}{2}$	-	m $2\frac{1}{4}$

	Loading D							Loading E										Loading F								
Ailerons	Against		Neutral			With		Against				Neutral			With			Against			Neutral			With		
Elevators	U (f)	D	U (f)	N (a)	D (a)	U (f)	D (a)	U (f)	N	D (ag)	D (g)	U (f)	N (f)	D (a)	U (f)	N	D (a)	U (f)	N (f)	D	U (f)	N (f)	D (f)	U	N	D (f)
α, deg	-	28	-	-	-	-	-	-	-	-	58	-	-	-	-	-	-	-	-	53	-	-	-	43	38	-
∅, deg	-	3U	-	-	-	-	-	-	-	-	1D	-	-	-	-	-	-	-	-	2D	-	-	-	5D	7D	-
Ω, rps	-	0.61	-	-	-	-	-	-	-	-	0.53	-	-	-	-	-	-	-	-	0.76	-	-	-	0.66	0.80	-
V, fps	>245	162	>245	>245	>245	>245	>245	>245	-	>245	89	>245	>245	>245	>245	-	>245	>245	>245	104	>245	>245	>245	147	169	>245
Turns for recovery	m $2\frac{1}{2}$	3	m $2\frac{1}{2}$	m $2\frac{1}{4}$	m $2\frac{1}{4}$	m $2\frac{1}{2}$	m $2\frac{1}{4}$	m $2\frac{1}{2}$	-	-	∞	m $2\frac{1}{2}$	m $2\frac{1}{2}$	m $2\frac{1}{4}$	m $2\frac{1}{2}$	-	m $2\frac{1}{4}$	m $2\frac{1}{2}$	m $2\frac{1}{2}$	∞	m $2\frac{1}{2}$	m $2\frac{1}{2}$	m $2\frac{1}{2}$	∞	-	m $2\frac{1}{2}$

	Loading G							Loading H							Loading I								
Ailerons	Against		Neutral			With		Against		Neutral			With		Against				Neutral			With	
Elevators	U	D (i)	U (a)	N (a)	D (a)	U	D	U (f)	D	J (jk)	N (jk)	D (fj)	U (j)	D (i)	U (a)	N (i)	N (i)	D	U	N	D	U	N	D (a)
α, deg	No	-	-	-	-	43	No	-	69	-	-	-	39	-	-	No	-	67	43	62	59	49	45	-
∅, deg		-	-	-	-	1D		-	4D	-	-	-	7D	-	-		-	1D	0	1D	2D	1D	0	-
Ω, rps	spin	-	-	-	-	0.88	spin	-	0.72	-	-	-	0.57	-	-	spin	-	0.78	0.64	0.71	0.73	0.68	0.66	-
V, fps		>245	>245	>245	>245	147		245	116	>245	>245	>245	184	>245	>245		184	122	202	155	145	158	184	>245
Turns for recovery		m 2	m $2\frac{1}{4}$	m $2\frac{1}{4}$	< $2\frac{1}{4}$	8		m $2\frac{1}{2}$	∞	m $2\frac{1}{4}$	m $2\frac{1}{4}$	m $2\frac{1}{2}$	m $2\frac{1}{4}$	> 2	-		3/4	∞	∞ 8	∞	∞	∞	∞	-

	Loading A leading edge of stabilizer 30° down						Loading C leading edge of stabilizer 30° down							Loading F leading edge of stabilizer 30° down								Loading I, leading edge of stabilizer 30° down		
Ailerons	Against		Neutral		With		Against		Neutral			With		Against			Neutral			With		Against		
Elevators	U	D (c)	U	N (c)	U	D	U	D (c)	U (c)	N (c)	D (c)	U (a)	D (c)	U	N	D	U (k)	N (f)	D	U	D	U	N	D
α, deg	No	-	-	-	59	59	No	-	-	-	-	-	-	No	-	No	-	-	-	58	54	No	No	-
∅, deg		-	-	-	3D	2D		-	-	-	-	-	-		-		-	-	-	2D	3D			-
Ω, rps	spin	-	-	-	0.57	0.77	spin	-	-	-	-	-	-	spin	-	spin	-	-	-	0.72	0.72	spin	spin	-
V, fps		-	-	-	87	87		-	-	-	-	> 245	-		-		>245	>245	>245	125	124			191
Turns for recovery		[h]5	-	[h]5	∞	∞		[h]5	[h]4	[h]4	[h]5	m $2\frac{1}{4}$	[h]5		-		m $2\frac{1}{4}$	m $2\frac{1}{2}$	-	∞	∞			> $6\frac{1}{2}$

	Loading I rudder-against spins landing gear retracted									Loading I leading edge of stabilizer 30° down landing gear retracted								
Ailerons	Against			Neutral			With			Against				Neutral		With		
Elevators	U	N	D	U	N	D	U	N	D (a)	U	N	D (i)	D (i)	U	D	U	N	D
α, deg	No	No	-	No	-	-	-	-	-	No	No	Ni	-	40	-	64	-	65
∅, deg			-		-	-	-	-	-				-	2D	-	0	-	1D
Ω, rps	spin	spin	-	spin	-	-	-	-	-	spin	spin	spin	-	0.72	-	0.68	0.77	0.84
V, fps			127		165	149	160	195	>245				173	216	-	160	142	136
Turns for recovery			-		-	-	-	-	-				[h]6	[h]6	-	∞	∞	∞

[a]Steep spin.

[b]Recovery attempted before model reached final steeper attitude

[c]Moderately steep spin with increasing radius.

[d]Model attitude did not change after rudder reversal.

[e]Slow recovery.

[f]Steep spin with increasing radius.

[g]Two types of spin.

[h]When launched in a flat attitude with the rudder against the rotation, the model ceased rotating after indicated number of turns.

[i]Steep spin with small radius.

[j]Wandering spin, rate of rotation varies.

[k]Wide radius of spin

[l]Two conditions possible.

[m]The model recovered in less turns than indicated.

CHART 10.- SPIN DATA OBTAINED WITH MODEL 10

[Unless otherwise indicated, steady-spin data are for rudder-with spins of the model in the clean condition and recoveries were attempted by rapid full rudder reversal, propellers off except] where indicated

	Loading A, left erect spins															
Ailerons	Against								Neutral					With		
	Full			1/2	1/3		1/4									
Elevators	U	N (a)	D (a)	D (a)	$\frac{2}{3}$ U (b)	$\frac{2}{3}$ U (a)(b)	D (b)	D (b)	U (b)	U (a)(b)	N (b)	N (a)(b)	D	U (a)	N	D
α, deg	No spin	68 82	69 77	65 76	-----	74 85	---	----	No spin	64 72	-----	48 72	-----	60 76	-----	-----
ϕ, deg		7D 3U	7D 5U	4D 4U	-----	6D 3U	---	----		2D 4U	-----	3D 2U	-----	3D 3U	-----	-----
Ω, rps		0.71	0.59	0.60	-----	0.78	---	0.61		0.41	0.55	0.54	-----	0.56	-----	-----
V, fps		182	194	196	>304	196	>304	199		262	199	274	>304	210	>304	>304
Turns for recovery		c_5 ∞ c_7 1/2	∞	∞	d,e_1 d,e_1 1/2	e_∞ $f_{>4}$ 1/2 $f_{>5}$ 1/2 g_∞	d_3 d_4	∞		1 1 1/2	h_∞	h_1 1/2	d_1 1/2 d_2	∞	d_1 d_2	d_1

	Loading A, right erect spins											
Ailerons	Against				Neutral			With				
	Full			1/3				1/3		Full		
Elevators	U	N	D (a)(i)	$\frac{2}{3}$ U	U	N (a)	D	$\frac{2}{3}$ U (b)	$\frac{2}{3}$ U (a)(b)	U	N	D
α, deg	No spin	-------	61 89	---------	------	42 50	--------	-----	57 63	------	-------	------
ϕ, deg		-------	15D 10U	---------	------	7D 6U	--------	-----	2D 2U	------	-------	------
Ω, rps		0.72	0.52	---------	------	0.55	--------	-----	0.52	0.51	-------	------
V, fps		188	188	> 304	>338	274	>370	>332	244	244	>304	> 304
Turns for recovery		∞	∞	$d,e_{3/4}$ $d,e_{1\ 1/2}$	$d_{1/2}$ d_1	2 7	d_2 $d_{3\ 3/4}$	d,e_2 d,e_2	e_∞	∞	d_2 $d_{2\ 1/2}$	$d_{3/4}$ $d_{1\ 1/2}$

	Loading A, left spins propeller pitch = 30°				Loading A, right erect spins, stability flaps deflected 25° down									
Ailerons	Against	With			Against					Neutral		With		
	1/3	1/3		Full	Full				1/3			1/3		
Elevators	$\frac{2}{3}$ U	$\frac{2}{3}$ U (b)	$\frac{2}{3}$ U (a)(b)	U (a)	U	N (a)(j)	D (a)(b)	D (a)(b)	$\frac{2}{3}$ U	U	N (k)	$\frac{2}{3}$ U (a)	U	N (k)
α, deg	No spin	No spin	40 57	40 48	No spin	70 86	64 79	50 57	--------	No spin	---	40 48	------	-----
ϕ, deg			2D 7U	0 5U		3D 4U	12D 8U	4D 3U	--------		---	4D 4U	------	-----
Ω, rps			0.33	0.30		0.45	0.52	0.45	0.40		---	0.36	0.40	0.42
V, fps			241	244		177	199	233	227		>340	280	262	>370
Turns for recovery			e >6	>2 3/4 >6		>5 ∞	∞	5	$e_{>1}$ $e_{1\ 1/4}$ $e_{1\ 1/2}$		l_3 l_3	$e_{>1\ 1/2}$ $e_{>3}$	>3 1/2 >6	>2 >3

[a]Oscillatory spin; range of values or average value given.

[b]Two conditions possible.

[c]Recovery attempted by simultaneous reversal of rudders to full against the spin and stick to longitudinally full back.

[d]Recovery attempted before final steep attitude.

[e]Recovery attempted by reversing rudders to 2/3 against the spin.

[f]Recovery attempted by simultaneous reversal of rudders to full against the spin and of stick to longitudally full back and laterally full against the spin.

[g]Recovery attempted by simultaneous reversal of rudders to full against the spin and of stick longitudinally forward and laterally full with the spin.

[h]Visual estimate.

[i]Wide radius spin.

[j]Wandering spin.

[k]Steep spin.

[l]Model recovers in a steep dive.

CHART 11.- SPIN DATA OBTAINED WITH MODEL 11

[Unless otherwise indicated, steady,spin data are for rudder-with spins of the model in the clean condition and recoveries were attempted by rapid full rudder reversal, elevator U, N, and D signifies stick positions of back, neutral, and forward, right erect spins]

	Loading A, rudders against the spin									Loading A									Loading A, flaps down 45°								
Ailerons	Against			Neutral			With			Against			Neutral			With			Against			Neutral				With		
Elevators	U (a)	N (a)	D (a)	U (b)	N (b)	D (b)	U (c)	N (c)	D (c)	U (a)	N (a)	D (a)	U (d)	N (d)	D (d)	U (b)	N (b)	D (b)	U	N	D (d)	U (dg)	U (dg)	N (d)	D (d)	U (b)	N	D (b)
α, deg	-	-	-	-	-	-	-	-	-	-	-	-	82	86	83	-	-	-	90	90	81	84	88	86	84	-	-	-
ϕ, deg	-	-	-	-	-	-	-	-	-	-	-	-	41D 30U	39D 38U	32D 29U	-	-	-	5U	6U	36D 50U	20D 25U	3D 9U	8D 11U	19D 18U	-	-	-
Ω, rps	-	-	-	-	-	-	-	-	-	-	-	-	0.13	0.08	0.10	-	-	-	0.69	0.04	0.22	0.18	0.36	0.15	0.19	-	-	-
V, fps	-	-	-	-	-	-	-	-	-	-	-	-	121	121	118	-	-	-	107	113	123	118	118	116	118	-	-	-
Turns for recovery	-	-	-	-	-	-	-	-	-	-	-	-	$e\frac{1}{2}$	$e\frac{1}{4}$	$e\frac{3}{4}$	-	-	-	----	----	----	---	---	---	---	-	-	-

	Loading B									Loading C									Loading D								
Ailerons	Against			Neutral			With			Against			Neutral			With			Against			Neutral			With		
Elevators	U (a)	N	D (a)	U (a)	N (a)	D (a)	U (b)	N	D (b)	U (a)	N	D (a)	U (d)	N	D (d)	U (b)	N	D (b)	U (a)	N	D (a)	U (d)	N (d)	D	U (b)	N	D (b)
α, deg	-	-	-	-	-	-	-	-	-	-	-	-	82	-	80	-	-	-	-	-	-	80	83	-	-	-	-
ϕ, deg	-	-	-	-	-	-	-	-	-	-	-	-	33D 20U	-	30D 26U	-	-	-	-	-	-	19D 24U	42D 39U	-	-	-	-
Ω, rps	-	-	-	-	-	-	-	-	-	-	-	-	0.10	-	0.12	-	-	-	-	-	-	0.08	0.06	-	-	-	-
V, fps	-	-	-	-	-	-	-	-	-	-	-	-	118	-	118	-	-	-	-	-	-	121	121	-	-	-	-
Turns for recovery	-	-	-	-	-	-	-	-	-	-	-	-	$e\frac{3}{4}$	-	$e\frac{1}{2}$	-	-	-	-	-	-	$e\frac{3}{4}$	$e\frac{3}{4}$	-	-	-	-

	Loading E									Loading F									Loading G								
Ailerons	Against			Neutral			With			Against			Neutral			With			Against			Neutral				With		
Elevators	U (a)	N	D (a)	U (a)	N	D (a)	U (b)	N	D (b)	U (a)	N	D (a)	U (d)	N	D (d)	U (b)	N	D (b)	U (a)	N (a)	D (a)	U	N	D (g)	D (g)	U (h)	N (h)	D (i)
α, deg	-	-	-	-	-	-	-	-	-	-	-	-	76	---	72	-	-	-	-	-	-	56	57	42	61	-	-	-
ϕ, deg	-	-	-	-	-	-	-	-	-	-	-	-	22D 32U	---	17D 12U	-	-	-	-	-	-	3D	2D	6U	1D	-	-	-
Ω, rps	-	-	-	-	-	-	-	-	-	-	-	-	0.08	---	---	-	-	-	-	-	-	0.15	0.15	0.20	---	-	-	-
V, fps	-	-	-	-	-	-	-	-	-	-	-	-	123	123	121	-	-	-	-	-	-	125	129	138	135	-	-	-
Turns for recovery	-	-	-	-	-	-	-	-	-	-	-	-	$e\frac{1}{4}$	$e\frac{1}{2}$	$e\frac{1}{4}$	-	-	-	-	-	-	$f\frac{1}{2}$	$f\frac{3}{4}$	>10	$f\frac{3}{4}$ $f1\frac{1}{2}$	-	-	-

	Loading H								
Ailerons	Against			Neutral			With		
Elevators	U	N	D	U	N	D	U	N	D
α, deg	----	58	46	58	52	41	32	33	35
ϕ, deg	----	8U	14U	5U	6U	12U	4U	6U	9U
Ω, rps	0.39	0.38	0.40	0.41	0.39	0.42	0.43	0.42	0.46
V, fps	123	129	135	118	123	141	160	157	160
Turns for recovery	∞	>5	∞	∞	∞	∞	$>2\frac{1}{2}$	$>4\frac{1}{2}$	∞

[a]Oscillated violently in pitch and roll. Rate of rotation decreased as the violence of the oscillations increased.
[b]Initial rotation stopped. Fuselage remained approximately horizontal.
[c]Initial rotation stopped. Model then began to rotate in opposite direction and oscillated violently in pitch and roll. Rate of rotation decreased as violence of the oscillations increased.
[d]Oscillated in roll.
[e]Fuselage remained approximately horizontal after rotation stopped in number of turns indicated.
[f]Model nosed over into steep dive after rotation stopped in number of turns indicated.
[g]Two types of spin.
[h]Slid around with large radius. Nose approximately 40° below horizontal.
[i]Slid around with large radius. Nose approximately 40° below horizontal. After a few turns nosed over and went into inverted dive.

CHART 11.- SPIN DATA OBTAINED WITH MODEL 11 (CONCLUDED)

	Loading A, landing condition									Loading A			Loading A, flaps down 45°			Loading A			Loading A, flaps down 45°			Loading A, freely rotating propeller installed								
Ailerons	Against			Neutral			With			Modification A			Modification A			Modification B			Modification B			Against			Neutral			With		
Elevators	U (d)	N (d)	D (d)	U (d)	N (d)	D (d)	U (b)	N	D (b)	U (b)	N (b)	D (j)	U (d)	N (d)	D (j)	U (j)	N (j)	D (k)	U (d)	N	D (k)	U (a)	N (a)	D (a)	U	N (d)	D (d)	U (c)	N (c)	D (b)
α, deg	83	80	68	82	89	78	-	-	-	-	-	-	75	79	-	-	-	-	79	83	-	-	-	-	-	85	80	-	-	-
ϕ, deg	39D 51U	42D 48U	41D 44U	21D 25U	16D 23U	20D 18U	-	-	-	-	-	-	16D 12U	21D 17U	-	-	-	-	41D 26U	5U	-	-	-	-	-	36D 31U	28D 25U	-	-	-
Ω, rps	0.13	0.14	0.17	0.17	0.13	0.14	-	-	-	-	-	-	0.11	0.11	-	-	-	-	0.31	0.27	-	-	-	-	-	0.07	0.10	-	-	-
V, fps	123	121	121	121	118	121	-	-	-	-	-	-	116	116	-	-	-	-	107	107	-	-	-	-	121	121	118	-	-	-
Turns for recovery	>3 1/2	e 1 3/4	>5	e 1	e 1	e 3/4	-	-	-	-	-	-	e 1 1/4	e 1/2	-	-	-	-	l 2 3/4	l 2	-	-	-	-	e 1/2	e 1/2	e 1/2	-	-	-

	Loading A, modification C									Loading A, modification D									Loading A, modification E									Loading A, modification F.								
Ailerons	Against			Neutral			With			Against			Neutral			With			Against			Neutral			With			Against			Neutral			With		
Elevators	U	N	D (a)	U	N	D (j)	U	N	D (j)	U	N	D (a)	U	N	D (m)	U	N	D (m)	U (a)	N	D (a)	U (d)	N (d)	D (b)	U (b)	N	D (b)	U (a)	N (a)	D (a)	U (n)	N (n)	D (n)	U (b)	N (b)	D (b)
α, deg	-	-	-	-	-	-	-	-	-	-	-	-	-	-	-	-	-	-	-	-	-	76	80	-	-	-	-	-	-	-	-	-	-	-	-	-
ϕ, deg	-	-	-	-	-	-	-	-	-	-	-	-	-	-	-	-	-	-	-	-	-	34D 19U	34D 46U	-	-	-	-	-	-	-	-	-	-	-	-	-
Ω, rps	-	-	-	-	-	-	-	-	-	-	-	-	-	-	-	-	-	-	-	-	-	0.08	0.14	-	-	-	-	-	-	-	-	-	-	-	-	-
V, fps	-	-	-	-	-	-	-	-	-	-	-	-	-	-	-	-	-	-	-	-	-	127	129	-	-	-	-	-	-	-	-	-	-	-	-	-
Turns for recovery	-	-	-	-	-	-	-	-	-	-	-	-	-	-	-	-	-	-	-	-	-	e 3/4	e 1/2	-	-	-	-	-	-	-	-	-	-	-	-	-

	Loading A, modification G									Loading A, modification H								
Ailerons	Against			Neutral			With			Against			Neutral			With		
Elevators	U	N	D (a)	U	N	D (d)	U	N	D (b)	U	N	D (a)	U	N	D (d)	U	N	D (b)
α, deg	-	-	-	-	-	78	-	-	-	-	-	-	-	-	84	-	-	-
ϕ, deg	-	-	-	-	-	12D 9U	-	-	-	-	-	-	-	-	20D 30U	-	-	-
Ω, rps	-	-	-	-	-	---	-	-	-	-	-	-	-	-	---	-	-	-
V, fps	-	-	-	-	-	121	-	-	-	-	-	-	-	-	121	-	-	-
Turns for recovery	-	-	-	-	-	e 3/4	-	-	-	-	-	-	-	-	e 3/4	-	-	-

[a]Oscillated violently in pitch and roll. Rate of rotation decreased as the violence of the oscillations increased.
[b]Initial rotation stopped. Fuselage remained approximately horizontal.
[c]Initial rotation stopped. Model then began to rotate in opposite direction and oscillated violently in pitch and roll. Rate of rotation decreased as violence of the oscillations increased.
[d]Oscillated in roll.
[e]Fuselage remained approximately horizontal.
[j]Initial rotation stopped. Glided forward rapidly with nose approximately 15° below horizontal.
[k]Initial rotation stopped. Model nosed over into steep dive.
[l]Glided forward rapidly with nose approximately 15° below horizontal.
[m]Initial rotation stopped. Glided forward for a few feet 35° below horizontal and then nosed over into a steep dive.
[n]Initial rotation stopped. Glided with slight rotation to right. Fuselage approximately horizontal. Oscillation in roll of approximately ±25°.

CHART 12.- SPIN DATA OBTAINED WITH MODEL 12

[Unless otherwise indicated, steady-spin data are for rudder-with spins of the model in the clean condition and recoveries were attempted by rapid full rudder reversal; elevator U, N, and D signifies stick positions of back, neutral, and forward, right erect spins]

	Loading A, right spins													Loading A, left spins													
Ailerons	Against					Neutral				With				Against				Neutral				With					
Elevators	U (a)	N (ab)	N (bc)	D (c)	Free	U (d)	N (d)	D (d)	Free (c)	U (d)	N	D (d)	Free (d)	U (a)	N (a)	D (c)	Free (c)	U (d)	N (d)	D (c)	Free (c)	U (d)	N (d)	D (bd)	D (bi)	Free (bd)	Free (b)
α, deg	90 74	95 59				74	91 71	76 58	73 62	88 62	---	97 66	83 57	82 54	94 55			66 54	86 69			73 62	97 64	74 61	---	79 52	
ø, deg	6U 8D	9U 17D	No	No	No	12U 18D	22U 5D	19U 12D	18U 7D	18U 19D	---	6U 18D	10U 15D	10U 6D	2U	No	No	9U 12D	13U 15D	No	No	12U 12D	19U 24D	10U 7D	---	11U 21D	No
Ω, rps	0.19	0.15	spin	spin	spin	0.19	0.21	0.26	0.20	0.20	0.13	0.21	0.21	---	0.11	spin	spin	0.13	0.11	spin	spin	0.15	0.09	0.16	---	0.16	spin
V, fps	182	182				182	171	174	171	171	171	171	166	179	171			171	171			171	161	171	---	185	
Turns for recovery	$e\frac{3}{4}$	$f\frac{1}{2}$				e_1	e_1	$g_1\frac{1}{4}$	$g\frac{1}{2}$	$e\frac{1}{2}$	$f\frac{1}{2}$	g_1 $g_1\frac{1}{2}$	$h_1\frac{1}{2}$	$f\frac{1}{2}$	$e\frac{1}{2}$			$e\frac{1}{4}$	$f\frac{1}{4}$			$e\frac{1}{4}$	$e\frac{1}{4}$	$h\frac{1}{2}$ h_1	---	$f\frac{3}{4}$	

	Loading A, wing-tip trimmers used in conjunction with the ailerons, 1 to 1 deflection ratio between ailerons and the trimmers						Loading A, wing-tip trimmers used in conjunction with the rudders, 1 to 1 deflection ratio between the rudders and the trimmers. Trimmer moves up as adjacent rudder moves outboard.											Loading A, wing-tip trimmer used in conjunction with the elevator. 2 to 1 deflection ratio between the elevator and the trimmers. Trailing edge of trimmer moves up as trailing edge of elevator moves down.					
Ailerons	Against			With				Against			Neutral			With					Against		Neutral		With		
Elevators	U (c)	D (c)	Free (c)	U (a)	D (ab)	D (bi)	Free (a)	U (j)	D (j)	Free (j)	U (j)	N (dk)	D	Free (j)	U (d)	N (d)	D (j)	Free (ab)	Free (bj)	U (c)	D (c)	U (c)	D (d)	U (d)	D (dl)
α, deg	No	No	No	94 63	78 59	----	71 56	No	No	No	No	81 71	No	No	65	88 60	No	74 41	No	No	No	No	60 87	92 54	92 53
ø, deg	spin	spin	spin	29U 31D	11U 24D	----	2U 16D	spin	spin	spin	spin	1U 43D	spin	spin	12U 11D	38U 13D	spin	2U 14D	spin	spin	spin	spin	3U 31U	44U 47D	23U 22D
Ω, rps				0.17	0.18	----	0.17					0.08			0.12	0.12		0.16					0.18	0.21	0.18
V, fps				171	174	----	174					171			182	189		198					174	189	171
Turns for recovery				$e\frac{1}{2}$	e_1	----	$e\frac{1}{2}$					$e\frac{1}{4}$			$e\frac{3}{4}$	$e\frac{1}{2}$		----					$h_1\frac{1}{4}$	$e_1\frac{1}{4}$	$h\frac{3}{4}$

	Loading B													Loading C										
Ailerons	Against				Neutral					With				Against			Neutral				With			
Elevators	U (c)	D (b)	D (bd)	Free (m)	U (j)	N (a)	D (m)	Free (bd)	Free (b)	U (d)	D (bd)	D (bd)	Free (dk)	U (a)	D	Free (o)	U (d)	N (a)	D (dl)	Free (dl)	U (d)	D (dl)	Free (p)
α, deg			74 41			92 72		68 52		71 58	70	75 47	78 58	89 55			87 30	96 60	77 56	72 57	73 60	77 60	----
ø, deg	No	No	10U 11D	No	No	58U 75D	No	16U 9D	No	2D 33D	28U 25D	10U 17D	17U 25D	50U 25D	No	No	38U 38D	56U 67D	22U 31D	13U 7D	20D 41D	32U 20D	----
Ω, rps	spin	spin	0.11	spin	spin	0.09	spin	0.18	spin	0.17	0.16	0.15	0.18	0.23	spin	spin	0.20	0.17	0.23	0.24	0.19	0.25	----
V, fps			182			182		182		190	182	177	185	190			179	183	177	179	174	174	----
Turns for recovery			----			$e\frac{1}{2}$		h_1		$e\frac{1}{2}$	$f\frac{3}{4}$	$f\frac{1}{2}$	n_2 $n_2\frac{1}{2}$	$e\frac{3}{4}$			$e\frac{1}{2}$	$f\frac{1}{2}$	h_1	$h\frac{1}{2}$	$e\frac{1}{2}$	$h_1\frac{1}{4}$	----

[a]Model oscillatory in roll and pitch, range of values or average value given.

[b]Two conditions possible.

[c]Model recovered by pitching and/or rolling out of the spin. Motion during recovery was extremely violent.

[d]Oscillatory spin; range of values or average value given.

[e]After recovery, model glided forward at a flat attitude for an appreciable distance before striking safety net.

[f]After recovery, model glided forward at a flat attitude for a short distance before striking safety net.

[g]After recovery, model glided forward at a flat attitude for a short distance and then nosed down into a steep dive.

[h]After recovery model nosed down into a steep dive.

[i]Model too oscillatory in pitch and roll to test completely.

[j]Model yawed in a circle of extremely large radius at a high angle of attack. Rotational velocity was low.

[k]Wandering spin.

[l]Model oscillates in pitch and wanders; appears to gallop.

[m]Model recovered of its own accord in a wide spiral glide.

[n]Model recovered in a wide spiral glide.

[o]Model went into an inverted spin after a short vertical dive.

[p]High rate of descent. Model executed one violent oscillation in pitch per turn of spin.

NACA

CHART 12.- SPIN DATA OBTAINED WITH MODEL 12 (CONCLUDED)

	Loading D															Loading E												
Ailerons	Against					Neutral					With					Against				Neutral					With			
Elevators	U (c)	N (c)	D	Free (bd)	Free (b)	U (d)	N (d)	D (d)	Free (bd)	Free (bd)	U (d)	N (bd)	D (bq)	Free (br)	Free (bd)	U (a)	N (a)	D (c)	Free (c)	U (d)	N (c)	D (bd)	D (bk)	Free (j)	U (d)	N (d)	D (d)	Free (j)
α, deg	No spin	No spin	No spin	57 41	No spin	73 21	85 48	49 39	73 50	52 37	75 63	84 55	---	76 43	44	95 47	81 65	No spin	No spin	98 68	No spin	93 64	---	No spin	90 65	98 79	102 61	No spin
Ø, deg				22U 0		21U 18D	50U 42D	8U 5D	11U 7D	1U 15D	30U 12D	19U 14D	---	0 14D	13U 6D	61U 48D	35U 64D			38D 48D		42U 47D	---		24U 44D	---	39U 44D	
Ω, rps				0.18		0.13	0.20	0.19	0.22	0.21	0.20	0.22	---	0.20	0.17	0.16	0.17			0.18		0.22	---		0.16	0.13	0.16	
V, fps				204		174	171	203	177	206	177	177	---	182	208	193	185			182		185	---		179	182	171	
Turns for recovery				----		$e\frac{1}{4}$	$e\frac{1}{2}$	$h\frac{1}{2}$	h_1	h_1	$e\frac{3}{4}$	$h_1\frac{1}{2}$	---	$h_1\frac{1}{4}$	----	$e\frac{1}{2}$	e_1			e_1		$e\frac{3}{4}$	---		$f\frac{3}{4}$	e_1	$e\frac{1}{2}$	

	Loading A, flaps down 45°						Loading A, landing gear extended								Loading A, landing condition									
Ailerons	Neutral			With			Neutral						With		Against		Neutral				With			
Elevators	D (d)	Free (bd)	Free (bs)	U	D (a)	Free (dl)	D (dt)	D (dt)	D (ct)	Free (dt)	Free (dt)	Free (st)	D (d)	Free (d)	D (i)	Free (d)	U (bs)	U (bd)	N (d)	Free (d)	U (d)	D (d)	Free (d)
α, deg	79 62	82 63	----	----	87 39	87 49	72 57	66 41	----	60 41	50 37	----	61 46	65 52	No spin	66 22	----	65 54	91 69	62 47	69 58	78 58	64 29
Ø, deg	10U 27D	25U 18D	----	----	9U 9D	3D	15U 10D	11U 8D	----	1D	3U	----	8D	3D		16U 2U	----	12U 14D	27U 40D	9U 3D	20U 15D	15U 25D	13U 15D
Ω, rps	0.21	0.19	----	----	0.17	0.19	0.20	0.19	----	0.19	0.23	----	0.16	0.16		0.15	----	0.14	0.09	0.16	0.16	0.16	0.14
V, fps	179	179	----	----	179	179	185	198	----	182	201	----	195	193		198	----	176	171	188	179	176	188
Turns for recovery	$h_1\frac{1}{4}$	$h\frac{3}{4}$	----	----	$h\frac{3}{4}$	$h\frac{3}{4}$	$hu\frac{3}{4}$	$hu\frac{1}{2}$	----	$hu\frac{3}{4}$	----	----	$h\frac{3}{4}$	$h\frac{1}{2}$ h_1		$h\frac{1}{2}$	----	$e\frac{1}{2}$	$e\frac{1}{4}$	$hu\frac{1}{2}$	$f\frac{1}{4}$	$hu\frac{1}{2}$	$hu\frac{1}{4}$

[a]Model oscillatory in roll and pitch, range of values or average value given.

[b]Two conditions possible.

[c]Model recovered by pitching and for rolling out of the spin. Motion during recovery was extremely violent.

[d]Oscillatory spin, range of values or average value given.

[e]After recovery, model glided forward at a flat attitude for an appreciable distance before striking safety net.

[f]After recovery, model glided forward at a flat attitude for a short distance before striking safety net.

[g]After recovery, model glided forward at a flat attitude for a short distance, and then nosed down into a steep dive.

[h]After recovery model nosed down into a steep dive.

[i]Model too oscillatory in pitch and roll to test completely.

[j]Model yawed in a circle of extremely large radius at a high angle of attack. Rotational velocity was low.

[k]Wandering spin.

[l]Model oscillates in pitch and wanders; appears to gallop.

[q]Model oscillatory in pitch and roll, too wandering to test.

[r]Model oscillatory in pitch and appears to gallop; range of values or average value given.

[s]Model spins steeply and smoothly with radius of spin too large to test.

[t]Three conditions possible.

[u]Model pitched into an inverted flat attitude after short vertical dive.

CHART 13.- INVERTED SPINNING CHARACTERISTICS OF THOSE MODELS FOR WHICH INVERTED SPIN TESTS WERE PERFORMED

[Model loadings as shown on table II, clean condition inverted spins performed with models spinning to pilot's right, rudder full with the direction of spinning rotation, recovery attempted by reversing rudder full against the spin, no modifications on models]

	Model 1, loading A									Model 2, loading A								Model 4, loading A									Model 5, loading A				
Ailerons	Against			Neutral			With			Against		Neutral			With			Against			Neutral			With			Against	Neutral			With
Elevators	U	N	D	U	N (a)	D	U	N	D (a)	U	D	U	N	D	U (d)	N (e)	D	U	N	D	U	N	D	U	N	D	U (d)	U (d)	N' (d)	D (d)	U (d)
α, deg	No	No	76	47	42	52	70	55	---	No	No	No	No	No	46 17		No	No	No	No	No	No	No	No	No	-	55 66	51 58	54 62	50 61	49 57
ϕ, deg	Spin	Spin	3U	2U	1U	5U	5U	4U	---	Spin	Spin	Spin	Spin	Spin	6U 7D		Spin	Spin	Spin	Spin	Spin	Spin	Spin	Spin	Spin	-	4U 10D	4U 0	5U 4D	2U 6D	5U 8D
Ω, rps			0.72	0.36	0.42	0.49	0.59	0.47	---						0.30											-	0.33	0.32	0.35	0.36	0.33
V, fps			158	227	235	173	175	193	---						229											-	203	220	200	191	214
Turns for recovery				b	b	2	∞	c							∞	∞										-	1/2	1/2, 3/4	1, 1 3/4	f 3/4 f 3/4	1/2 1/2

	Model 6, loading B										Model 7, loading A														Model 8, Loading G						
Ailerons	Against			Neutral			With				Against					Neutral		With							Against			Neutral			With
							1/3	Full			Full			1/3				1/3		Full											
Elevators	U	N	D	U	N	D	U	U	N	D	U	N	D (j)	2/3U	2/3D (h)	U (ik)	N (ik)	D (n)	2/3U (i)	2/3D (h)	U (i)	N (i)	D (i)	U (n)	N (m)	D (m)	U (o)	N (m)	D (m)	D (p)
α, deg	No	No	No	No	No	No	No	50	46		82	78	No	76	No	No	No	No	No	No	No	No	No	No	No	No	-	No	No	No
ϕ, deg	Spin	Spin	Spin	Spin	Spin	Spin	Spin	4D	3D		14D	1D	Spin	14D	Spin	Spin	Spin	Spin	Spin	Spin	Spin	Spin	Spin	Spin	Spin	Spin	-	Spin	Spin	Spin
Ω, rps								0.46	0.48	0.50	0.38	0.40		037													-			
V, fps								221	233	252	186	186		210													-			
Turns for recovery								$2\frac{1}{2}$, $2\frac{1}{2}$ g_1, g_1, g_1 3/4, 3/4 3/4, 3/4 g_2, g_3 3/4, $1\frac{1}{2}$ $1\frac{3}{4}$, $1\frac{1}{2}$	4, 4, 3		3/4 1/2	1 l	l		l													q 1/4			

	Model 10, loading A			Model 11, loading A												Model 12, loading A										
Ailerons	Against	Neutral	With	Against			Neutral			With			Against			Neutral						With				
Elevators	U (d)	N	U	U (o)	N (o)	D (o)	U (r)	N (s)	D (s)	U (r)	N (r)	D (r)	U (u)	N (u)	D (u)	Free (u)	U (d)	N (d)	D (v)(w)	D (d)(w)	D (w)	Free (d)	U (d)	N (d)	D (d)(x)	D (v)(x)	Free (d)
α, deg	47			-	-	-	-	85	82	-	-	-	No	No	No	No	85 69	101 57	-	86 55	No	78 47	75 59	78 67	73 51	-	81 68
ϕ, deg	6U 6D			-	-	-	-	34U 31D	8U 18D	-	-	-	Spin	Spin	Spin	Spin	33U 25D	50U 54D	-	25U 13D	Spin	45U 42D	23U 20D	17U 45D	13U 14D	-	17U 15D
Ω, rps		0.61	0.58	-	-	-	-	0.07	0.07	-	-	-					0.13	0.18	-	0.18		0.17	0.15	0.14	0.20	-	0.22
V, fps	approx. 250	194	250	-	-	-	-	121	121	-	-	-					176	182	-	174		174	171	167	176	-	176
Turns for recovery	f, 1-1/2 3	∞	f, > 3 f, > 5				f, t, 1/4	f, t, 1/4									y 3/4 y_1		-	f, 3/4		3/4	y, 1/2	y, 1/4	1-1/2	-	1 1-1/2

[a]Model oscillatory in pitch.
[b]Model went into a steep rapid spin.
[c]Model went into spin that was oscillatory in pitch, rate of rotation, and rate of descent after rudder was reversed.
[d]Oscillatory spin; range of values or average value given.
[e]Wandering and oscillatory spin.
[f]Visual estimate.
[g]Recovery attempted by neutralization of (1) rudder and ailerons, (2) elevator and ailerons, (3) ailerons.
[h]Model pulls out in a dive, rolling about longitudinal axis.
[i]Model pulls out in stalled attitude, rolling about longitudinal body axis.
[j]Model rolls erect remaining in a stalled glide with rolling and pitching oscillations.
[k]Model remains in a glide.
[l]Model launched with rudder against spin. No spin obtained.
[m]Went erect.
[n]Model immediately rolled with ailerons into erect position, pitched into inverted position, pitched back into erect position and dived.
[o]Oscillated violently in pitch and roll.
[p]Increased rolling oscillations caused model to go into stalled glide.
[q]Came out in a steep or inverted dive and tended to pitch into flat inverted position.
[r]Initial rotation stopped; fuselage remained approximately horizontal.
[s]Oscillated in roll.
[t]Fuselage remained approximately horizontal.
[u]Model recovered by pitching and rolling out of spin; motion during recovery was extremely violent.
[v]Model too oscillatory in pitch and roll to test completely.
[w]Three conditions possible.
[x]Two conditions possible.
[y]After recovery model glided forward at a flat attitude.

CHART 14.- RESULTS OF SPIN-RECOVERY PARACHUTE TESTS FOR MODELS

[Model in clean condition except where otherwise indicated; all results are for spin rotation to pilot's right, dimensions given are full-scale]

Model	Attitude	Parachute location	Parachute diameter (ft)	Towline length (ft)	Drag coefficient	Loading	Turns for recovery									Remarks
							Elevator									
							U			2/3U		N		D		
							Ailerons									
							Against	Neutral	With	1/3 against	1/3 with	Neutral	With	Against	Neutral	
2	Erect	Outboard wing	5.0	2.5	0.70	A	----	∞	----	----	----	----	----	----	----	Towline attached between pitch flap and elevon
	-do-	--------do--------	-do-	15.0	-do-	--do---	----	1, $1\frac{1}{2}$	∞	----	----	----	----	----	----	Do.
	-do-	--------do--------	-do-	30.0	-do-	--do--	----	1, $1\frac{1}{2}$	∞	----	----	> 3	∞	----	----	Do.
	-do-	--------do--------	7.0	2.5	-do-	--do--	----	$\frac{3}{4}$, ∞	∞	----	----	$\frac{3}{4}$, $1\frac{1}{4}$	∞	----	----	Do.
	-do-	--------do--------	-do-	15	-do-	--do--	----	$\frac{3}{4}$, $1\frac{1}{2}$	∞	----	----	$1\frac{1}{4}$, 2	∞	----	----	Do.
	-do-	--------do--------	-do-	30	-do-	--do--	----	$\frac{1}{2}$, $\frac{3}{4}$	$1\frac{1}{2}$, 2	----	----	$\frac{1}{2}$, $1\frac{1}{2}$	∞	----	----	Do.
	-do-	--------do--------	8.8	2.5	-do-	--do--	----	$\frac{1}{2}$, ∞	[a]3, [a]9	----	----	$\frac{1}{2}$, $1\frac{1}{2}$	∞	----	----	Do.
	-do-	--------do--------	-do-	15	-do-	--do--	----	$\frac{1}{2}$, $\frac{3}{4}$	$1\frac{1}{4}$, $>2\frac{1}{2}$	----	----	$\frac{1}{4}$, 1	$1\frac{1}{2}$, 4	----	----	Do.
	-do-	--------do--------	-do-	30	-do-	--do--	----	$\frac{1}{2}$	$1\frac{1}{2}$	----	----	$\frac{1}{2}$, $1\frac{1}{4}$	$1\frac{1}{2}$, 2	----	----	Do.
	-do-	Outboard wing tip	7.0	10	-do-	--do--	----	$\frac{1}{2}$, $\frac{3}{4}$	$1\frac{1}{2}$	----	----	1	1, $1\frac{3}{4}$	----	----	----------
	-do-	--------do--------	-do-	30	-do-	--do--	----	$\frac{1}{2}$	$1\frac{1}{4}$, $1\frac{3}{4}$	----	----	$\frac{1}{2}$, 1	1, $1\frac{1}{4}$	----	----	----------
	-do-	--------do--------	5.0	10	-do-	--do--	----	$\frac{3}{4}$, 1	$2\frac{1}{2}$, $3\frac{1}{2}$	----	----	$1\frac{1}{2}$, >3	∞	----	----	----------
	-do-	--------do--------	-do-	15	-do-	--do--	----	$\frac{3}{4}$, $1\frac{1}{4}$	∞	----	----	[a] > $3\frac{1}{2}$	∞	----	----	----------
	-do-	--------do--------	-do-	30	-do-	--do--	----	$\frac{1}{2}$, $1\frac{1}{4}$	2, >[a]3	----	----	1, > 2	∞	----	----	----------
4	-do-	Outboard wing tip	4.0	19.50	-do-	E	----	----	3, $3\frac{1}{2}$	----	----	----	----	----	----	25-percent semispan slats extended
	-do-	--------do--------	-do-	9.75	-do-	--do--	----	----	$3\frac{1}{2}$, 4	----	----	----	----	----	----	Do.
	-do-	--------do--------	5.33	19.50	-do-	--do--	----	----	$2\frac{1}{4}$, $3\frac{1}{2}$	----	----	----	----	----	----	Do.
	-do-	--------do--------	-do-	9.75	-do-	--do--	----	----	$2\frac{3}{4}$, $3\frac{1}{2}$	----	----	----	----	----	----	Do.
	-do-	--------do--------	6.67	19.50	-do-	--do--	----	----	$1\frac{3}{4}$	----	----	----	----	----	----	Do.
	-do-	--------do--------	-do-	9.75	-do-	--do--	----	----	$\frac{3}{4}$, $1\frac{1}{4}$	----	----	----	----	----	----	Do.
	-do-	--------do--------	8.0	-do-	-do-	--do--	----	----	$1\frac{1}{4}$	----	----	----	----	----	----	Do.
	Inverted	--------do--------	6.67	19.50	-do-	--do--	$1\frac{1}{4}$, $1\frac{3}{4}$	----	----	----	----	----	----	----	----	Do.
	-do-	--------do--------	8.0	19.50	-do-	--do--	1, $1\frac{1}{2}$	----	----	----	----	----	----	----	----	Do.
	Erect	--------do--------	5.60	-do-	-do-	D B	----	----	>4, $>4\frac{1}{2}$	----	----	----	----	----	----	Do.
	-do-	--------do--------	6.67	-do-	-do-	--do--	----	$1\frac{1}{2}$, $2\frac{1}{4}$	$1\frac{3}{4}$, $2\frac{1}{4}$	----	----	----	----	----	----	Do.
	Inverted	--------do--------	-do-	-do-	-do-	--do--	----	----	3	----	----	----	----	----	----	Do.
	-do-	--------do--------	8.0	-do-	-do-	--do--	----	----	$2\frac{1}{4}$, $2\frac{3}{4}$	----	----	$1\frac{3}{4}$	----	----	----	Do.
5	Erect	--------do--------	4.24	25	0.83	A	----	$\frac{1}{2}$	----	1	----	----	----	----	----	----------
	-do-	Parachutes at both wing tips	4.39	-do-	-do-	--do--	----	----	----	1, >2	----	----	----	----	----	Two parachutes opened simultaneously
	-do-	--------do--------	7.31	-do-	0.70	--do--	----	----	----	$\frac{1}{2}$, $>2\frac{1}{2}$	----	----	----	----	----	----------
	-do-	--------do--------	8.77	-do-	-do-	--do--	----	$\frac{1}{4}$, $\frac{1}{2}$	----	$\frac{1}{4}$, $\frac{3}{4}$	----	----	----	----	----	----------
6	Erect	Tail cone	8	13.4	0.7	A	----	----	2, $2\frac{1}{4}$, 4, >8	----	----	----	----	----	----	----------
	-do-	--------do--------	10	-do-	-do-	--do--	----	----	1, $1\frac{1}{2}$, $2\frac{1}{2}$, $2\frac{1}{2}$	----	----	----	----	----	----	----------
	-do-	--------do--------	11.7	-do-	-do-	--do--	----	----	1, 1, 1, $1\frac{1}{2}$	----	----	----	----	----	----	----------
	-do-	Outboard wing tip	3.3	7.9	-do-	--do--	----	----	>8, >9	----	----	----	----	----	----	----------
	-do-	--------do--------	5.0	-do-	-do-	--do--	----	----	2, $2\frac{1}{3}$, > 3	----	----	----	----	----	----	----------
	-do-	--------do--------	6.2	-do-	-do-	--do--	----	----	$1\frac{1}{4}$, $1\frac{1}{4}$, 1-3/4	----	----	----	----	----	----	----------

NACA

CHART 14.- RESULTS OF SPIN-RECOVERY PARACHUTE TESTS FOR MODELS - Concluded

Model	Attitude	Parachute location	Parachute diameter (ft)	Towline length (ft)	Drag coefficient	Loading	Turns for recovery									Remarks
							Elevator									
							U			2/3U		N		D		
							Ailerons									
							Against	Neutral	With	1/3 against	1/3 with	Neutral	With	Against	Neutral	
8	Erect	Tail cone	3.6	27	0.70	A	-----	$\frac{1}{2}$	-----	-----	-----	-----	-----	-----	-----	$x/\bar{c}$ = 0.14
	-do-	--------do-------	-do-	-do-	-do-	--do--	-----	-----	-----	-----	-----	-----	-----	-----	$2\frac{1}{2}, 2\frac{3}{4}$	Do.
	-do-	--------do-------	4.5	-do-	-do-	--do--	-----	$\frac{3}{4}$, 1	-----	-----	-----	-----	-----	-----	-----	Do.
	-do-	--------do-------	-do-	-do-	-do-	--do--	-----	-----	-----	-----	-----	-----	-----	-----	$1\frac{1}{4}, 1\frac{1}{2}$	Do.
	-do-	--------do-------	5.5	-do-	-do-	G	-----	1, 2	-----	-----	-----	-----	-----	-----	-----	Do.
	-do-	--------do-------	-do-	-do-	-do-	--do--	-----	-----	-----	-----	-----	-----	-----	-----	1, $2\frac{3}{4}$	Do.
	-do-	--------do-------	7.1	-do-	-do-	--do--	-----	$\frac{1}{4}, \frac{3}{4}$	-----	-----	-----	-----	-----	-----	-----	Do.
	-do-	--------do-------	-do-	-do-	-do-	--do--	-----	-----	-----	-----	-----	-----	-----	-----	$1\frac{1}{4}$, 2	Do.
	-do-	--------do-------	-do-	-do-	-do-	--do--	-----	$\frac{1}{2}$	-----	-----	-----	-----	-----	-----	-----	$x/\bar{c}$ = 0.19
	-do-	--------do-------	-do-	13.5	-do-	--do--	-----	$\frac{1}{4}$	-----	-----	-----	-----	-----	-----	-----	$x/\bar{c}$ = 0.14
	-do-	--------do-------	-do-	-do-	-do-	--do--	-----	-----	-----	-----	-----	-----	-----	-----	1, $1\frac{3}{4}$	Do.
	-do-	--------do-------	-do-	-do-	-do-	--do--	-----	∞	-----	-----	-----	-----	-----	-----	-----	$x/\bar{c}$ = 0.19
	-do-	--------do-------	-do-	-do-	-do-	--do--	-----	-----	-----	-----	-----	-----	-----	-----	$\frac{1}{4}, \frac{3}{4}$	Do.
	-do-	Arresting gear mast (aft)	13.3	30	0.70	A	-----	-----	-----	2	$2\frac{1}{2}, 3\frac{1}{4}$	-----	∞	-----	>3	----------
	-do-	--------do-------	16.0	30	-do-	--do--	>7	-----	-----	$1-3/4$, >4-1/2	2, $2\frac{3}{4}$	-----	2, ∞	-----	-----	----------
	-do-	--------do-------	-do-	23	-do-	--do--	-----	-----	-----	-----	-----	-----	∞	-----	-----	----------
	-do-	--------do-------	-do-	15	-do-	--do--	>3	-----	-----	-----	-----	-----	∞	-----	-----	----------
	-do-	--------do-------	20	30	-do-	--do--	-----	-----	-----	-----	-----	-----	4, ∞	-----	-----	----------
	-do-	--------do-------	20	15	-do-	--do--	-----	-----	-----	-----	-----	-----	3, 4	-----	-----	----------
	-do-	Arresting gear mast and outboard end of wing	[b]6.9 [c]13.3	30 0	-do-	--do--	-----	-----	-----	-----	$2\frac{3}{4}, 4\frac{3}{4}$	-----	-----	-----	-----	Two parachutes ~ wing tip parachute attached at c/4
10	-do-	--------do-------	[b]11.7 [c]6.9	-do- -do-	-do-	--do--	-----	-----	-----	-----	3, $3\frac{3}{4}$	-----	-----	-----	-----	Do.
	-do-	--------do-------	[b]-do- [c]8.0	-do- -do-	-do-	--do--	-----	-----	-----	-----	$2\frac{1}{2}, 3\frac{1}{4}$	-----	-----	-----	-----	Do.
	-do-	--------do-------	[b]-do- [c]10.6	-do- -do-	-do-	--do--	-----	-----	-----	-----	$>2\frac{1}{2}$	-----	-----	-----	-----	Do.
	-do-	--------do-------	[b]13.3 [c]6.9	-do- -do-	-do-	--do--	-----	-----	-----	-----	$1\frac{3}{4}, 2\frac{3}{4}$	-----	-----	-----	-----	Do.
	-do-	--------do-------	[b]-do- [c]-do-	-do- 8.0	-do-	--do--	-----	-----	-----	$1\frac{1}{2}, 1\frac{3}{4}$	-----	-----	-----	-----	-----	Do.
	-do-	--------do-------	[b]-do- [c]8.0	-do- 0	-do-	--do--	-----	-----	-----	-----	1, $1\frac{3}{4}$	-----	-----	-----	-----	Do.
	-do-	--------do-------	[b]-do- [c]-do-	-do- 3	-do-	--do--	-----	-----	-----	1, $1\frac{3}{4}$	$1\frac{1}{4}, 1\frac{1}{2}$	-----	$5\frac{1}{2}$, 8	-----	-----	Do.
	-do-	--------do-------	[b]-do- [c]11.2	-do- 8	-----	-------	-----	-----	-----	-----	1, 2	-----	-----	-----	-----	Do.

[a]Visual estimate.

[b]Attached to arresting gear mast.

[c]Attached to outboard wing tip at the c/4 line.

NACA

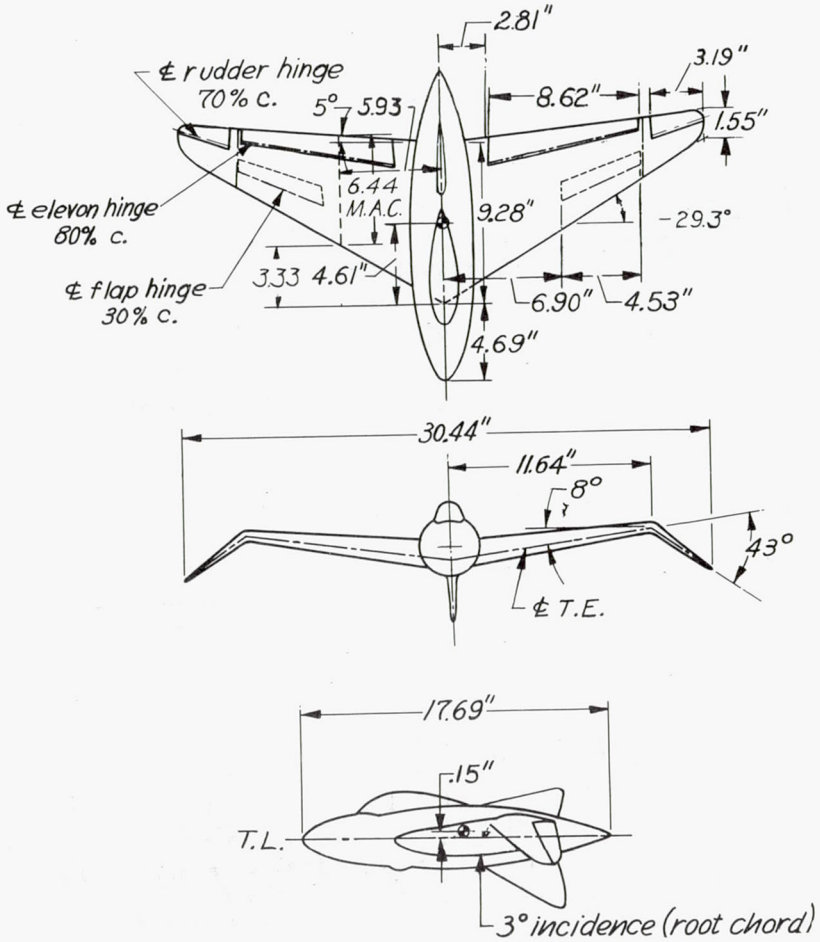

(a) Model 1.

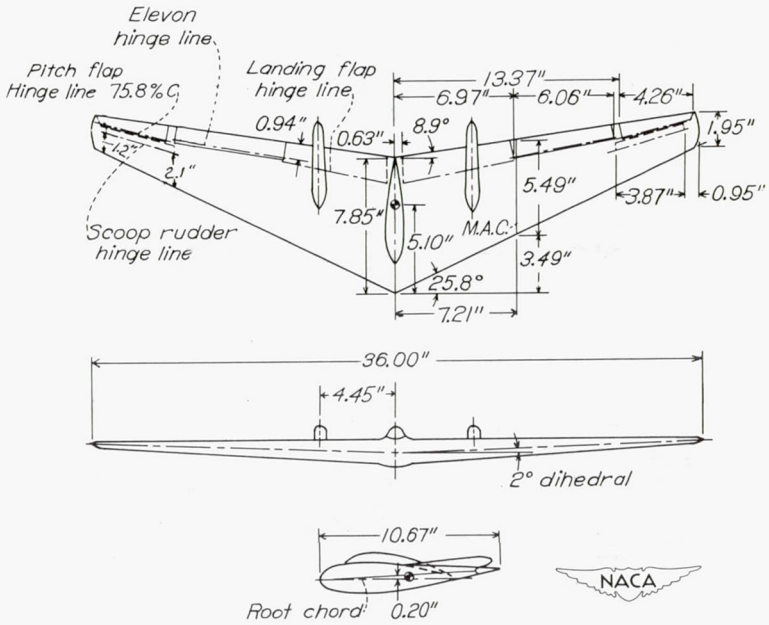

(b) Model 2.

Figure 1.- Three-view drawings of models as tested.

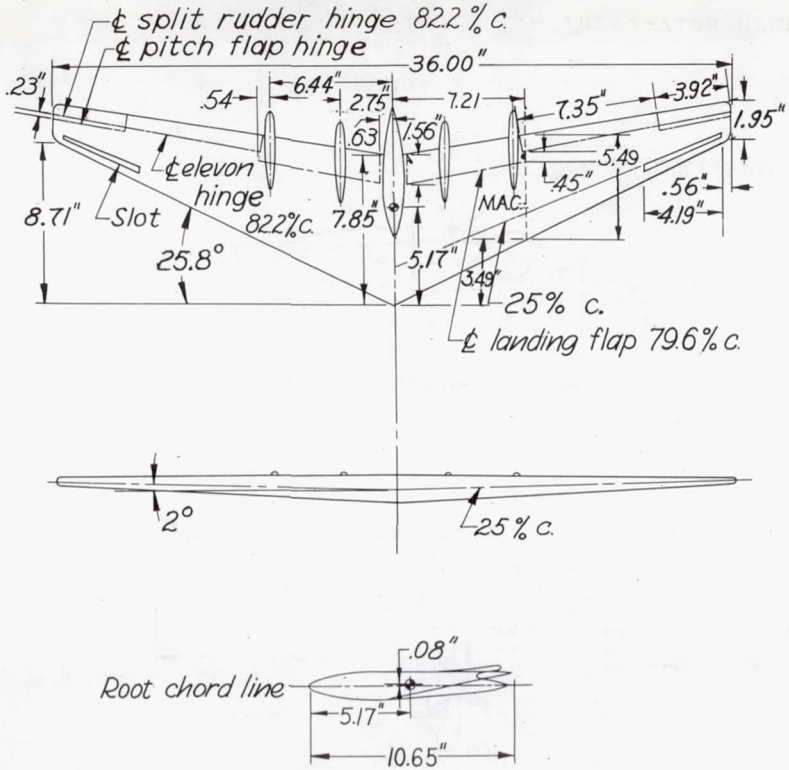

(c) Model 3.

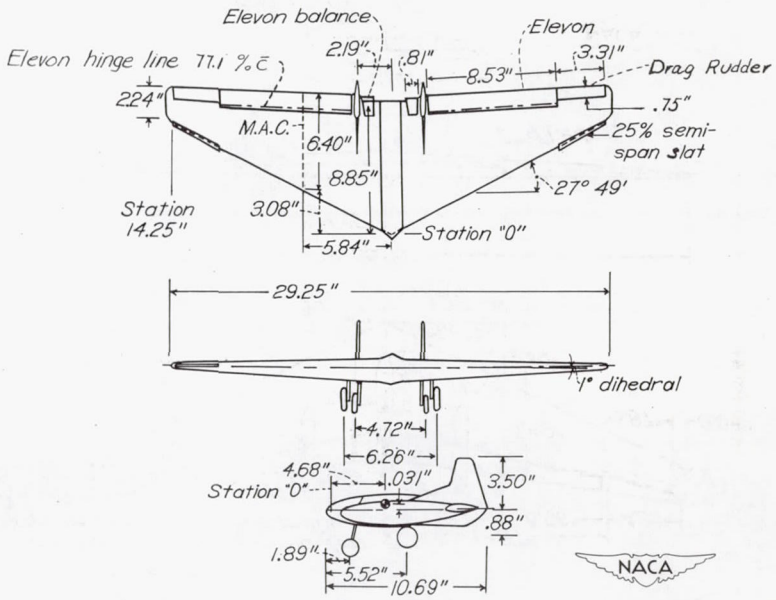

(d) Model 4.

Figure 1.- Continued.

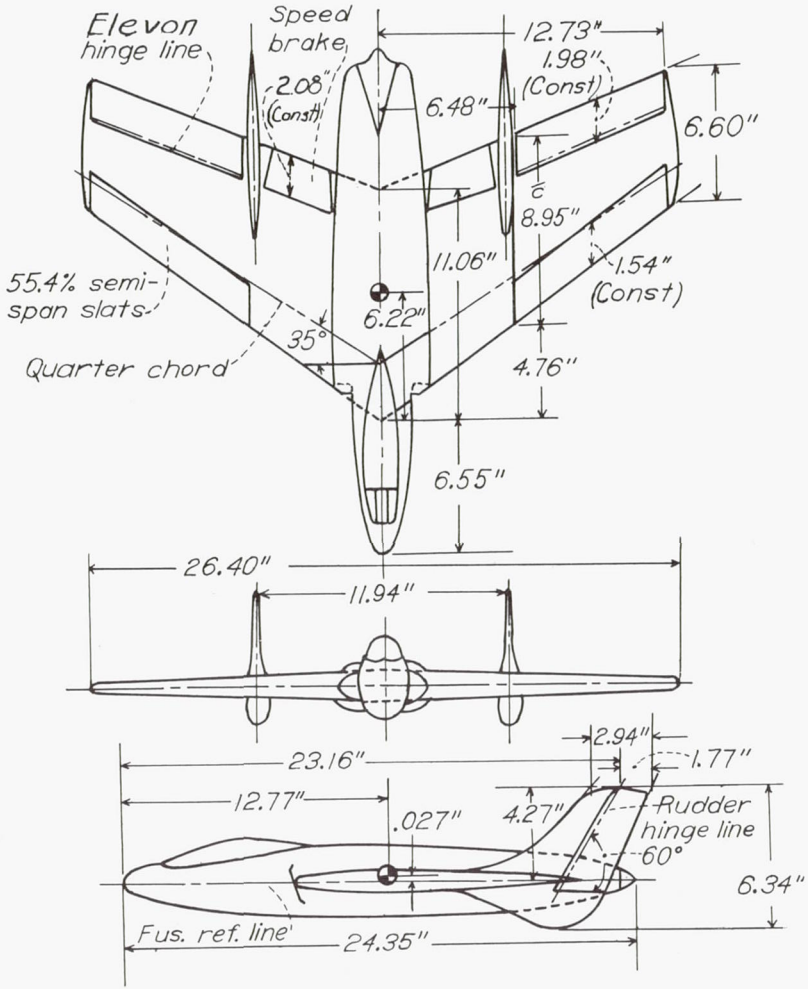

(e) Model 5.

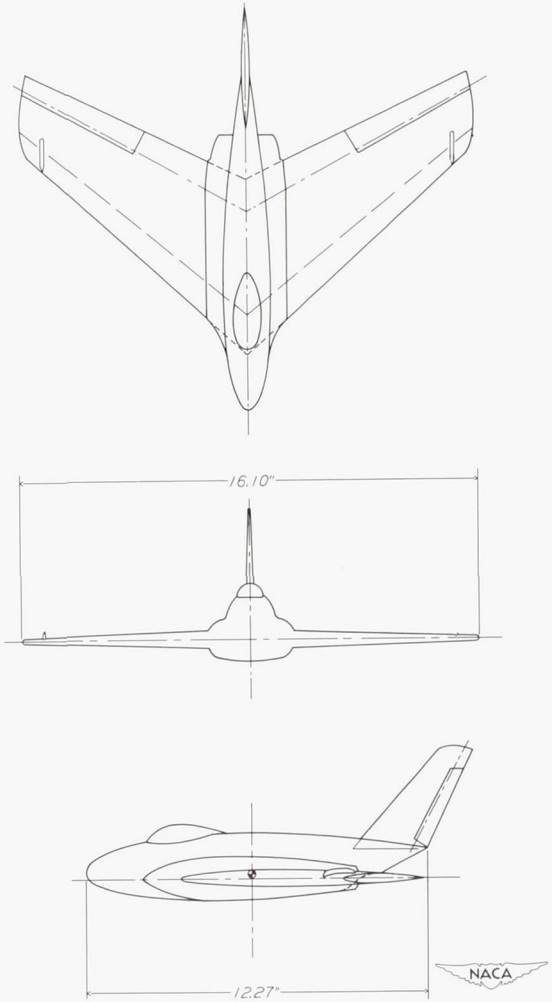

(f) Model 6.

Figure 1.- Continued.

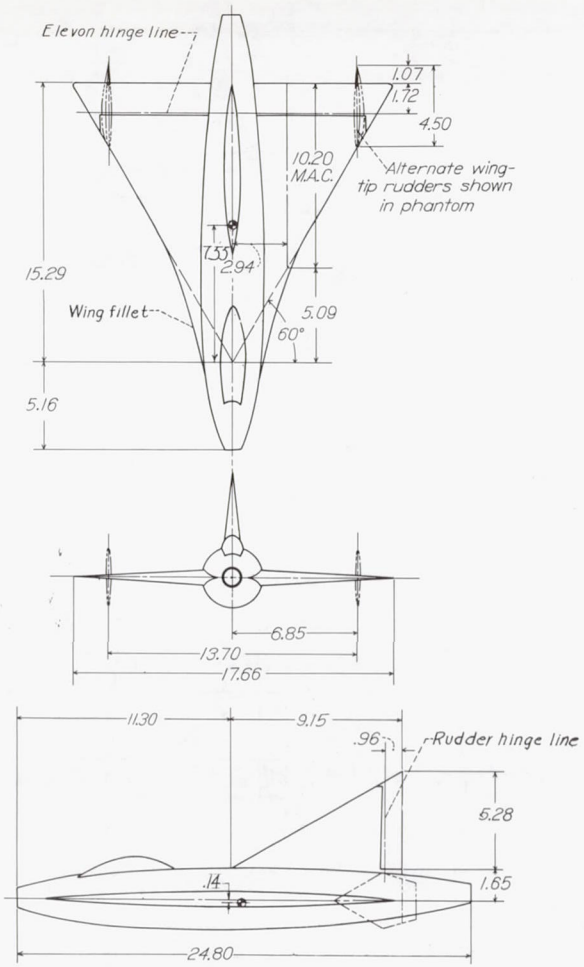

(g) Model 7.

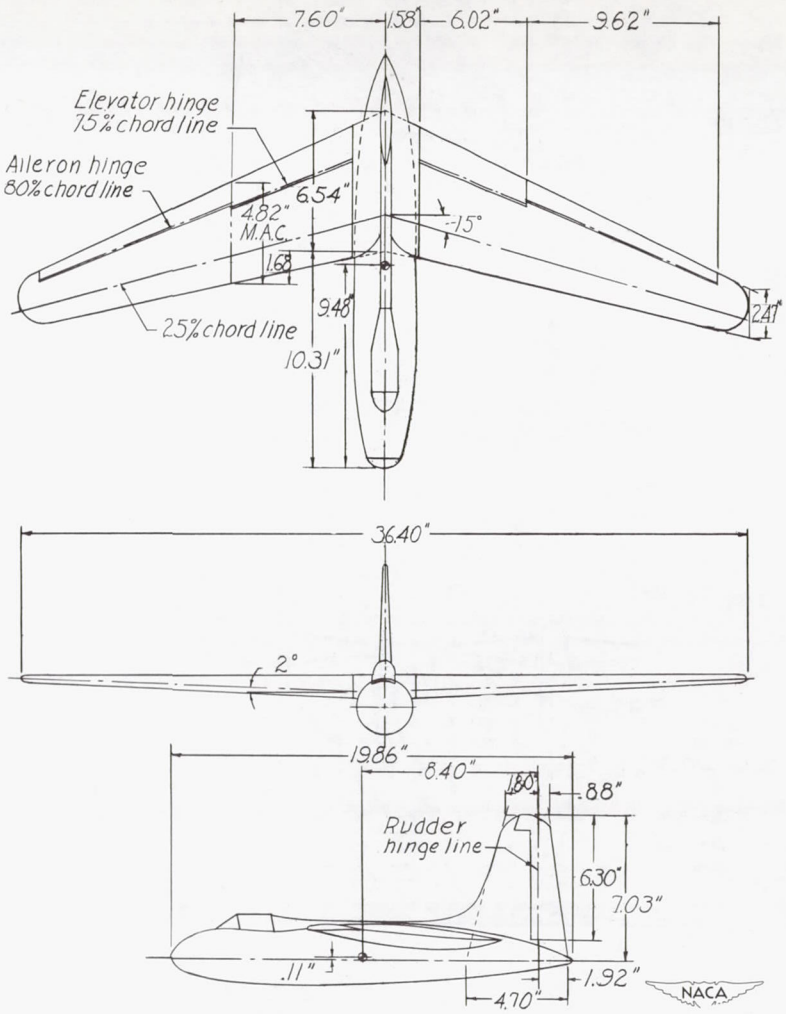

(h) Model 8.

Figure 1.- Continued.

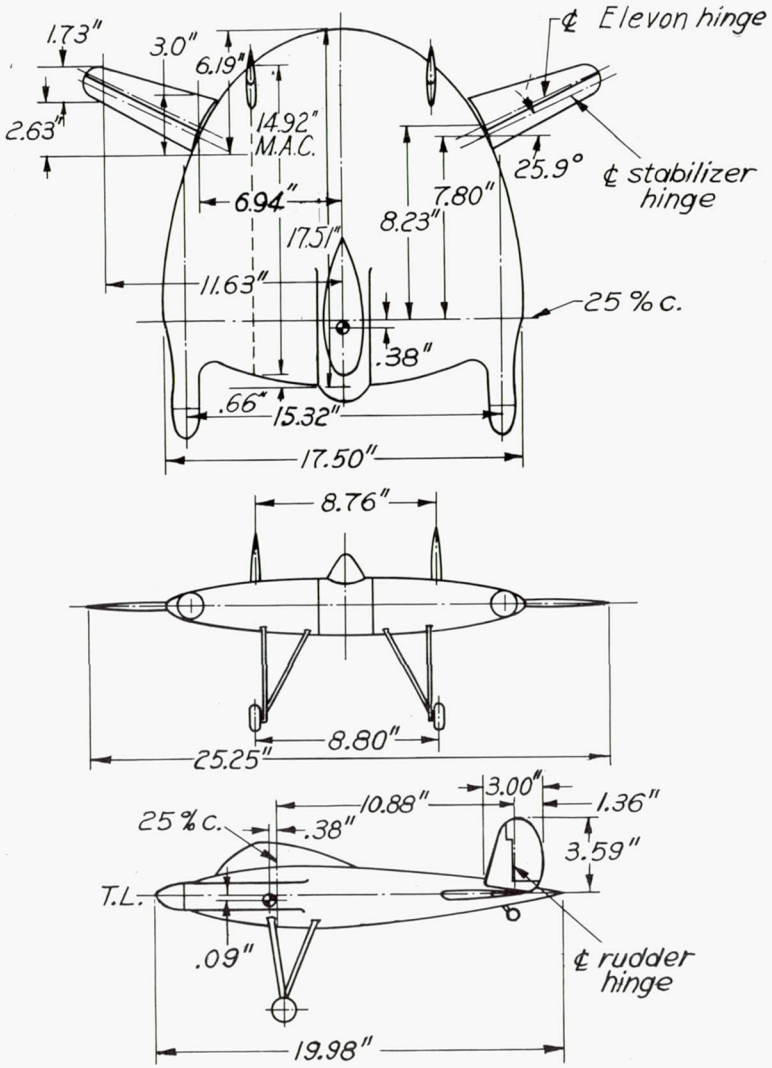

(i) Model 9.

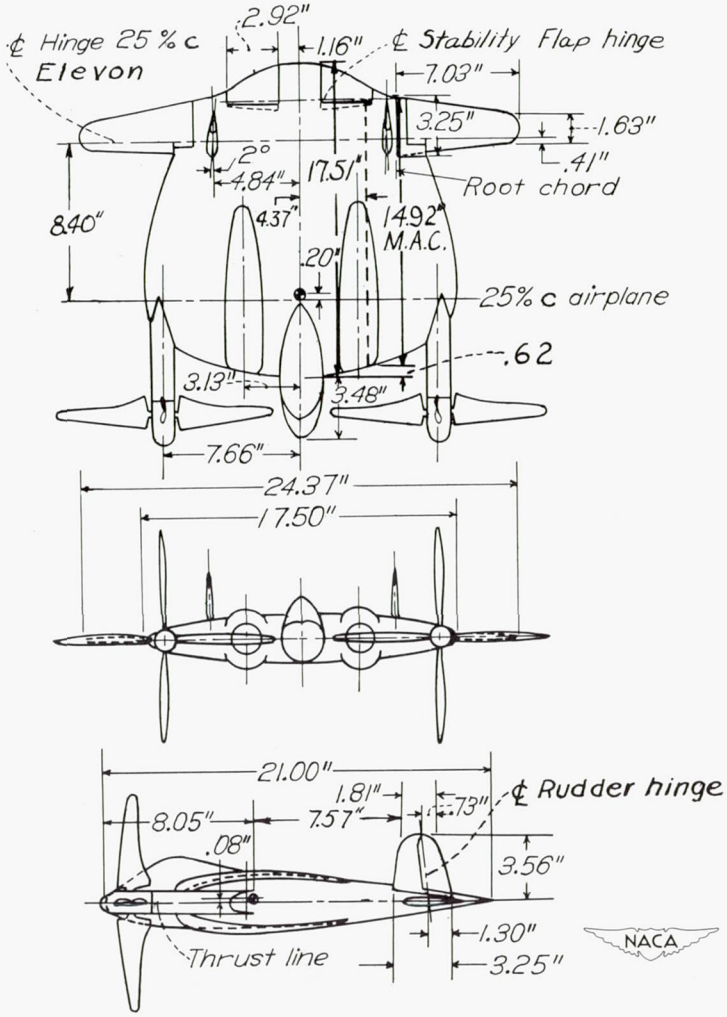

(j) Model 10.

Figure 1.- Continued.

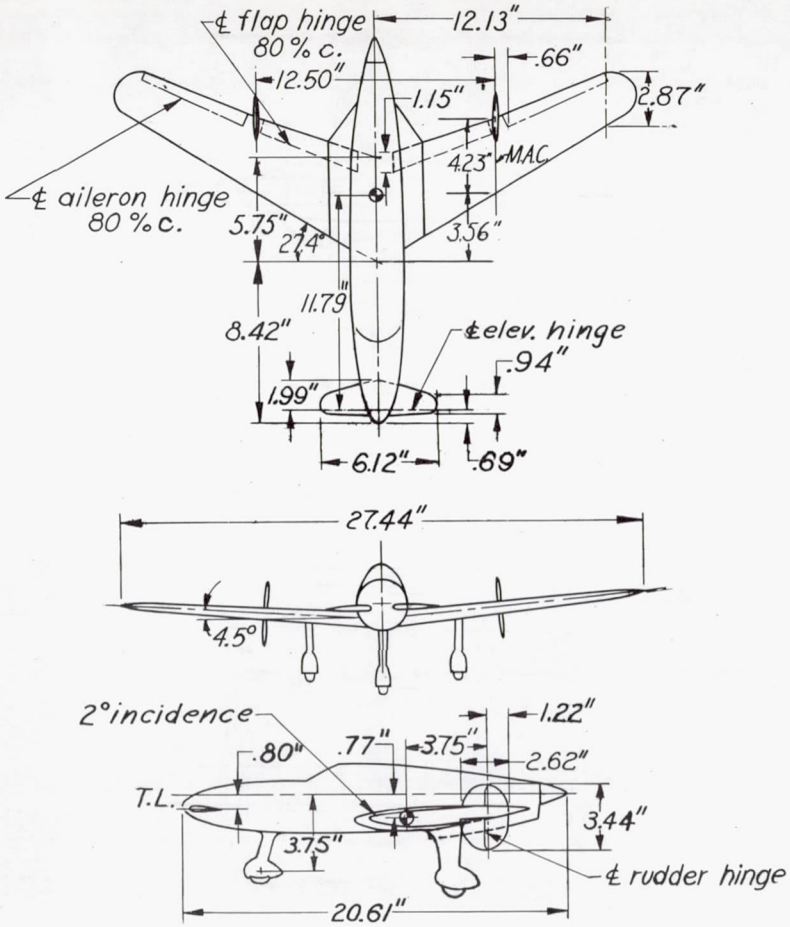

(k) Model 11.

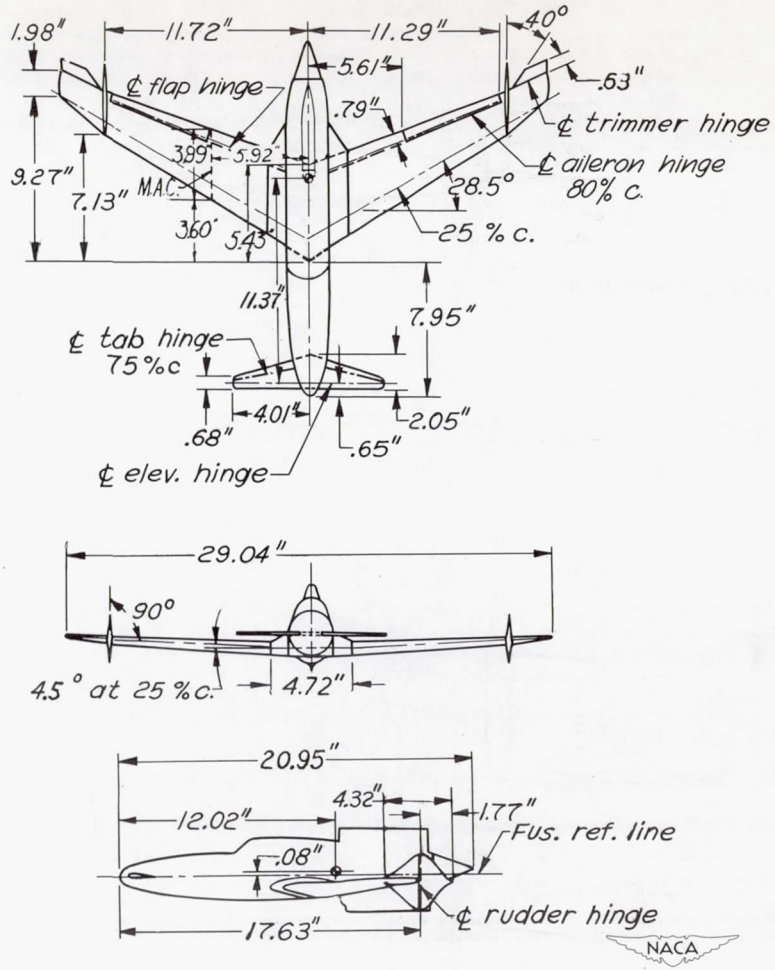

(l) Model 12.

Figure 1.- Concluded.

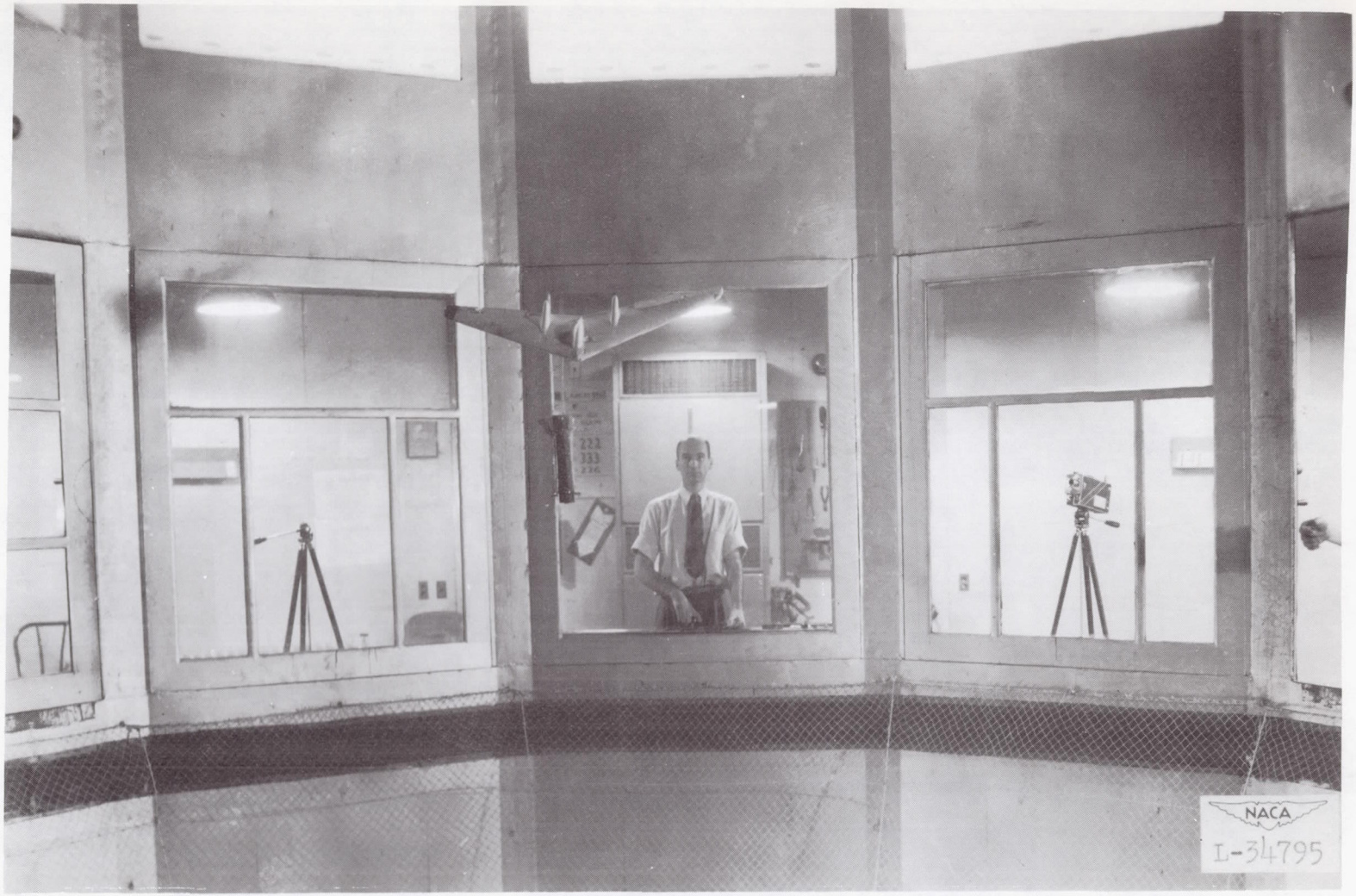

Figure 2.- Photograph of model 2 spinning in the Langley 20-foot free-spinning tunnel.

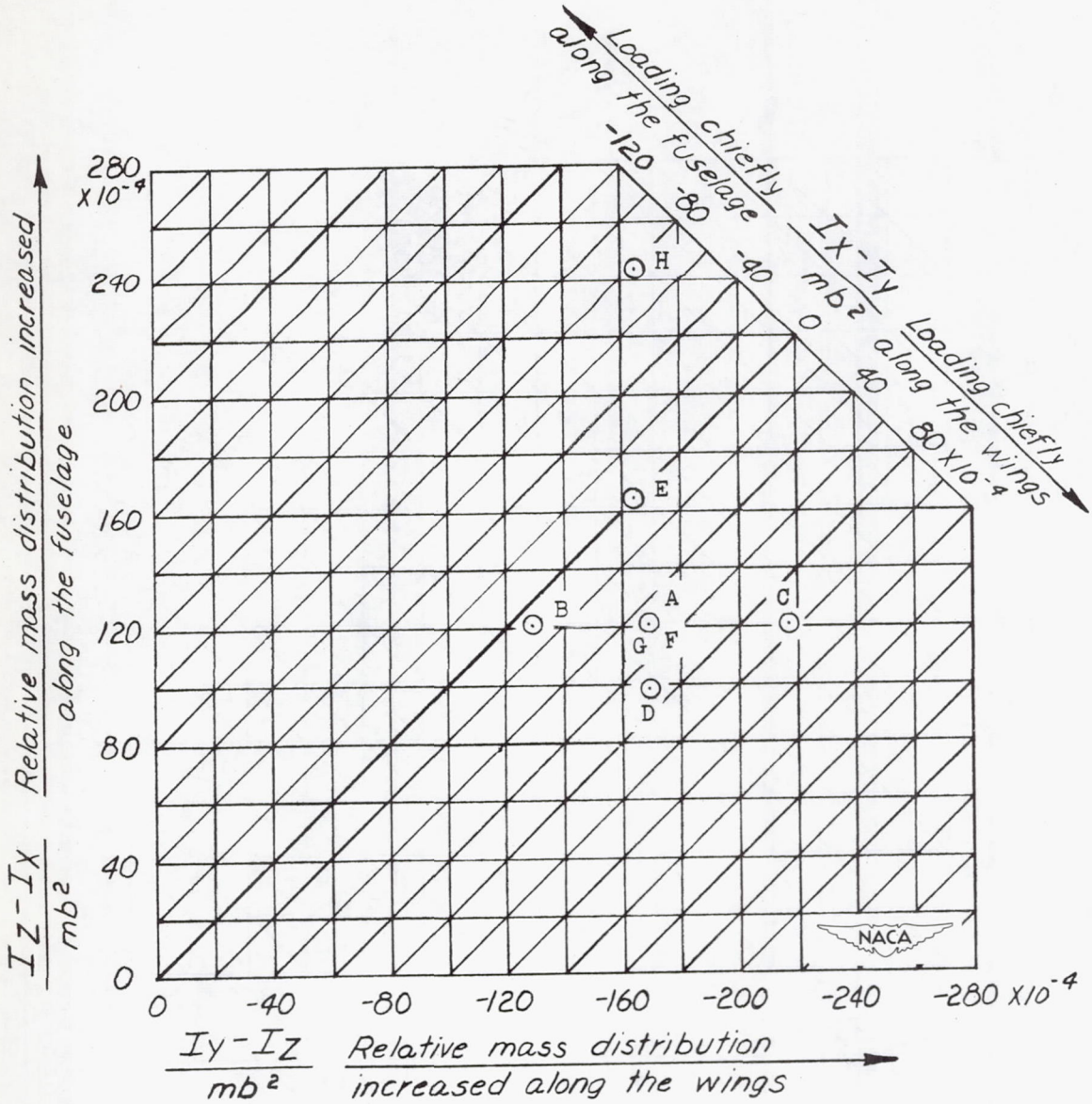

(a) Model 1.

Figure 3.- Mass parameters for loadings tested on models. (Loadings found in table II.)

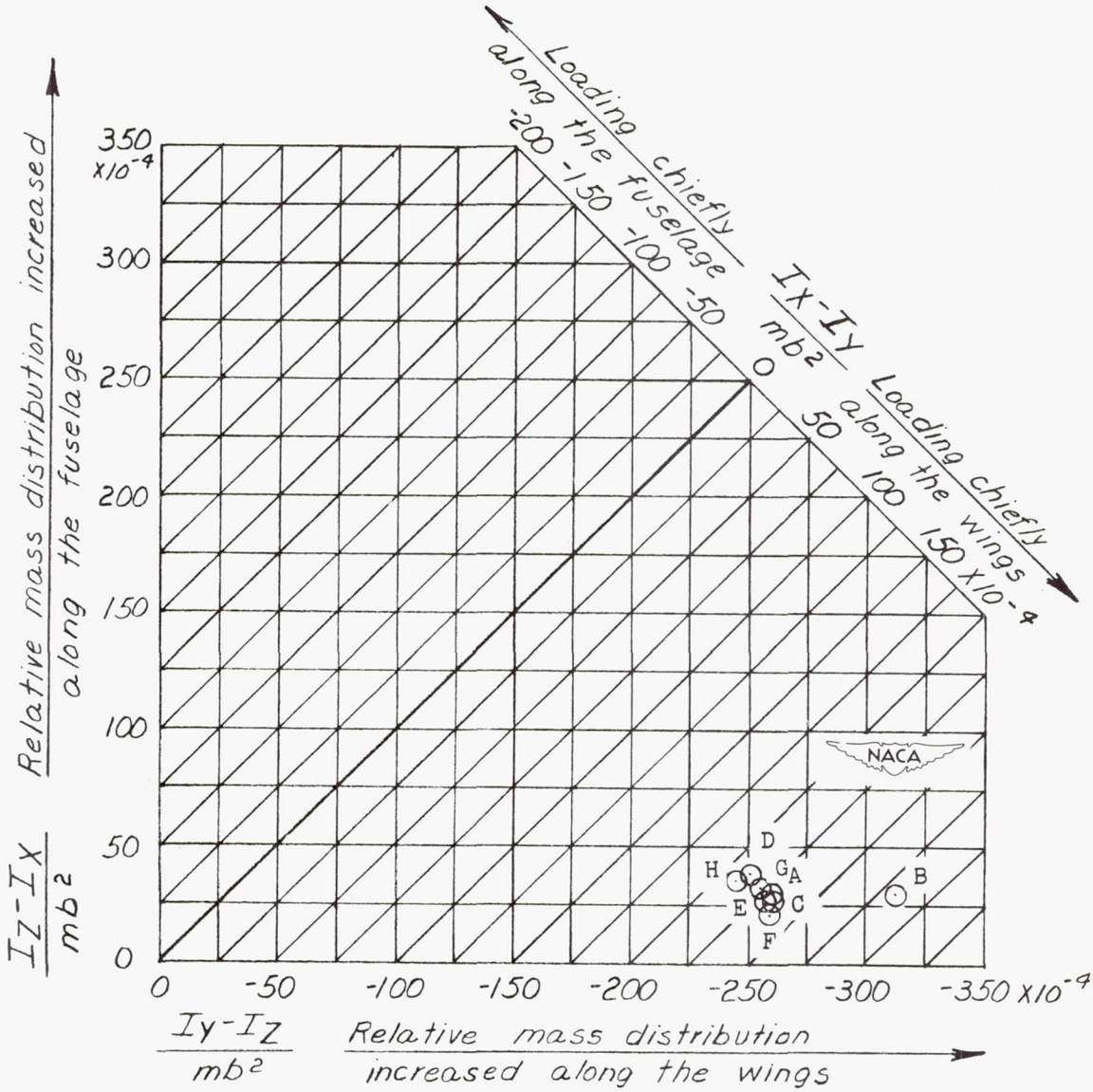

(b) Model 2.

Figure 3.- Continued.

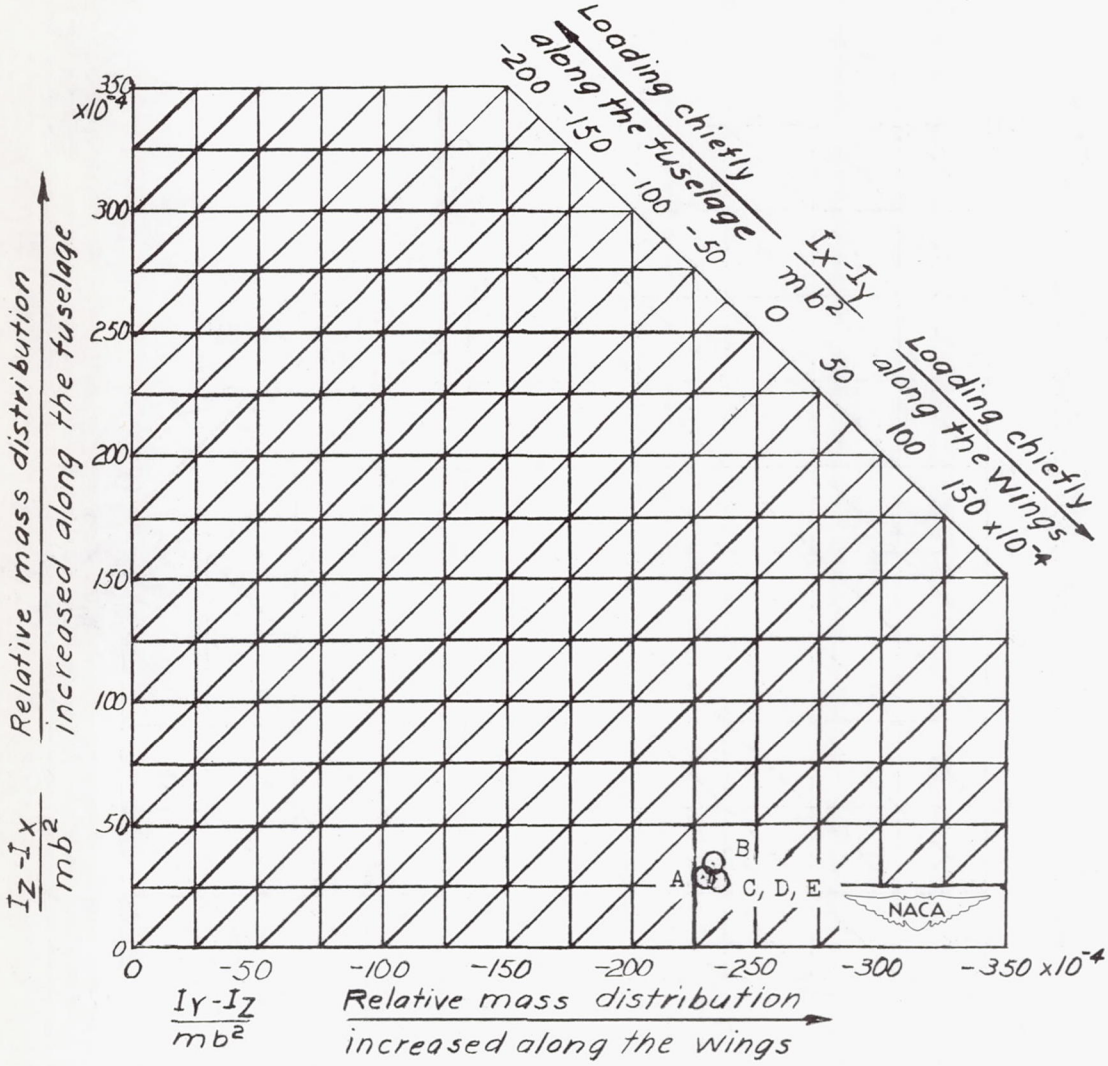

(c) Model 3.

Figure 3.- Continued.

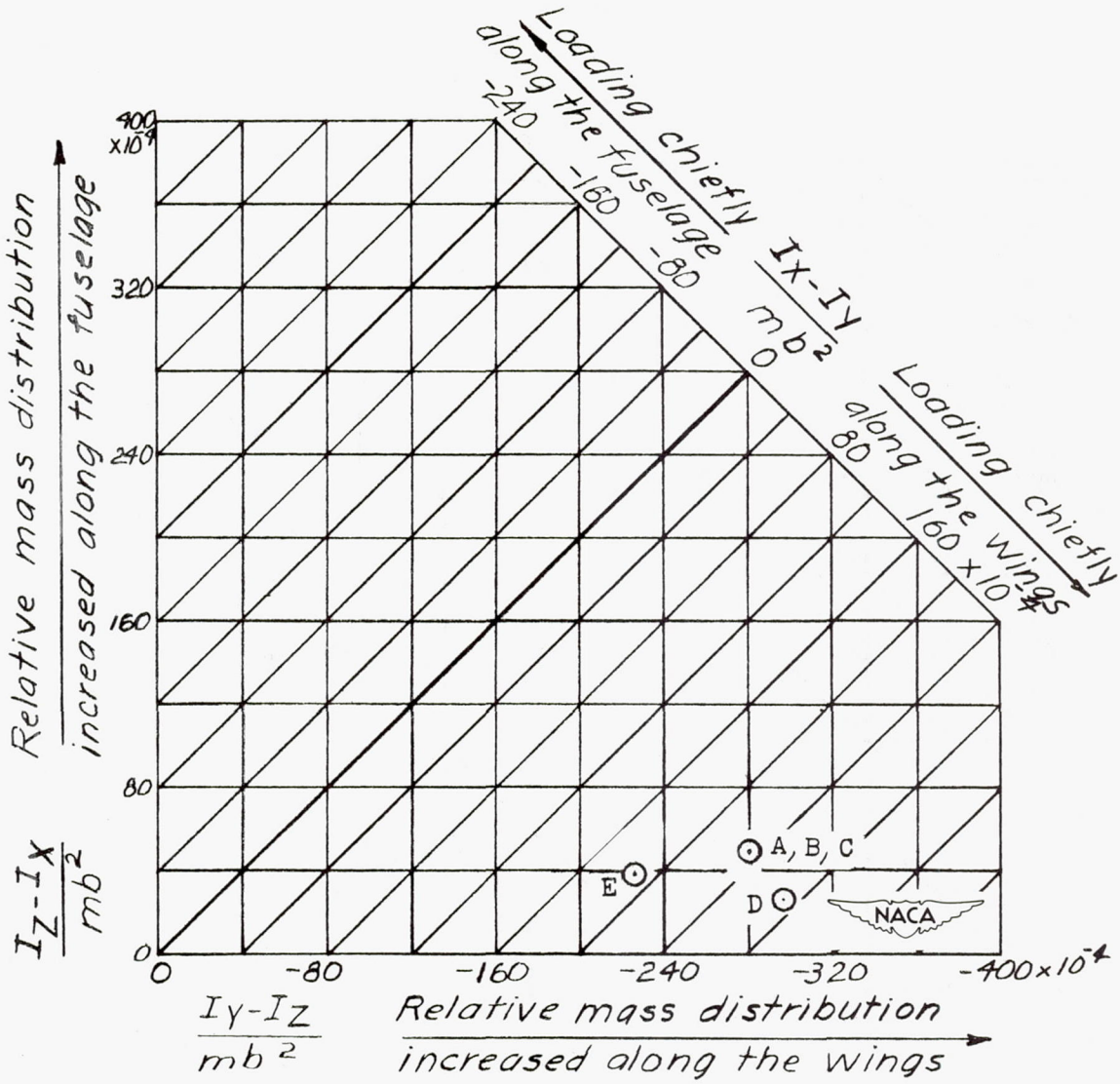

(d) Model 4.

Figure 3.- Continued.

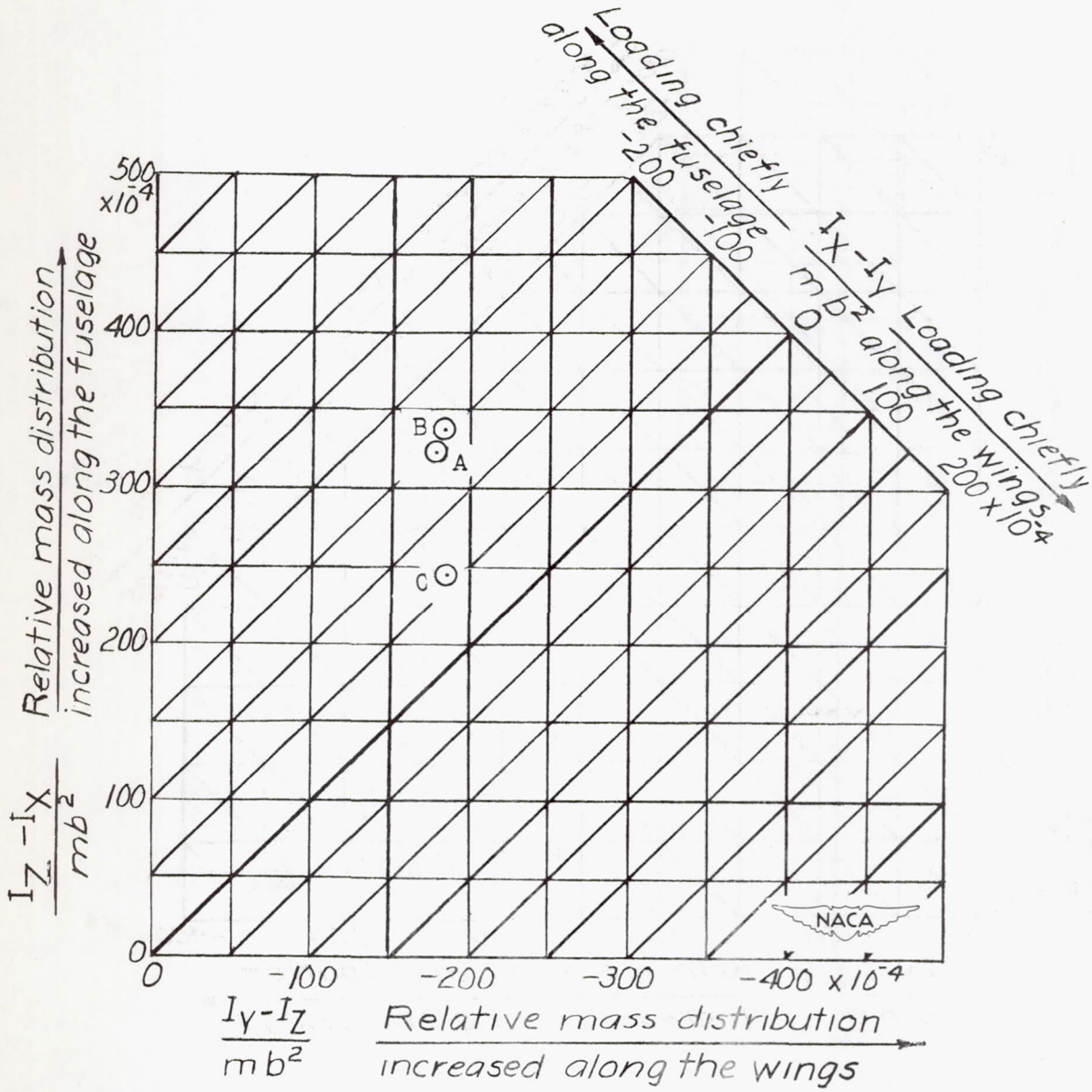

(e) Model 5.

Figure 3.- Continued.

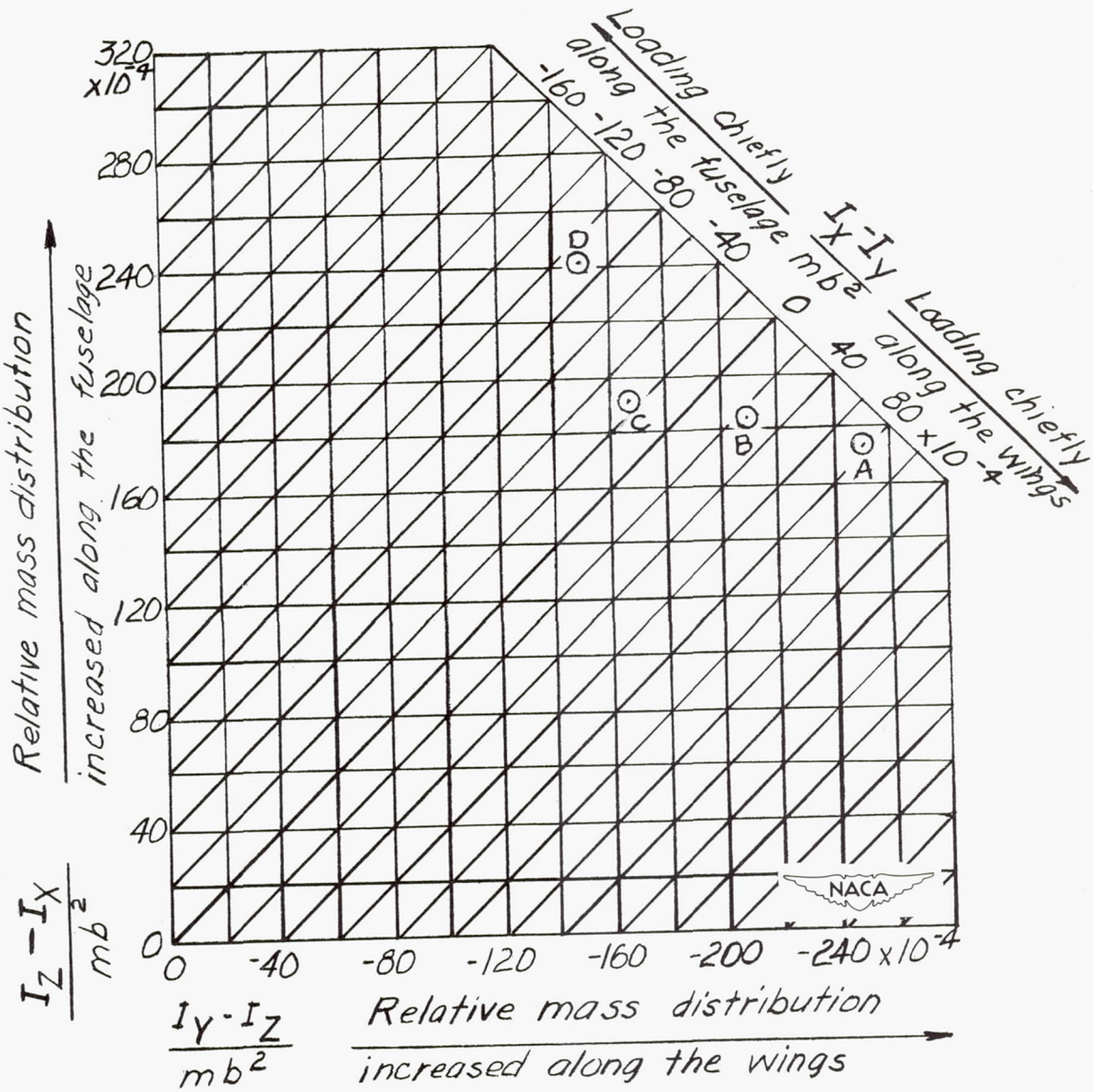

(f) Model 6.

Figure 3.- Continued.

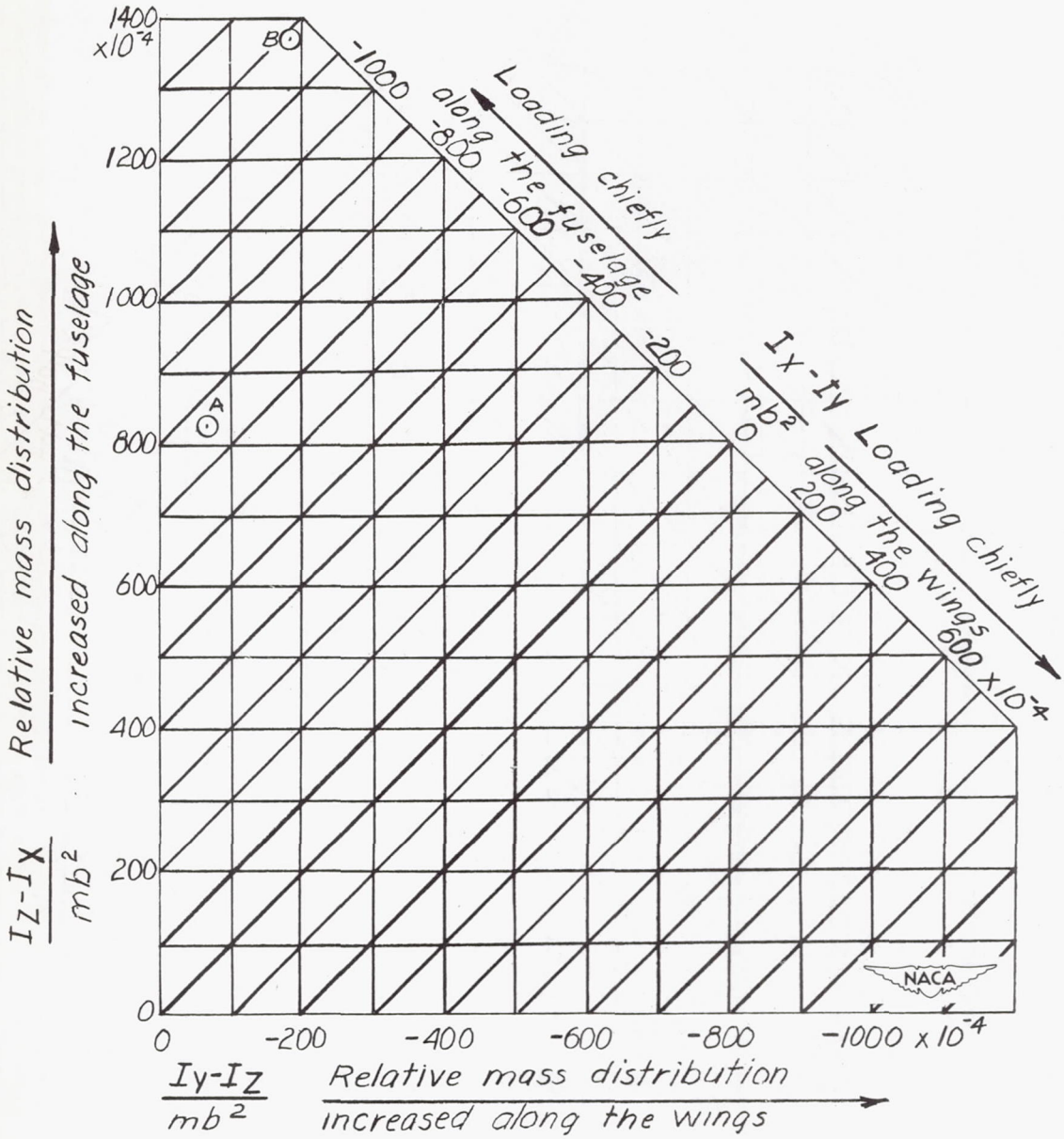

(g) Model 7.

Figure 3.- Continued.

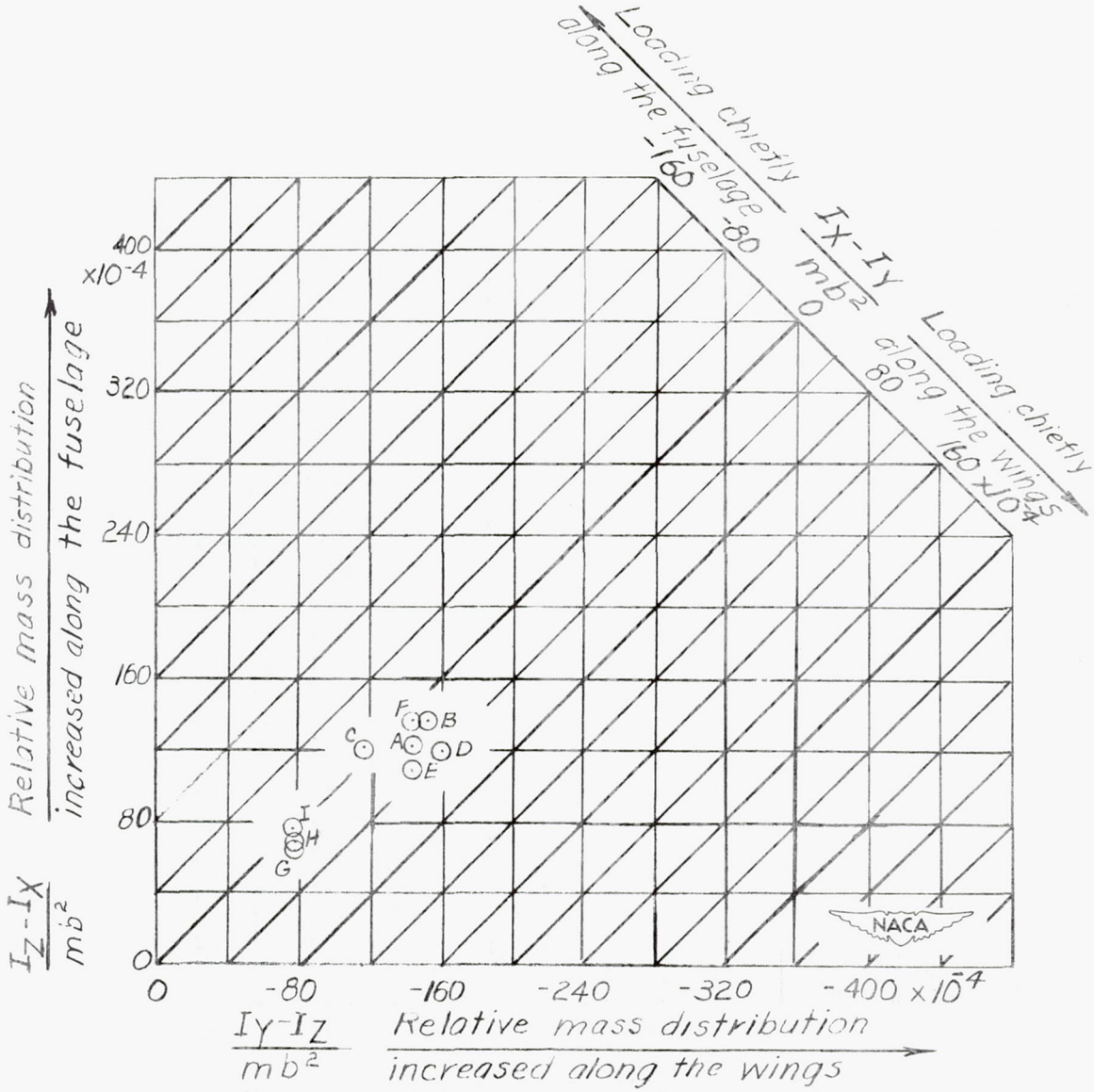

(h) Model 8.

Figure 3.- Continued.

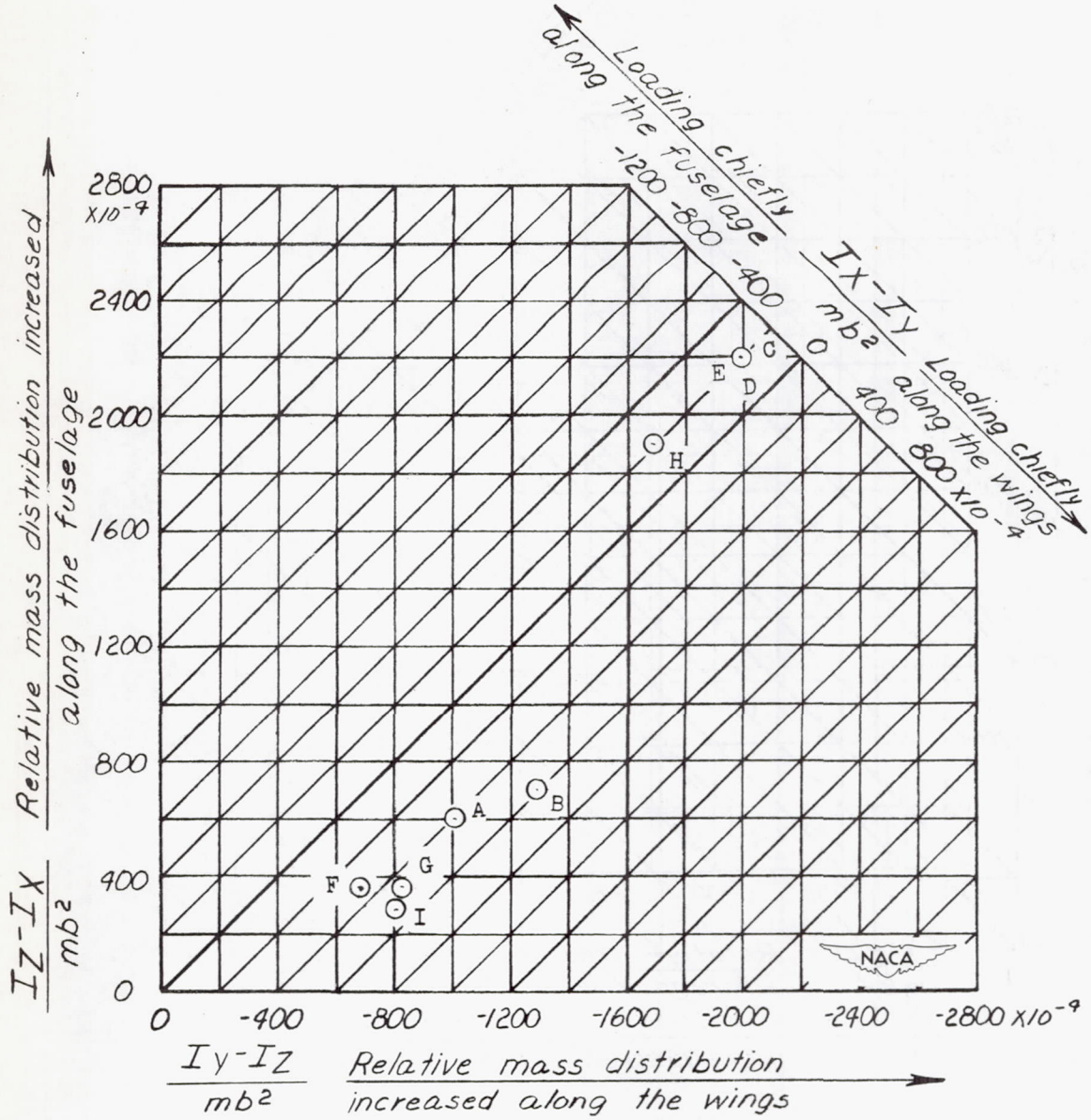

(i) Model 9.

Figure 3.- Continued.

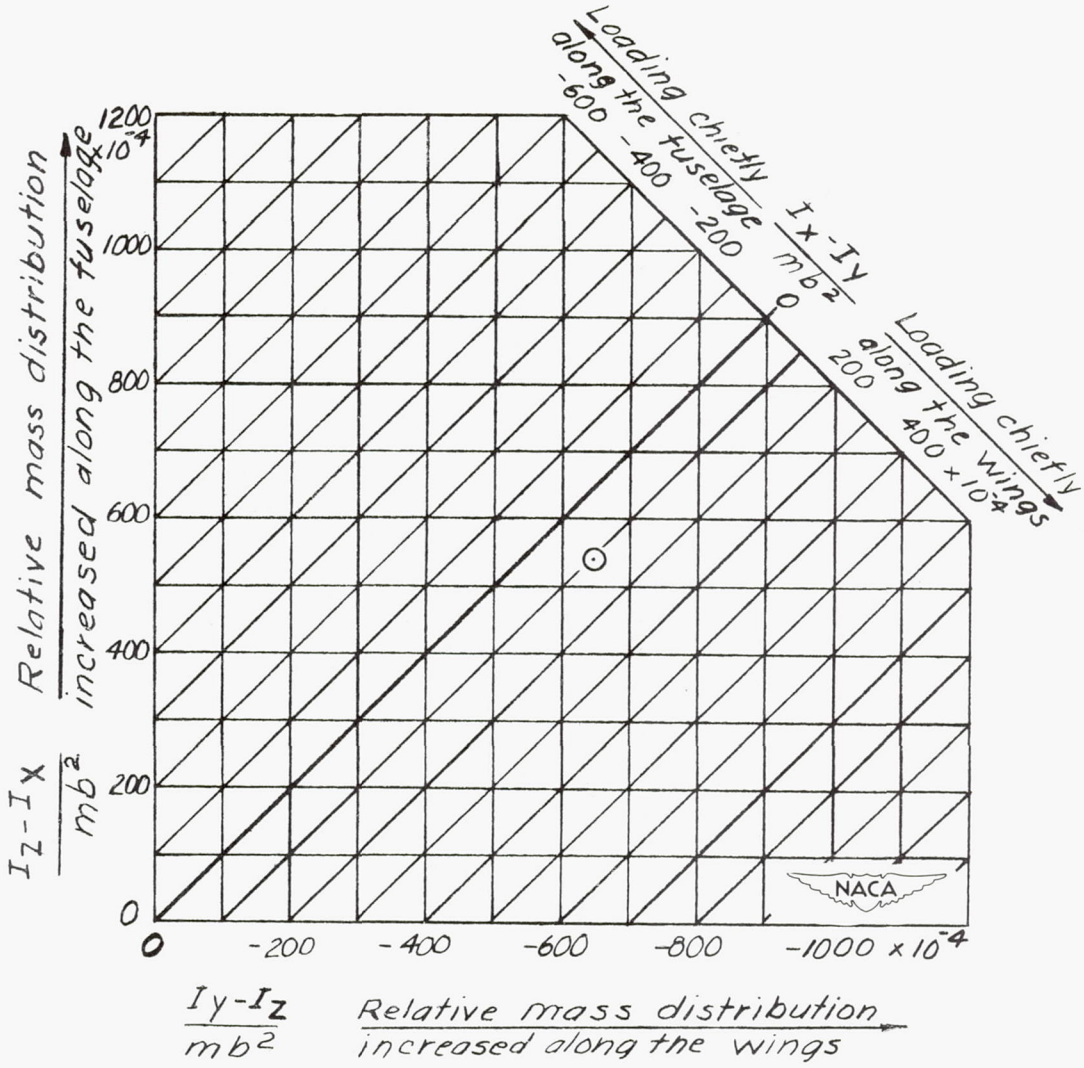

(j) Model 10.

Figure 3.- Continued.

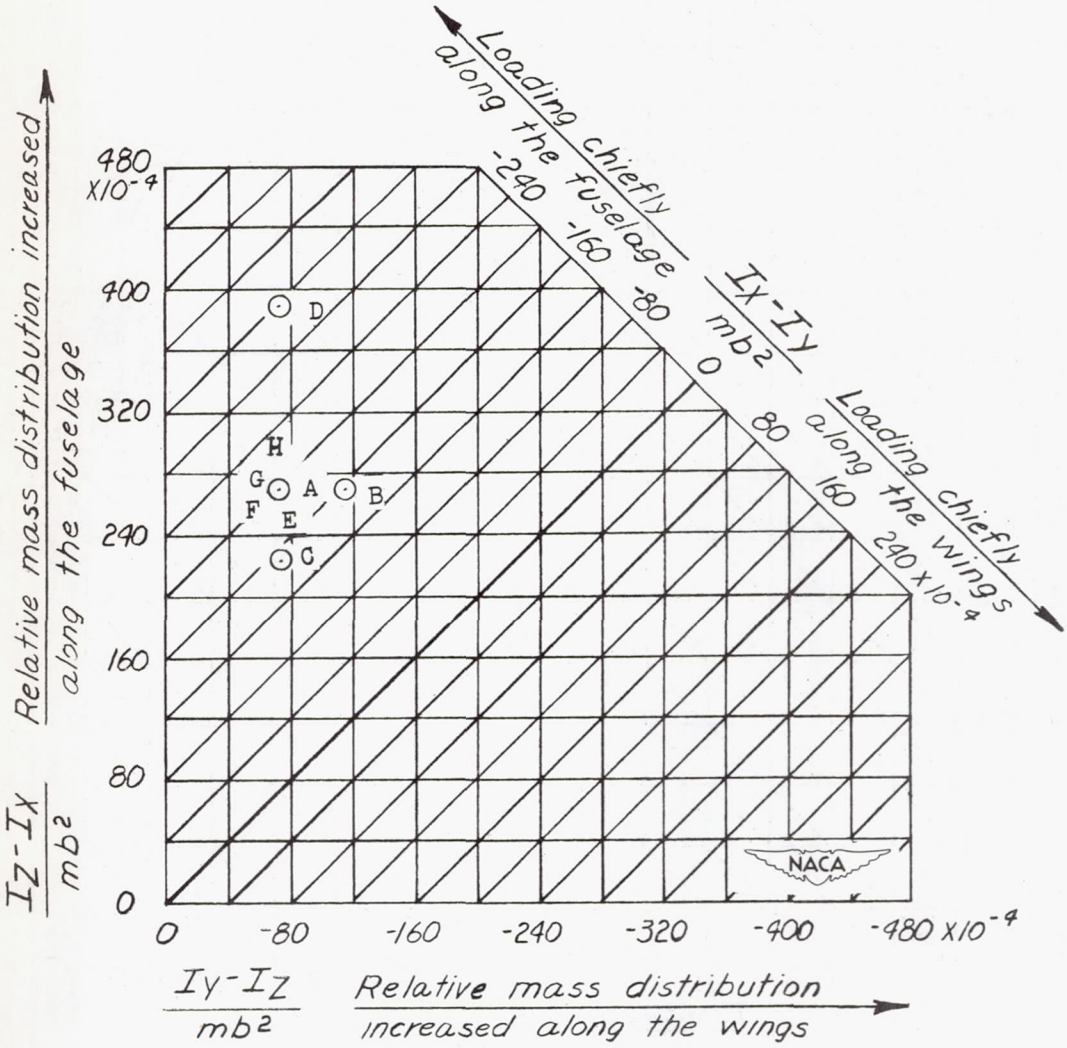

(k) Model 11.

Figure 3.- Continued.

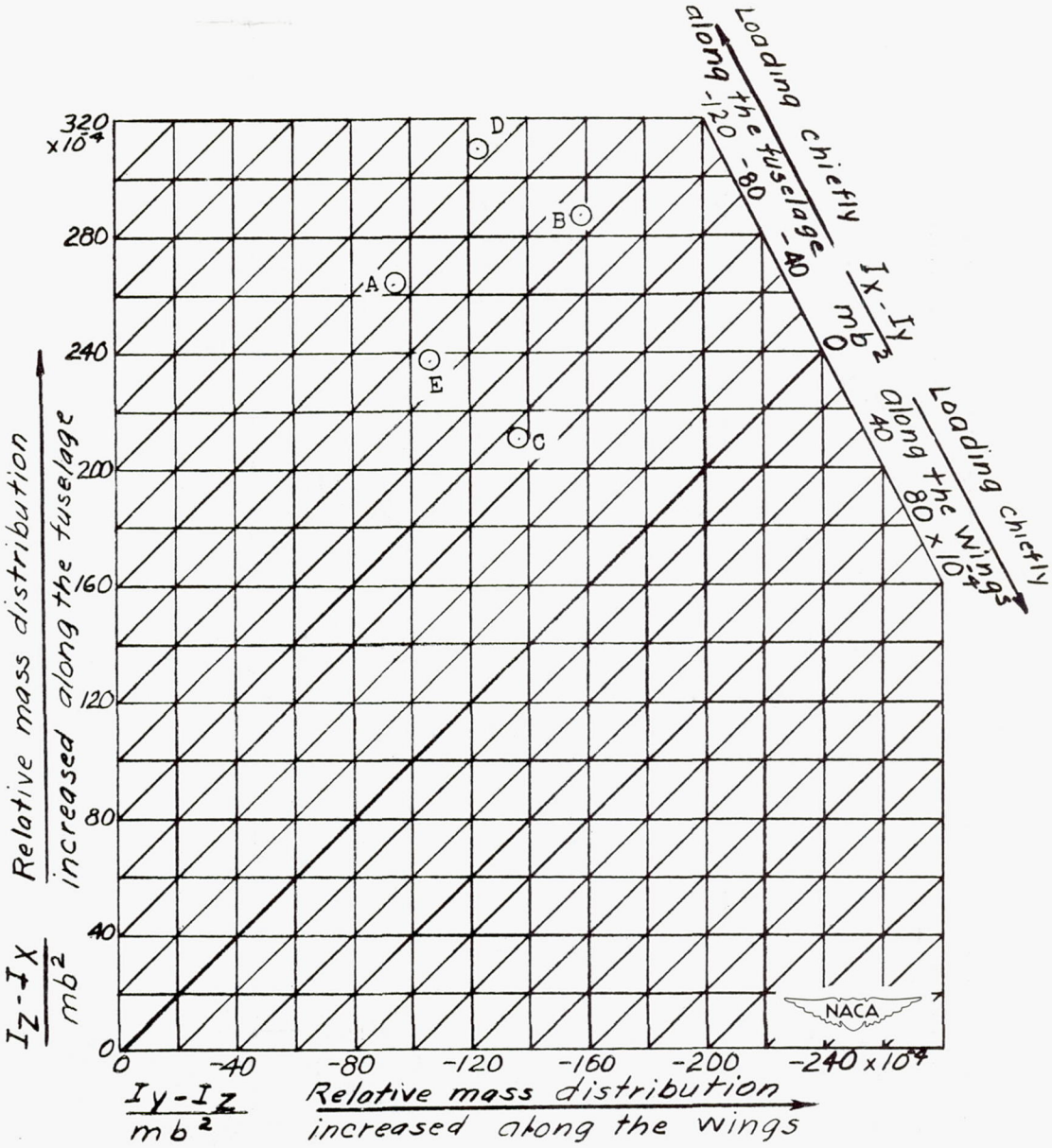

(*l*) Model 12.

Figure 3.- Concluded.

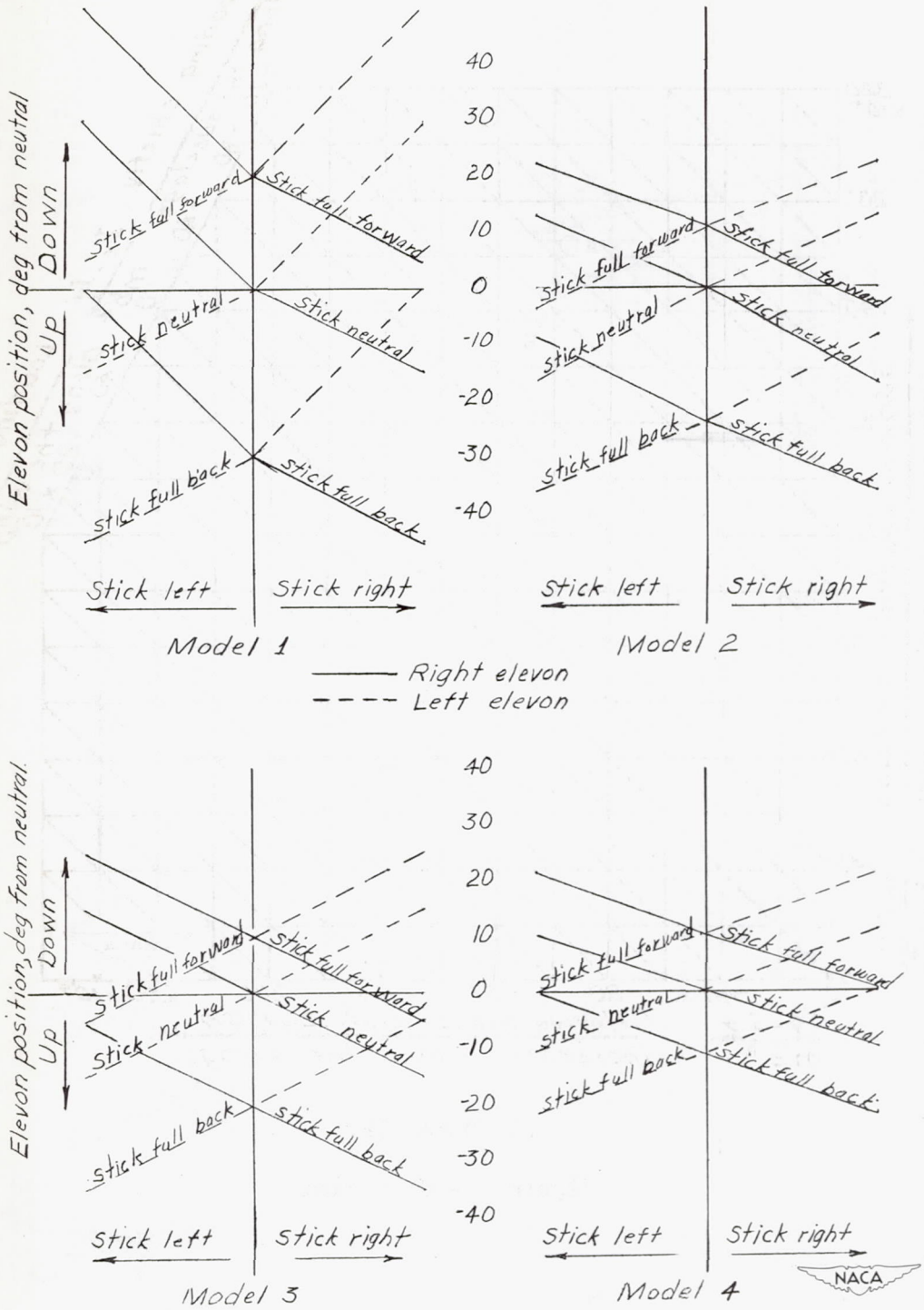

Figure 4.- Combination elevator-aileron (elevon) deflections for the models tested.

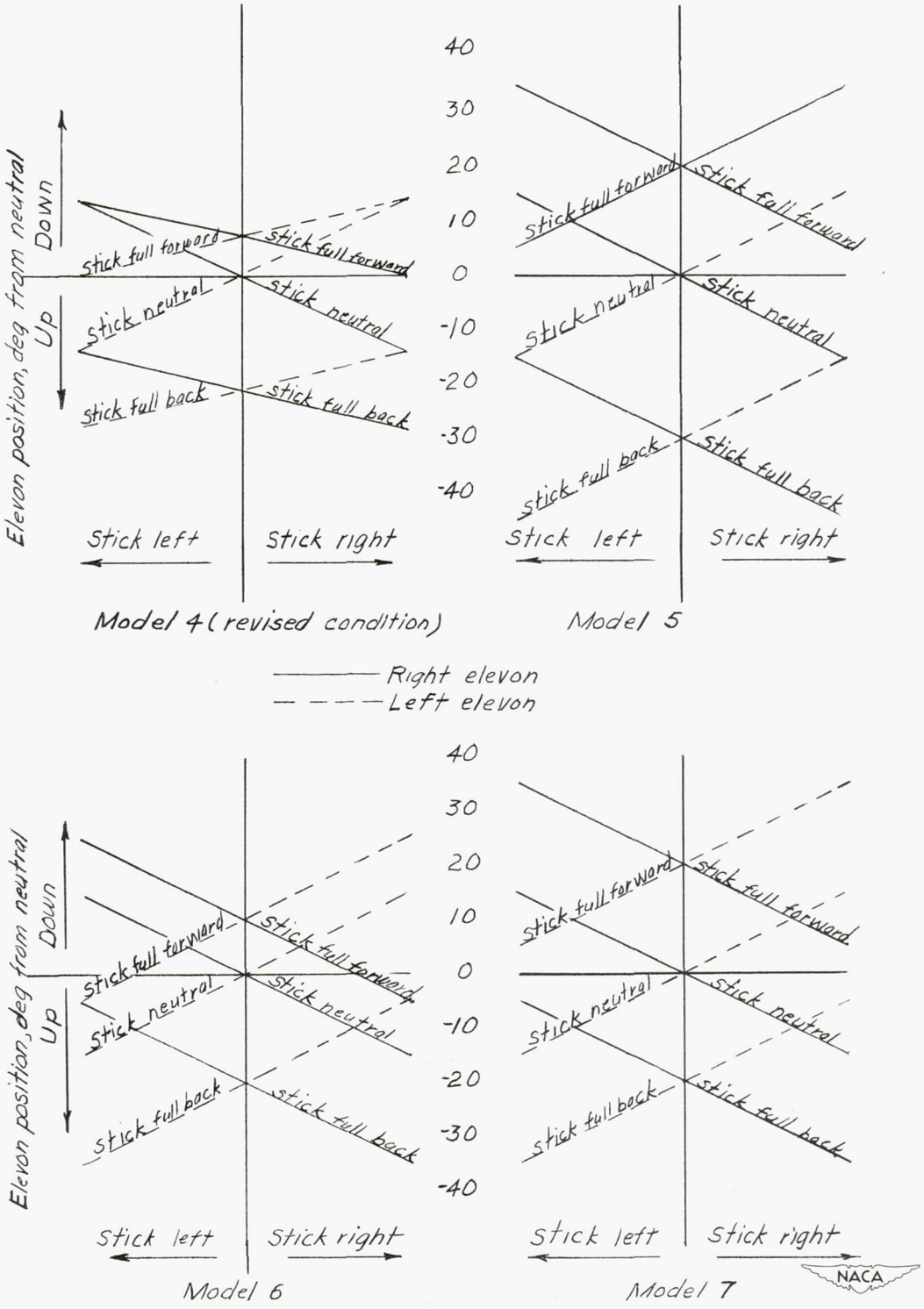

Figure 4.- Continued.

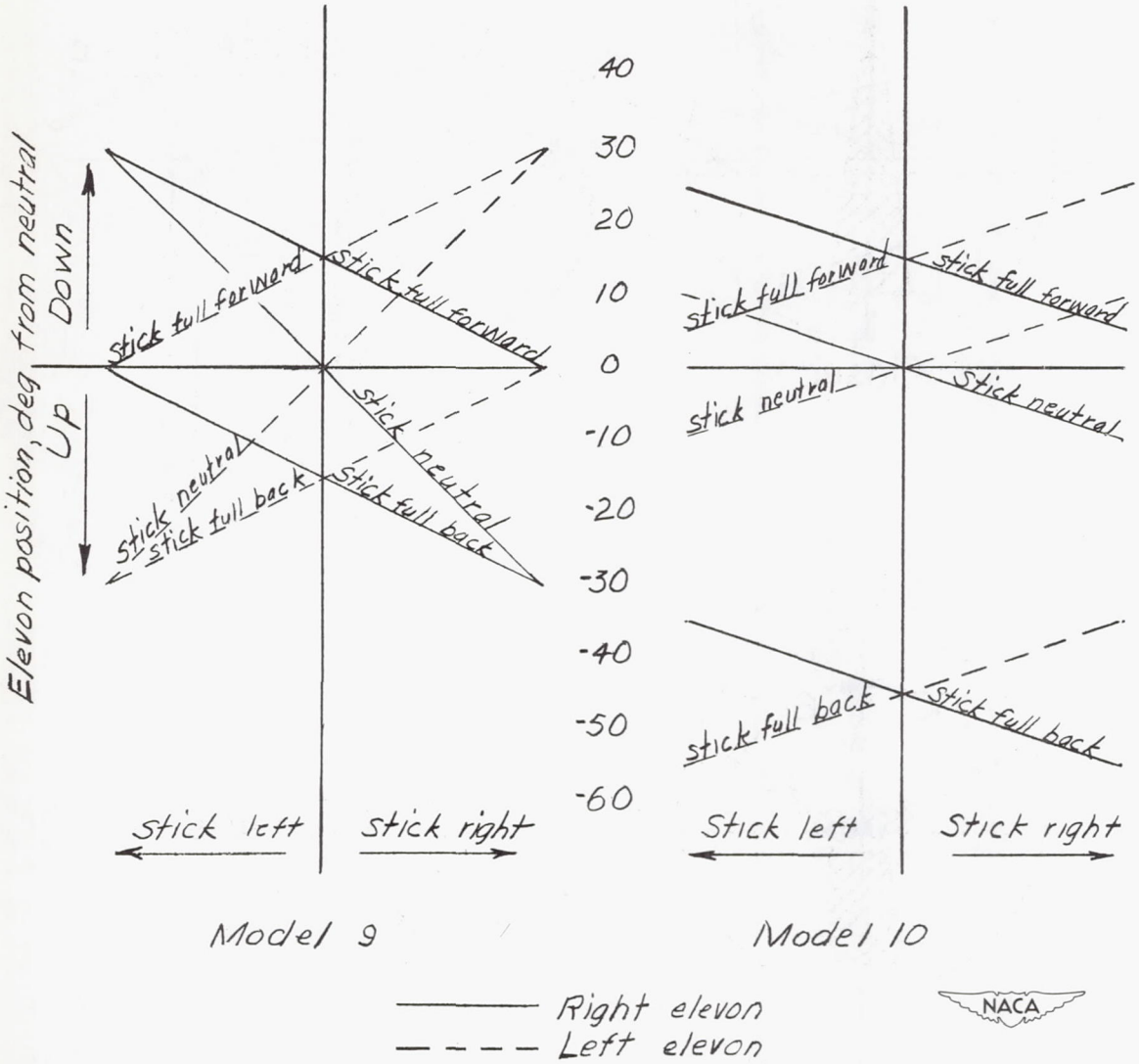

Figure 4.- Concluded.

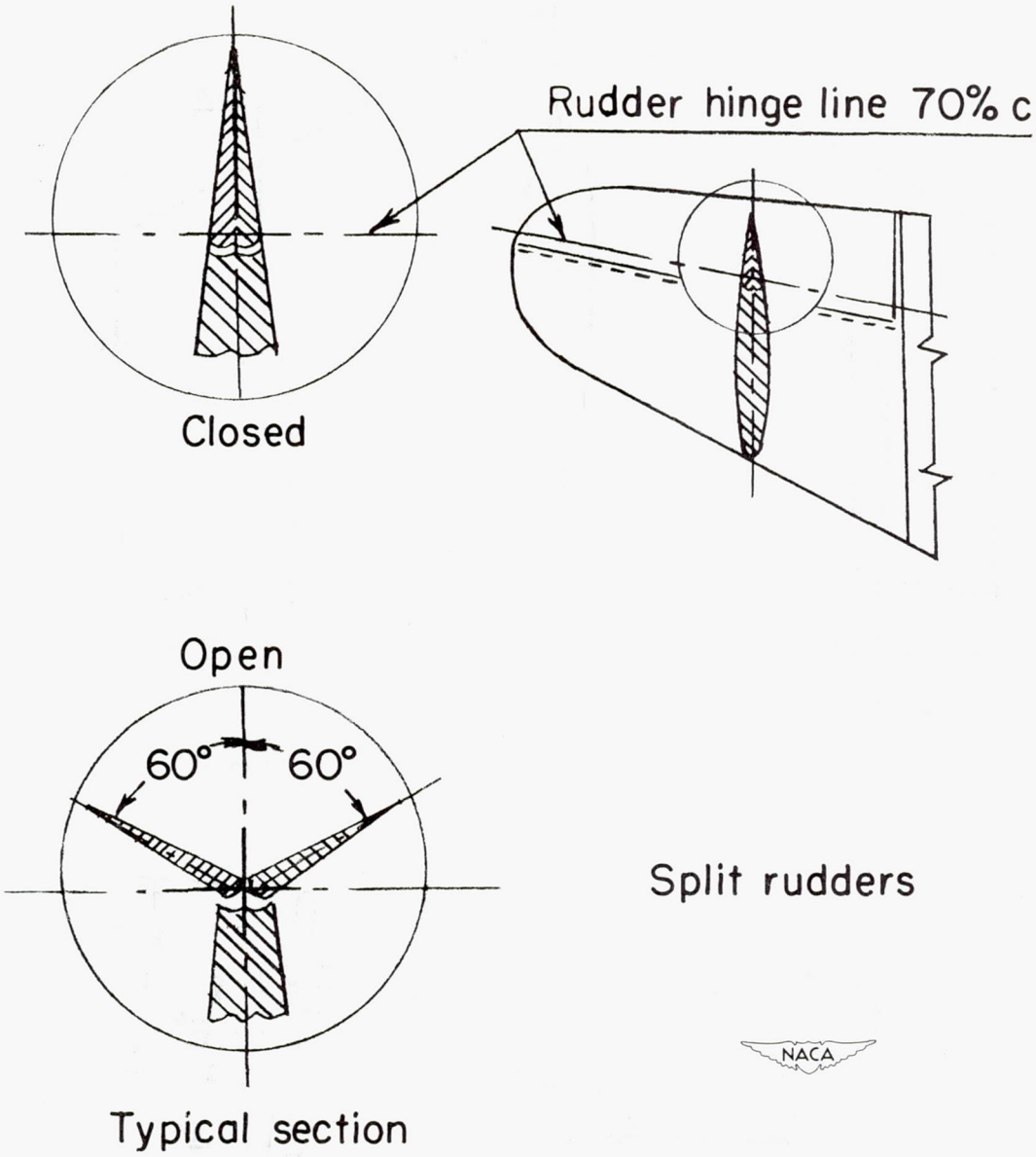

(a) Model 1.

Figure 5.- Modifications tested on models.

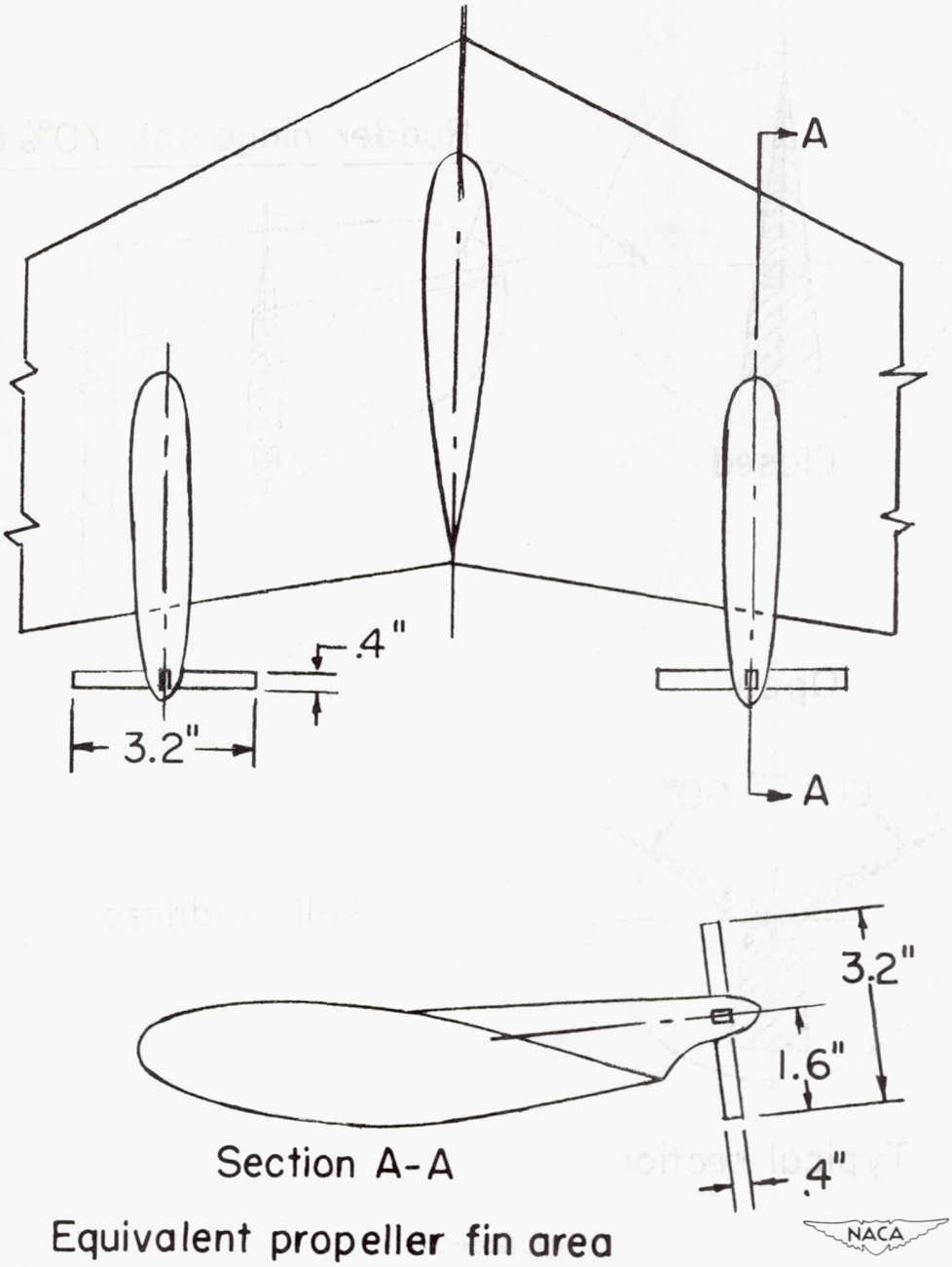

(b) Model 2.

Figure 5.- Continued.

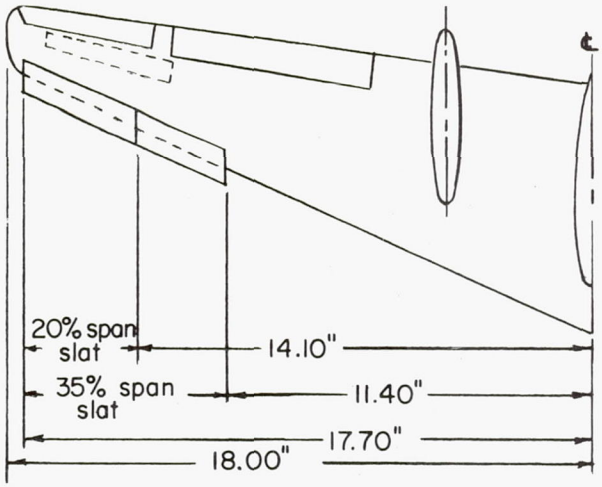

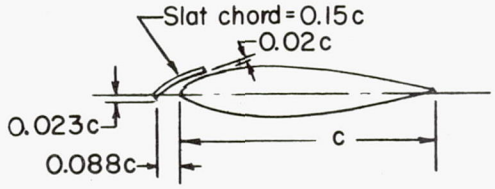

20% and 35% semispan slats

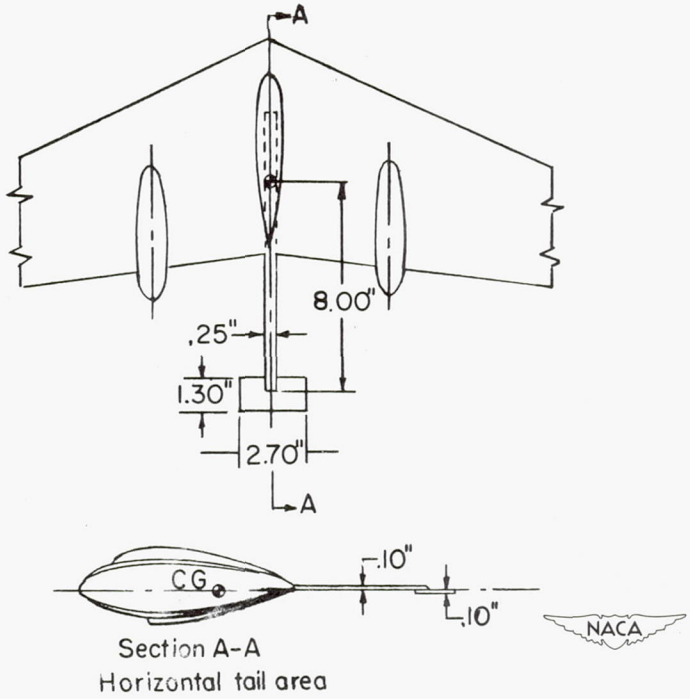

Section A-A
Horizontal tail area

(b) Concluded.

Figure 5.- Continued.

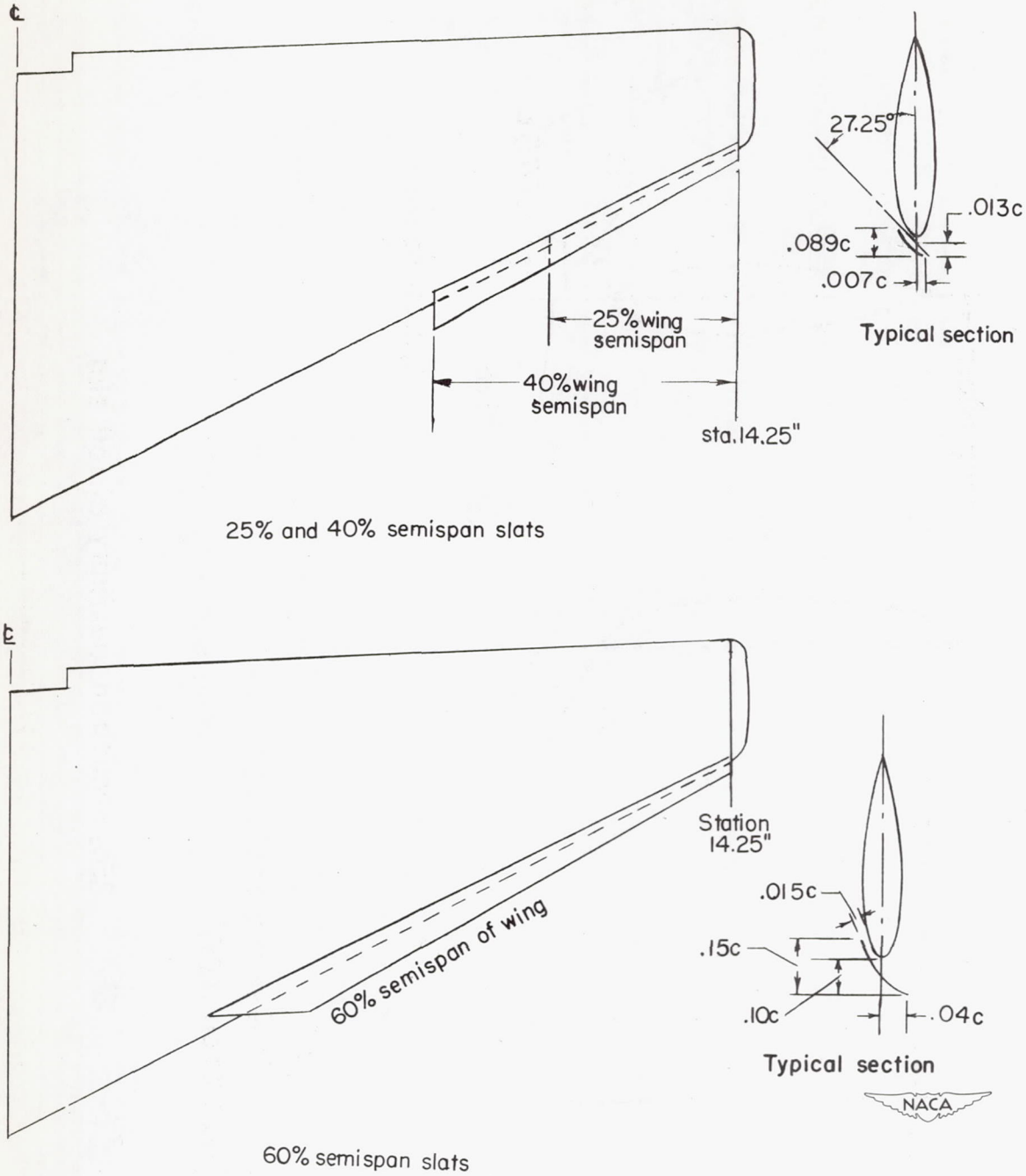

(c) Model 4.

Figure 5.- Continued.

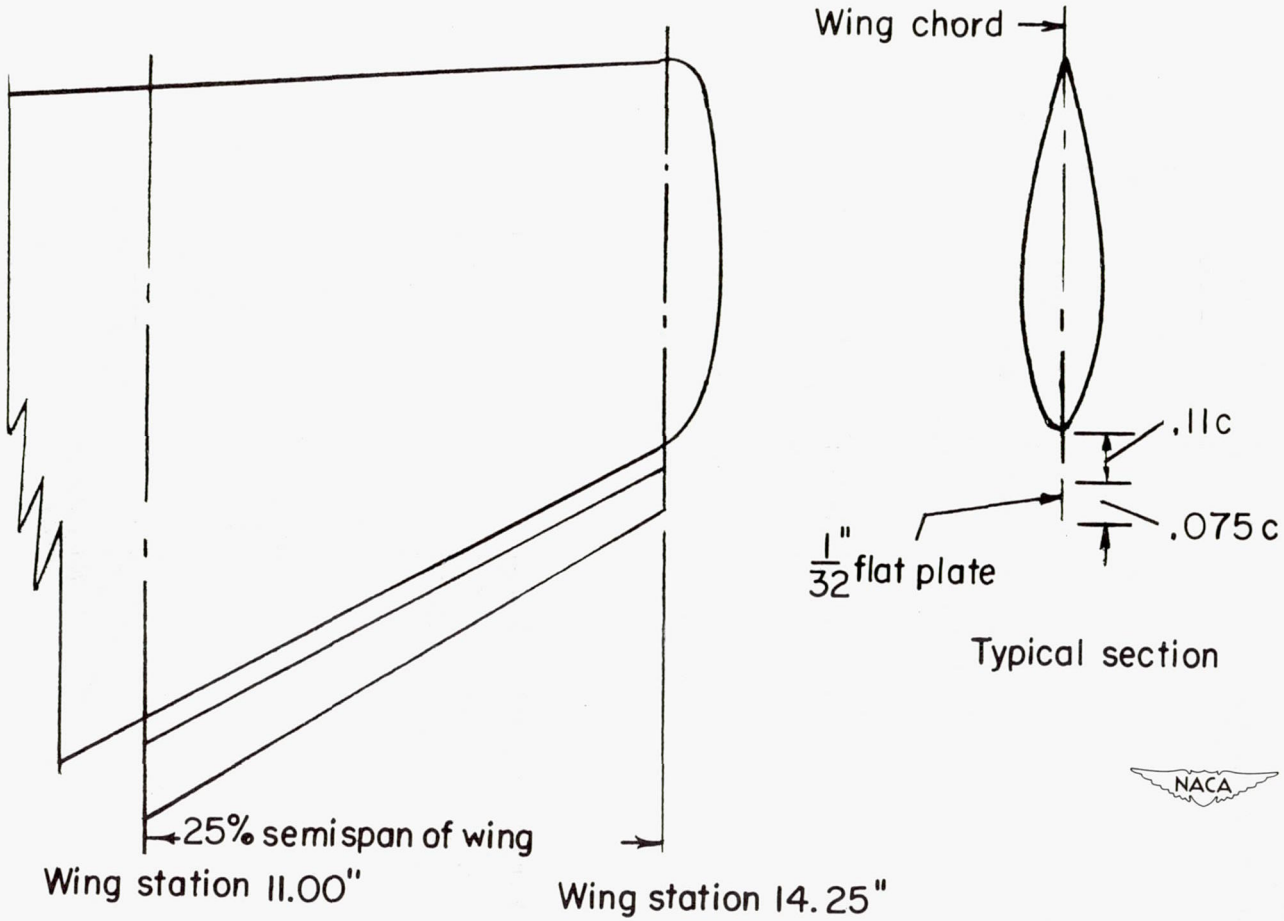

25% semispan auxiliary airfoil slat

(c) Continued.

Figure 5.- Continued.

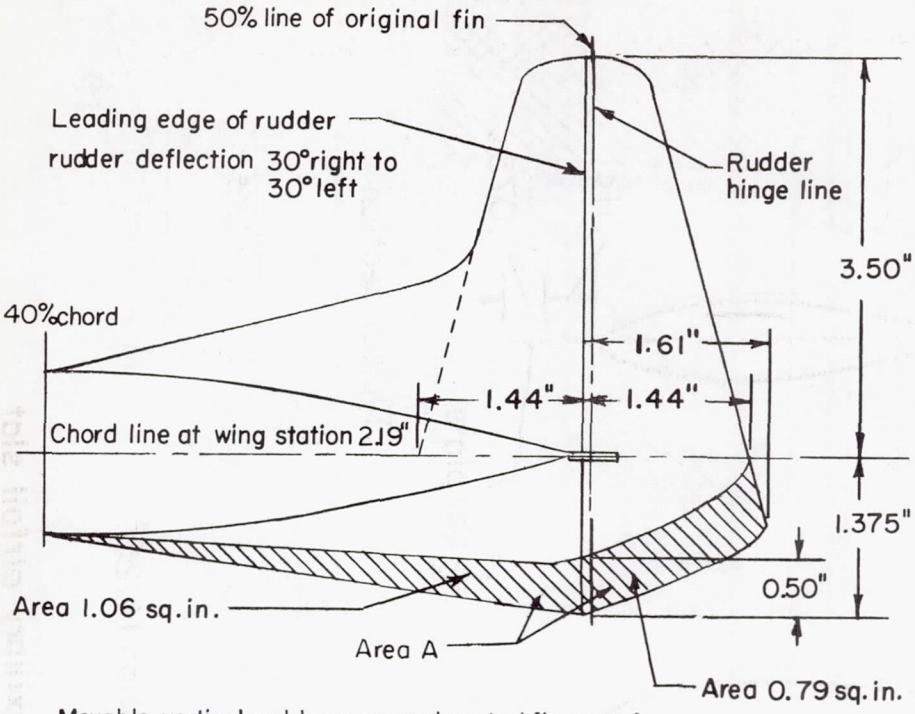

Movable vertical rudder area and ventral fin area A

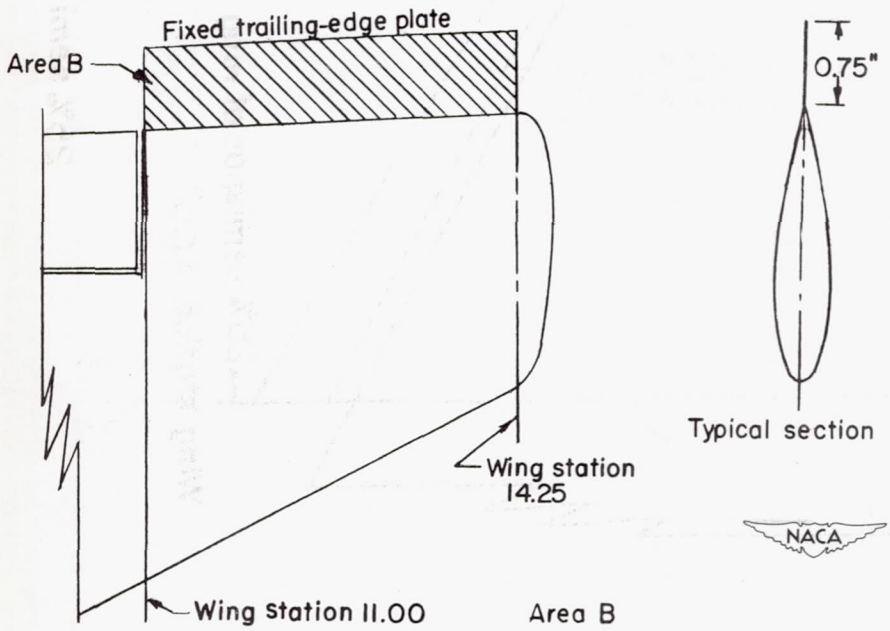

(c) Continued.

Figure 5.- Continued.

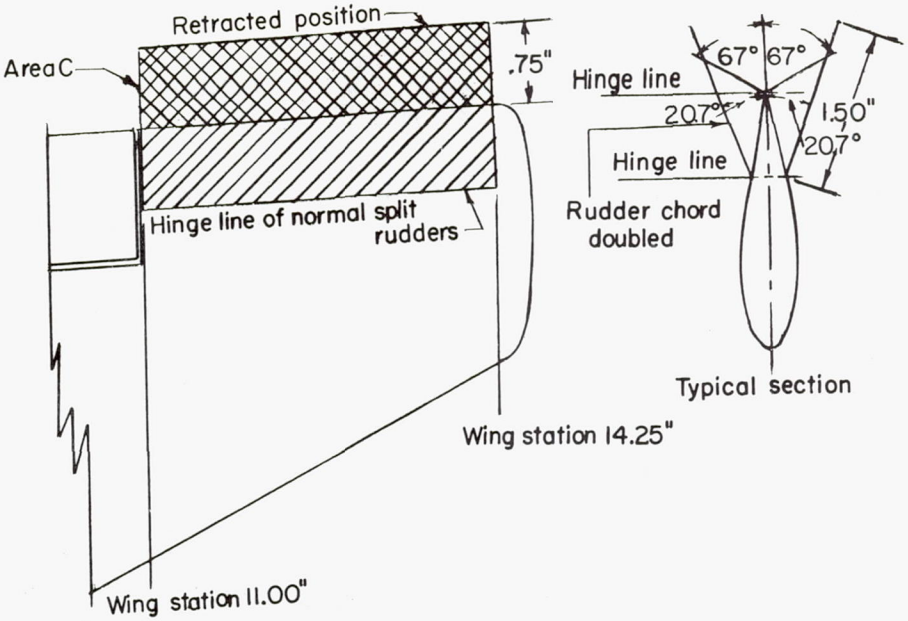

Area C and hinge line moved to trailing edge

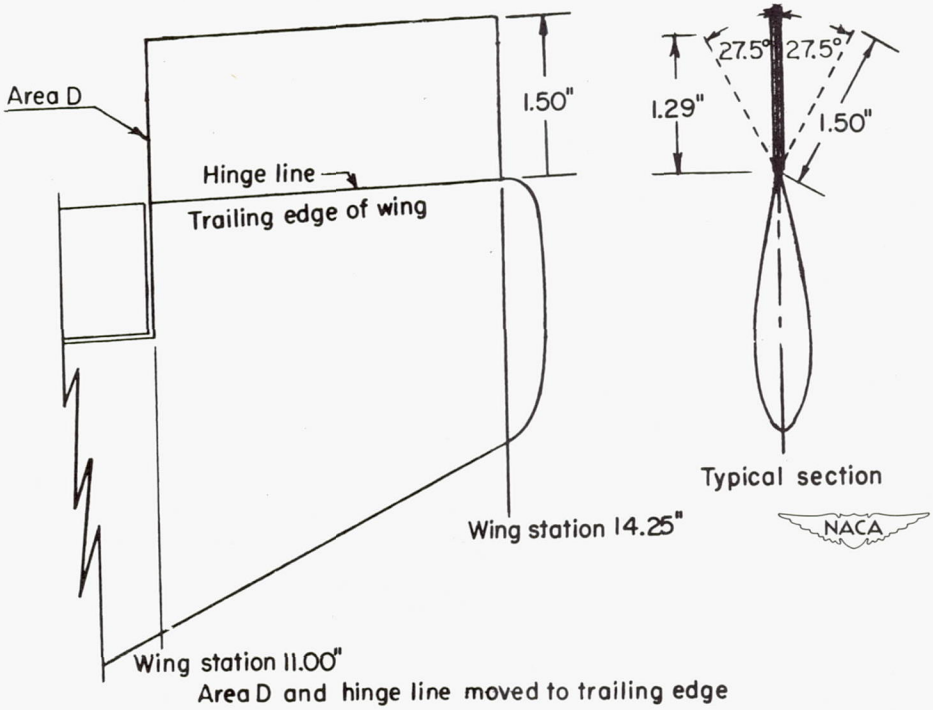

Area D and hinge line moved to trailing edge

(c) Continued.

Figure 5.- Continued.

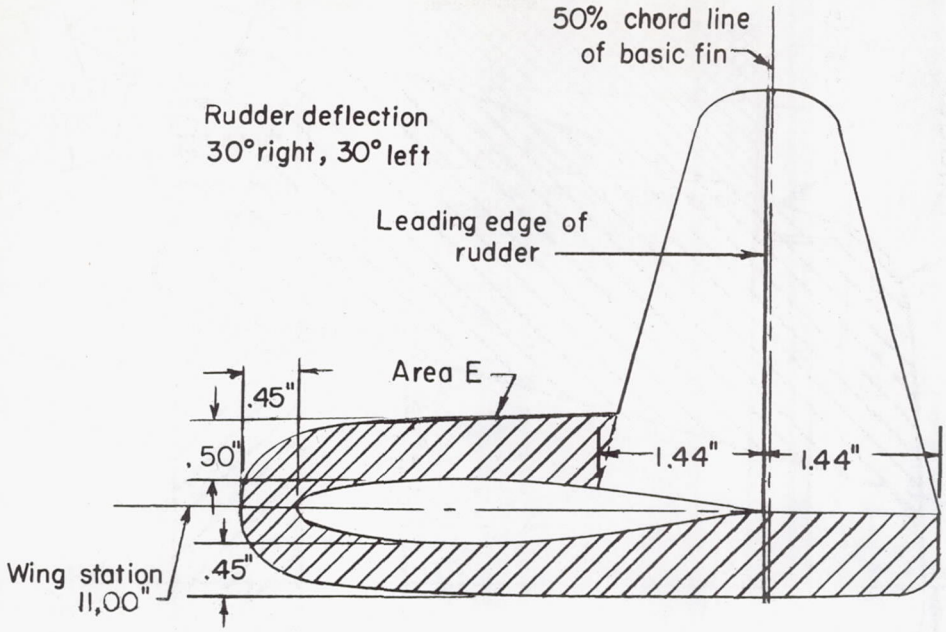

Area E

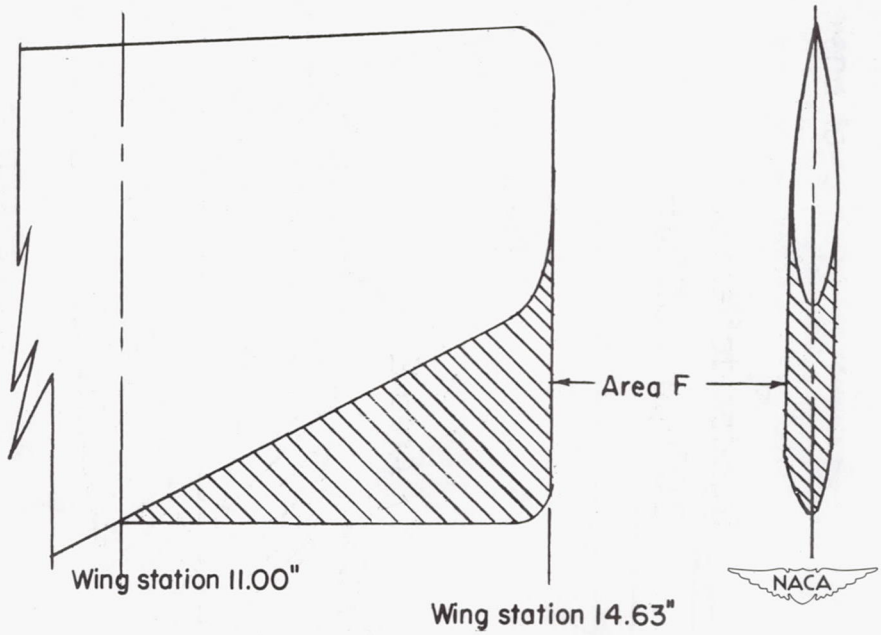

Area F

(c) Continued.

Figure 5.- Continued.

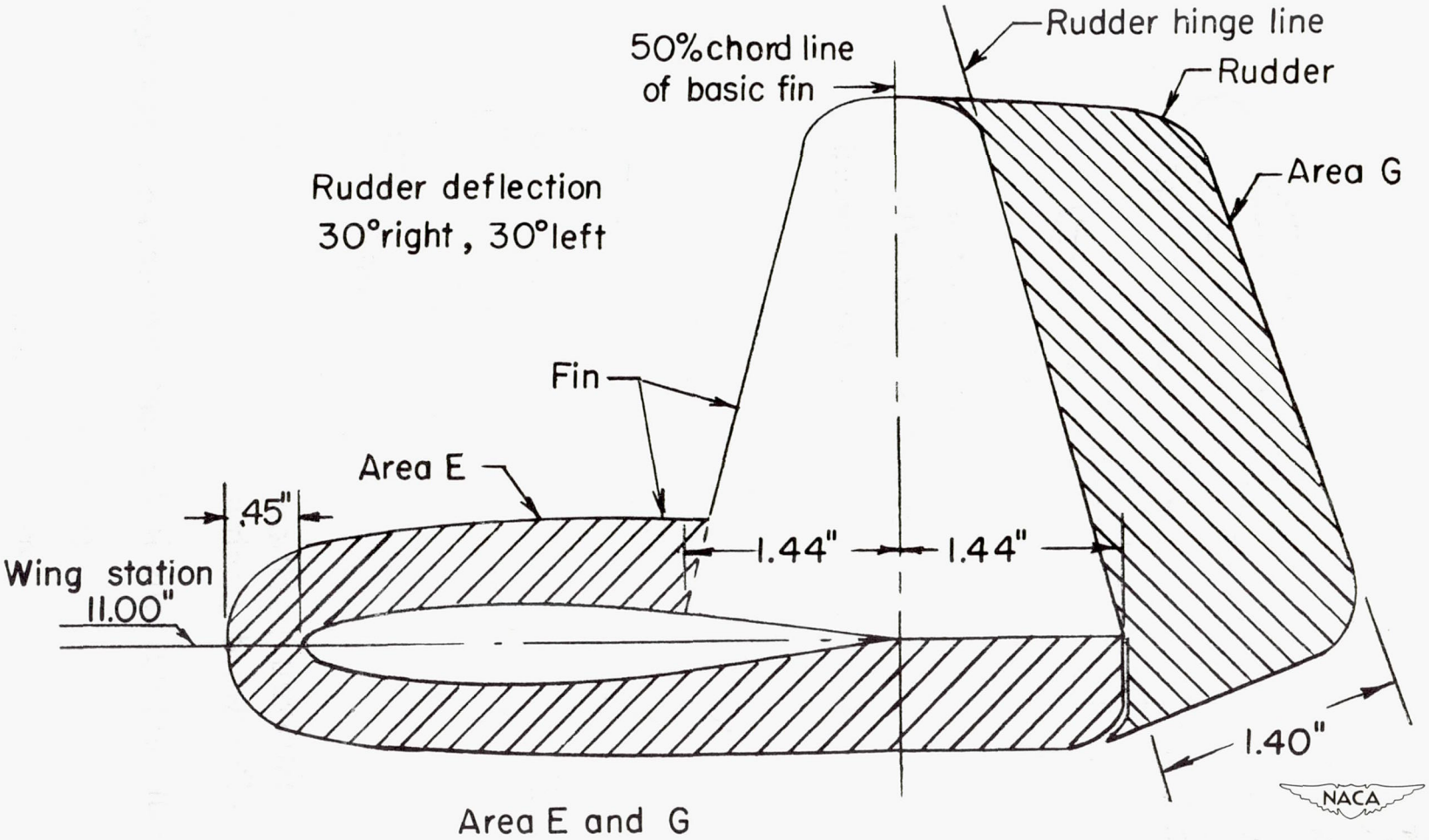

(c) Concluded.

Figure 5.- Continued.

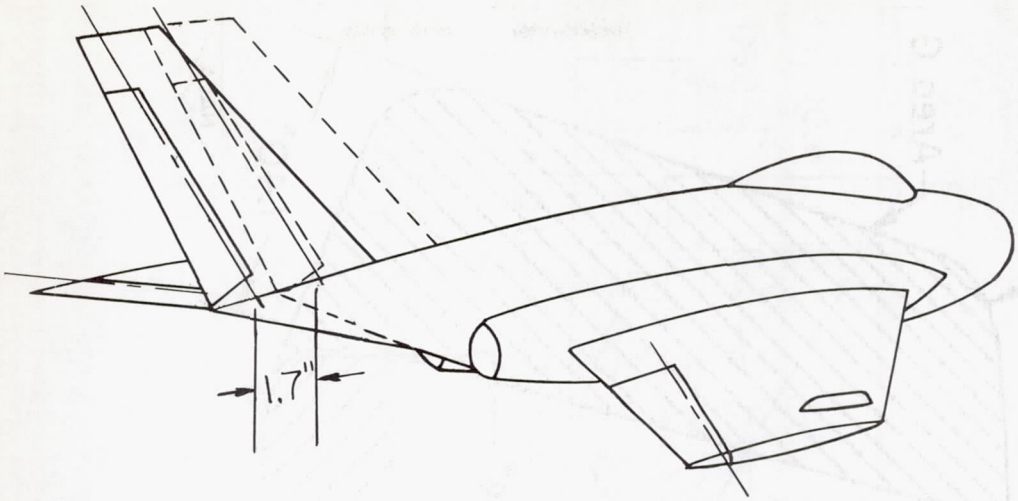

- - - - - - Original position
——— Rearward position

Single vertical tail moved rearward

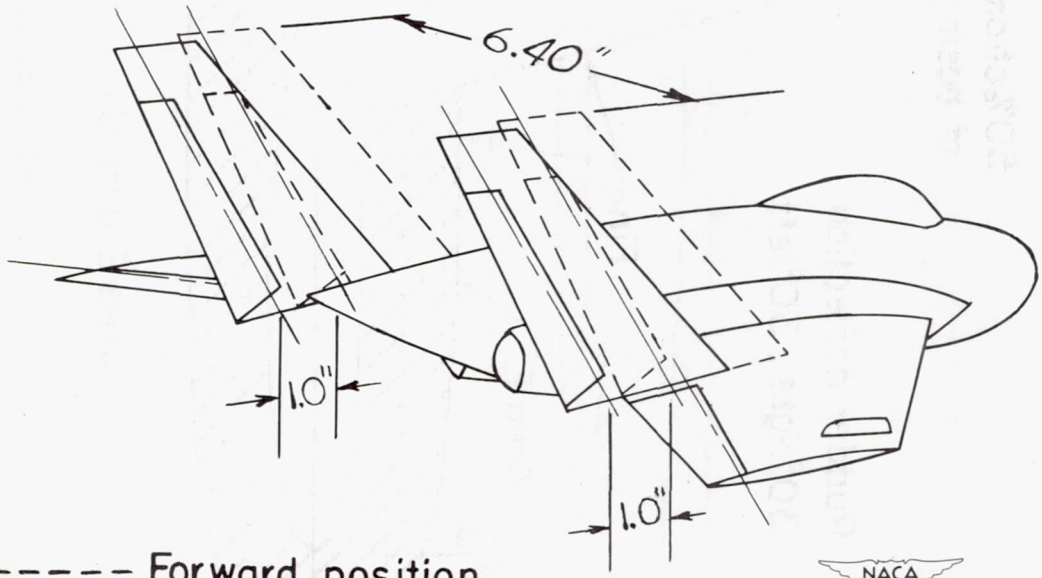

- - - - - Forward position
——— Rearward position

Dual vertical tails in forward and rearward positions

(d) Model 6.

Figure 5.- Continued.

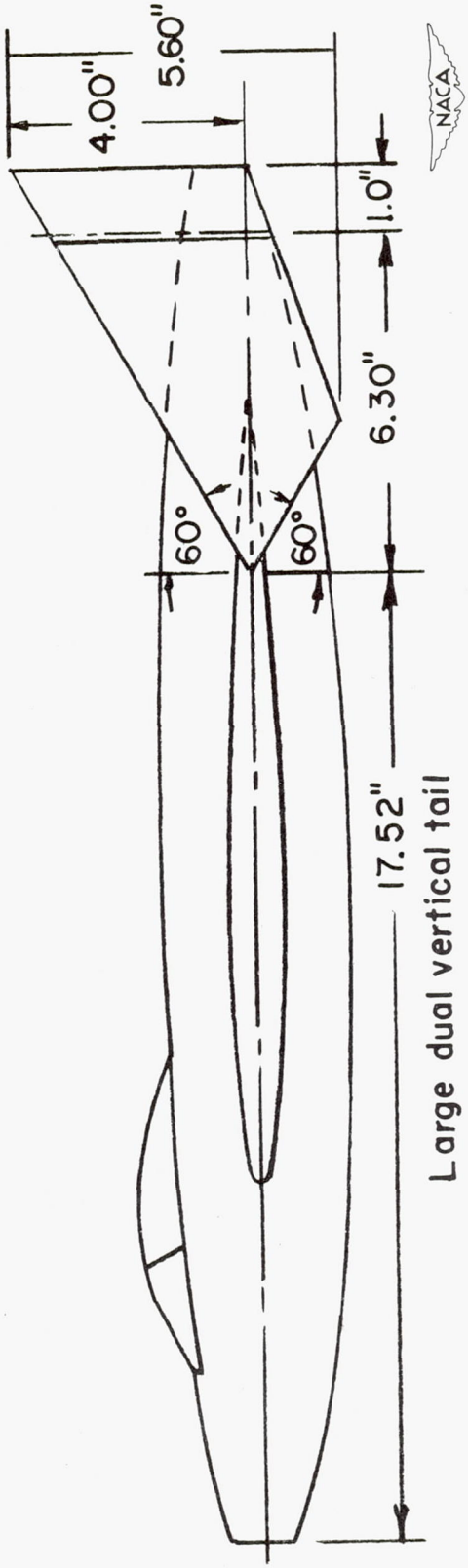

(e) Model 7.

Figure 5.- Continued.

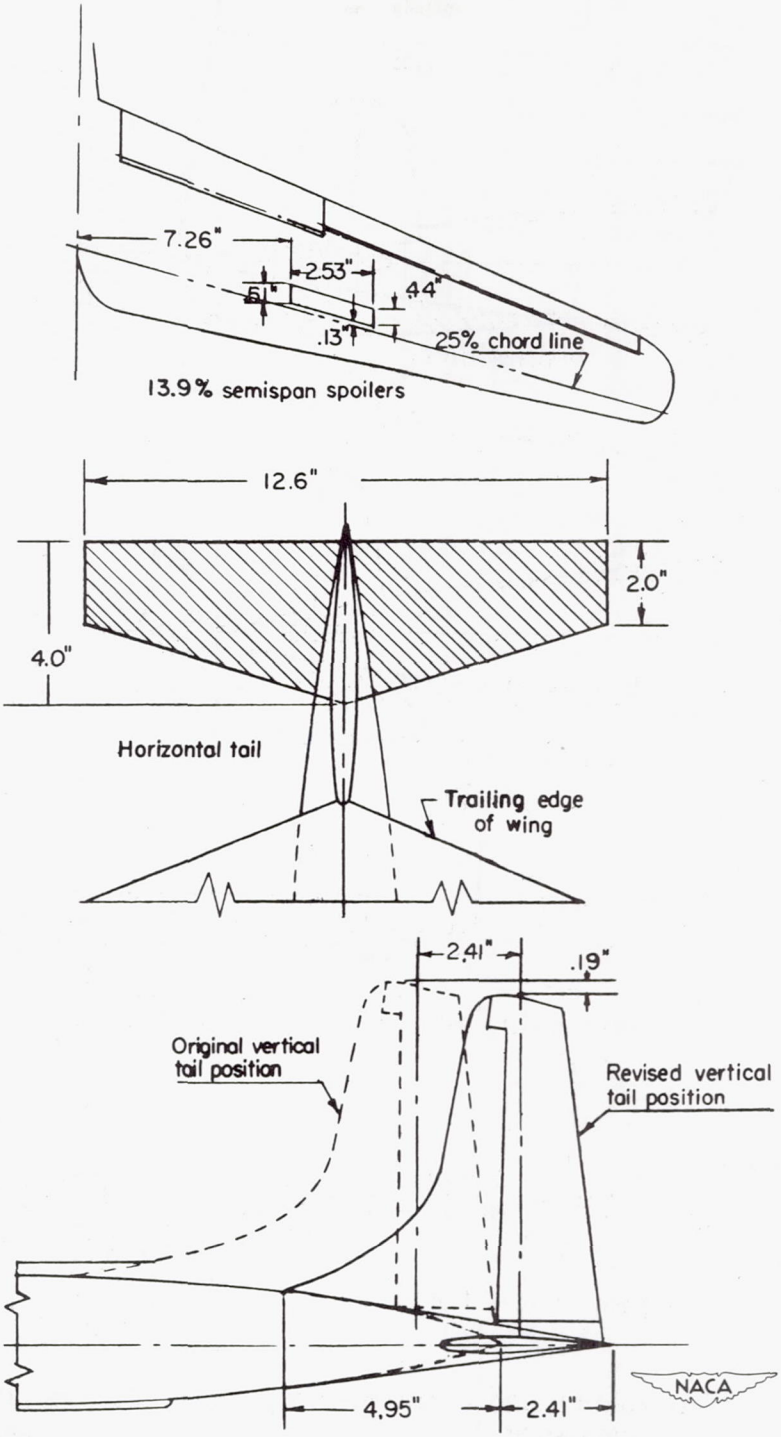

Increased vertical tail length with horizontal tail added.

(f) Model 8.

Figure 5.- Continued.

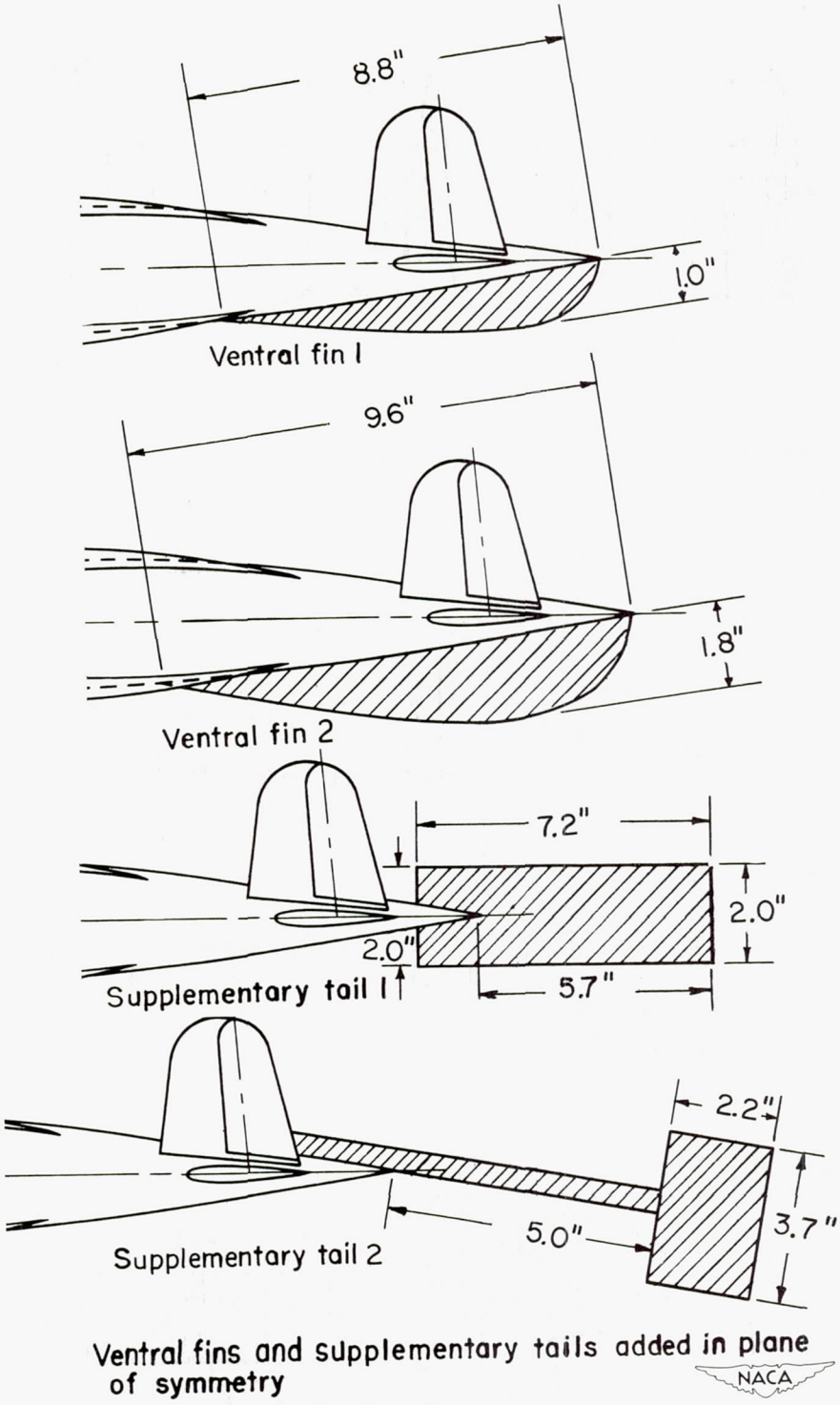

(g) Model 10.

Figure 5.- Continued.

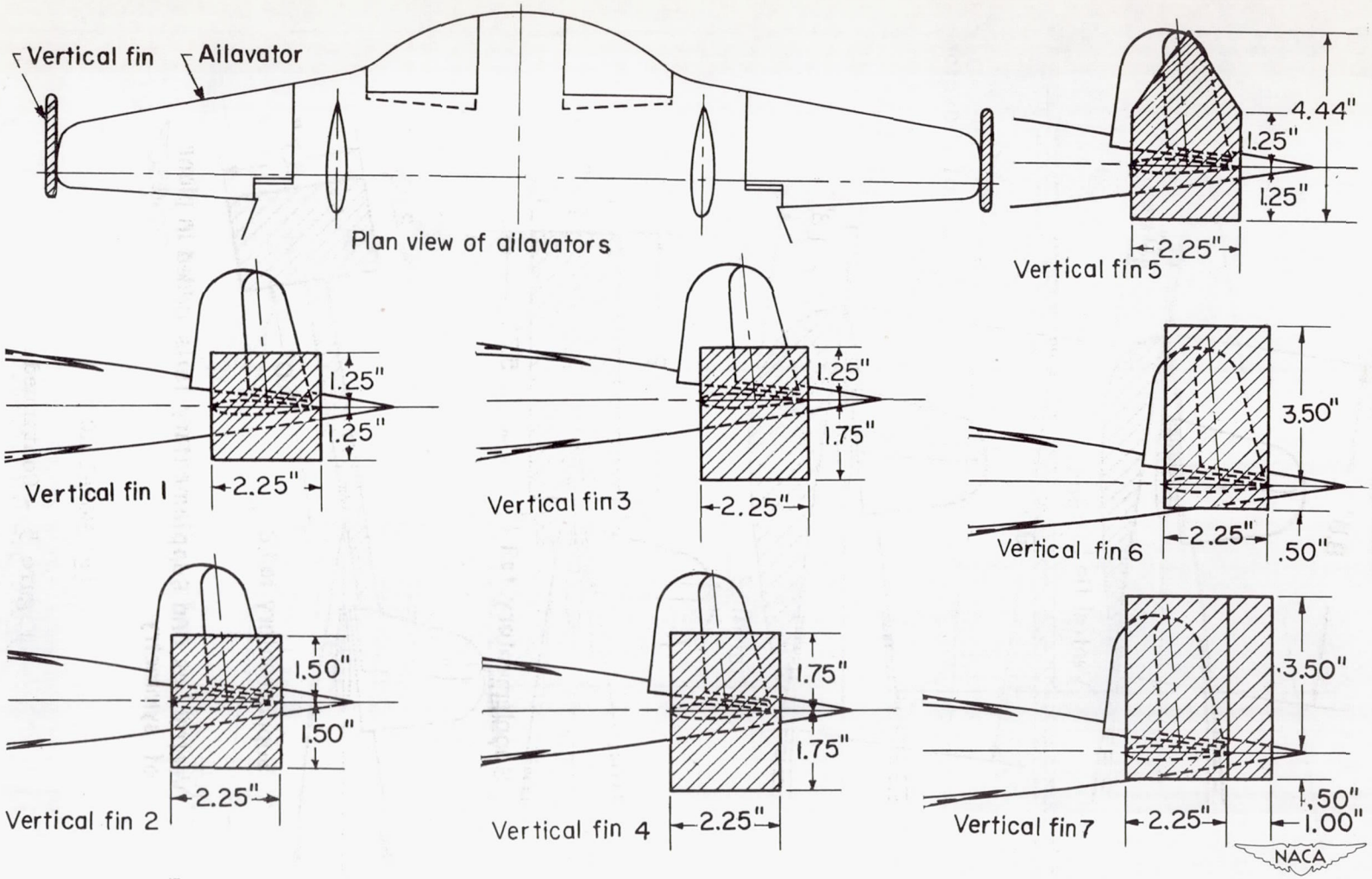

(g) Continued.

Figure 5.- Continued.

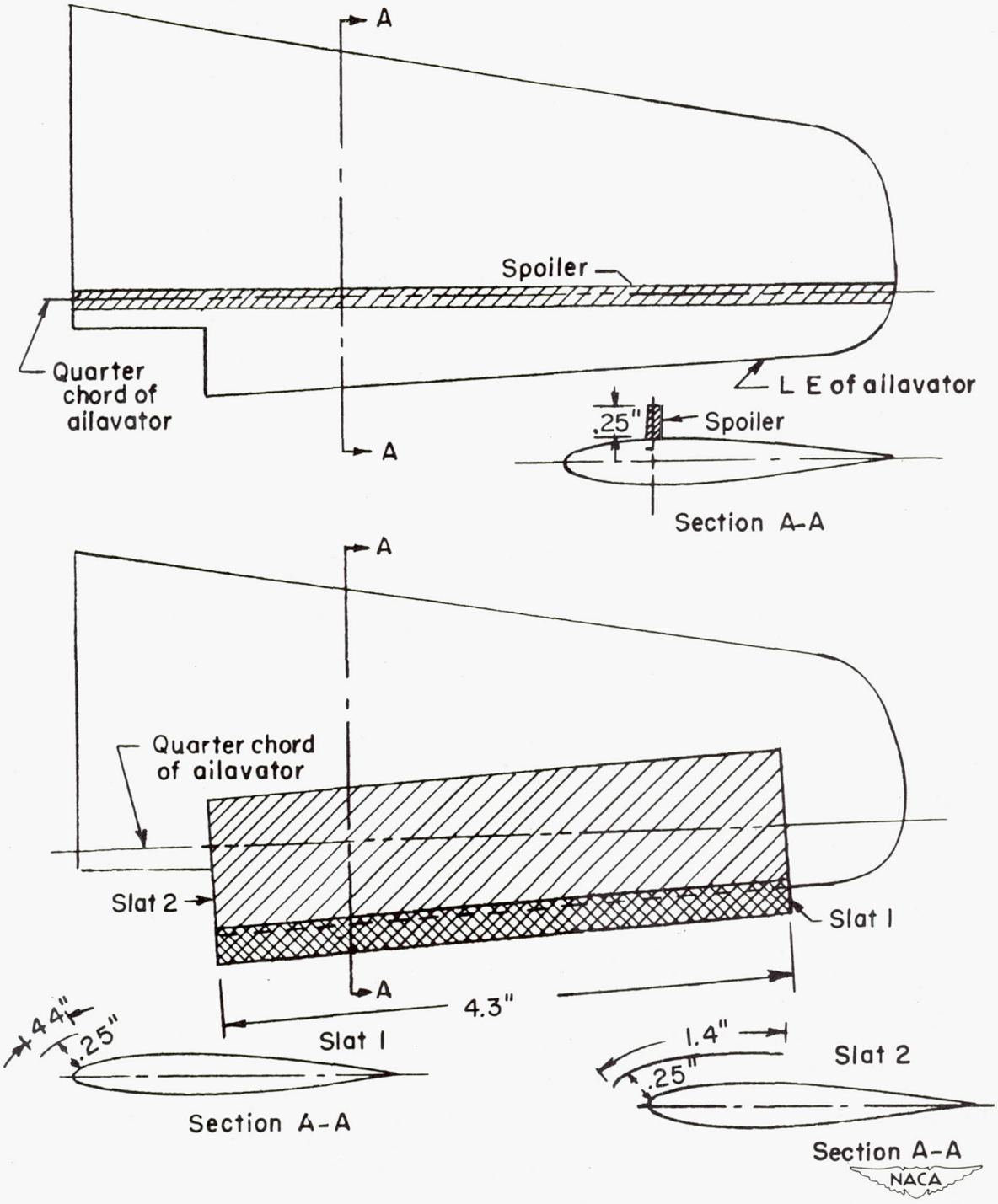

(g) Continued.

Figure 5.- Continued.

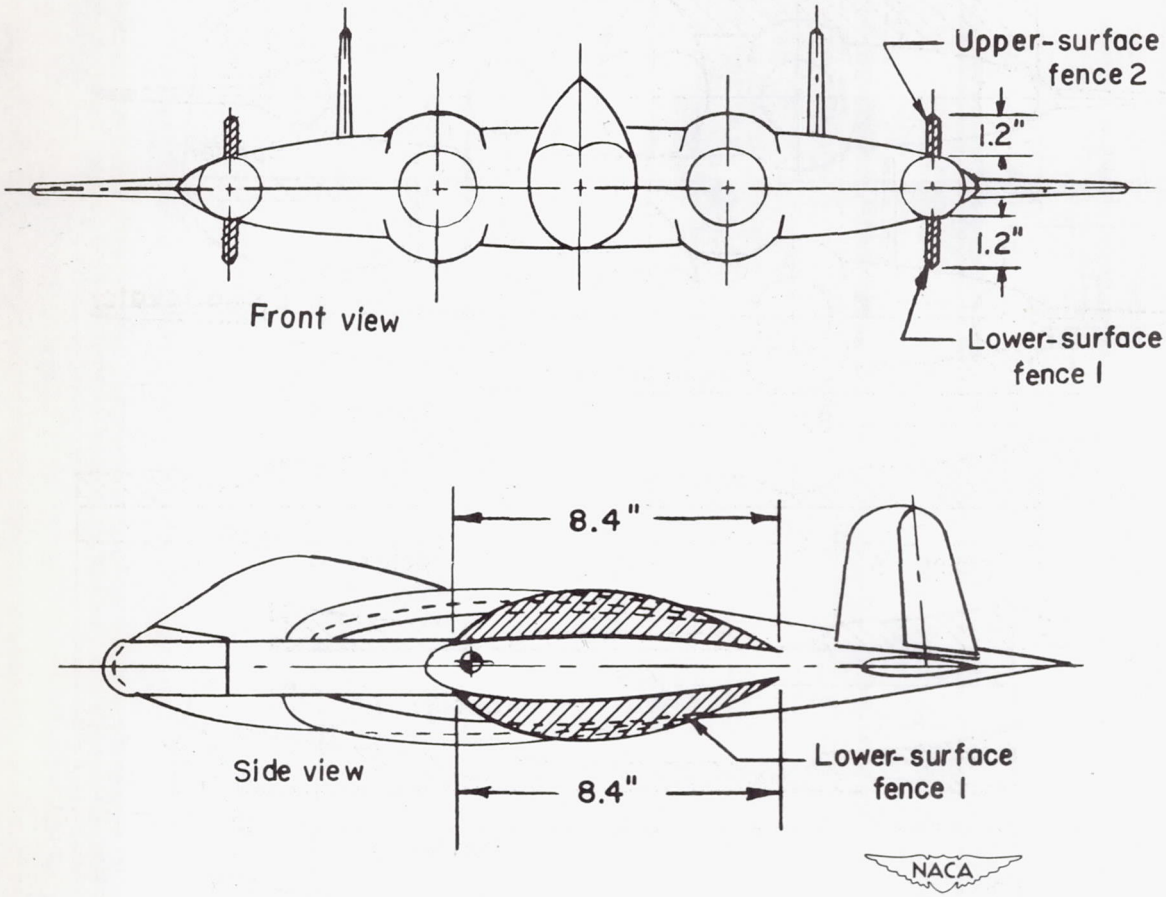

(g) Continued.

Figure 5.- Continued.

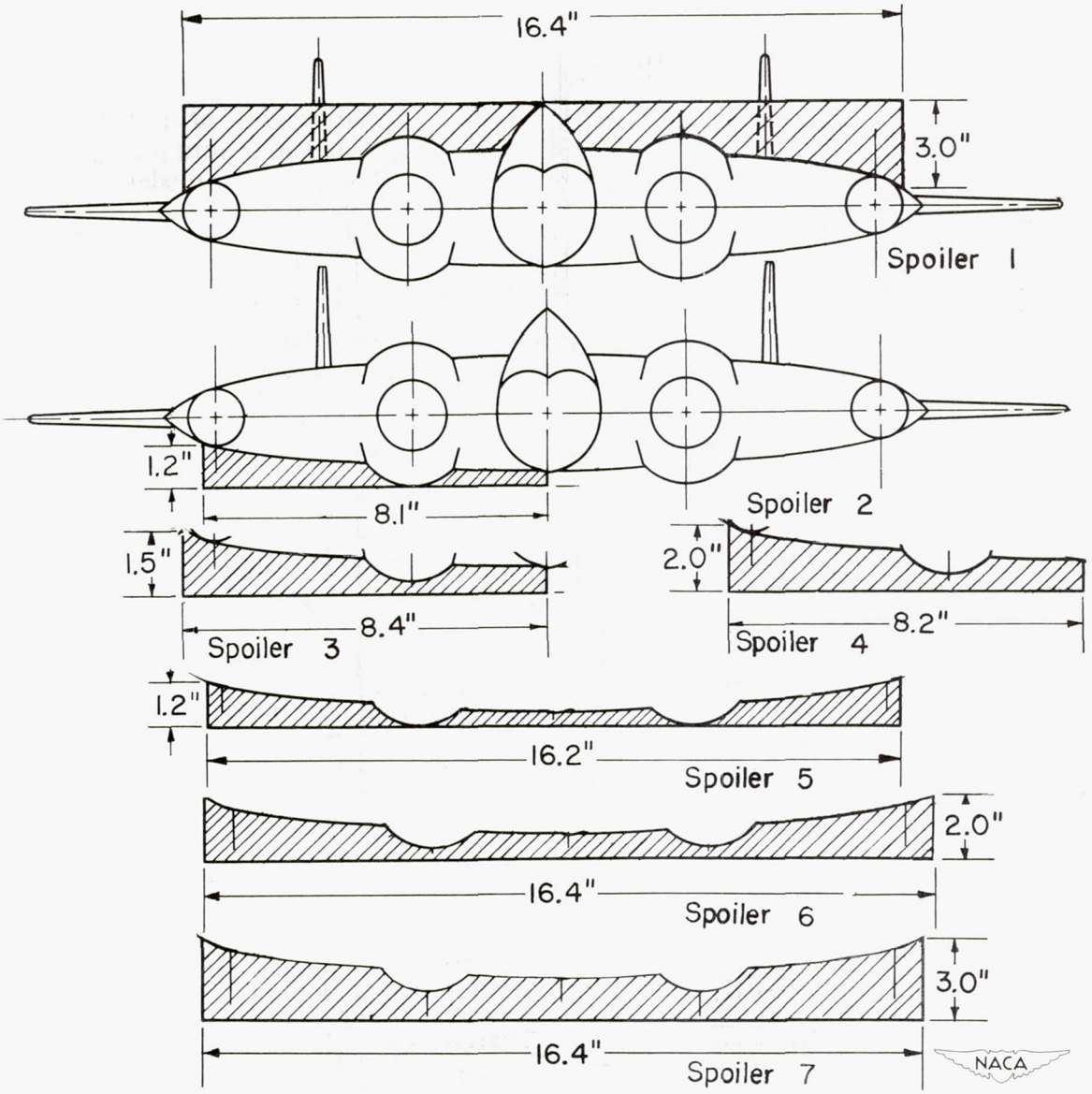

Spoilers added at c/4 line

(g) Continued.

Figure 5.- Continued.

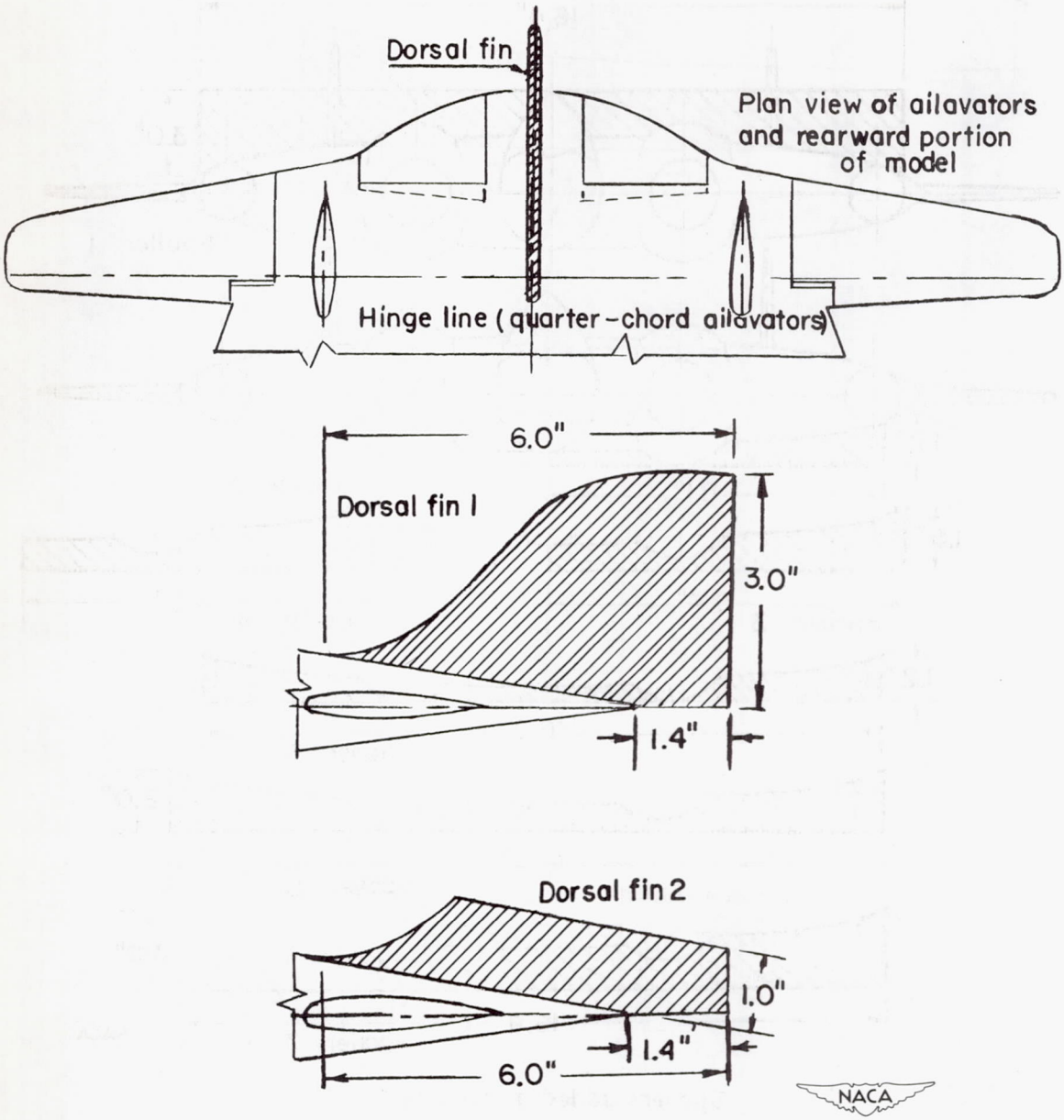

(g) Concluded.

Figure 5.- Continued.

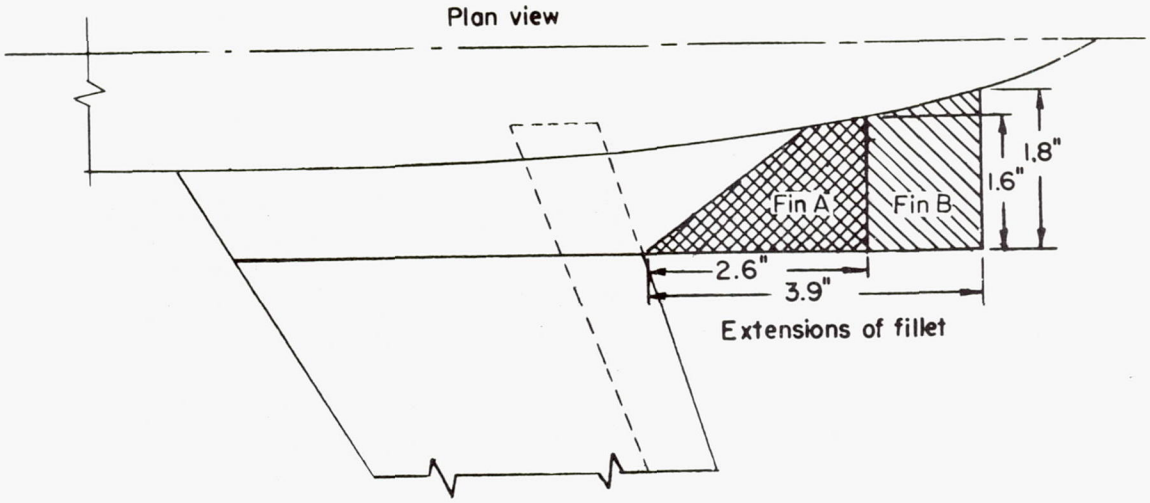

Fins A and B

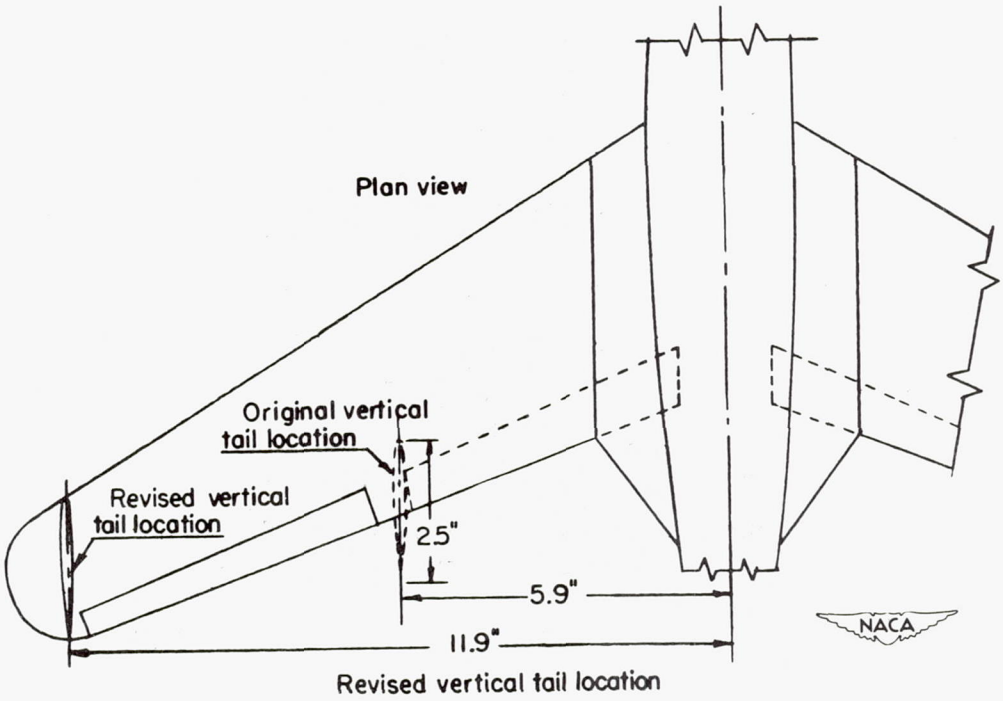

Revised vertical tail location

(h) Model 11.

Figure 5.- Continued.

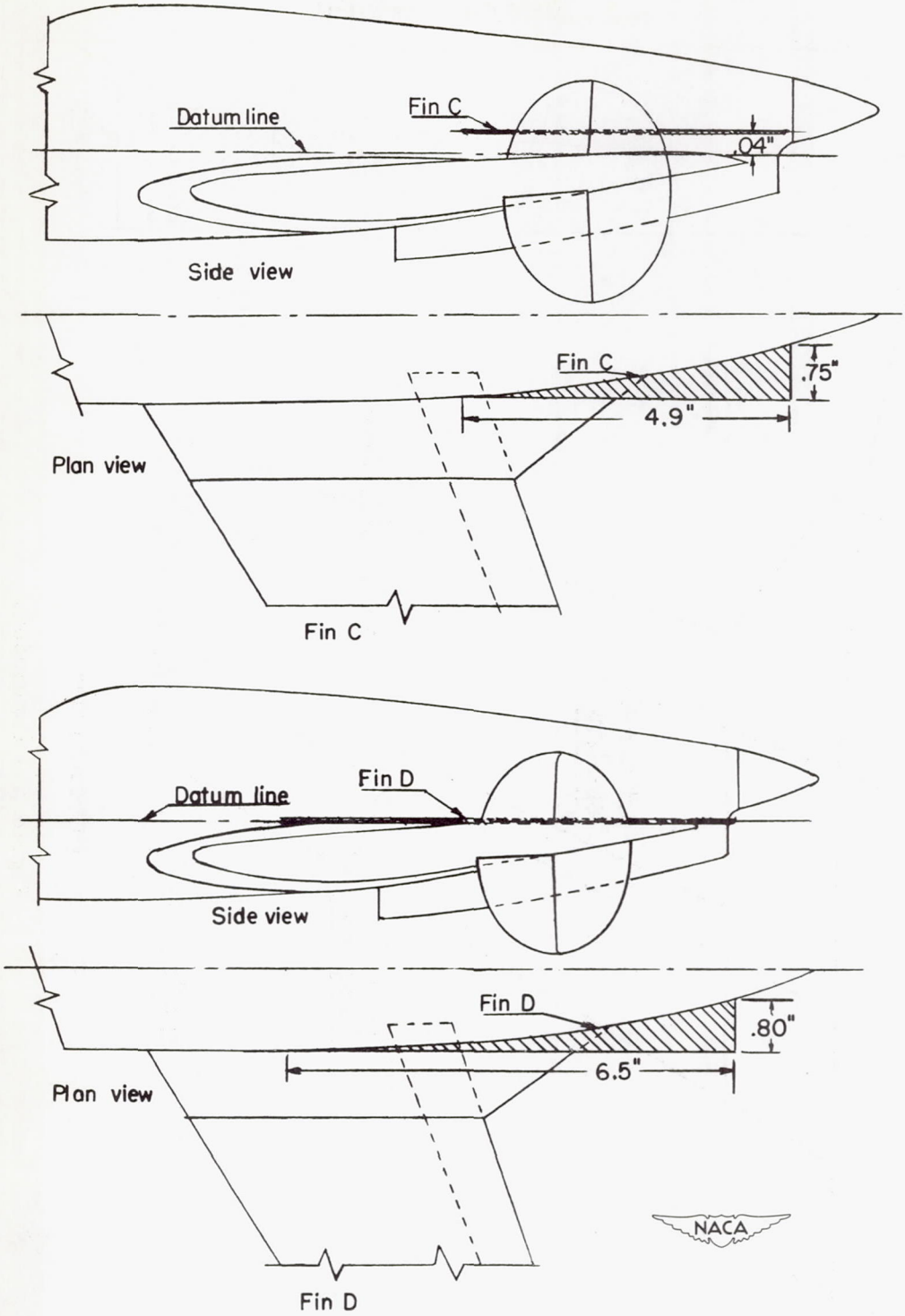

(h) Continued.

Figure 5.- Continued.

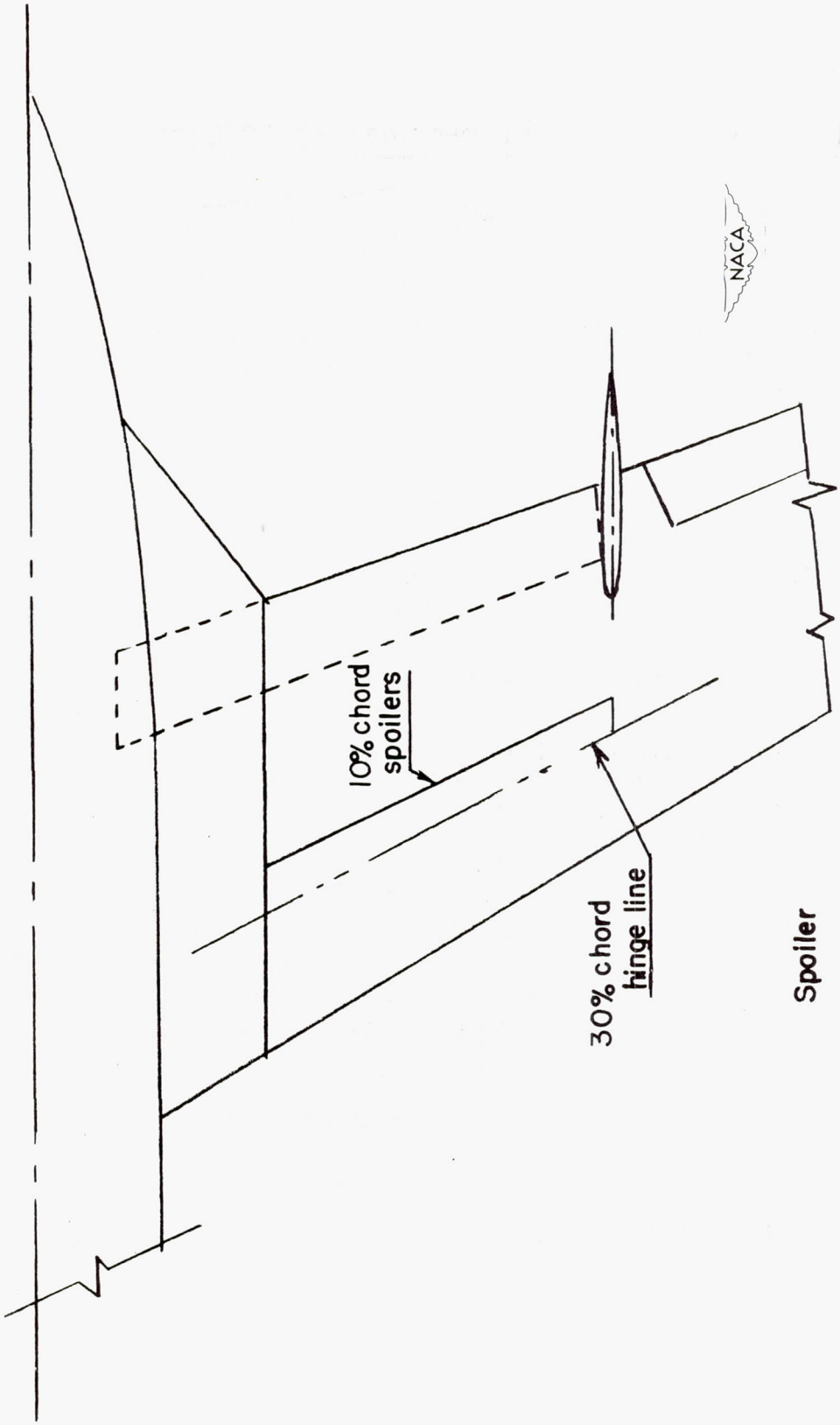

(h) Concluded.

Figure 5.- Concluded.

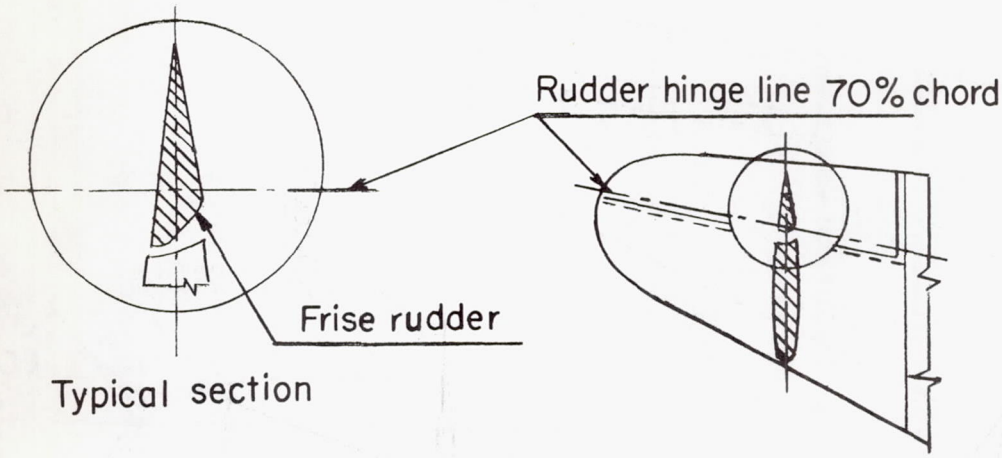

(a) Rudder detail for model 1.

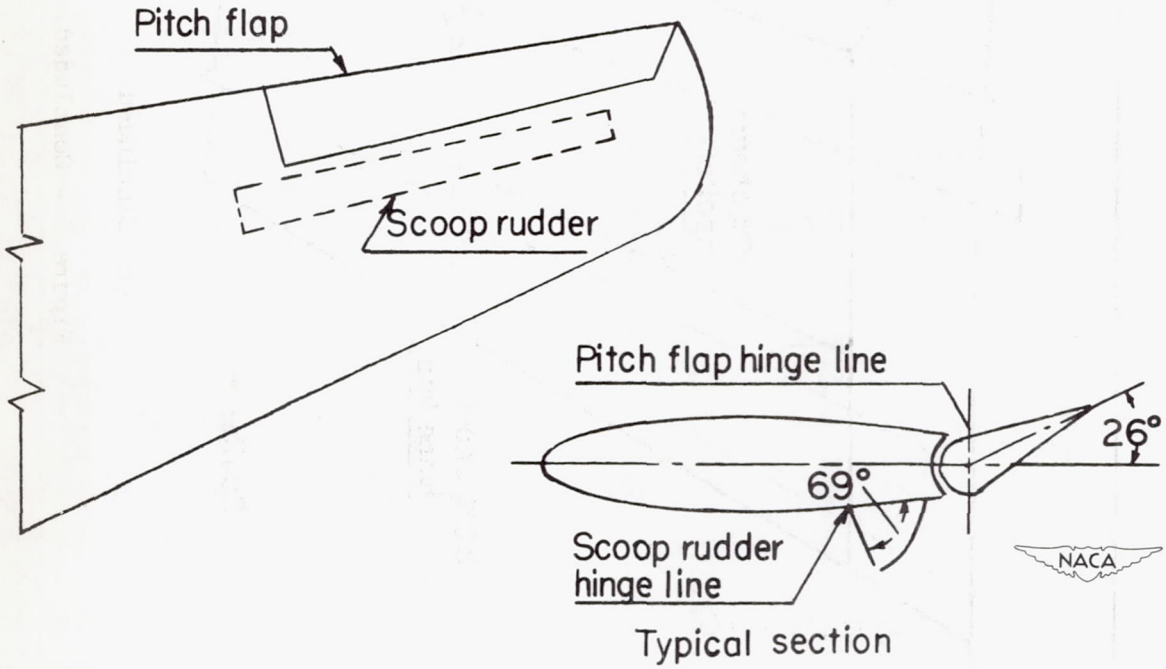

(b) Rudder detail for model 2.

Figure 6.- Details of drag-type rudders used on models 1 to 4.

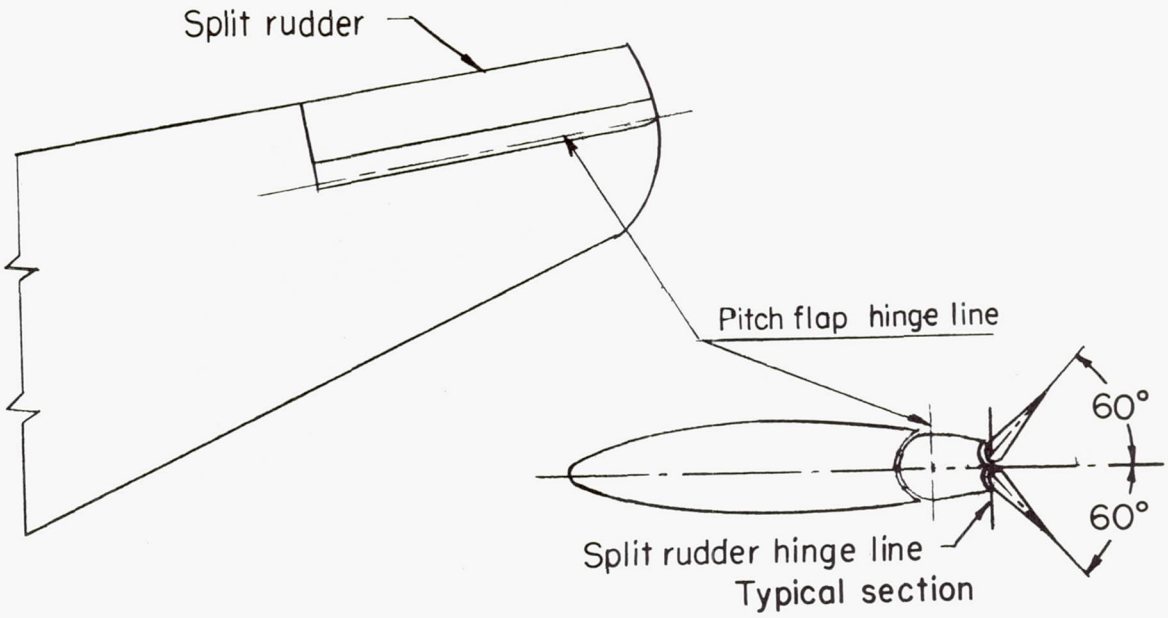

(c) Rudder details for model 3.

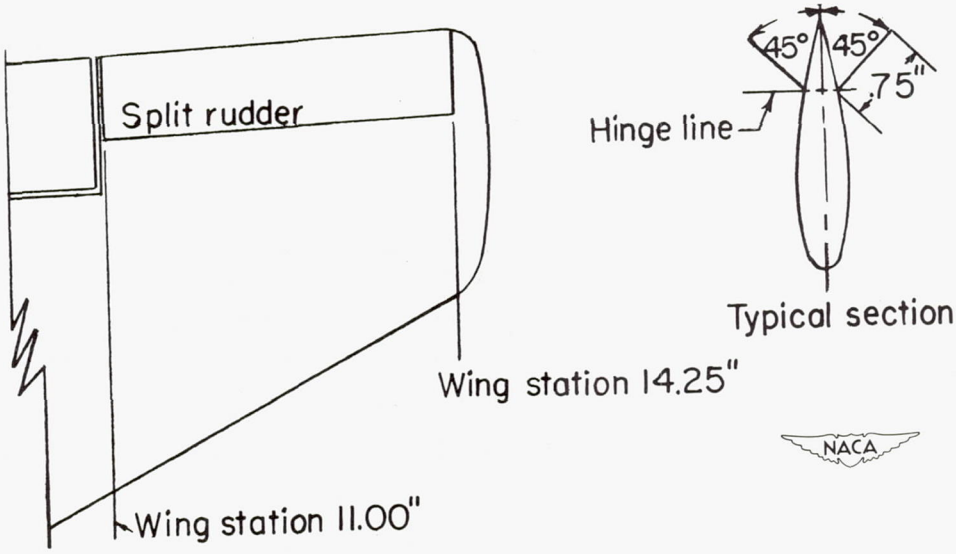

(d) Rudder details for model 4; split-type rudders.

Figure 6.- Continued.

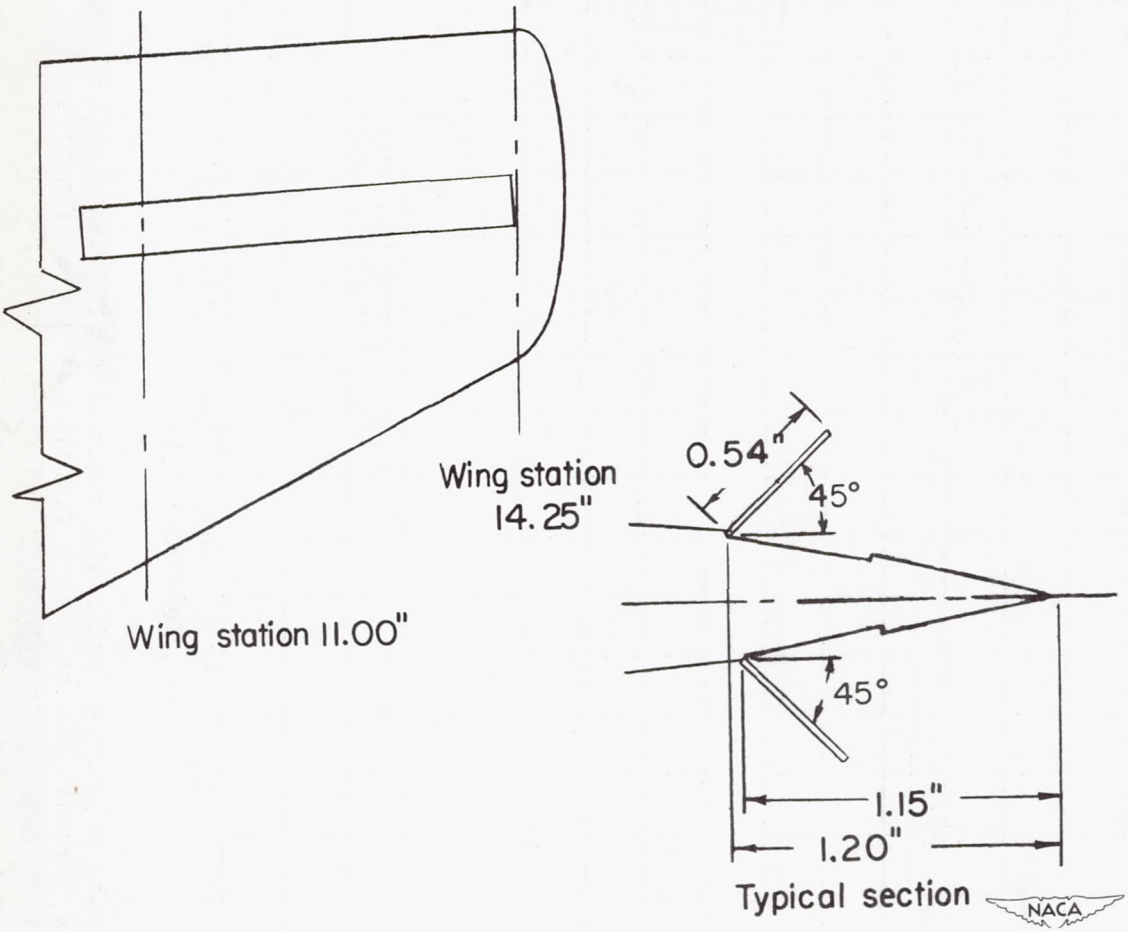

(e) Rudder detail for model 4; alternate circular-arc type rudder.

Figure 6.- Concluded.

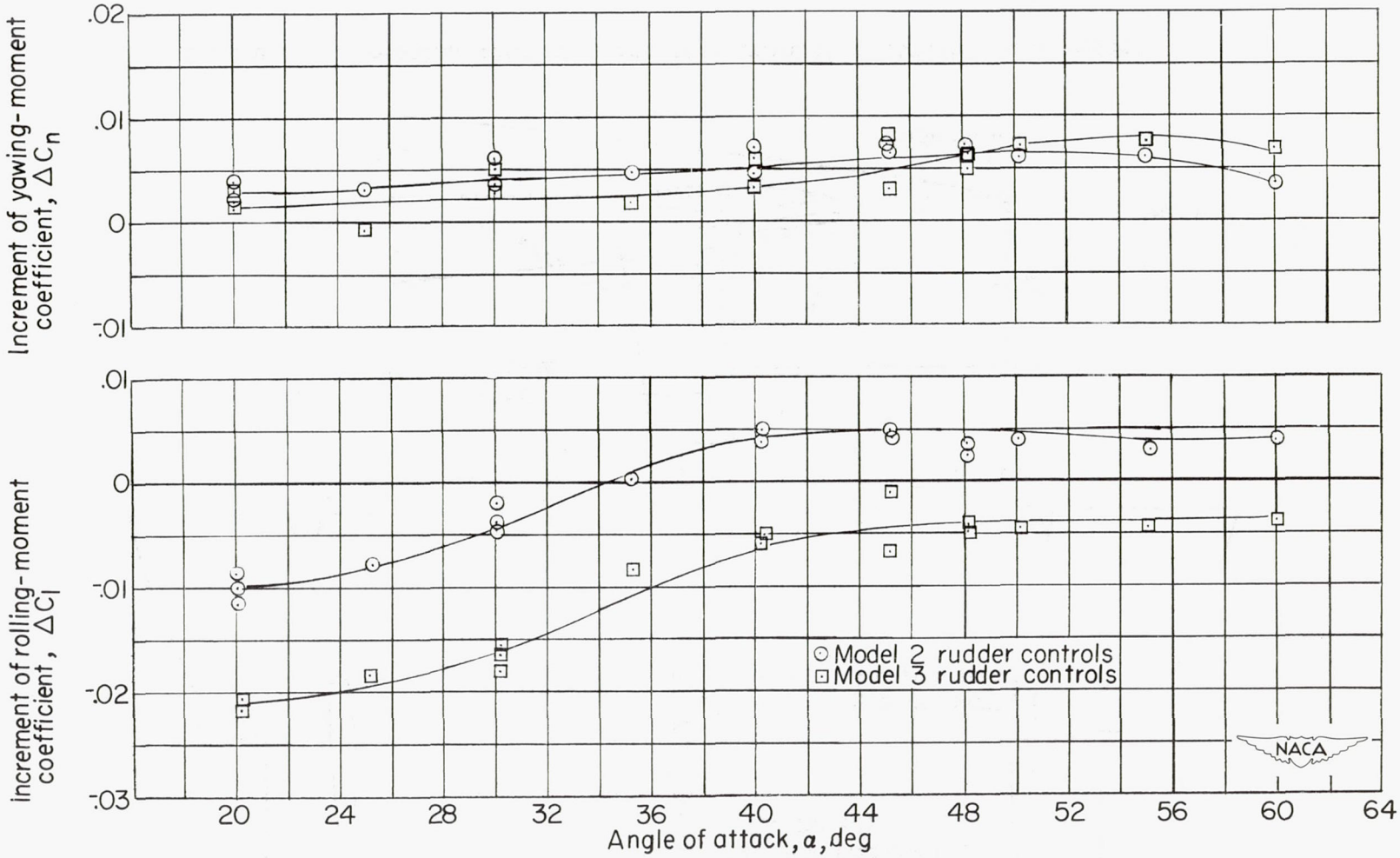

Figure 7.- Increments of yawing- and rolling-moment coefficients contributed by models 2 and 3 rudder controls as a function of angle of attack. Rudder controls on right wing tip fully deflected; rudder controls on left wing tip neutral; q = 4.274.

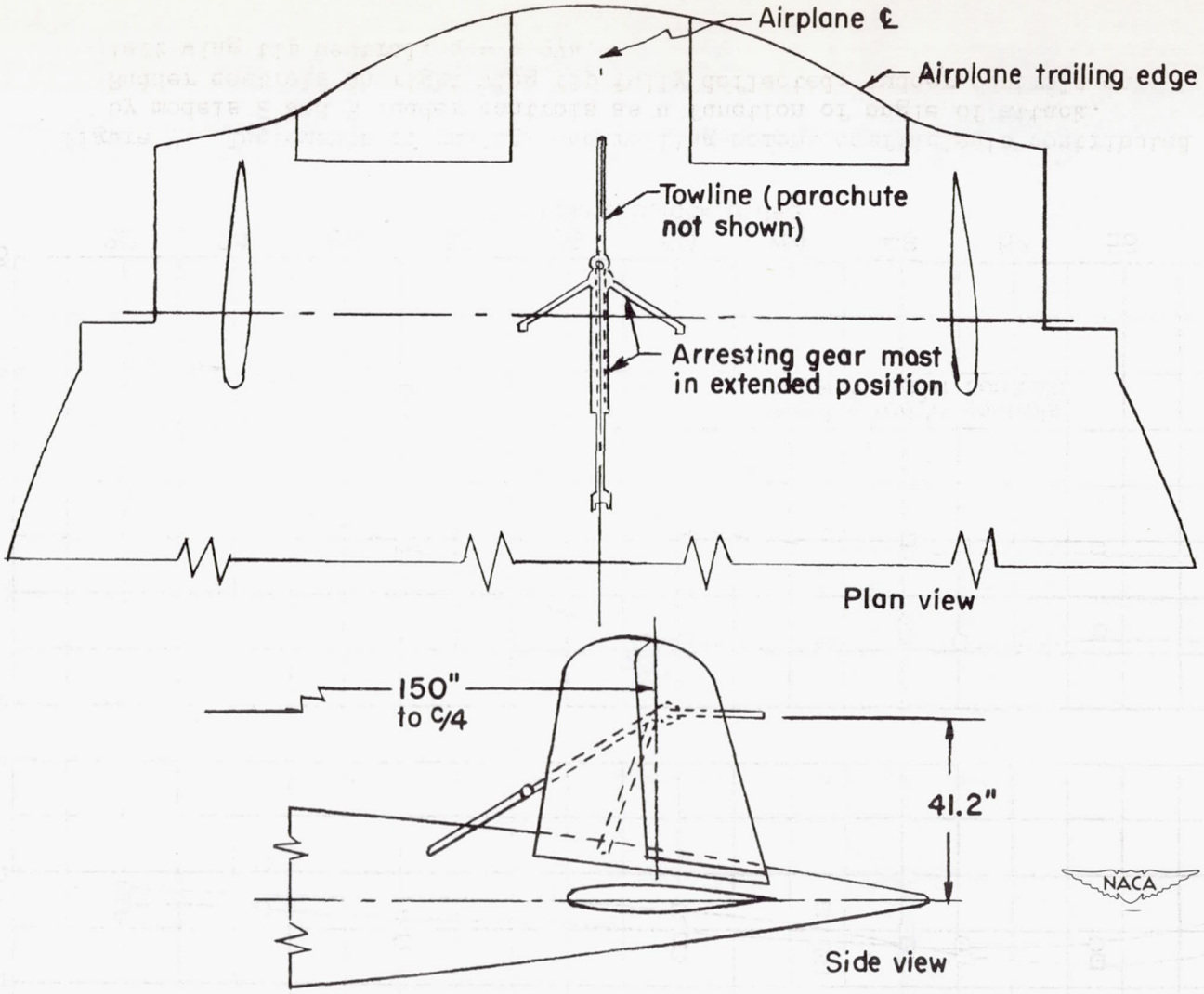

Figure 8.- Arresting gear mast for tail parachute attachment of model 10.