NACA RM E52E20

NACA

RESEARCH MEMORANDUM

SURVEY OF SOME PRELIMINARY INVESTIGATIONS OF SUPERSONIC DIFFUSERS AT HIGH MACH NUMBERS

By Edgar M. Cortright, Jr., and James F. Connors

Lewis Flight Propulsion Laboratory
Cleveland, Ohio

NATIONAL ADVISORY COMMITTEE
FOR AERONAUTICS
WASHINGTON

July 10, 1952
Declassified September 1, 1959

NATIONAL ADVISORY COMMITTEE FOR AERONAUTICS

RESEARCH MEMORANDUM

SURVEY OF SOME PRELIMINARY INVESTIGATIONS OF SUPERSONIC DIFFUSERS AT HIGH MACH NUMBERS

By Edgar M. Cortright, Jr., and James F. Connors

INTRODUCTION

Design studies of long-range supersonic missiles indicate the Mach number range of 3 to 4 to be of considerable promise. Accordingly, the NACA is conducting research on the performance of a wide variety of supersonic diffusers in this range. The initial phase of this research is concerned primarily with the characteristics of conventional axially symmetric diffusers operating at design values of flight Mach number. In addition, some investigations of side inlets and two-dimensional "split-wing" inlets have been conducted. The present paper will briefly summarize the results of this preliminary research in the light of missile-inlet requirements.

DISCUSSION

The supersonic diffuser types on which the majority of this discussion will be based are shown in figure 1. All these diffusers utilize a projecting centerbody to create external compression ahead of the terminal shock wave which is located at or near the diffuser throat. The 1-cone diffuser is so designated because it utilizes a single conical surface to generate a compression wave ahead of the throat. A modification of this inlet, the 1-cone (low-drag cowl) inlet, incorporates a high rate of turning at the throat so as to reduce the cowl lip angle and virtually eliminate the external pressure drag. Since there are no existing criteria as to how rapidly the flow at the entrance may be turned back toward the engine axis, this inlet was designed to represent a limiting case. In order to make the inlet function properly (with normal shock swallowed), it was necessary to eliminate or reduce boundary-layer separation which occurred on the centerbody immediately downstream of the sharp turn. This was accomplished by drilling holes in the centerbody at this point and venting the interior to free-stream static pressure. Boundary-layer air passed into the centerbody through the holes and then discharged into the free stream through hollow centerbody support struts. This action will be discussed more fully at a later point. A third inlet type is the 1-cone inlet with internal contraction designed for additional compression ahead of the terminal shock wave. This inlet is theoretically capable of higher pressure recovery than the 1-cone inlet and will have a lower cowl drag because of decreased cowl lip angles. Another, the

2-cone inlet, utilizes two conical surfaces to generate compression waves ahead of the throat. This diffuser may, of course, have internal contraction and did so in the present investigations.

The so-called isentropic spike diffuser utilizes a continuous compression surface ahead of the throat and theoretically yields the highest total pressure recovery of any of this family of diffusers. The spike tip may be long and slender, as indicated, or may be a cone of moderate angle. The compression surface generally produces large amounts of turning and the resultant cowl lip angle may require a detached shock wave and high pressure drag. Use of some internal contraction may alleviate this problem by reducing the lip angle. An interesting approach to the problem of high cowl drags in the case of inlets with large external compression has been proposed by members of the staff of the John Hopkins University (reference 1). This streamlined or shielded isentropic inlet is fitted with an annular extension of low drag profile supported ahead of the cowl proper. The shield essentially converts the inlet into a supersonic diffuser with large internal contraction. Swallowing of the starting shock wave is permitted by spilling flow through the annular opening. Once supersonic flow is established up to the throat, careful contouring of the cowl might provide a pressure balance across the dead air region, permitting little or no spillage of captured air. This has been achieved with varying success at lower Mach numbers. At a Mach number of 3.85, however, the inlet has not been made to operate without spilling large quantities of air; this inlet is thus unsatisfactory in its present state of development.

The adverse pressure gradients imposed upon the boundary layer generated by the centerbody are very great at the Mach numbers under consideration, particularly in the case of the high compression inlets. In an attempt to prevent extensive boundary-layer separation on the forebody and in the throat, porous centerbodies, fabricated of sintered bronze, have been utilized to remove the boundary layer continuously from the spike tip to a station slightly downstream of the diffuser throat. The air is handled in the same way as with the 1-cone inlet with low-drag cowl already discussed.

Combining recent data obtained at Mach numbers of 3.05 and 3.85 with data existing in the literature yields general curves of the variation of total pressure recovery with flight Mach number for the various diffuser types. These variations are shown in figure 2 where the curves generally represent a high mean. Data points are indicated where new data establish the curves. With the exception of the 1-cone type, no distinction is made between inlets with or without internal contraction. Above a Mach number of 1.9 the total pressure recovery of all the diffusers begins to drop off quite rapidly and, in addition, the spread between the curves increases greatly. The pressure recovery increases as the compression is made more nearly isentropic but not quite so much

as would be expected from simple shock theory, which, at a Mach number of 3.85, would predict a 36-percent recovery for the 1-cone inlet and a 93-percent recovery for the isentropic spike diffuser. The shielded isentropic spike yielded a reasonably high pressure recovery but, because of its unsatisfactory mass flow characteristics, this inlet will not be discussed further herein.

As a matter of academic interest, the highest recovery at $M_0 = 3.85$ was obtained with a porous isentropic spike. Although schlieren photographs indicated little if any boundary-layer separation in the presence of the existing strong adverse pressure gradients, no large increases in pressure recovery have been achieved to date. Future research will include porous centerbodies and cowlings in the internal flow passages.

One important negative result at $M_0 = 3.85$, which is not illustrated by this figure, is the lack of success with inlets with variable internal contraction ratio. With both two and three-dimensional diffusers any attempt, following starting of the inlet, to exceed the limiting starting contraction as set forth by Kantrowitz and Donaldson (reference 2) was met with expulsion of the normal shock wave except in some cases with extensive boundary-layer control. Even in these cases, however, no improvements in pressure recovery were obtained.

Up to this point only peak pressure recoveries have been considered. There are practical difficulties associated with operation at peak pressure recovery. In addition, if the peak recovery occurs at a point of less than maximum mass flow it is generally not desirable to operate at this point. Accordingly, it is of interest to examine the characteristics of various supersonic diffusers, which are illustrated in figure 3 for a flight Mach number of 3.05. Total pressure recovery is plotted as a function of mass flow ratio, defined as the ratio of the mass flow through the engine to the mass flow through a free-stream tube area equal to the projected inlet capture area. With supercritical flow, by definition, the diffuser is operating along a line of constant mass flow with the pressure recovery increasing as the normal shock moves closer to the throat. The maximum mass flow ratio varied considerably among the inlets investigated with the high-recovery inlets generally spilling from 8 to 10 percent of the maximum mass flow m_0. It is not felt that this spillage is inherent except, possibly, in the case of the isentropic inlet without internal contraction, which had external compression to a low enough Mach number to require shock detachment from the cowl lip. However, of the inlets investigated, which were designed by simple shock theory with maximum internal contraction and without boundary-layer consideration, only the 1-cone inlet could be operated at a mass flow ratio of 1. Any attempt to increase the mass flow of the other inlets by moving the cowlings forward resulted in excessive contraction and movement of the normal shock wave ahead of the inlet.

With movement of the normal shock wave ahead of the inlet, all the diffusers began to buzz; that is, the normal shock wave began to pulse in and out of the inlet. The buzz was accompanied by large fluctuations in the diffuser mass flow and pressure recovery. The dotted portions of the curves represent unsteady flow as measured by manometer boards which tend to damp out and average the measurements. The degree to which it is possible to operate close to the peak recovery point but in the unsteady region varies among the various diffusers and, of course, the presence of flame holders and combustion may alter the buzz characteristics. Actually, a serious question exists as to whether combustion may be maintained with strong buzz.

Among the techniques to avoid buzz are two simple but somewhat unsatisfactory expedients. The inlet may be operated slightly supercritically at reduced pressure recovery, allowing a margin for movement of the normal shock wave without travel ahead of the cowl lip. In a turbojet, the reduced pressure recovery reduces the mass flow and thrust and increases specific fuel consumption. With a ram jet the reduced recovery may be allowed for in the engine sizing, but there remains an increase in fuel consumption. Another approach is to operate the diffuser with some supersonic spillage, which in most cases at lower supersonic Mach numbers has been demonstrated to provide a stable subcritical region where the normal shock wave may stand and thus reduce the mass flow without initiating the buzz condition. Although this approach permits operation at peak pressure recovery, it requires some additive drag. At low supersonic Mach numbers the additive drag is relatively small but at high Mach numbers it may not be, particularly in the case of the high-recovery diffusers. The ideal inlet with stable subcritical flow, high recovery, and low drag is not at hand. Some asymmetrical configurations have shown stable characteristics and research in this direction is planned.

Diffuser characteristics at a Mach number of 3.85 are shown in figure 4. The same general characteristics exist, although some additional features may be noted in this figure. A relatively small decrease in mean pressure recovery during buzz was encountered with the low-recovery inlets. The severity of the pulsations as observed by schlieren photographs, however, was not reduced. The 1-cone inlet designed for low drag would not operate with the normal shock swallowed as mentioned previously. Application of boundary-layer suction made operation with a swallowed shock possible, with its associated increase in mass flow and pressure recovery. Recent measurements indicate that only 1 or 2 percent of the mass flow through the inlet was removed by the suction. The 2-cone inlet initially yielded a low maximum mass flow. When roughness was applied to the cone tip, both the inlet pressure recovery and mass flow increased appreciably. Adding roughness to the isentropic spike increased the pressure recovery from 0.57 to 0.61 without appreciably altering the mass flow ratio. The mass flow ratios could not be increased by varying the cowl locations, again as a result of a detached shock in the case of the isentropic inlet, and internal contraction in the case of the other inlets.

Schlieren photographs are presented in figure 5 to illustrate the effects of tip roughness. The 2-cone inlet is shown with and without roughness. Without roughness the boundary layer separated and "bridged" the juncture between the two cones. The action of the roughness was presumably to generate a turbulent boundary layer which largely eliminated the separation. This phenomenon was previously reported by the University of Southern California (reference 3). A somewhat similar picture is observed in the case of the isentropic spike where an apparent separation was eliminated by the roughness.

The 1-cone inlet with low-drag cowl with and without boundary-layer control at the throat is shown in figure 6. With no suction, separation of the boundary layer at the throat presumably results in excessive internal contraction and a detached shock wave ahead of the inlet. With removal of some of the boundary layer at the throat, the flow attaches and the normal shock wave is swallowed.

In a consideration of the characteristics of supersonic diffusers, a somewhat different phenomenon may be encountered in the case of two-dimensional diffusers. This is illustrated in figure 7 where total pressure recovery is plotted as a function of mass flow ratio for such a diffuser utilizing an isentropic wedge with internal contraction. Supercritical operation appears similar to that of the three-dimensional counterpart. When the inlet goes subcritical, however, the flow separates on either the top or bottom of the wedge at zero angle of attack and on the top at positive angle of attack. This asymmetrical separation is believed to result from a twin-duct interaction in the subsonic diffuser and is accompanied by very large discontinuities in pressure recovery and mass flow. In addition, discontinuities in the wing section characteristics appear.

A large fraction of diffuser tests and all those discussed to this point have been made at relatively low values of Reynolds number. Observation of roughness effects strongly implies the probability of Reynolds number effects on supersonic diffuser performance. In figure 8, pressure recovery is plotted as a function of Reynolds number for the supersonic diffusers designed for $M_0 = 3.05$ and operating in the variable Reynolds number tunnel at $M_0 = 3.13$. The Reynolds number is based on the inlet diameter at the lip of the cowl and the data approach a value equivalent to a 3-foot-diameter inlet at 80,000 feet altitude. In the lower portion of the figure is shown a family of inlets the pressure recoveries of which increase with increasing Reynolds number. The 1-cone diffuser with rapid internal contraction (throat B as contrasted with a more gradual contraction in throat A) exhibited a discontinuity in its variation. In contrast to results at $M_0 = 3.85$, the presence of roughness lowered the pressure recoveries. In the upper portion of the figure, results with an

isentropic spike inlet with no internal contraction are shown. With this inlet the pressure recovery decreased with increasing Reynolds number until roughness was added to the spike tip. Retracting the cowl also altered the characteristics. It is thus indicated that the effect of Reynolds number is dependent on design details and that high Reynolds number may not necessarily be simulated by tip roughness. However, the variations indicated are not sufficiently large to influence a relative comparison of the inlets.

In any comparison of inlets, the drag is an important factor. In figure 9 are shown the drag coefficients based on maximum cross-sectional area of three ram-jet engines designed for the same net thrust minus drag but utilizing different supersonic diffusers. The cowl pressure drags are experimentally determined, whereas the friction and additive drags are estimated. The 1-cone and 2-cone inlets indicate drag coefficients which amount to approximately 25 and 28 percent, respectively, of the engine gross thrust at the indicated value of fuel-air ratio. A small amount of additive drag was encountered with the 2-cone inlet. This drag probably could have been eliminated by redesign at the expense of a slight increase in cowl drag. The isentropic spike inlet exhibited a reduced cowl drag due to the presence of large amounts of flow spillage which caused an expansion at the inlet lip and reduced the cowl pressures but which also caused large additive drag. The magnitude of this additive drag has not yet been determined but may be placed between the minimum and maximum values indicated. Drag of this ram jet would then fall between 29 and 36 percent of the gross thrust. The drag characteristics of the 1-cone inlet with low-drag cowl are currently being studied. Preliminary results, which show that only 1 to 2 percent of the flow was removed through the boundary-layer control, indicate a total drag coefficient of less than 60 percent of that of the 1-cone inlet.

By use of these data and the corresponding pressure recoveries and mass flow ratios, it is possible to compare the complete ram-jet engines. Such a comparison is made in figure 10 where sketches of three engines designed for the same thrust minus drag but utilizing different inlets are shown. Exit nozzle expansion to free-stream static pressure is assumed. The engines are assumed to operate at a fuel to air ratio of 0.024, which yields approximately the minimum specific fuel consumption, and with a combustion efficiency of 90 percent. In general, the engines are quite similar. Use of the high-recovery inlets results in engines of smaller diameter compared with the 1-cone inlet. In the case of the 1-cone inlet, the maximum diameter is governed by the size combustion chamber required for an inlet Mach number of 0.16 which has been assumed. With the 2-cone and isentropic inlets the diameter is governed by either the exit area or the rapidity with which the flow is turned at the throat. If excess cross-sectional area is utilized to enlarge the combustion chamber of the engines with these inlets, the chamber Mach number may be reduced from 0.16 to the values indicated. This reduction facilitates combustion. Of course, the higher-recovery inlets also have higher

combustion-chamber pressures, which may be significant at high altitudes. If only the engine thrusts and drags are considered, the 2-cone inlet and the isentropic inlet with minimum additive drag indicated engines of approximately 12 percent lower specific fuel consumptions than the engine utilizing a 1-cone inlet. With maximum additive drag, however, the isentropic spike inlet is comparable to the 1-cone inlet with respect to specific fuel consumption. It should again be recalled that these results are for specific inlets and that the 1-cone inlet investigated did not utilize as low a drag cowling as is possible; hence, the advantage in specific fuel consumption of going to higher-recovery inlets may not materialize following optimum development of each diffuser type. This possibility is emphasized by the fact that preliminary data for the 1-cone inlet with low-drag cowling indicate a slightly lower specific fuel consumption than any of the aforementioned cases. Hence, it must be concluded that from a specific fuel consumption standpoint at $M_0 = 3.85$, the low-recovery diffusers are competitive with those of high pressure recovery.

The discussion has thus far been limited to supersonic diffusers at zero angle of attack. For some missiles such as long-range missiles boosted to design point and flying at constant Mach number and lift-drag ratio, this condition is predominant. Other missiles are forced to maneuver and in such cases the inlet performance at angle of attack must be considered more heavily. In figure 11 total pressure recovery and mass flow ratio are plotted as a function of angle of attack for a group of supersonic diffusers at $M_0 = 3.05$ and another group at $M_0 = 3.85$. At $M_0 = 3.05$ the diffuser total pressure recoveries decrease at different rates with increasing angle of attack. The isentropic spike diffusers fall off in pressure recovery more rapidly than the 1-cone and 2-cone diffusers up to angles of attack of 6° to 7°, at which point the characteristics vary widely. The flow on the upper surface of the original isentropic spike with internal contraction separated (dashed portion) with a sudden large decrease in pressure recovery. Retraction of the cowling (flagged symbols) eliminated this effect. Separation also occurred on the 2-cone inlet. The corresponding mass flow ratios follow similar trends. All but the isentropic spike with no internal contraction maintain mass flow fairly well until angles of 6 to 7° are reached. It was observed that the separation also produced a discontinuity in mass flow ratio as would be expected. The elimination of this in the case of the isentropic inlet with internal contraction lowered the mass flow at zero angle of attack.

At $M_0 = 3.85$ similar results were obtained except that the performance of the isentropic spike inlet dropped off even more rapidly as compared with the other diffusers. Separation at high angles of attack was again observed for the isentropic inlet and 2-cone inlet with roughness on the cone tip. It is interesting to note that without roughness the mass flow ratio of the 2-cone inlet actually increased with angle of attack from its low value at zero angle of attack.

The effects of these decreases in mass flow and pressure recovery on the thrust of a given engine at angle of attack are illustrated in figure 12 for a Mach number of 3.85. For illustrative purposes the diffusers are treated as if capable of stable subcritical operation without reduced pressure recovery. The engine is assumed to operate at a fixed fuel-air ratio at constant combustion efficiency and the effects of increased additive drag and increased wave drag at angle of attack are not considered. The ratio of thrust to thrust at zero angle of attack is plotted as a function of angle of attack for several diffuser installations. In the left-hand side of the figure the case of constant combustion-chamber-inlet Mach number M_2, such as would result with a fixed outlet throat area and which might be required with a marginally high value at zero angle of attack, is considered. The decrease in pressure recovery forces a decrease in mass flow in excess of the minimum which could be spilled by the inlet. As a result, all the engines experience approximately a 10-percent thrust loss at $\alpha = 5^{\circ}$ with the exception of that utilizing an isentropic inlet, which loses almost 30 percent of its zero angle of attack thrust. If the outlet area is increased at angle of attack, excess spillage is not forced upon the inlets. The effect is particularly pronounced in the case of the isentropic inlet, where the losses are reduced to 10 percent at $\alpha = 5^{\circ}$, and the 2-cone without roughness, where a thrust increase is experienced because of the unusual increase in mass flow already discussed.

Schlieren photographs of several of these inlets at angle of attack are shown in figure 13. With the isentropic spike diffuser at $\alpha = 6^{\circ}$ at peak pressure recovery, the normal shock wave was observed to stand ahead of the inlet lip on the lower surface. At $\alpha = 9^{\circ}$ this shock moved still farther ahead, while on the upper surface separation occurred with subsonic and possibly reverse flow at the inlet. In the case of the 2-cone diffuser without roughness, the boundary layer washed towards the top of the cones resulting in decreased bridging on the lower surface and slightly increased bridging on the upper surface. The 1-cone inlet indicates a relatively unchanged shock pattern at angle of attack with the exception of some flow spillage and a slight boundary-layer thickening in the upper half. It may be remembered that this diffuser was least affected by angle of attack.

Recent experimental investigations have indicated that, in the Mach number range up to $M = 2$, widely different missile configurations may be aerodynamically comparable and that side inlets may perform as well as nose inlets if adequate removal of the initial boundary layer is provided. Investigation of a single side-inlet configuration has recently been completed at a Mach number of 2.93. In figure 14 pressure recovery is plotted as a function of Mach number for the case of a 1-cone inlet. The data at $M = 1.88$ have already been reported in the literature (reference 4). The supersonic diffuser studied at $M = 1.88$ was modified for the higher Mach number. Removal of the initial turbulent boundary layer at $M = 1.88$ yielded a pressure recovery comparable to that of a nose inlet. At $M = 2.93$, however, the recovery, which increased from

0.37 to 0.51, did not closely approach that of the nose inlet counterpart. It is of interest to point out that with an initial laminar boundary layer the ram scoop could not be made to operate in a stable manner. The resulting scoop pulsations spilled about half of the boundary layer into the inlet and resulted in only half of the improvement in recovery indicated in the figure.

The effect of boundary-layer removal on the thrust of two turbojet engine installations is shown in figure 15. The turbojet engines assumed were relatively low compression engines with afterburning to 3000° R. Exit nozzle expansion to free-stream static pressure was assumed. Thrust minus drag due to boundary-layer removal is plotted as a function of boundary-layer scoop height parameter h/δ, where h is the height of the scoop and δ is the thickness of the initial boundary layer at a point where the velocity is 0.99 that of the local free-stream value. The ratios of boundary-layer thickness to inlet radius were approximately 0.15. At $M_0 = 1.88$ with no boundary-layer removal the missile engine would deliver only 60 percent of the thrust possible with a nose inlet. Removal of the boundary layer with no associated drag increased this value to 97 percent. The drags associated with removal either through a duct with a sonic exit nozzle or by means of a wedge to deflect the flow around the inlet (assuming no penalty in inlet performance with removal by the deflection technique) are indicated to be relatively small. The indicated case of maximum drag refers to complete loss of boundary-layer momentum. At a Mach number of 2.93 the thrust with no boundary-layer removal is indicated to be only 42 percent of that possible with a nose inlet. Removal of most of the boundary layer increases this value to 83 percent, although the percentage losses associated with removal are apt to be larger than at the lower Mach number. (With some configurations, removing slightly less than the total boundary layer yields the highest pressure recovery.)

The effects of boundary-layer control on the specific fuel consumption of these installations, shown in figure 16, are less pronounced since the effect of decreased pressure recovery in reducing the mass flow through the engine is not reflected. At a Mach number of 1.88 with no drag considerations, the specific fuel consumption may be reduced by boundary-layer removal from a value 13 percent greater than the nose inlet installation to a comparable value. Drags of boundary-layer removal systems are apt to result in fuel consumptions several percent greater than with a nose inlet. At a Mach number of 2.93 specific fuel consumption is indicated to be improved from a value 25 percent higher than a nose inlet installation to a value 5 percent higher. Drags due to boundary-layer removal are more serious at this Mach number, and fuel consumptions at least 10 percent greater than with the nose inlet have been indicated by the single model investigated. With the limited data available, however, it is impossible to generalize on the results; it is probable that the performance of side inlets of the type investigated can be improved.

SUMMARY OF RESULTS

Preliminary investigations conducted at high Mach numbers have shown that supersonic diffusers designed for high total pressure recovery fall increasingly short of their design value as the flight Mach number is increased. Relatively high values of pressure recovery in the high Mach number range have been obtained, however. High-recovery inlets facilitate the attainment of smaller engines, lower combustion-chamber Mach numbers, and higher service ceilings. Their drags appear higher, however, so that from a specific fuel consumption standpoint, the high- and low-recovery inlets appear to be competitive in the light of present knowledge. On the debit side, the higher-recovery inlets have been found to be somewhat more sensitive to angle of attack. Finally, limited investigations indicate the continued necessity of boundary-layer removal ahead of side inlets as flight Mach numbers increase.

REFERENCES

1. Rae, Randolph S.: Some Recent Results Obtained with the Streamlined Cowling Diffuser. Applied Physics Lab., John Hopkins Univ., 1950.

2. Kantrowitz, Arthur, and Donaldson, Coleman duP.: Preliminary Investigation of Supersonic Diffusers. NACA ACR L5D20, 1945.

3. Dailey, C. L., and MacFarland, H. W.: Development of Ram-Jet Components. Aero. Lab., Univ. Southern Calif., April 1951. (Bur. Aero., Navy Contract NOa(s) 51-116-c.)

4. Goelzer, H. Fred, and Cortright, Edgar M., Jr.: Investigation at Mach Number 1.88 of Half of a Conical-Spike Diffuser Mounted as a Side Inlet With Boundary-Layer Control. NACA RM E51G06, 1951.

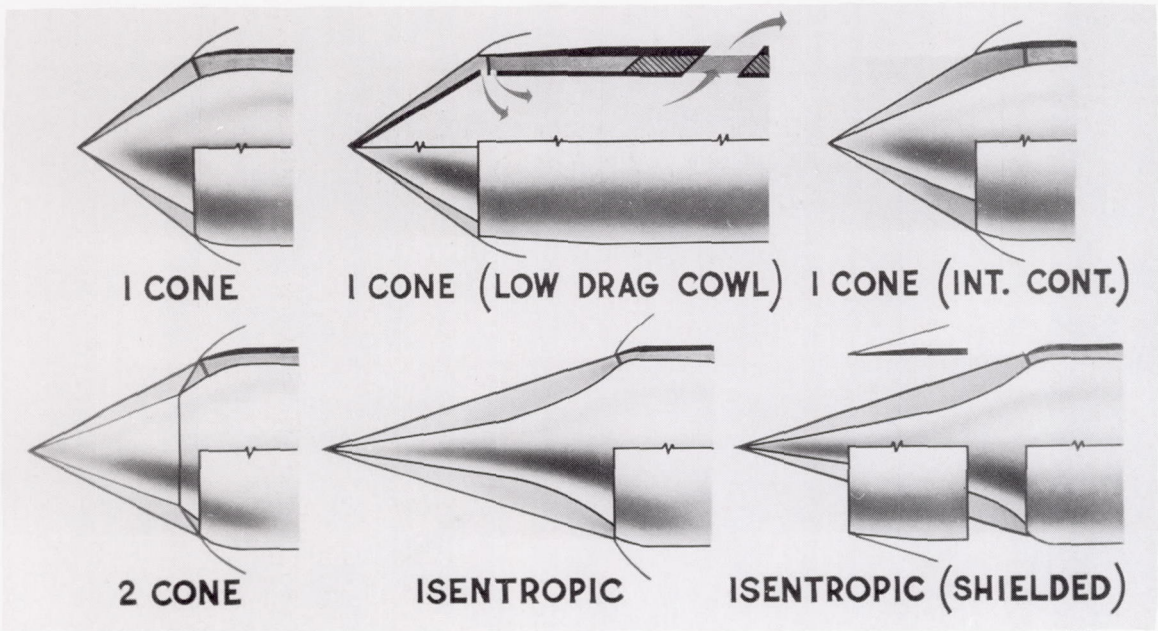

Figure 1. - Supersonic diffuser types.

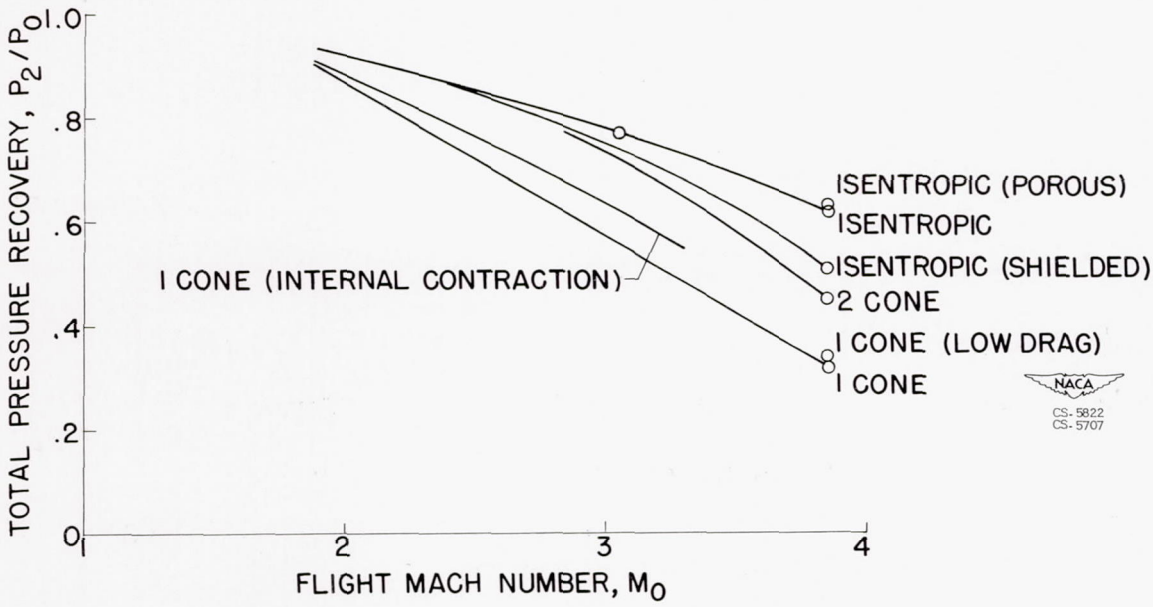

Figure 2. - Performance of supersonic diffuser types.

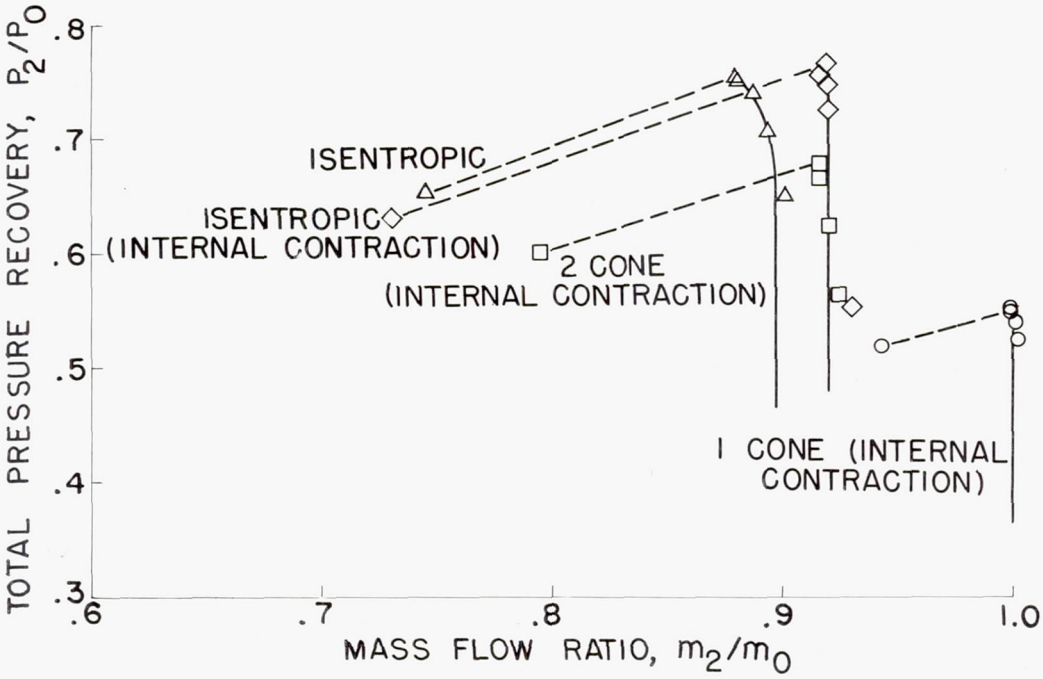

Figure 3. - Diffuser characteristics. Flight Mach number M_0, 3.05.

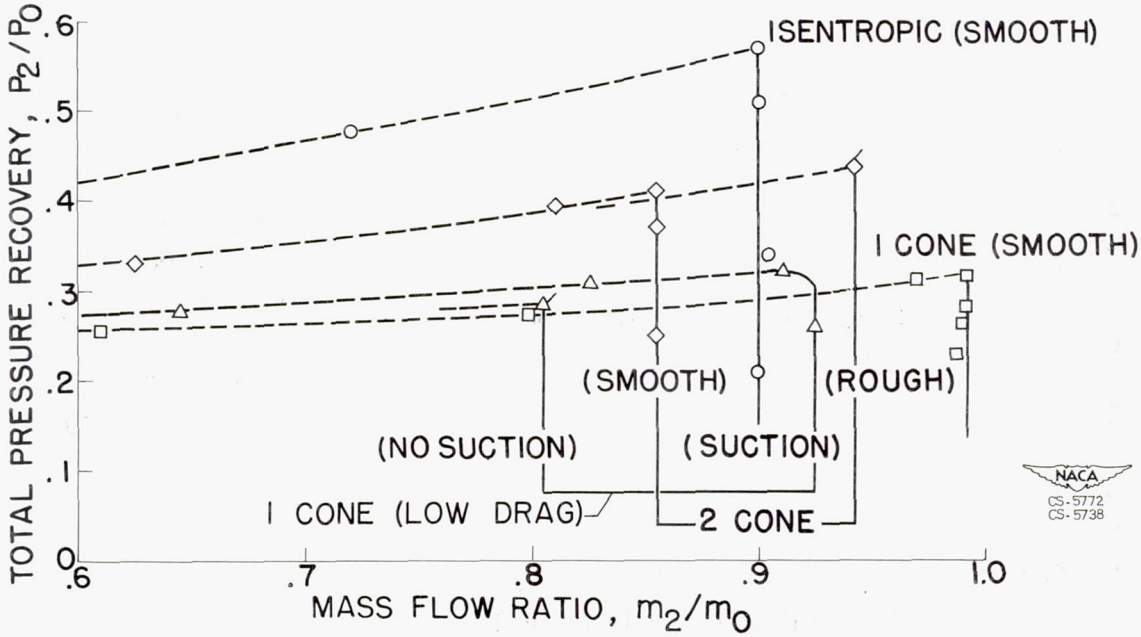

Figure 4. - Diffuser characteristics. Flight Mach number M_0, 3.85.

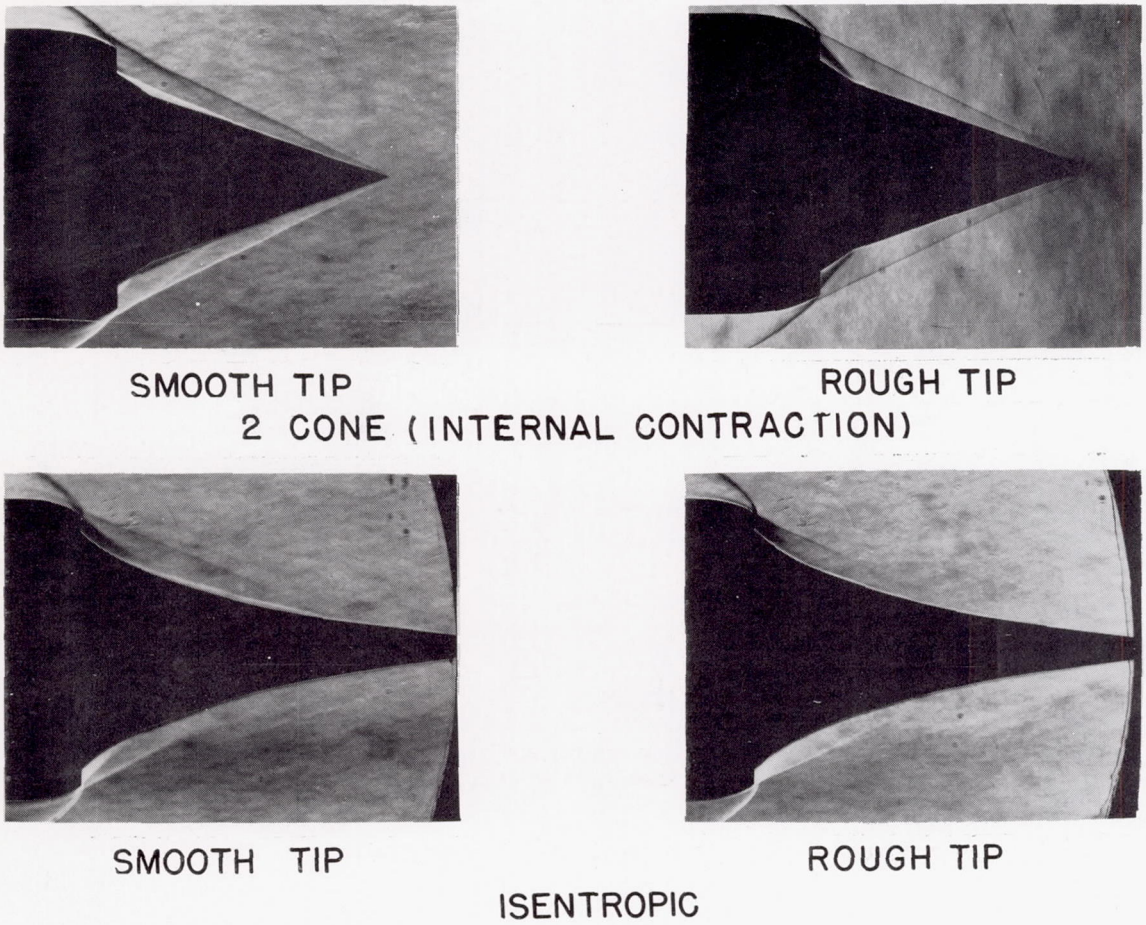

Figure 5. - Effect of tip roughness. Flight Mach number M_0, 3.85.

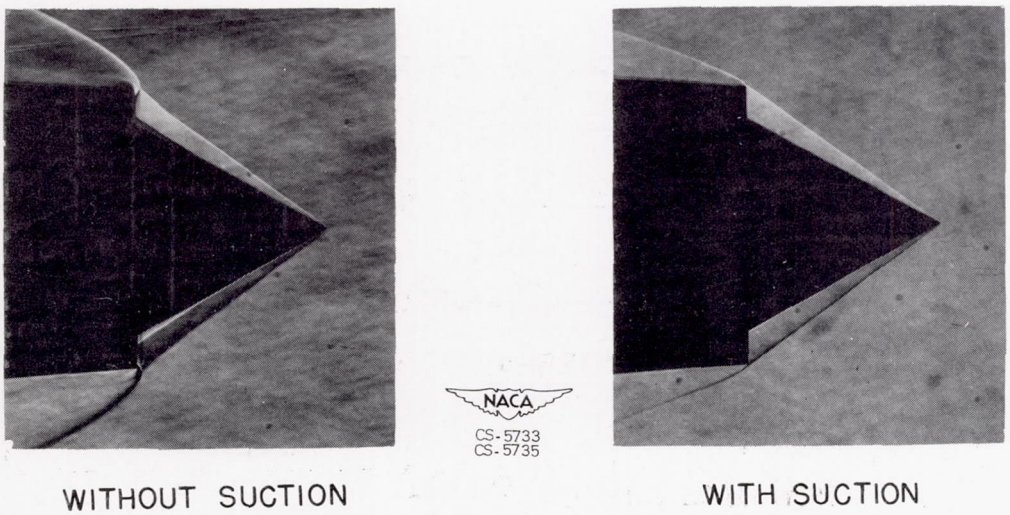

Figure 6. - Boundary-layer control on low-drag configuration. Flight Mach number M_0, 3.85.

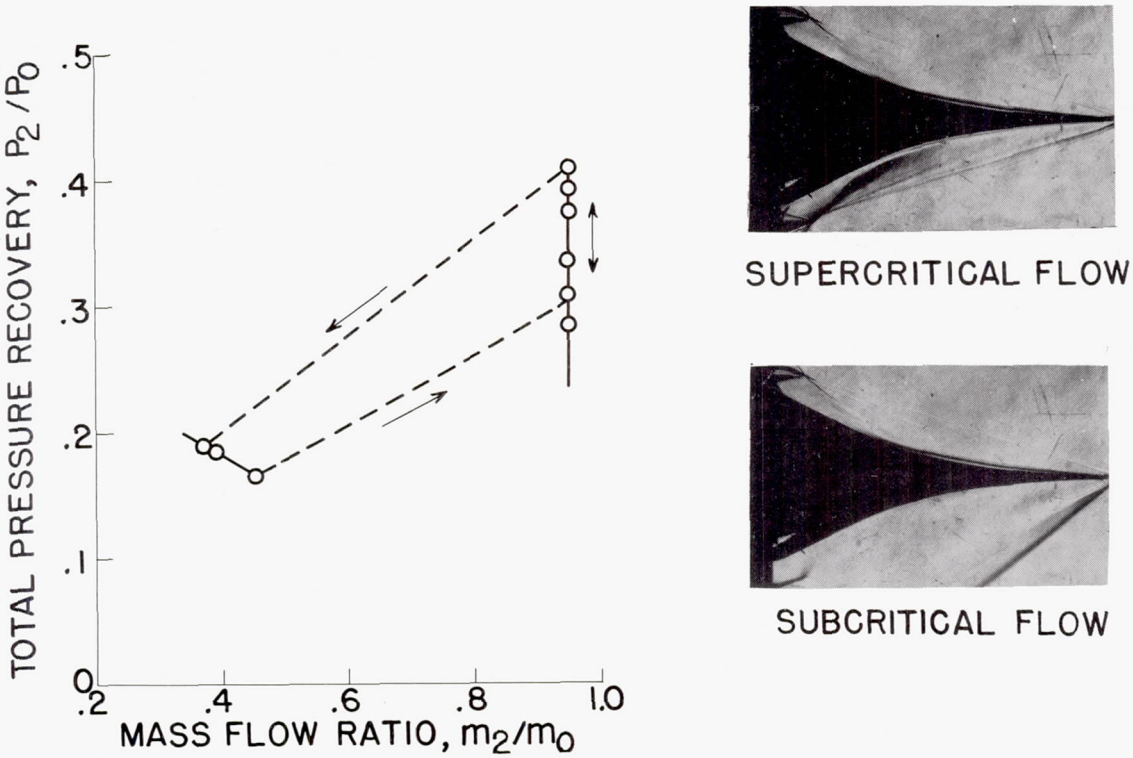

Figure 7. - Two-dimensional diffuser characteristics. Split-wing isentropic wedge; Flight Mach number M_0, 3.85.

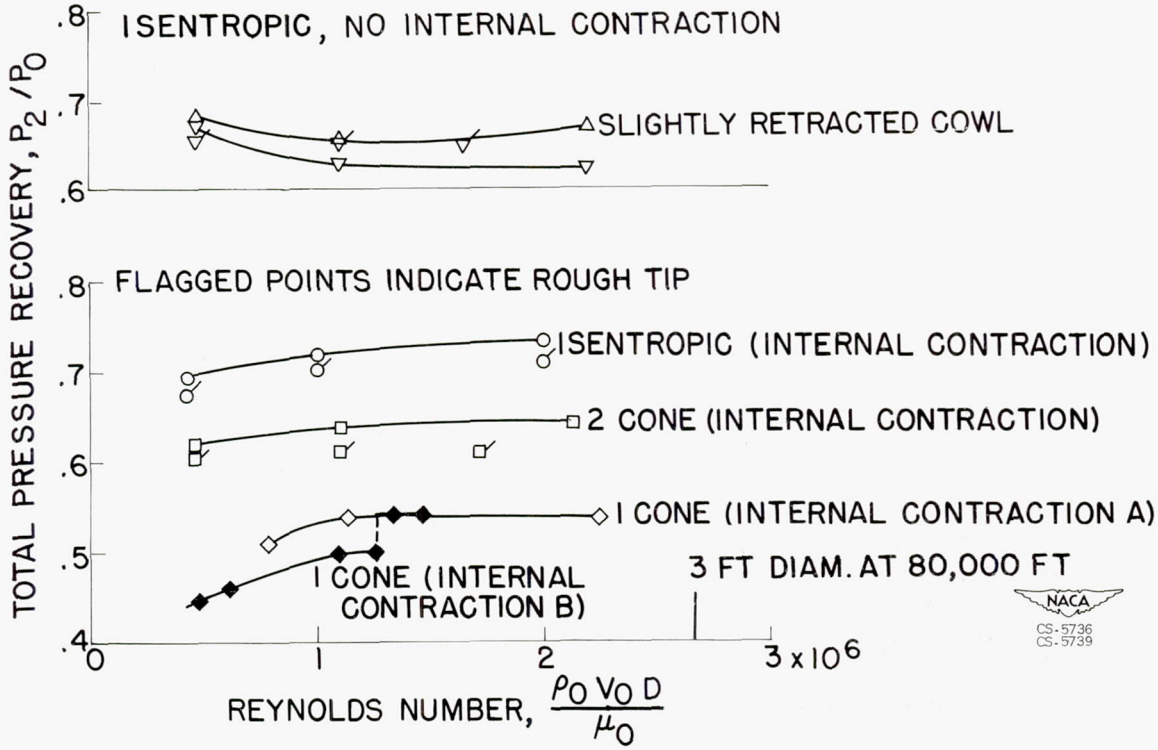

Figure 8. - Effect of Reynolds numbers. Flight Mach number M_0, 3.13.

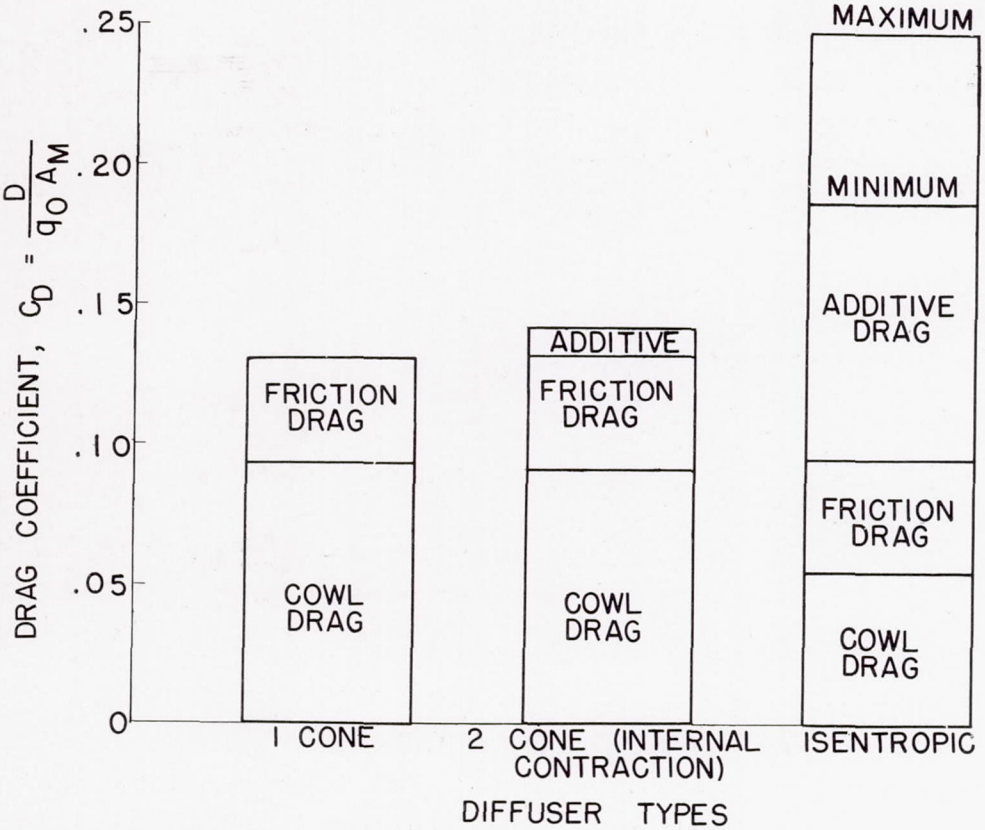

Figure 9. - Drags of ram jets with various inlets. Flight Mach number M_0, 3.85; fuel-air ratio, 0.024.

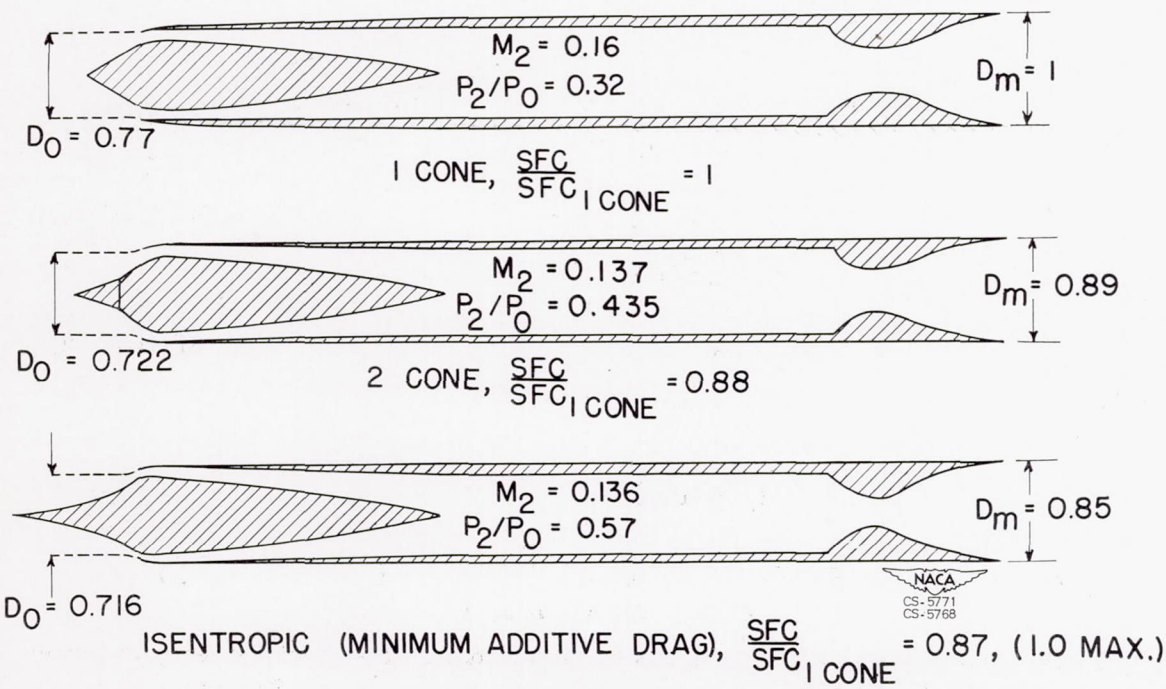

Figure 10. - Ram-jet engines utilizing various supersonic diffusers. Flight Mach number M_0, 3.85; fuel-air ratio, 0.024.

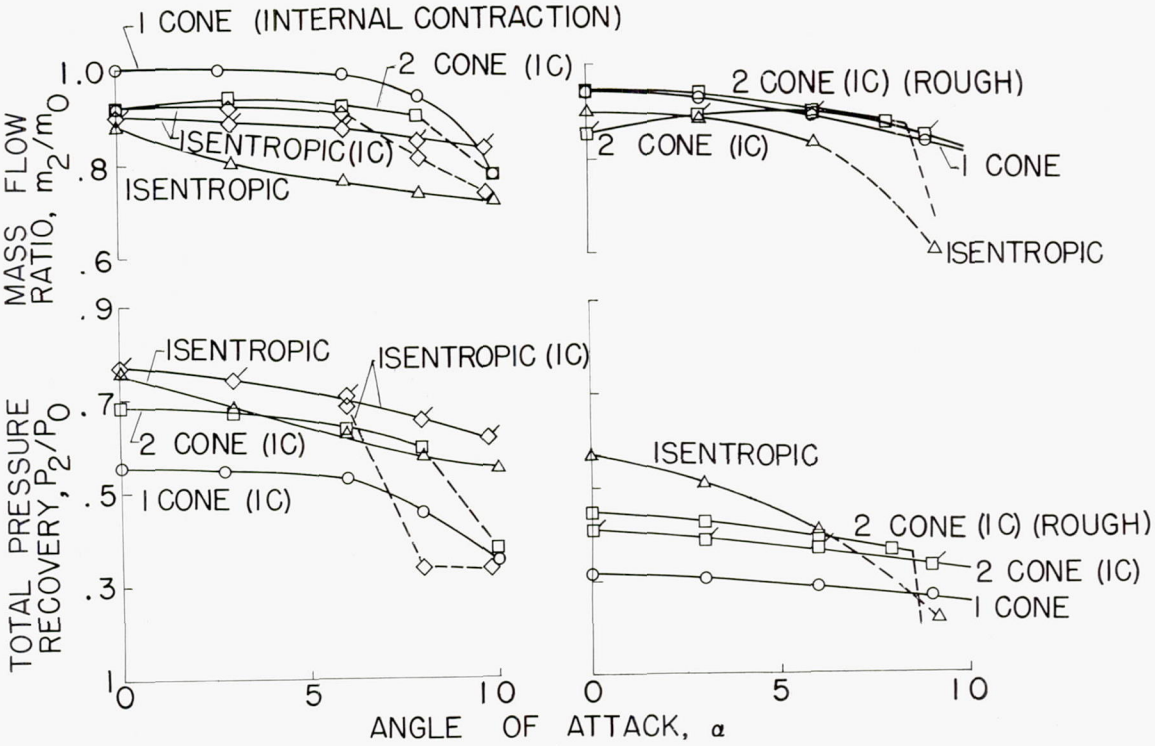

(a) Flight Mach number M_0, 3.05. (b) Flight Mach number M_0, 3.85.

Figure 11. - Angle of attack effects.

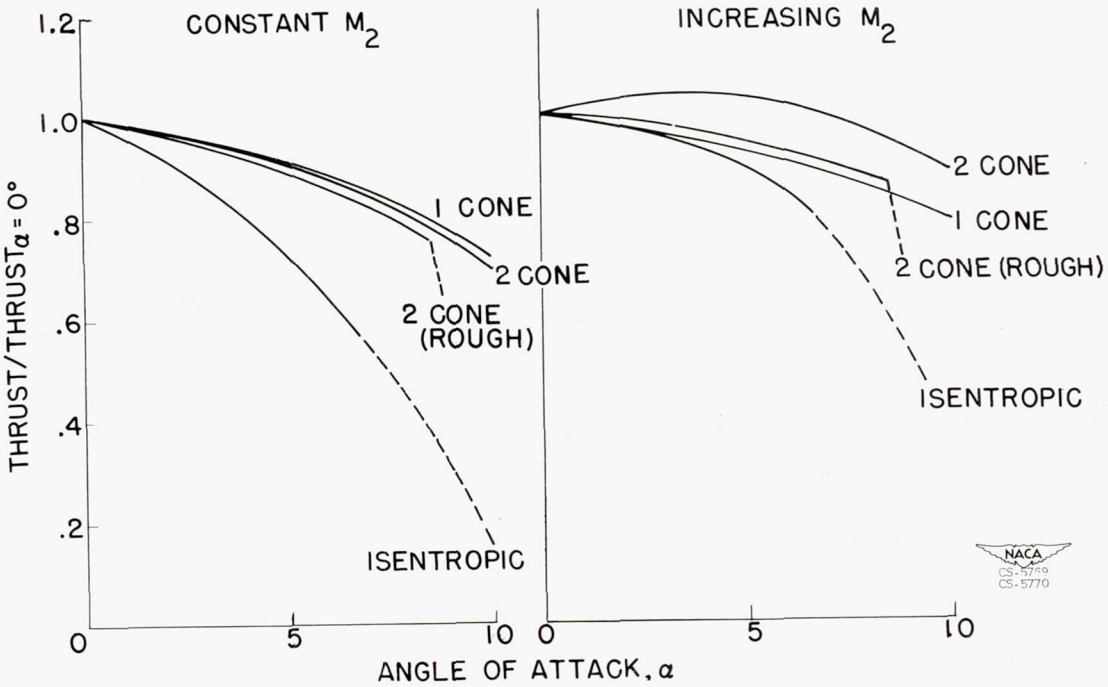

(a) Combustion-chamber-inlet Mach number M_2, constant. (b) Combustion-chamber-inlet Mach number M_2, increasing.

Figure 12. - Effect of angle of attack on thrust. Flight Mach number M_0, 3.85; fuel-air ratio, 0.024.

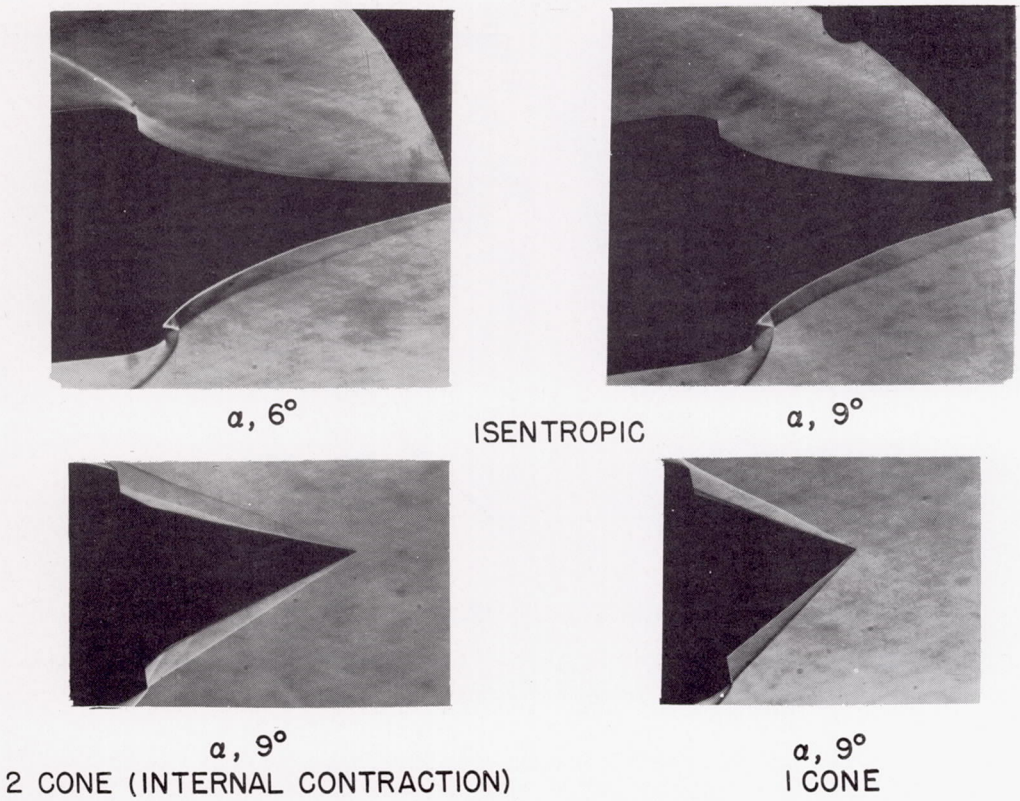

Figure 13. - Flow patterns at angle of attack.

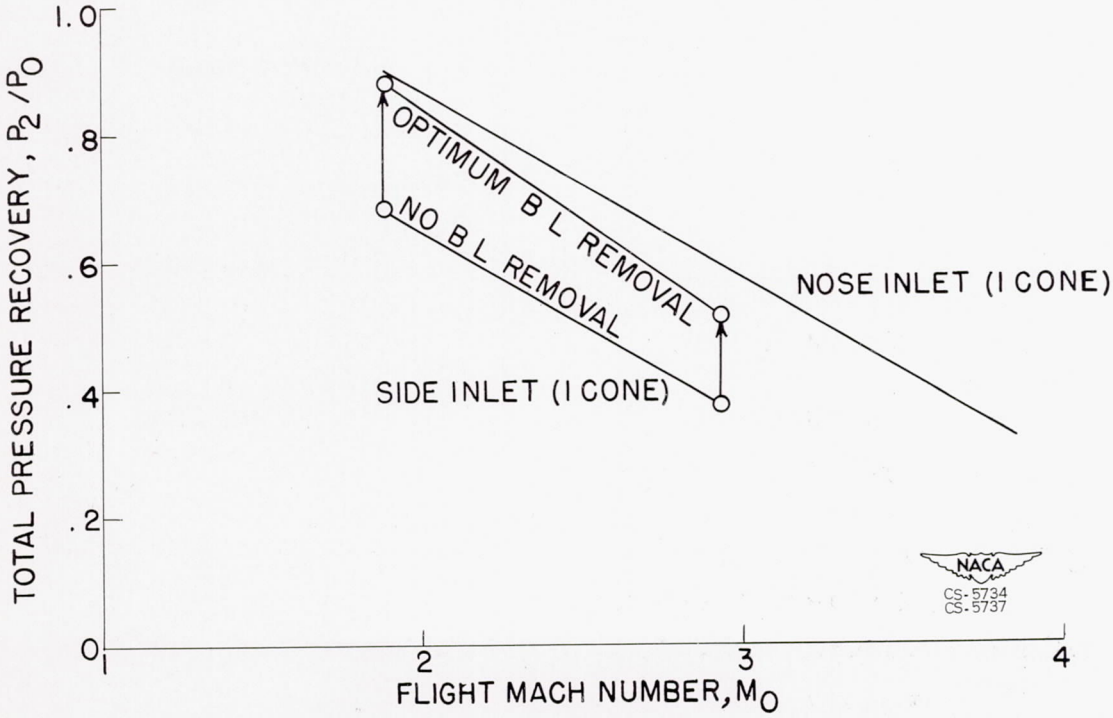

Figure 14. - Side inlet pressure recovery.

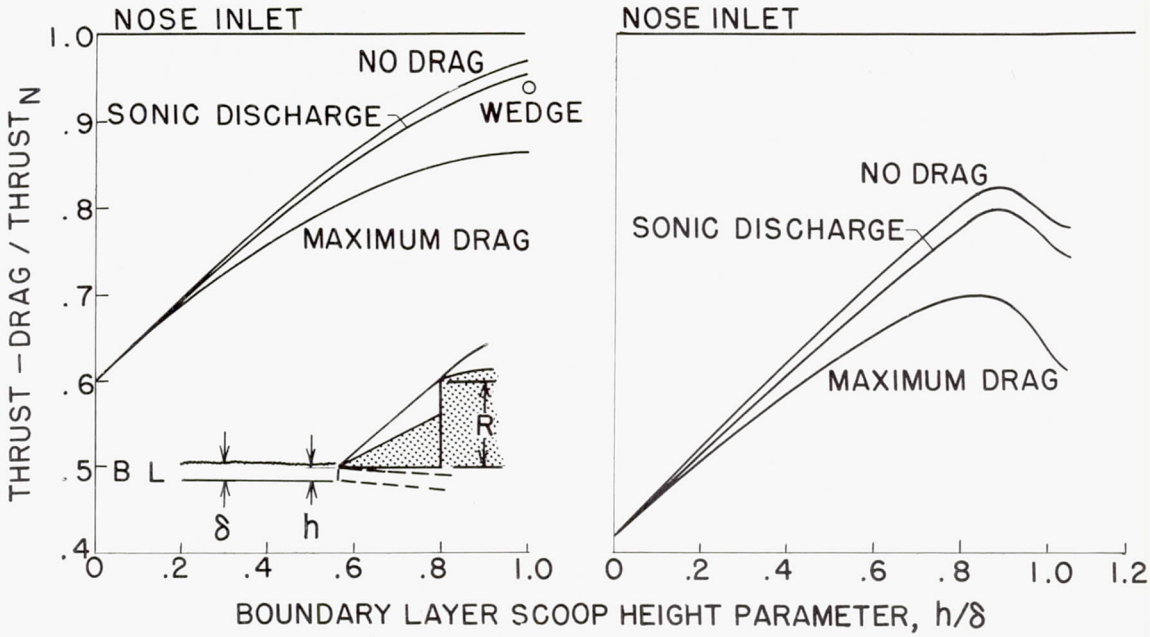

(a) Flight Mach number M_0, 1.88; ratio of boundary-layer thickness to inlet radius δ/R, 0.15.

(b) Flight Mach number M_0, 2.93, ratio of boundary-layer thickness to inlet radius δ/R, 0.16.

Figure 15. - Side inlet thrust.

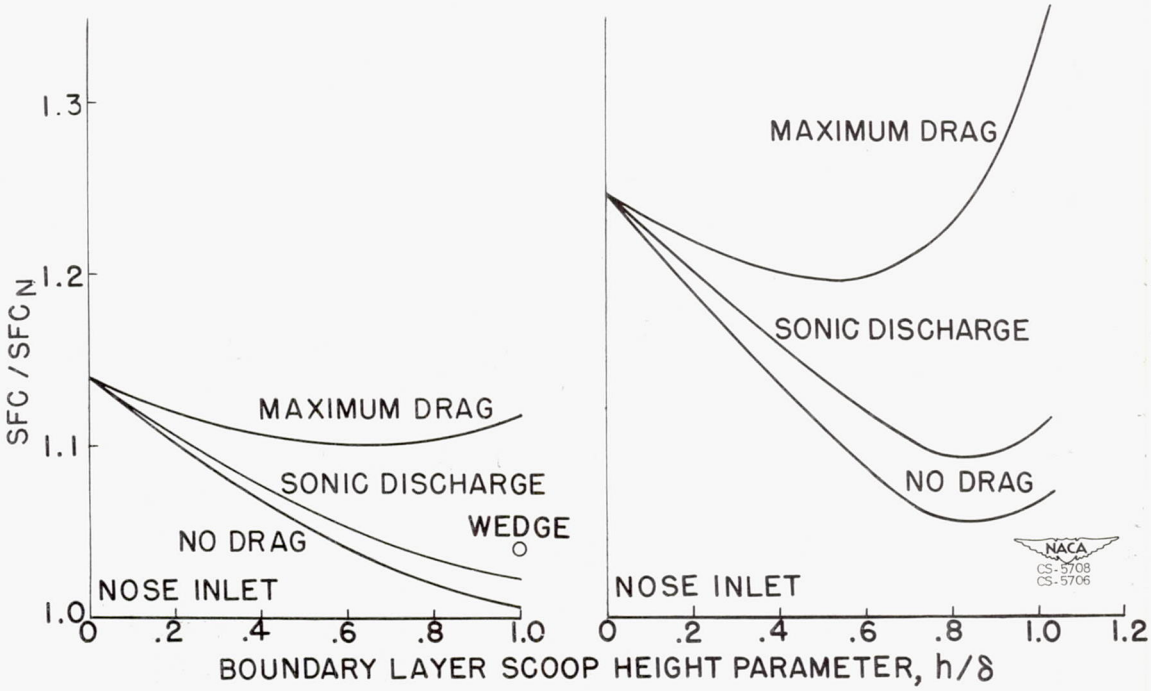

(a) Flight Mach number M_0, 1.88.

(b) Flight Mach number M_0, 2.93.

Figure 16. - Side inlet specific fuel consumption.