SECURITY INFORMATION

CONFIDENTIAL

N62 62247

Copy
RM L53H19a

NACA

RESEARCH MEMORANDUM

LOW-SPEED INVESTIGATION OF THE EFFECTS OF LOCATION OF A DELTA HORIZONTAL TAIL ON THE LONGITUDINAL STABILITY AND CONTROL OF A FUSELAGE AND THIN DELTA WING WITH DOUBLE SLOTTED FLAPS INCLUDING THE EFFECTS OF A GROUND BOARD

By John M. Riebe and Jean C. Graven, Jr.

Langley Aeronautical Laboratory
Langley Field, Va.

CLASSIFICATION CHANGED TO UNCLASSIFIED
AUTHORITY: NACA RESEARCH ABSTRACT NO. 10
DATE: AUGUST 28, 1956

CLASSIFIED DOCUMENT

This material contains information affecting the National Defense of the United States within the meaning of the espionage laws, Title 18, U.S.C., Secs. 793 and 794, the transmission or revelation of which in any manner to an unauthorized person is prohibited by law.

NATIONAL ADVISORY COMMITTEE FOR AERONAUTICS

WASHINGTON

October 15, 1953

CONFIDENTIAL

NATIONAL ADVISORY COMMITTEE FOR AERONAUTICS

RESEARCH MEMORANDUM

LOW-SPEED INVESTIGATION OF THE EFFECTS OF LOCATION OF A DELTA HORIZONTAL TAIL ON THE LONGITUDINAL STABILITY AND CONTROL OF A FUSELAGE AND THIN DELTA WING WITH DOUBLE SLOTTED FLAPS INCLUDING THE EFFECTS OF A GROUND BOARD

By John M. Riebe and Jean C. Graven, Jr.

SUMMARY

A low-speed wind-tunnel investigation was made to determine the effects of location of a delta horizontal tail on the longitudinal stability and control characteristics of a fuselage and thin delta wing with double slotted flaps. The wing, which was mounted on a high-speed fuselage, was a flat plate with beveled leading and trailing edges and had a maximum thickness ratio of 0.045, and 60° sweepback of the leading edge. The characteristics of the model in the proximity of a ground board were also determined.

Satisfactory locations of the delta tail for longitudinal stability of the model with double slotted flap deflected were generally below the wing chord line extended or at positions rearward of a tail length of 1.5 wing mean aerodynamic chord on the wing chord line extended. These tail positions were lower and farther to the rear than the region indicated in previous investigations as satisfactory with flaps retracted.

Tail-incidence tests indicated that the delta tail (which was 20 percent of the wing area), when at the optimum locations for longitudinal stability, would be capable of providing longitudinal trim throughout the lift-coefficient range with the double slotted flaps deflected.

Location of the delta wing near a ground board with double slotted flap deflected generally increased the lift-curve slope, lowered the drag at a given lift coefficient, and resulted in an increase of longitudinal stability at high lift coefficients. However, for some angles of attack, ground proximity resulted in a loss of lift coefficient at high flap deflections.

INTRODUCTION

Recent investigations by the National Advisory Committee for Aeronautics have indicated that the use of double slotted flaps on delta-wing airplanes should result in considerable reduction in the angle of attack necessary to obtain a given lift coefficient and produce some increase in the maximum lift coefficient. The primary purpose of these investigations was the attainment of flap-vane arrangements which produced high lift (refs. 1 and 2) and the determination of the effect of fuselage size (ref. 3). The investigations indicated that delta-wing airplanes with double slotted flaps would require a longitudinal trimming device to offset a diving moment resulting from flap deflection. Without high-lift flaps, a horizontal tail is generally not necessary as a stabilizing device on a delta-wing airplane because of the inherent stable pitching-moment characteristics of delta wings. A horizontal tail may, however, be desirable for longitudinal trim. Because of the large variations in downwash which exist behind delta wings (ref. 4), the location of a horizontal tail behind a delta wing with flaps might be expected to be critical.

The present report gives the results of an investigation to determine the effect of location of a delta horizontal tail on the longitudinal stability and control of a delta-wing—fuselage model with one of the better double-slotted-flap configurations of reference 2. No tail locations were investigated with flaps down that were not found to be satisfactory for the flap-retracted condition in the investigation of reference 5. The present investigation also included the effects of a ground board on the longitudinal aerodynamic characteristics.

COEFFICIENTS AND SYMBOLS

The results of the tests are presented as standard NACA coefficients of forces and moments about the stability axes. The positive directions of forces, moments, and angles are shown in figure 1. Pitching-moment coefficients are given about the wing 25-percent-mean-aerodynamic-chord point. The coefficients and symbols are defined as follows:

C_L lift coefficient, L/qS

C_D drag coefficient, D/qS

C_m pitching-moment coefficient, $M/qS\bar{c}$

L lift, lb

D	drag, lb
M	pitching moment, ft-lb
q	free-stream dynamic pressure, $\frac{1}{2}\rho V^2$, lb/sq ft
S	wing area, 6.91 sq ft
$\bar{c}$	wing mean aerodynamic chord, 2.31 ft, $\frac{2}{S}\int_0^{b/2} c^2 dy$
b	wing span, 3.75 ft
V	free-stream velocity, ft/sec
ρ	mass density of air, slugs/cu ft
δ_f	flap deflection measured in a plane perpendicular to hinge line, deg
δ_v	vane deflection measured in a plane perpendicular to hinge line, deg
α	angle of attack of wing, deg
c	local wing chord, ft
t	local wing thickness, ft
y	lateral distance from plane of symmetry measured parallel to y-axis, ft
z	vertical location of tail with respect to chord line extended, positive when located above chord line extended
l	distance of tail $0.25\bar{c}_t$ position back of wing $0.25\bar{c}$ position
i_t	incidence of horizontal tail, deg
ϵ	downwash angle, deg

Subscripts:

max	maximum
t	horizontal tail

MODEL AND APPARATUS

The model was tested on a single support strut in the Langley 300 MPH 7- by 10-foot tunnel.

The 60° delta wing (fig. 2(a) and table I) was the same as that used in references 1 to 3 with the exception of rounded tips and an outboard location of the flaps. The wing was made from a flat steel plate 5/8 inch thick, with beveled leading and trailing edges. The thickness ratio varied from 0.015 at the root to a maximum of 0.045 at $0.67b/2$. The mahogany fuselage (fig. 2(a)) had the same geometry as that used in the unified Langley wing program for supersonic flight.

The double-slotted-flap arrangement tested (fig. 2(c) and tables II and III) was one of the optimum configurations (ref. 2) with regard to lift effectiveness at both low and high angles of attack.

The delta tail tested on the model (fig. 2(b)) was constructed of 1/4-inch sheet aluminum with geometric characteristics similar to those of the delta wing and had an area equal to 20 percent of the wing area. The tail was located at the different positions by means of interchangeable fuselage afterbody blocks; positioning above and below the wing chord line extended (fig. 2(b)) was accomplished by supporting the tail on 1/2-inch steel vertical struts (fig. 2(a)).

For the ground-effect tests a 1-inch-thick board with a rounded leading edge was mounted $0.61\bar{c}$ below the center of moments of the model. The ground board extended 72 inches both ahead of and behind the $0.25\bar{c}$ location.

TESTS

The tests were made at a dynamic pressure of approximately 25 pounds per square foot, corresponding to an airspeed of about 100 miles per hour. The Reynolds number for this airspeed, based on the mean aerodynamic chord (2.31 ft), was approximately 2.2×10^{6}. The corresponding Mach number was 0.13. Angles of attack ranged from -15° to 33°. Delta-tail locations investigated were $1.0\bar{c}$, $1.5\bar{c}$, and $2.0\bar{c}$ behind the $0.25\bar{c}$ location on the wing chord line extended and $0.25\bar{c}$ above and $0.25\bar{c}$ below the wing chord line extended. A tail location $0.75\bar{c}$ above the chord line extended at a tail length of $1.0\bar{c}$ was also investigated (fig. 2(b)).

CORRECTIONS

Jet-boundary corrections, obtained from methods outlined in reference 6, have been applied to the angle of attack, the drag-coefficient, and the pitching-moment-coefficient data. No jet-boundary corrections have been applied to the ground-board data since the effects of the side walls were estimated to be small. Blocking corrections have been applied to the model according to the method of reference 7. A buoyancy correction has been applied to the data to account for a longitudinal static-pressure gradient in the tunnel.

RESULTS AND DISCUSSION

An outline of the figures of data presented in the report is as follows:

	Figure
Effect of flap deflection, tail off	3
Effect of location of the delta tail	4
Summary of the effect of delta-tail location on static longitudinal stability	5
Control effectiveness of the delta tail	6
Effective downwash angle for delta tail at $l = 2.0\bar{c}$ and $z = 0$	7
Estimated tail incidence required for trim and angle of tail at $l = 2.0\bar{c}$	8
Effect of flap deflection, tail off, near ground board	9
Variation of C_L with δ_f, near and away from ground board	10
Effect of location and incidence of the delta tail near ground board	11

Effect of flap deflection.- The lift, drag, and pitching-moment characteristics for the double slotted flap at various deflections (fig. 3) were generally similar to the longitudinal aerodynamic characteristics of a double slotted flap of reference 2 (vane flap unit E, pivot point X) which had the same configuration with the exception of fuselage dimensions and spanwise location of the flap. The increments of lift for the smaller flap deflections at low angles of attack were about the same for the two configurations. However, the maximum lift coefficients and the lift-coefficient increments near zero angle of attack for the higher flap deflections of the present investigation are somewhat less than the corresponding lift coefficients of the configuration reported in reference 2. These lower lift coefficients can be attributed to several sources: more outboard location of the flaps, differences in model support, and also

differences in fuselage geometry. A large part of the effect is believed to have resulted from the more outboard location of the present flap as compared with the arrangement of the model of reference 2. The more outboard location on the delta wing places the flap in a region which is known to have higher section-lift-curve slope and to stall at lower angles of attack than the inboard sections. Consequently, it might be expected that the lift effectiveness of the outboard flap would not hold to as high a flap-deflection angle as the inboard flap and that the gain in maximum lift coefficient over that of the plain wing would be less.

Results obtained with a similar configuration (unpublished) showed that extension of the flap span toward the wing tip resulted in an increase in lift coefficients near an angle of attack of 0° for the lower flap deflections but indicated no gain in maximum lift coefficients or lift coefficients near an angle of attack of 0° for the higher flap deflections.

Part of the reduction in maximum lift coefficient might also be attributed to the model support used. Unpublished results of another investigation have shown that larger maximum lift coefficients are obtained for a sting-type mounting (such as that of ref. 2) than for the strut type of mounting of the present investigation.

Another difference between the model of the present investigation and that of reference 2 is the difference in the ratio of fuselage diameter to wing-span ratio (0.195 for the present model and 0.095 for the model of ref. 2). The fuselage effect, however, is believed to be small since the loss of lift shown in reference 3 for the larger fuselages can be attributed mainly to a change in the span of the flap which occurred when the fuselage-diameter wing-span ratio increased.

Effect of location of the delta tail on longitudinal stability.- Satisfactory locations of the delta tail for longitudinal stability of the model with double slotted flaps deflected 52° were generally at positions rearward on the wing chord line extended or below the wing chord line extended (figs. 4 and 5). Location of the delta tail forward and above this region resulted in instability and undesirable nonlinearity of the pitching-moment curves. A flap deflection of 52° was selected for the tail-location investigation because previous (ref. 2) and present (figs. 3 and 10) tests have shown this flap angle to be one of the best with regard to lift effectiveness at both low and high angles of attack.

The approximate region (determined largely from ref. 5) at which location of delta tails behind plain delta wings resulted in nonlinearity of the pitching-moment curve and longitudinal instability over part of the lift-coefficient range is shown in figure 5. Comparison of the flap-retracted unstable region with the present data indicates that for satisfactory stability the horizontal tail has to be lower and farther to the rear for the flap-deflected condition than for the flap-retracted condition.

It has been shown (ref. 5) that the linearity of the pitching-moment curve and the degree of stability of a delta-wing model with flaps retracted could be attributed largely to differences in the rate of change of downwash angle with angle of attack. Changes in dynamic pressure at the tail were found to have a minor effect.

Surveys of the flow field behind delta wings by means of tuft grids have indicated that deflection of trailing-edge flaps produces a general downward displacement of the vortex system. These facts in addition to the difference in tail-off curves (for the flaps retracted and deflected) account for the difference in extent of the region of unsatisfactory tail location.

The variation of effective downwash angle with angle of attack is shown in figure 7 for the model with delta tail located at $2.0\bar{c}$ on the wing chord line extended. These effective downwash angles were computed from tail-off and tail-incidence data of figure 6. Above an angle of attack of 4°, these data show a reduction of effective downwash angle which caused the tail located in this position to provide a large stabilizing effect which overcame the unstable break of the pitching-moment curve of the wing-fuselage combination above an angle of attack of 4° shown in figure 3. Figures 3 and 4(a) show a general similarity of the pitching-moment curve for the model with high forward tail position to the model with tail off. This similarity indicates that this tail location behind the delta wing is generally outside the vortex region behind the delta wing. An early investigation of double slotted flaps (ref. 1) which had a different vane than that of the present investigation and reference 2, did not have an unstable break in the pitching-moment curve at the stall with tail off. It therefore may be possible to have longitudinally stable configurations with the tail in a high forward position or at positions higher than those indicated in the present investigation with a vane geometry different from the one used here.

Control effectiveness of the delta tail at good locations for longitudinal stability.- When located at one of the better locations for longitudinal stability ($l = 2.0\bar{c}$, $z = 0$), the delta tail would probably be capable of providing longitudinal trim through the lift-coefficient range as indicated by the tail-incidence data of figure 6. Extrapolation of the data to more negative tail-incidence angles and computation of the tail angle of attack (fig. 8) indicates that the required tail deflection for trim would be considerably below the stall angle of attack of the tail. Neutral longitudinal stability or slight instability, however, would probably be present in the intermediate lift-coefficient range. For tail locations below the wing chord line extended, a more stable variation of i_t required to trim with C_L can be expected because of a more stable pitching-moment curve. The i_t to trim for this condition (fig. 8)

was estimated by applying the same tail effectiveness to the low tail position that was found for the wing-chord-line-extended position.

Effect of double-slotted-flap deflection near ground board, tail off.- The data of figure 9 indicate that location of the model near a ground board with the tail off and the double slotted flap deflected generally resulted in an increase in longitudinal stability at the high lift coefficients, increased lift curve slope, and lower drag at a given lift coefficient. These results were somewhat similar to the effects of ground proximity on other flaps and wing plan forms (ref. 8). The change in lift coefficient at a given angle of attack caused by location of the model near the ground board was dependent upon the angle of flap deflection (figs. 9 and 10). For some angles of attack and for the highest flap deflection tested, ground proximity resulted in a loss of lift coefficient. These reductions in lift coefficient, however, generally occurred for flap deflections which were beyond the flap-deflection angle for largest lift effectiveness (about $\delta_f = 52^{\circ}$).

Effect of location and incidence of the delta tail near ground board.- The usual effects of ground proximity on an airplane with a horizontal tail were indicated in the present investigation. For two delta tail locations investigated ($z = 0$ and $z = -0.25\bar{c}$ at $l = 1.5\bar{c}$) with the double slotted flap deflected 52°, location near the ground board resulted in a slight increase in lift coefficient at a given angle of attack and an increase in longitudinal stability (fig. 11). Figure 11(b) indicates that the configuration ($l = 1.5\bar{c}$ and $z = 0$) which had some longitudinal instability away from the ground through part of the high-lift-coefficient range generally became longitudinally stable through the entire angle-of-attack range near the ground. In the high angle-of-attack range, the slight gain in lift coefficients near the ground will be nullified by the increased download on the tail required to trim out the increased diving moments.

With the tail length of $1.5\bar{c}$ and with the tail effectiveness indicated by figure 11(a), the tail tested will probably be unable to provide longitudinal trim for the model in the high angle-of-attack range near the ground. However, other considerations of delta-wing airplanes may also limit the angle-of-attack range available near the ground. For example, the long fuselages being considered for some airplanes will limit the angle of attack near the ground to low values.

CONCLUSIONS

A low-speed wind-tunnel investigation to determine the effects of location of a delta horizontal tail on the longitudinal stability and control characteristics of a fuselage and a thin delta wing with double slotted flaps indicated the following conclusions:

1. Satisfactory locations of the delta tail for longitudinal stability of the model with double slotted flap deflected were generally below the wing chord line extended or at positions rearward of a tail length of 1.5 wing mean aerodynamic chord on the wing chord line extended. These tail positions were lower and farther to the rear than the region indicated in previous investigations as satisfactory with flaps retracted.

2. The delta tail (which was 20 percent of the wing area), when at the optimum locations for longitudinal stability, would be capable of providing longitudinal trim throughout the lift-coefficient range with the double slotted flaps deflected.

3. Location of the delta wing near a ground board (with double slotted flaps deflected) generally increased the lift-curve slope, lowered the drag at a given lift coefficient, and resulted in an increase of longitudinal stability at high lift coefficients. At high flap deflections for some angles of attack, however, ground proximity resulted in a loss of lift coefficient and stability.

Langley Aeronautical Laboratory,
National Advisory Committee for Aeronautics,
Langley Field, Va., August 17, 1953.

REFERENCES

1. MacLeod, Richard G.: A Preliminary Low-Speed Wind-Tunnel Investigation of a Thin Delta Wing Equipped With a Double and a Single Slotted Flap. NACA RM L51J26, 1952.

2. Riebe, John M., and MacLeod, Richard G.: Low-Speed Wind-Tunnel Investigation of a Thin 60° Delta Wing With Double Slotted, Single Slotted, Plain, and Split Flaps. NACA RM L52J29, 1953.

3. Riebe, John M.: The Effects of Fuselage Size on the Low-Speed Longitudinal Aerodynamic Characteristics of a Thin 60° Delta Wing With and Without a Double Slotted Flap. NACA RM L52L29a, 1953.

4. Newman, Ernest E., Cahill, Jones F.: Investigation at Low Speed of the Flow Field Behind the Lifting Surfaces of a Model Equipped With a 60° Triangular Wing and a 60° Triangular Canard Tail. NACA RM L53C30, 1953.

5. Jaquet, Byron M.: Effects of Horizontal-Tail Position, Area, and Aspect Ratio on Low-Speed Static Longitudinal Stability and Control Characteristics of a 60° Triangular-Wing Model Having Various Triangular-All-Movable Horizontal Tails. NACA RM L51I06, 1951.

6. Gillis, Clarence L., Polhamus, Edward C., and Gray, Joseph L., Jr.: Charts for Determining Jet-Boundary Corrections for Complete Models in 7- by 10-Foot Closed Rectangular Wind Tunnels. NACA L-123, 1945. (Formerly NACA ARR L5G31)

7. Herriot, John G.: Blockage Corrections for Three-Dimensional-Flow Closed-Throat Wind Tunnels, With Consideration of the Effect of Compressibility. NACA Rep. 995, 1950. (Supersedes NACA RM A7B28)

8. Recant, Isidore G.: Wind-Tunnel Investigation of Ground Effect on Wings With Flaps. NACA TN 705, 1939.

TABLE I.- PHYSICAL CHARACTERISTICS OF THE TEST MODEL

Wing:	
Span, ft	4.00
Aspect ratio	2.31
Thickness of flat plate (maximum thickness ratio, 0.045), in.	5/8
Sweep, deg	60.00
Area, sq ft	6.93
Mean aerodynamic chord, ft	2.31
Leading-edge bevel angle, deg	6.8
Trailing-edge bevel angle, deg	8.0
Taper ratio	0
Vane:	
Span, ft	2.98
Chord, ft	0.13
Chord, percent wing root chord	3.6
Chord, percent flap chord	27.3
Flap:	
Span, ft	2.98
Chord, ft	0.46
Chord, percent wing root chord	13.2
Area, sq ft	1.03
Area, percent wing area	14.83
Trailing-edge bevel angle, deg	8.00
Horizontal tail:	
Span, ft	1.79
Aspect ratio	2.31
Thickness of flat plate (maximum thickness ratio, 0.045), in.	1/4
Sweep, deg	60.00
Area, sq ft	1.39
Area, percent wing area	20.0
Mean aerodynamic chord, ft	1.03
Leading-edge bevel angle, deg	6.0
Taper ratio	0
Trailing-edge bevel angle, deg	7.3

TABLE II.- ORDINATES OF THE LEADING EDGE OF THE TRAILING-EDGE FLAP

[All dimensions are in inches]

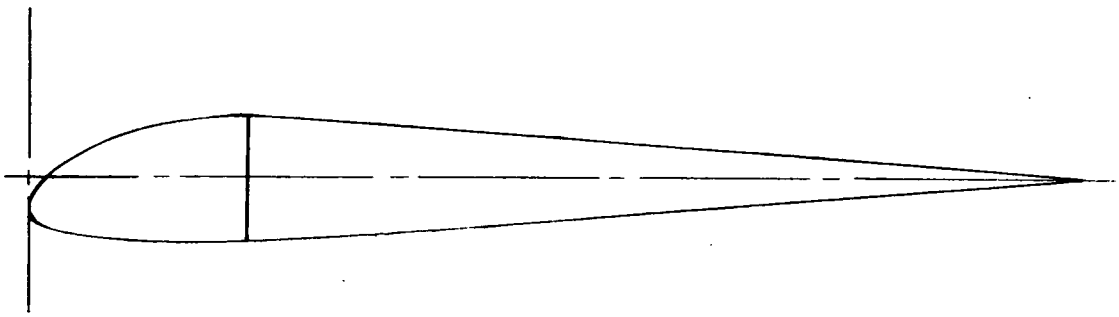

Station, x	Upper surface, y	Lower surface, y
0	-0.15	-0.15
.1	.01	-.25
.2	.08	-.27
.4	.18	-.29
.6	.25	-.30
.8	.30	-.31
1.1	.31	-.31

TABLE III.- ORDINATES OF THE VANE

[All dimensions are in inches]

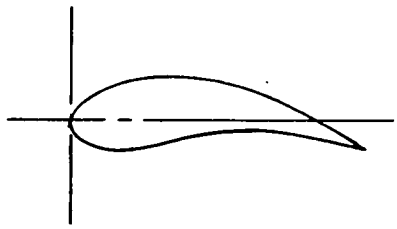

Station, x	Lower surface, y	Upper surface, y
0	0	0
.025	-.067	.051
.075	-.105	.100
.125	-.125	.130
.175	-.139	.153
.225	-.145	.175
.275	-.145	.190
.325	-.138	.205
.400	-.125	.219
.500	-.099	.221
.600	-.074	.215
.700	-.055	.205
.800	-.044	.180
.900	-.039	.153
1.000	-.042	.115
1.100	-.050	.075
1.200	-.066	.025
1.300	-.083	-.032
1.400	-.105	-.083
1.500	-.153	-.153

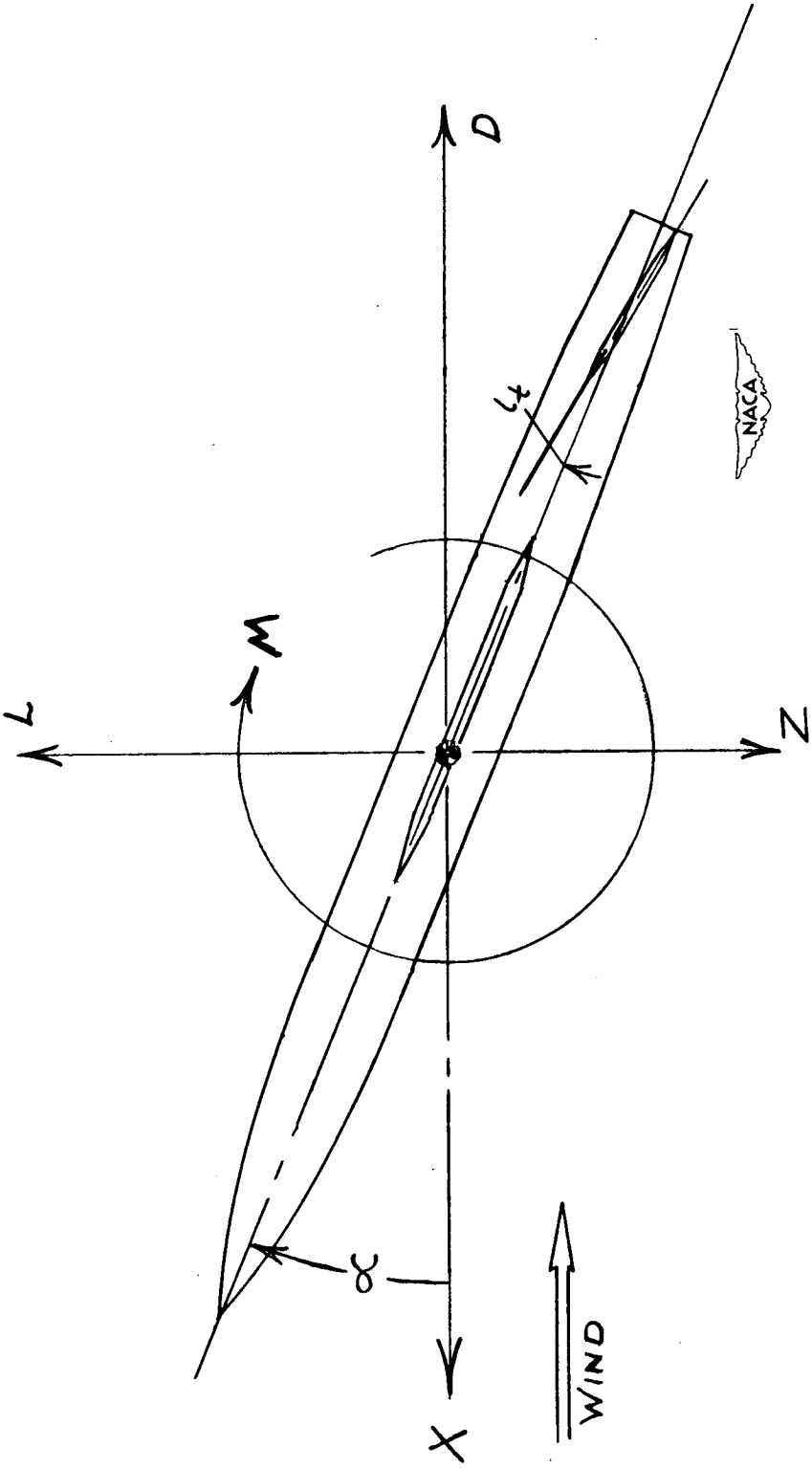

Figure 1.- System of stability axes. Positive values of forces, moments, and angles are indicated by arrows.

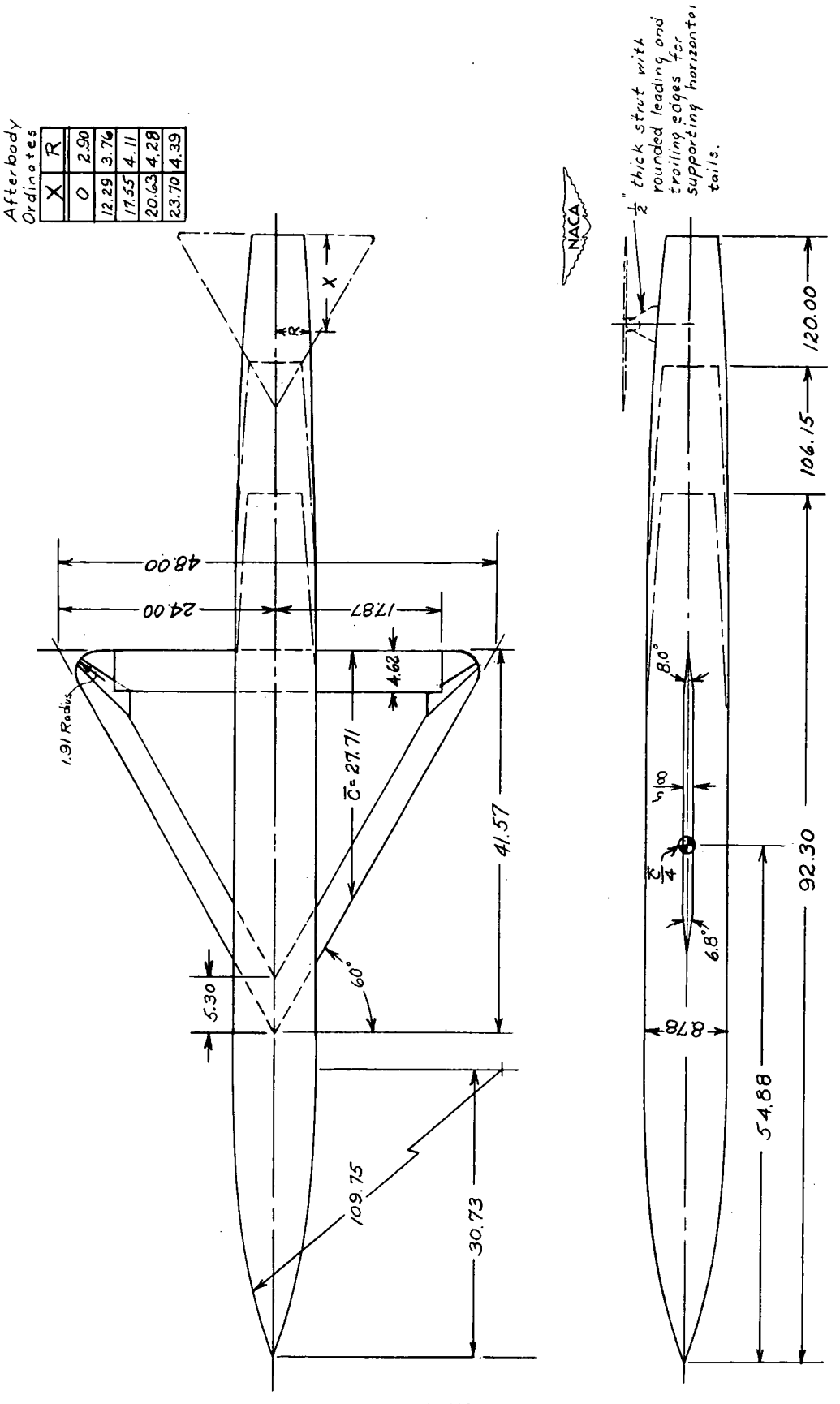

(a) Details of fuselage and wing.

Figure 2.- General arrangement of the wing, fuselage, horizontal tail, and tail location tested. (All dimensions are in inches except where noted.)

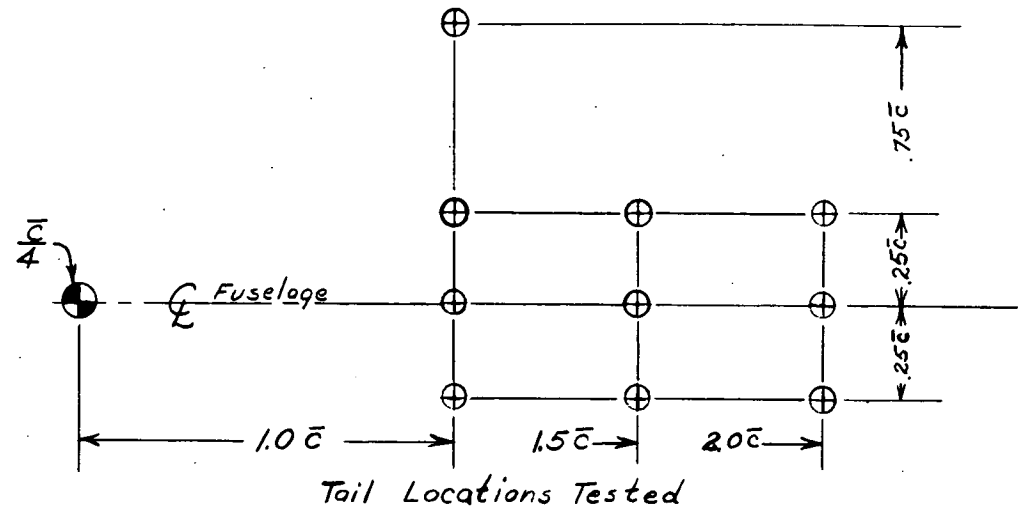

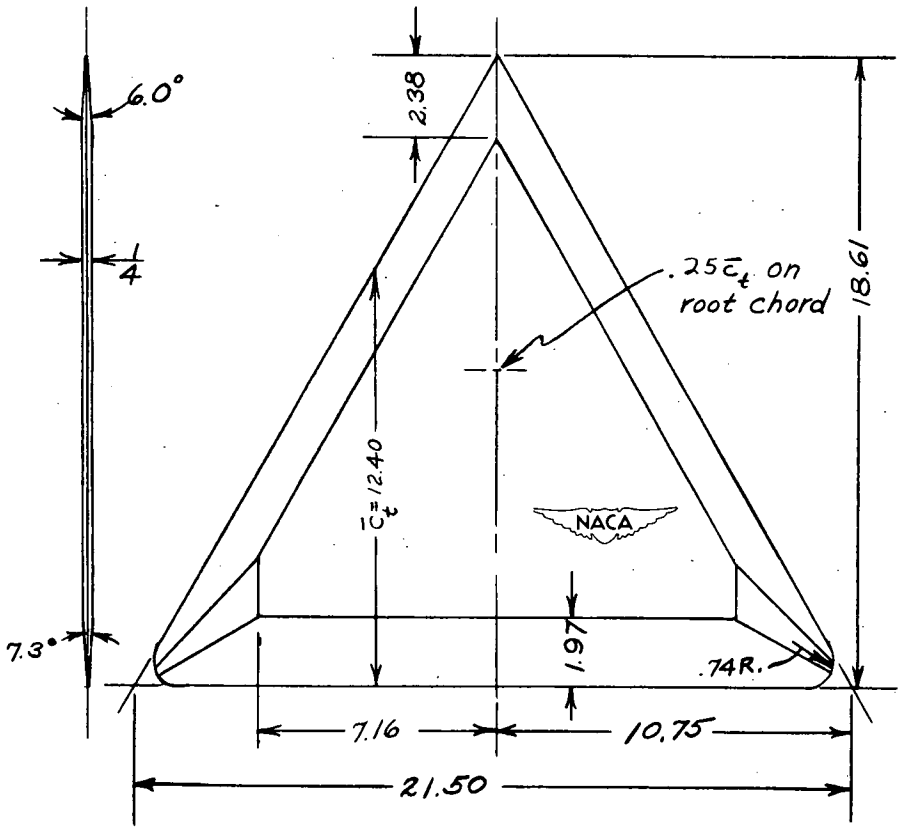

(b) Horizontal-tail locations tested and details of horizontal tail.

Figure 2.- Continued.

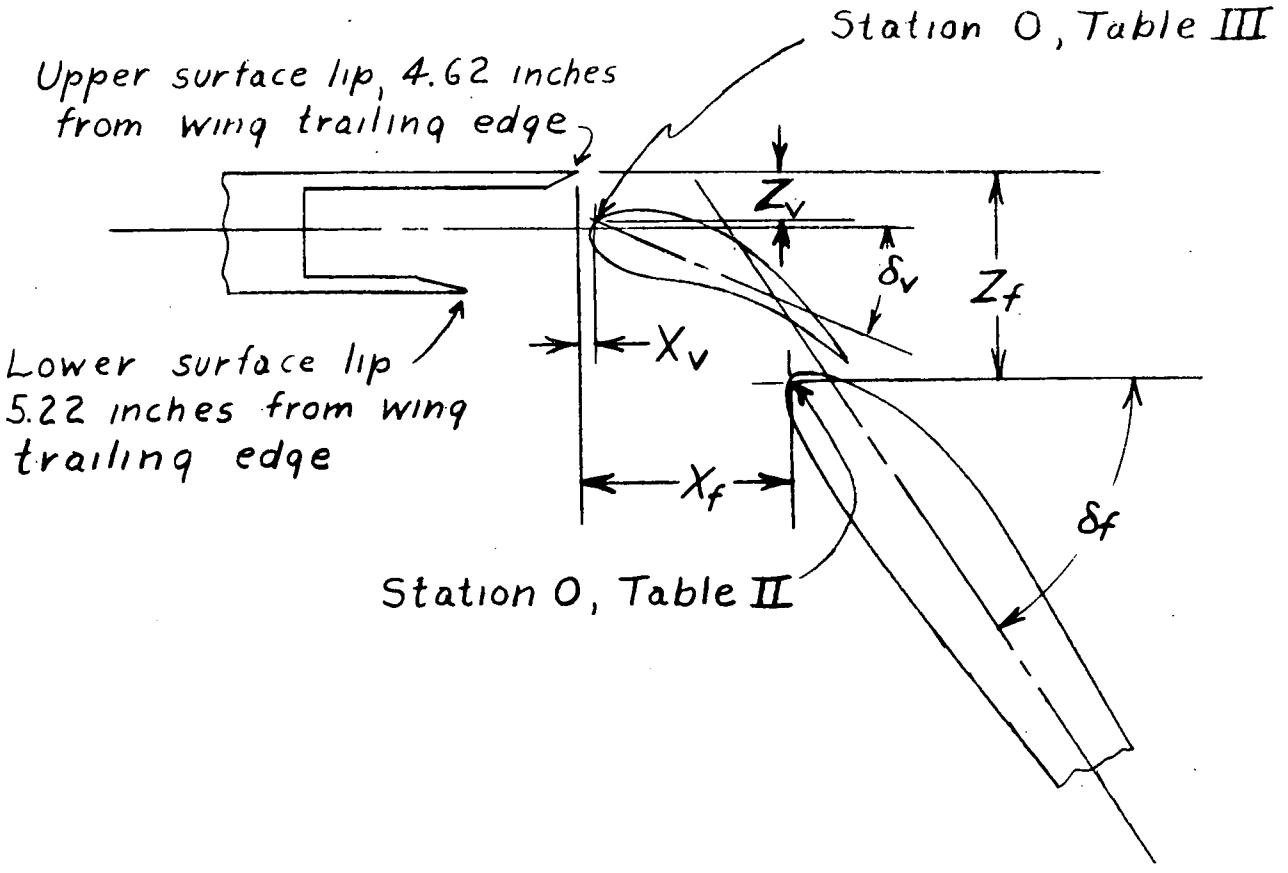

δ_F	X_f, inches	Z_f, inches	δ_v	X_v, inches	Z_v, inches
33°	-1.35	.89	3°	-.06	.31
40°	-1.29	.96	7°	-.06	.28
47°	-1.21	1.05	17°	-.06	.27
52°	-1.15	1.13	22°	-.06	.27
57°	-1.10	1.21	27°	-.06	.26

(c) Details of double slotted flap. The values of x measured from the wing upper lip are positive in the upstream direction and the values of z measured from the wing upper lip are positive in a direction toward the lower wing surface (similar to the positive directions for the stability axes, fig. 1).

Figure 2.- Concluded.

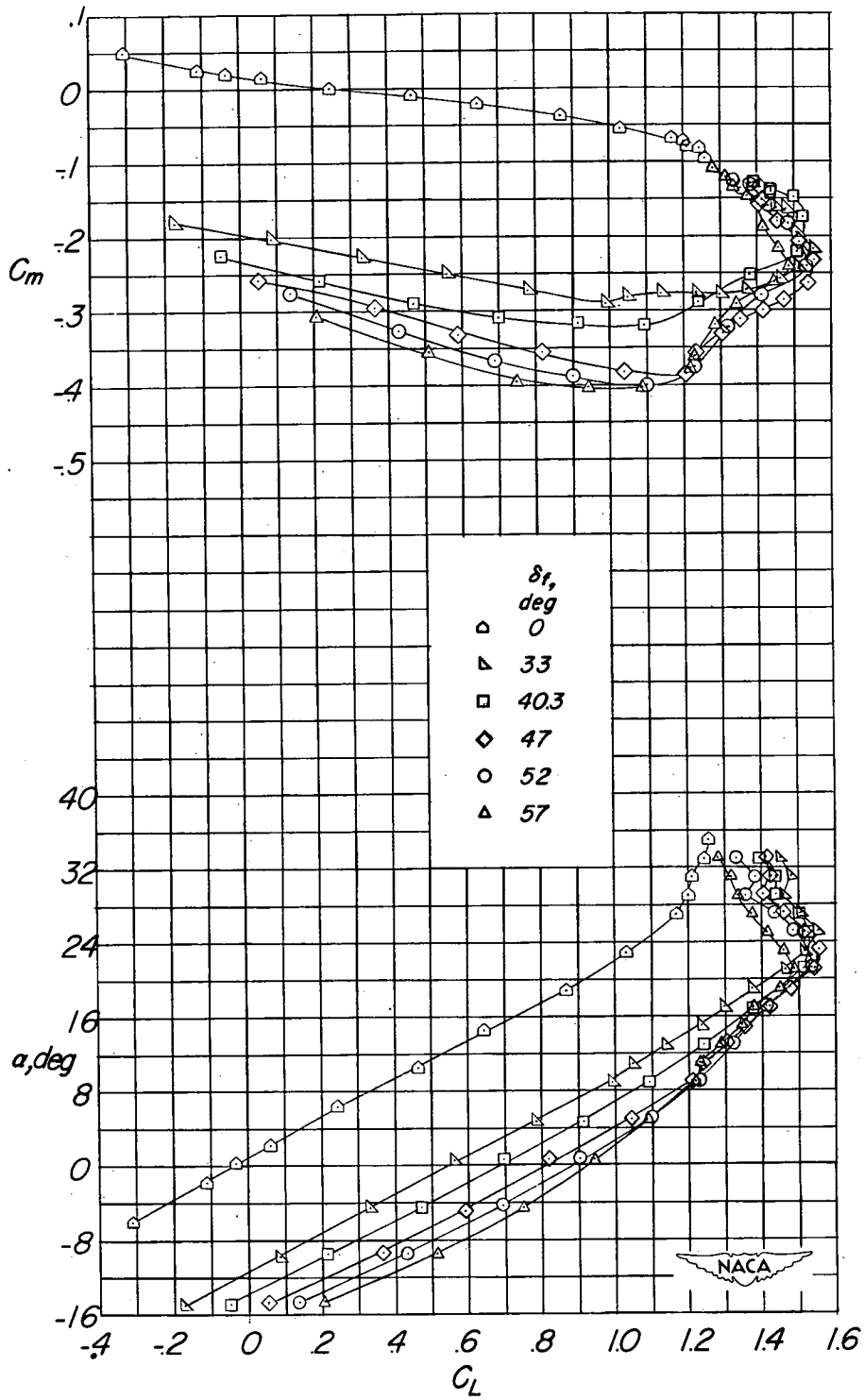

Figure 3.- Effect of deflection of the double slotted flap on the longitudinal aerodynamic characteristics in pitch of the delta-wing—fuselage model, tail off; fuselage with $1.0\bar{c}$ afterbody. ($\delta_f = 0^{\circ}$ configuration with $1.5\bar{c}$ afterbody.)

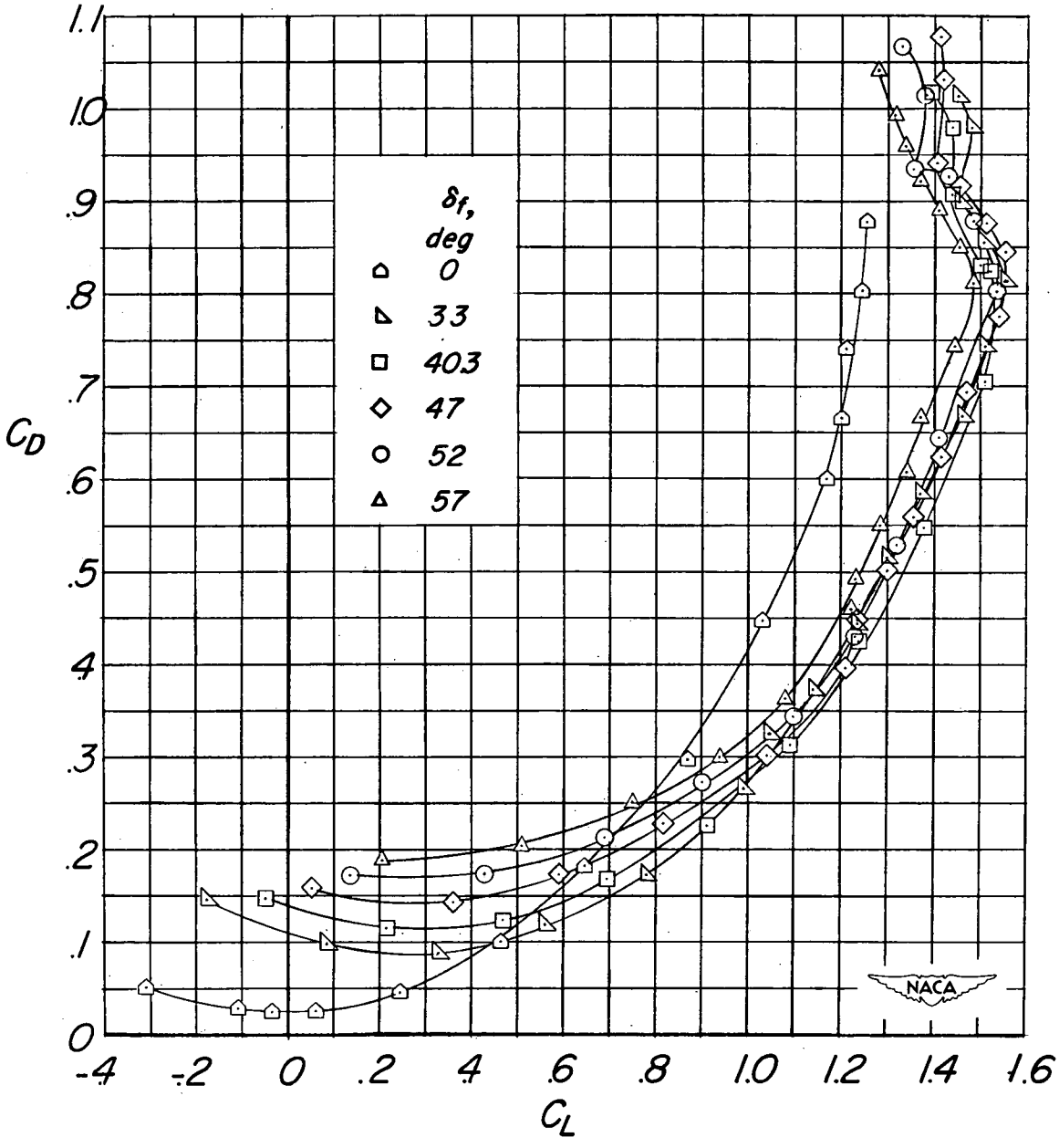

Figure 3.- Concluded.

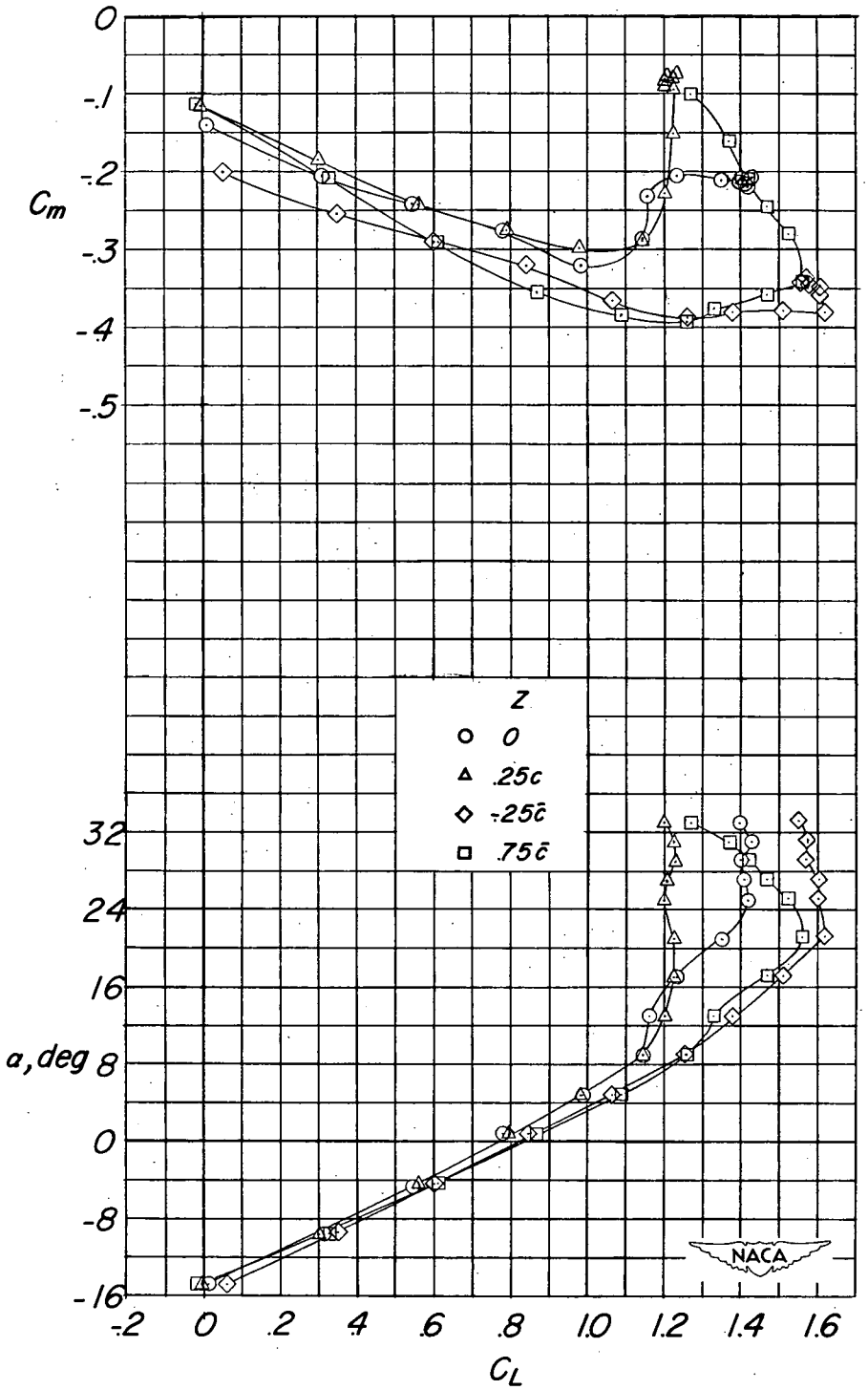

(a) $l = 1.0\bar{c}$.

Figure 4.- Effect of location of the horizontal delta tail on the longitudinal aerodynamic characteristics in pitch of the delta-wing—fuselage model with double slotted flap deflected 52°.

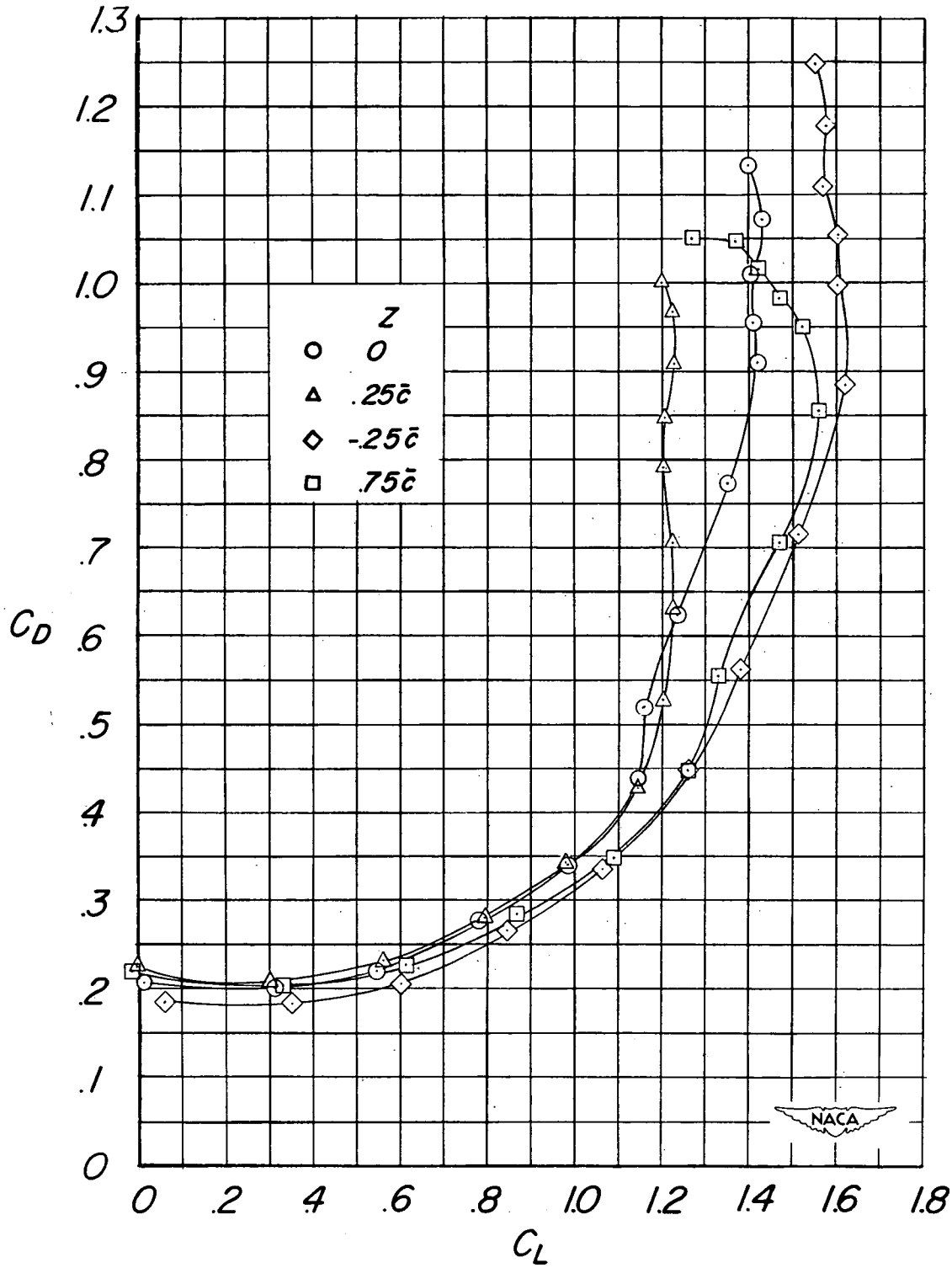

(a) Concluded.

Figure 4.- Continued.

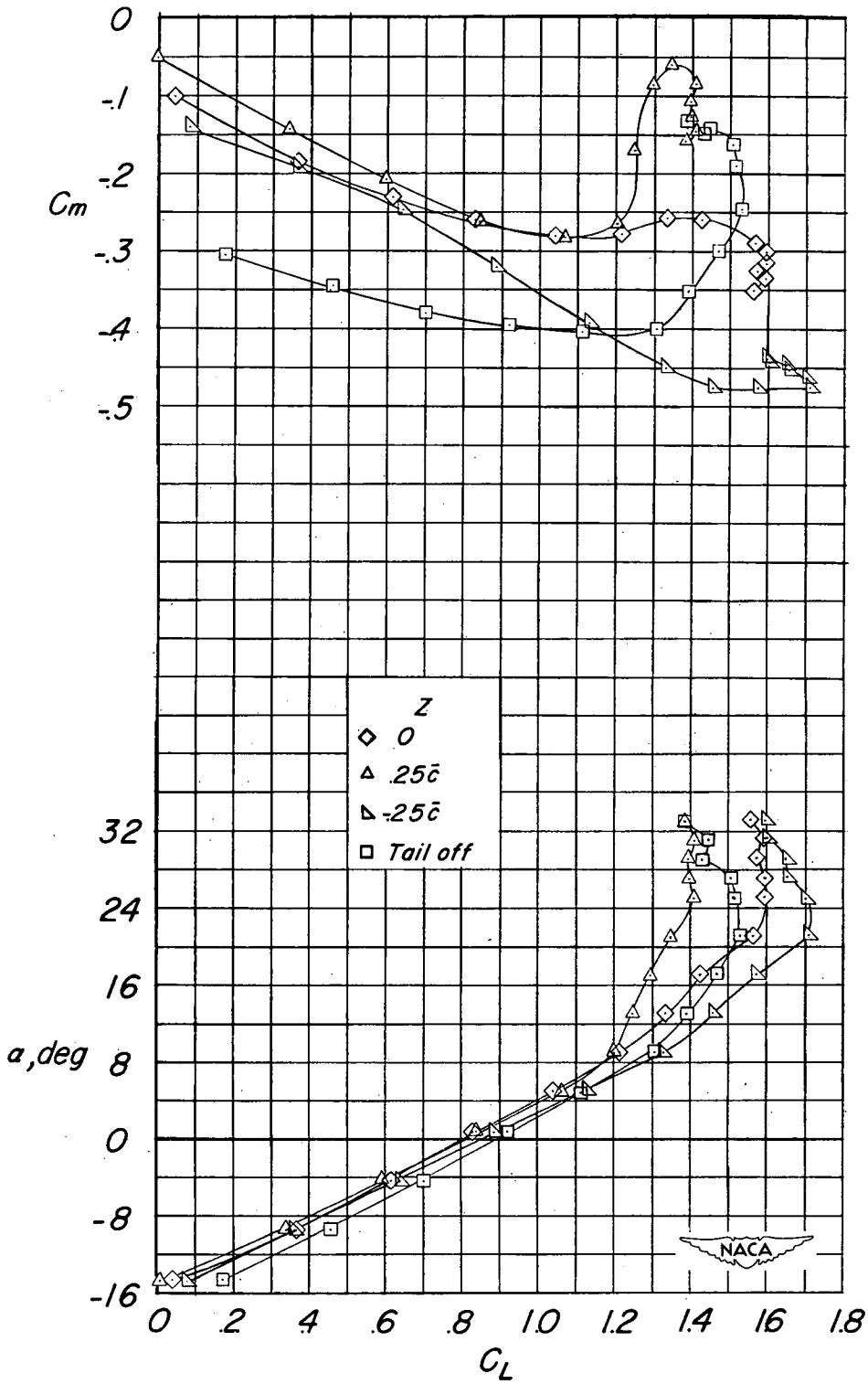

(b) $l = 1.5\bar{c}$.

Figure 4.- Continued.

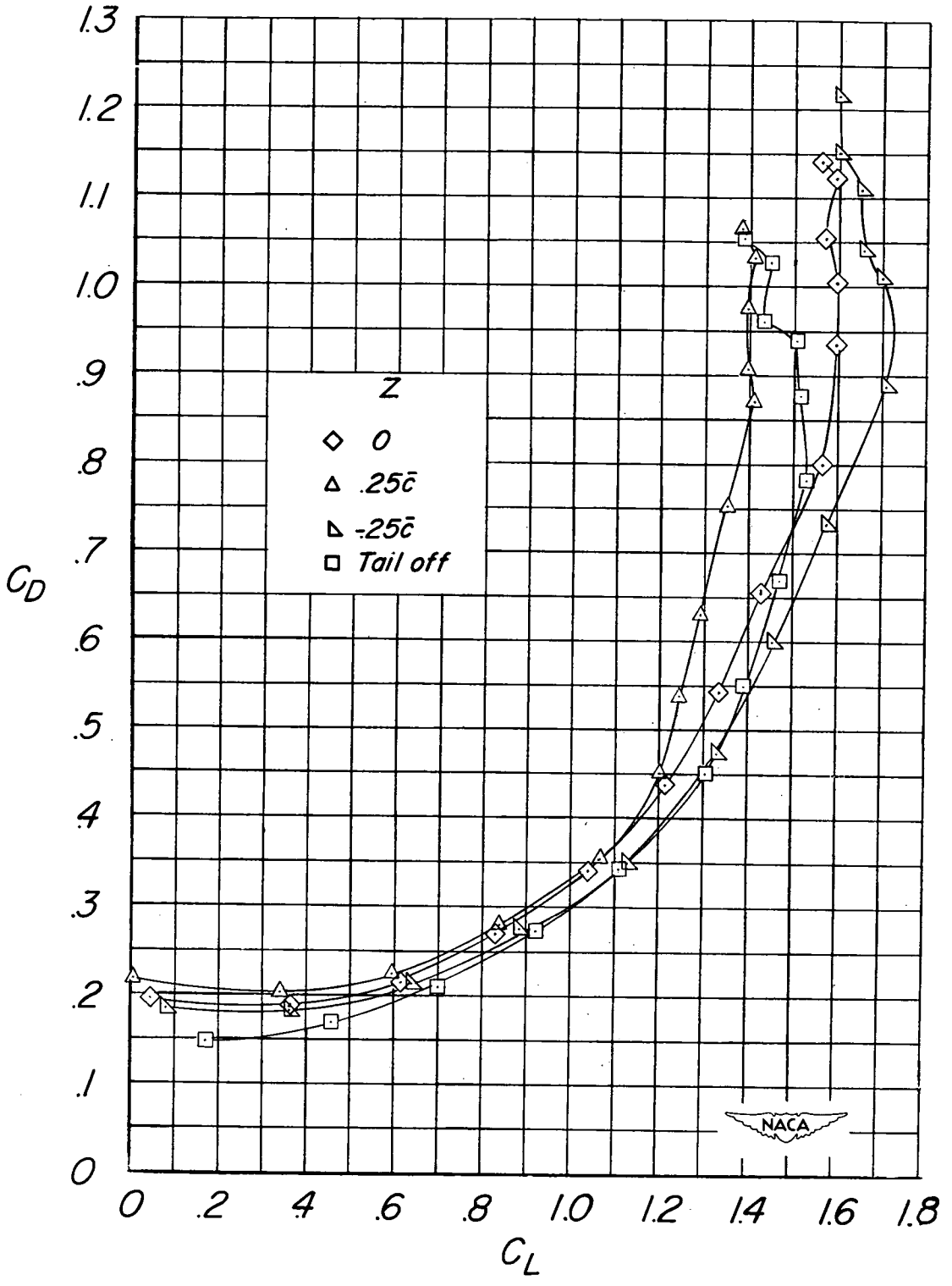

(b) Concluded.

Figure 4.- Continued.

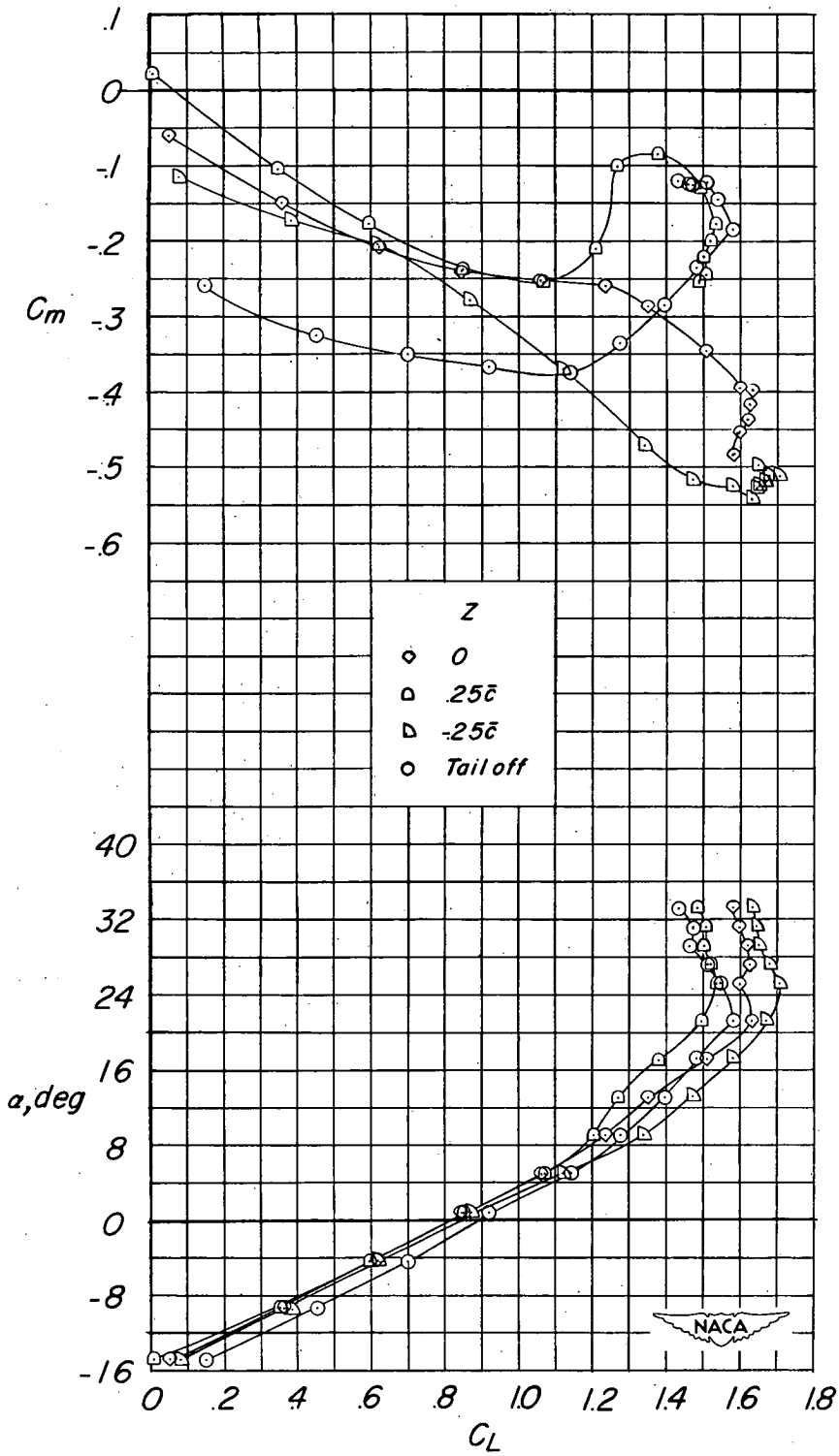

(c) $l = 2.0\bar{c}$.

Figure 4.- Continued.

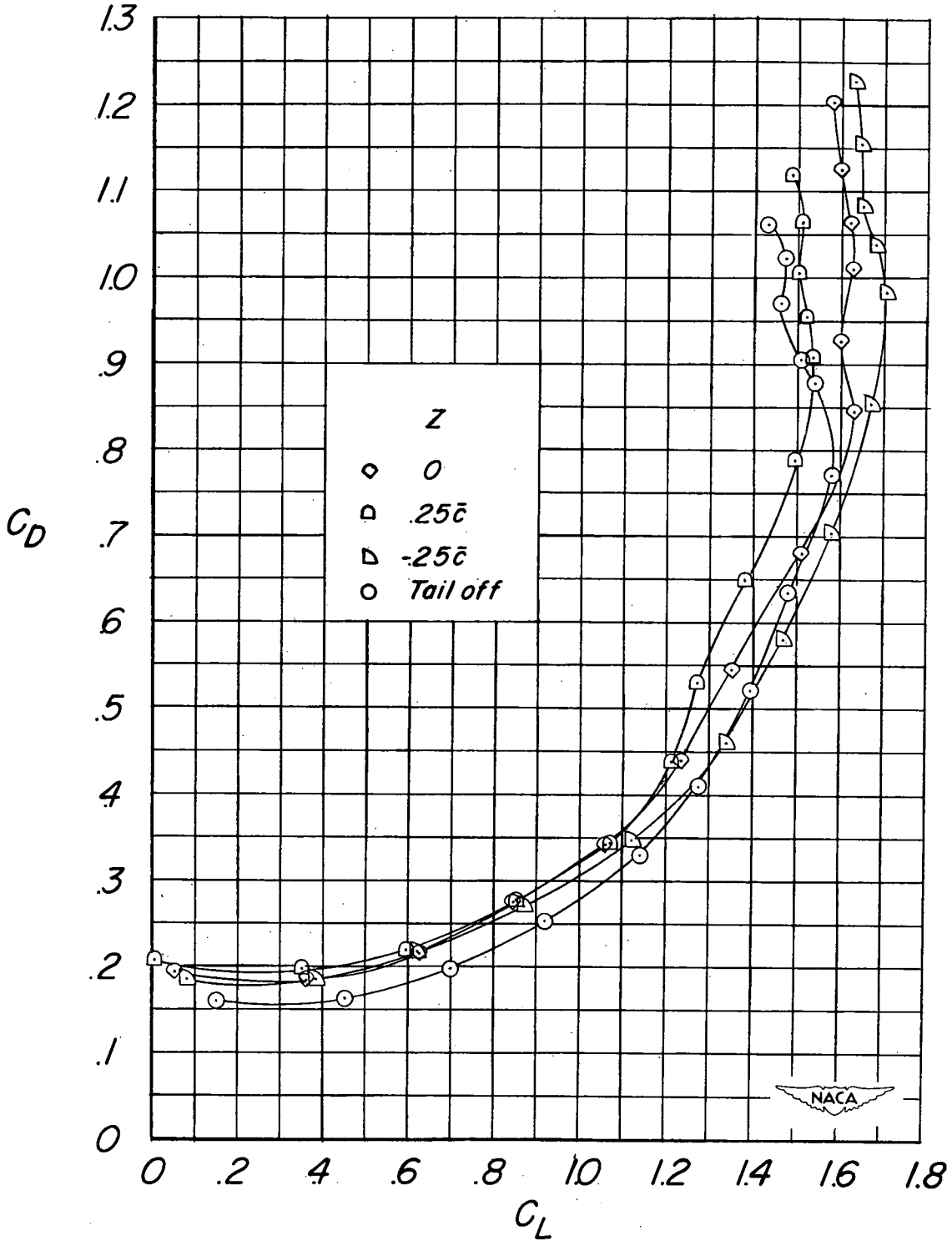

(c) Concluded.

Figure 4.- Concluded.

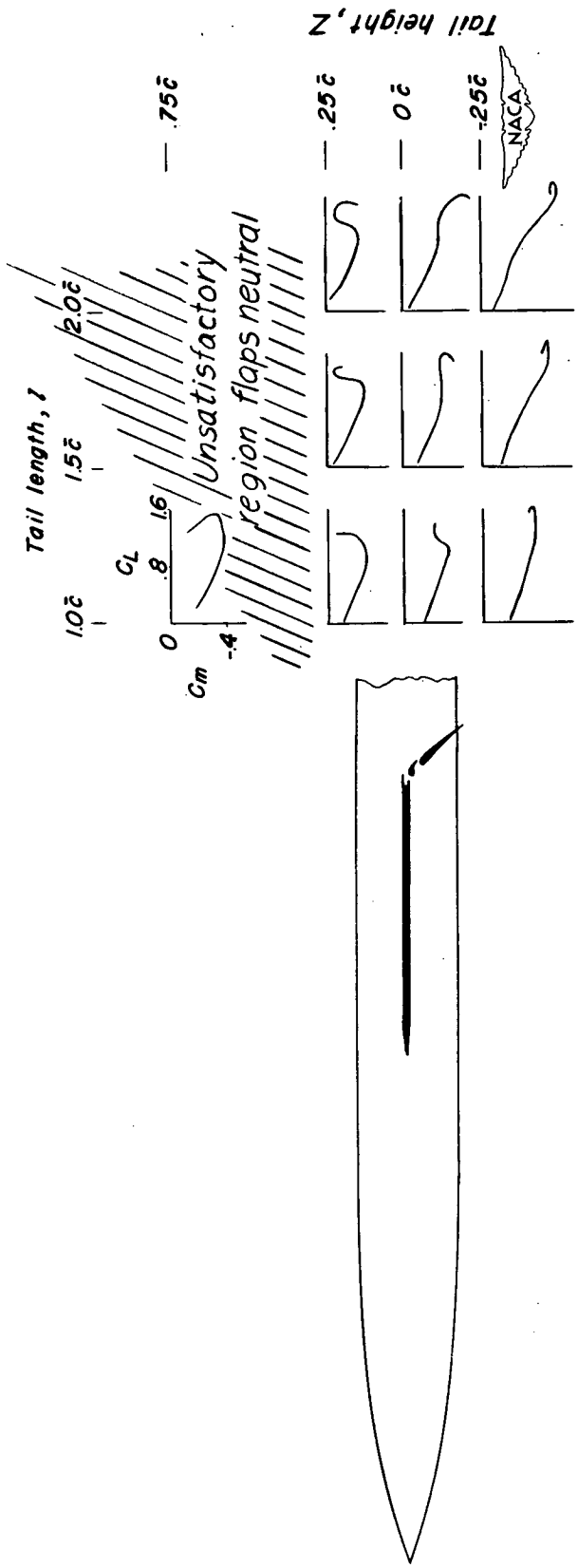

Figure 5.- Summary of the effect of location of the delta tail on the curve of C_m as a function of C_L of the model with double slotted flap deflected 52°.

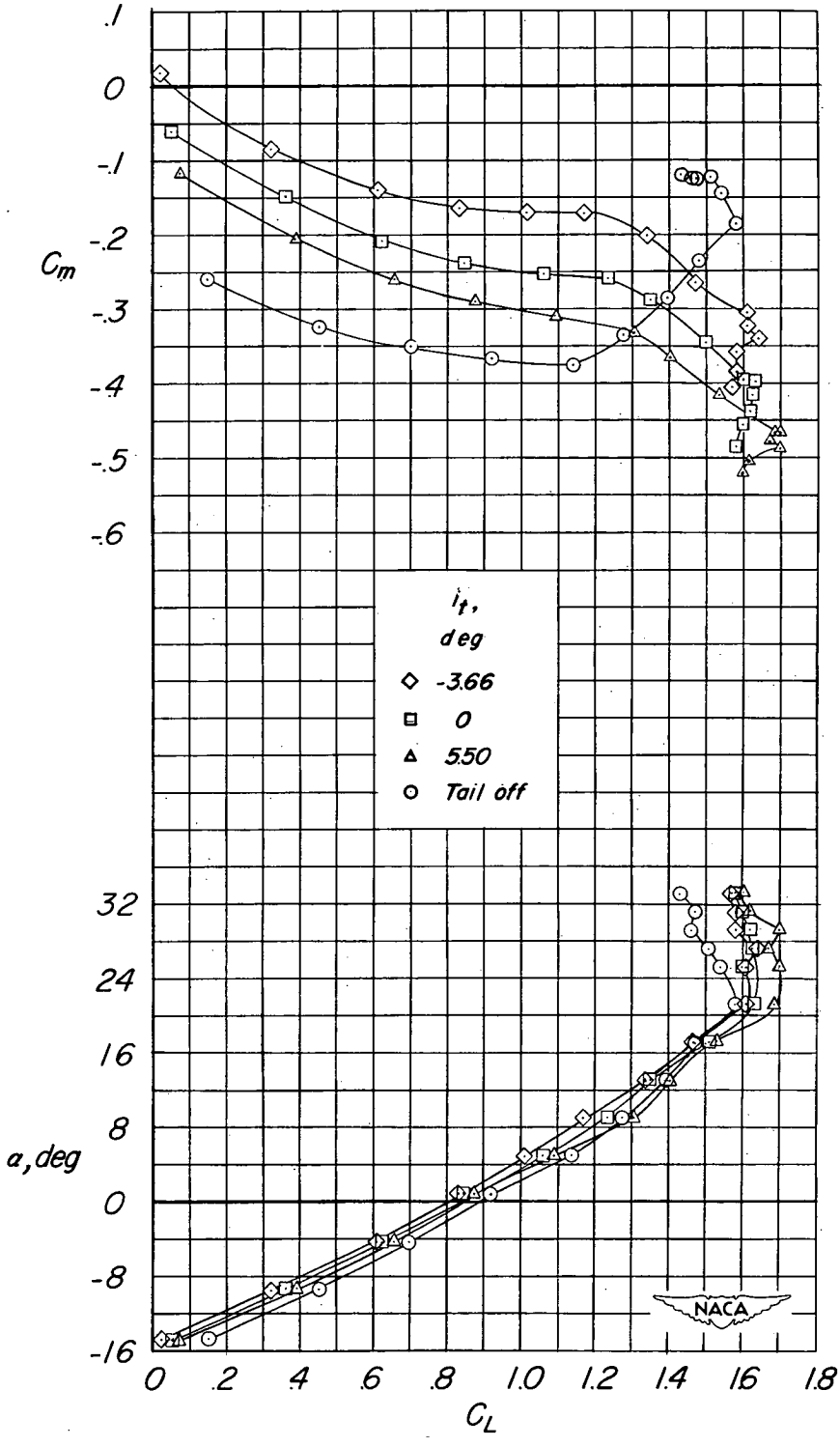

Figure 6.- Effect of incidence of the delta horizontal tail on the longitudinal aerodynamic characteristics in pitch of the model with double slotted flaps deflected 52°; $l = 2.0\bar{c}$; and $z = 0$.

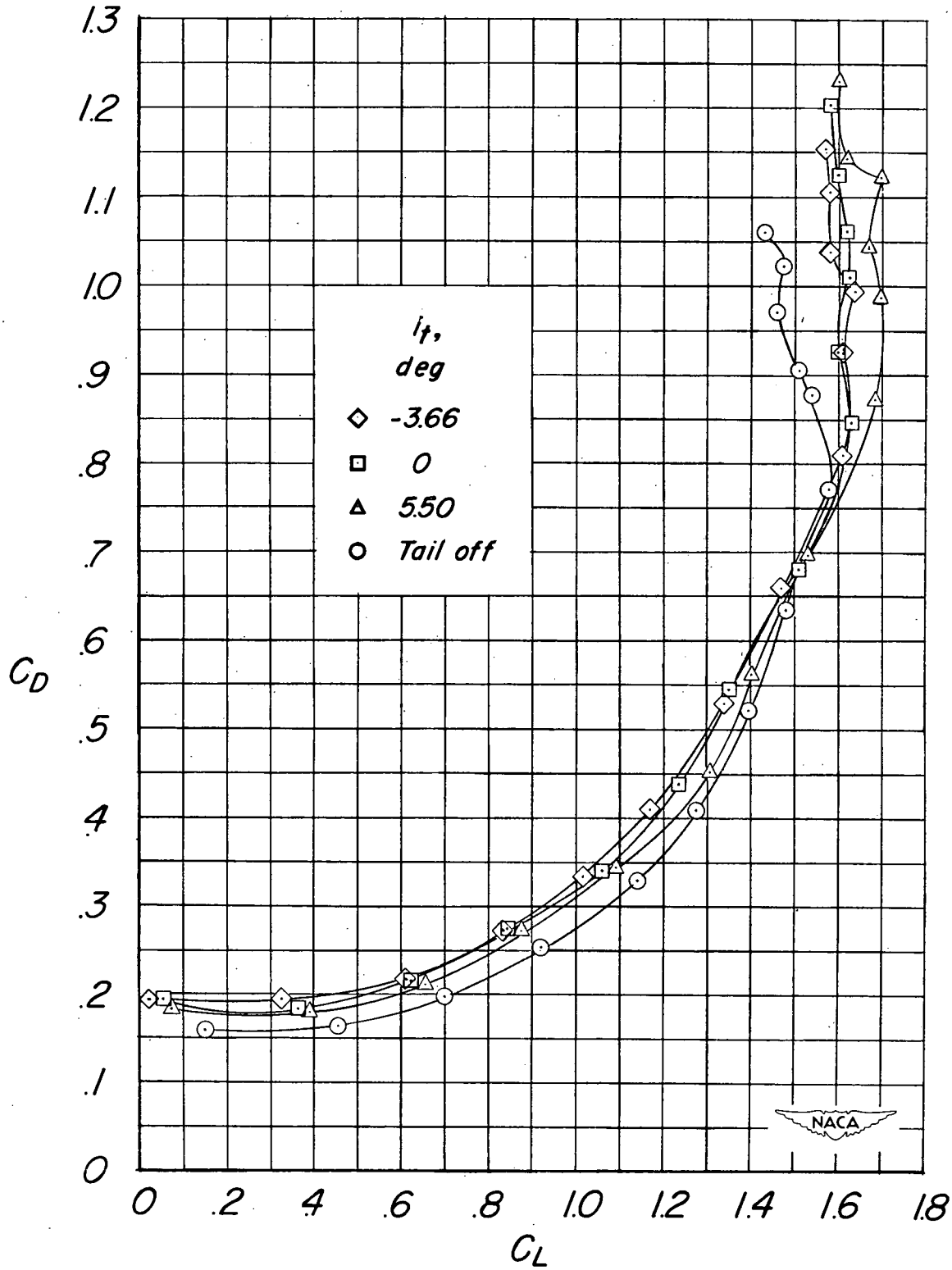

Figure 6.- Concluded.

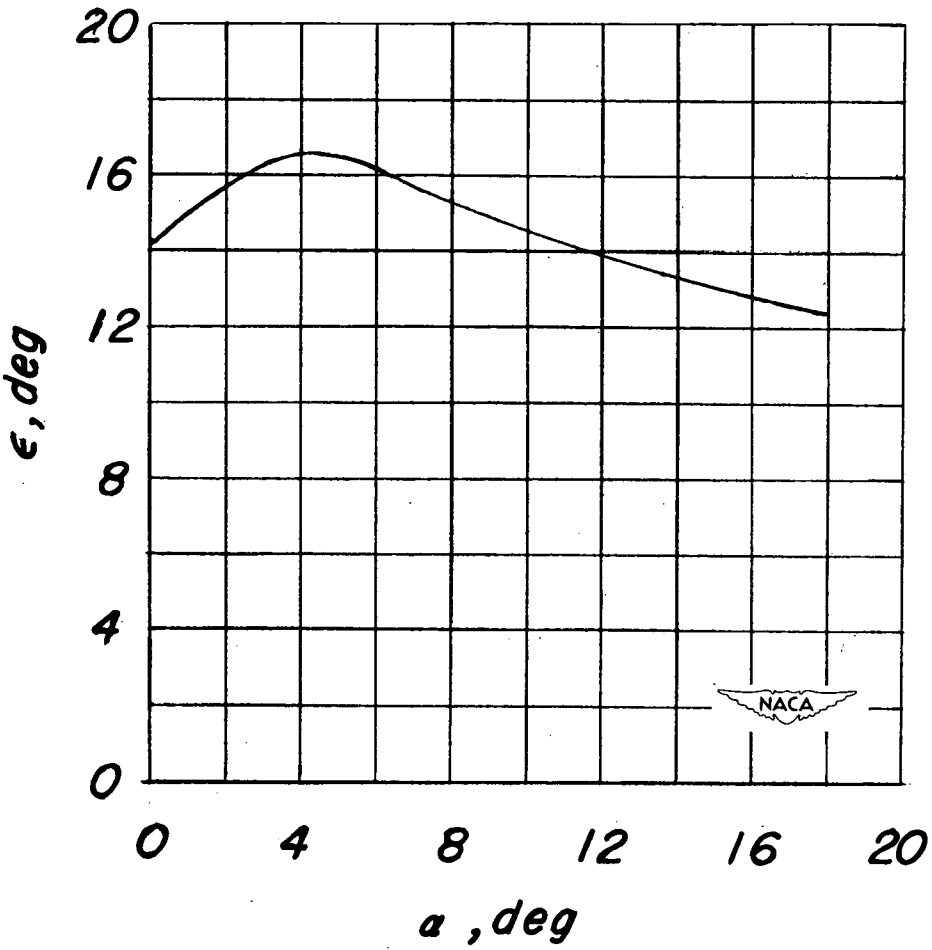

Figure 7.- Variation of the effective downwash angle with angle of attack for the delta tail at $l = 2.0\bar{c}$ and $z = 0$ on a thin delta wing with double slotted flaps deflected 52°.

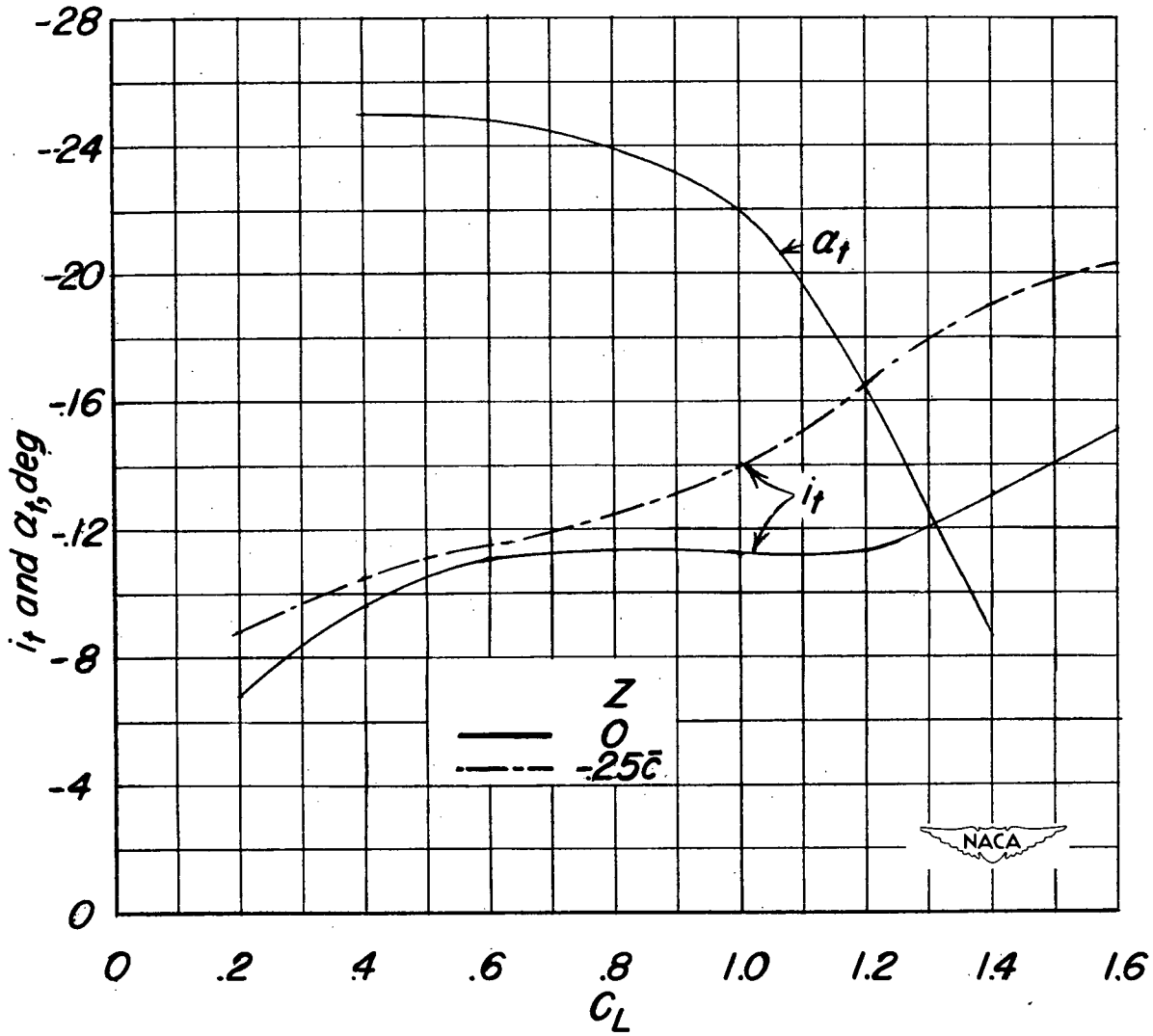

Figure 8.- Estimated tail incidence required for trim and angle of attack of tail at $l = 2.0\bar{c}$.

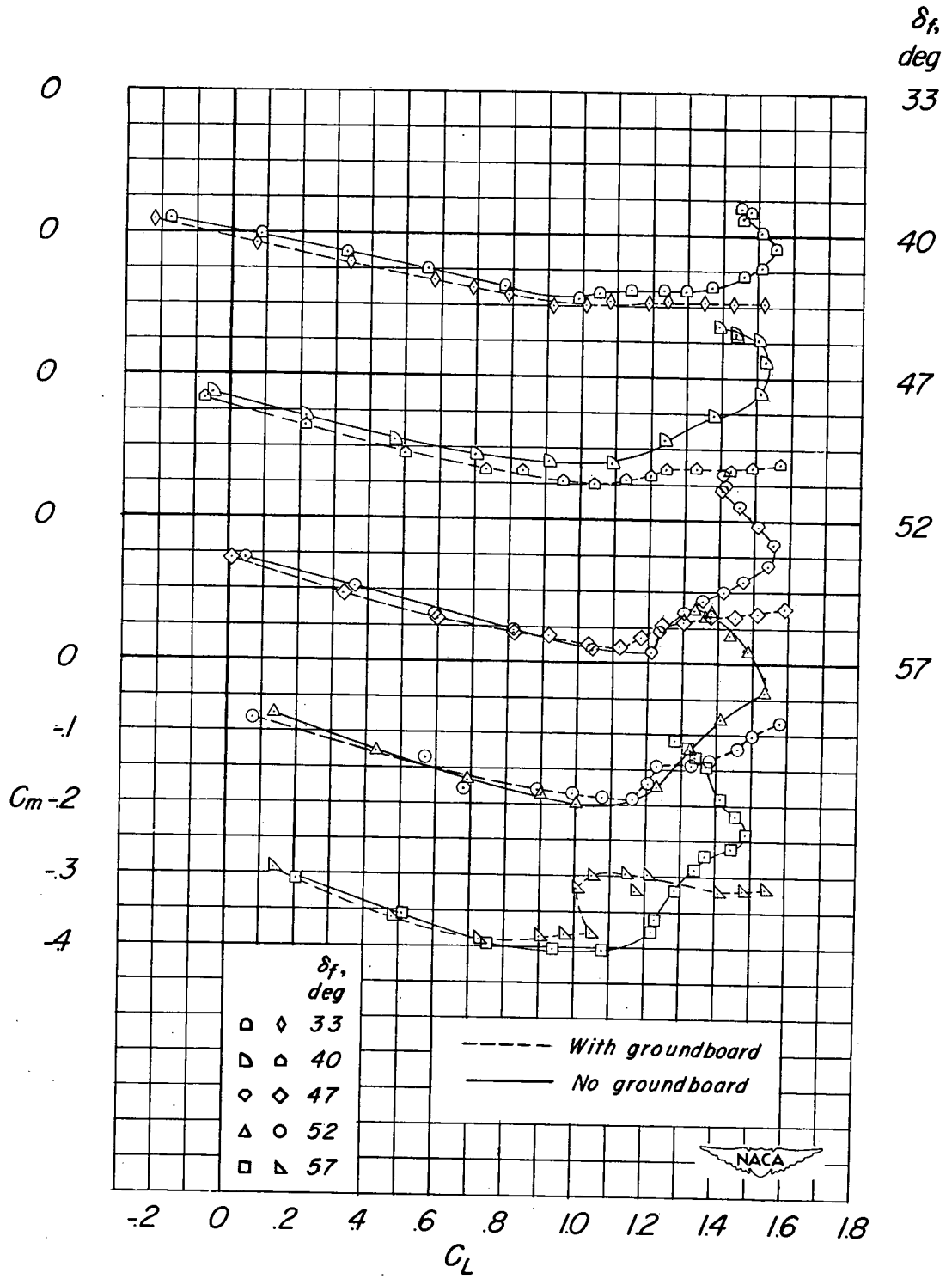

Figure 9.- Effect of ground board on the aerodynamic characteristics in pitch of the model with double slotted flaps deflected, tail off ($0.25\bar{c}$ of model, $0.61\bar{c}$ above ground board).

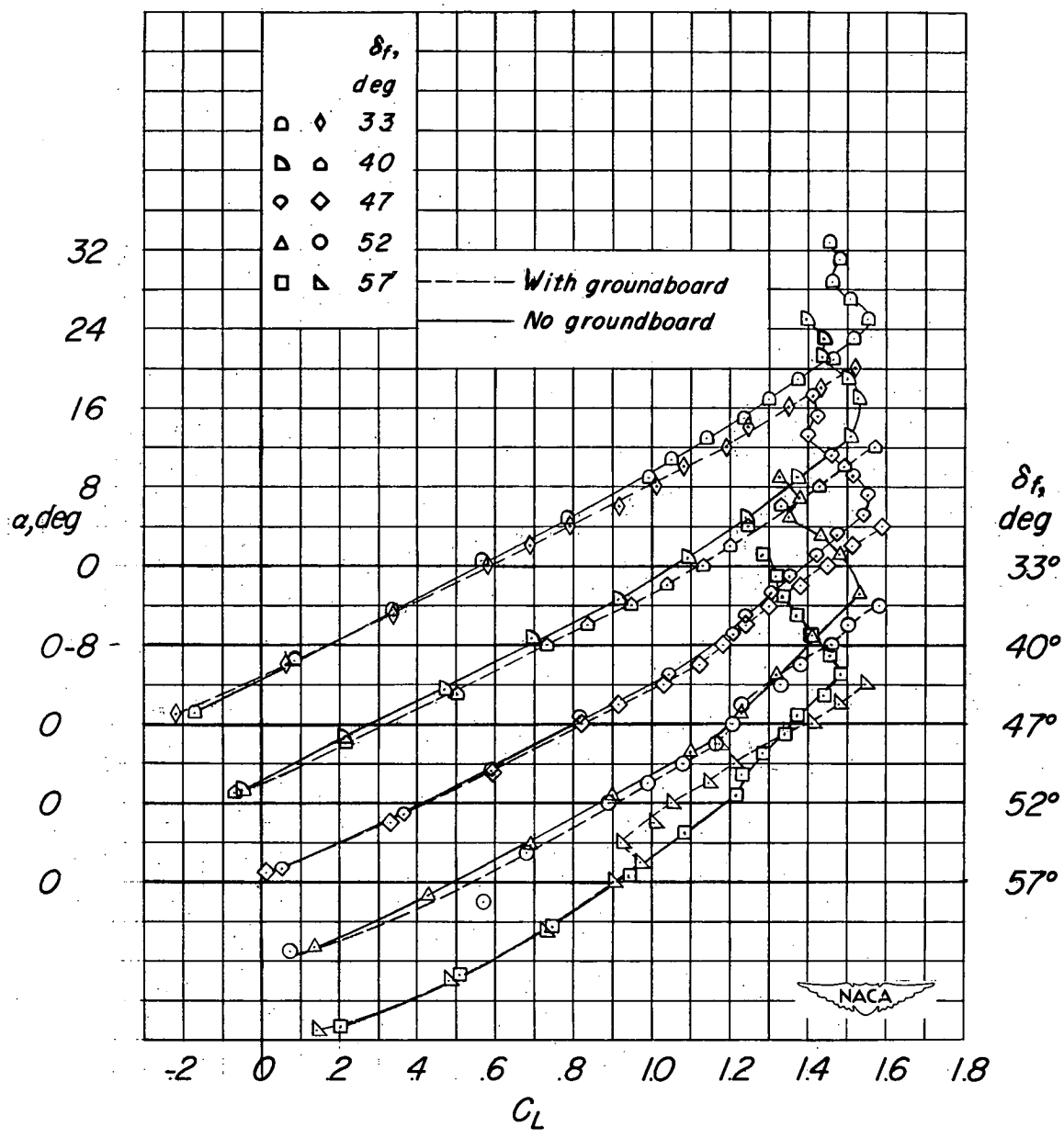

Figure 9.- Continued.

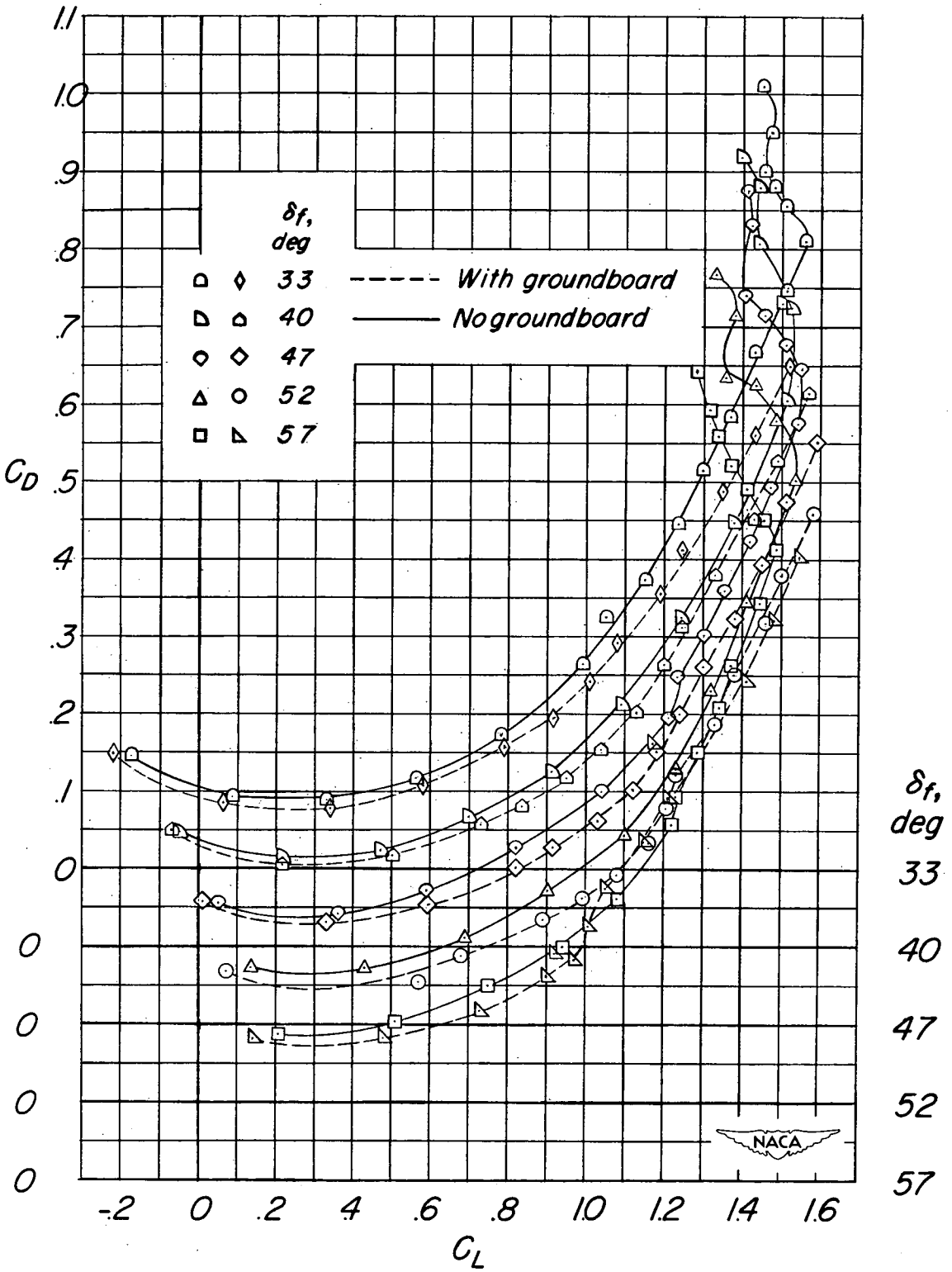

Figure 9.- Concluded.

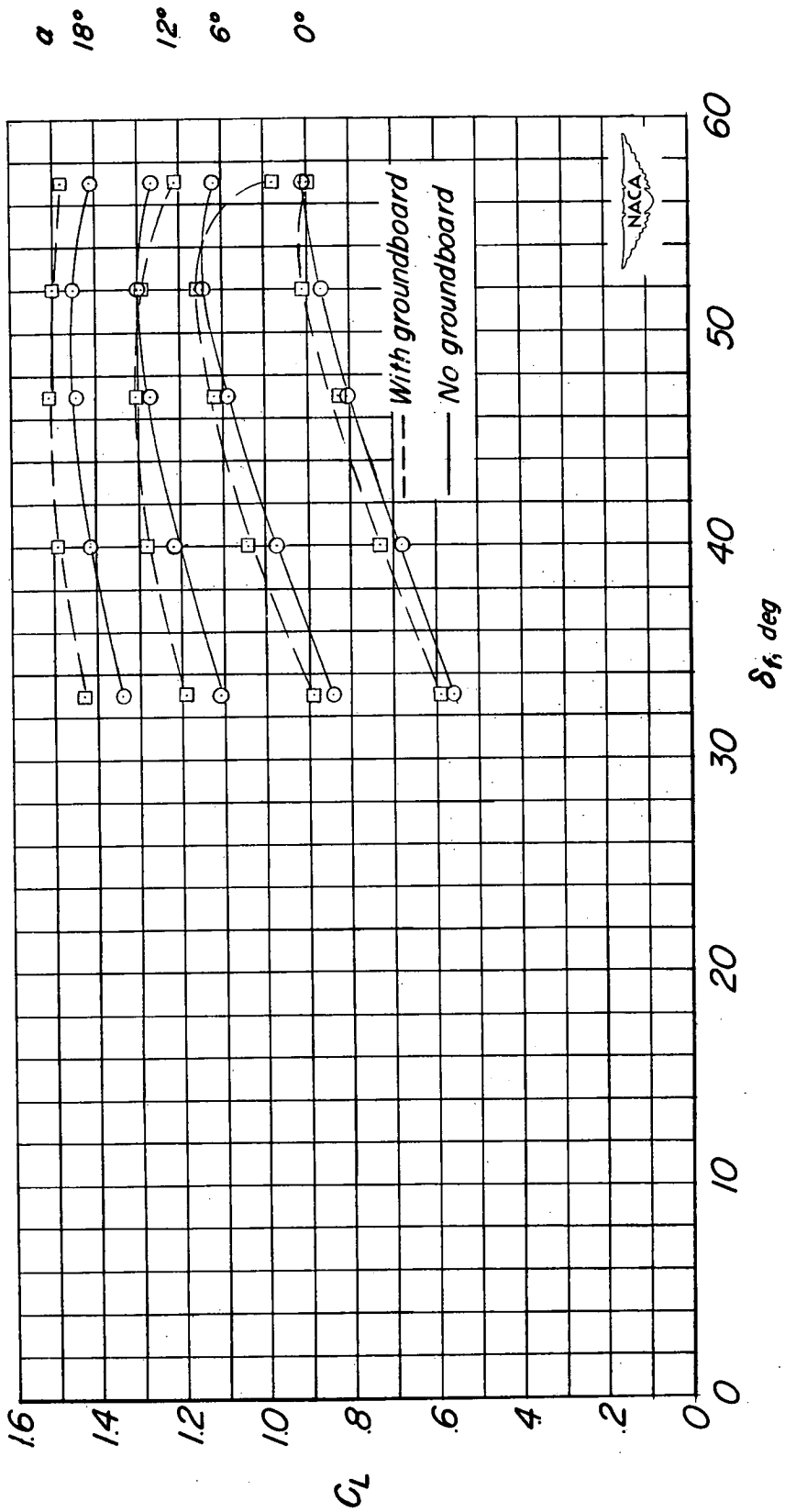

Figure 10.- Effect of ground board on the variation of C_L with double slotted flap deflection at angles of attack of 0°, 6°, 12°, and 18°; tail off, fuselage with 1.0$\bar{c}$ afterbody (0.25$\bar{c}$ of model, 0.61$\bar{c}$ above ground board).

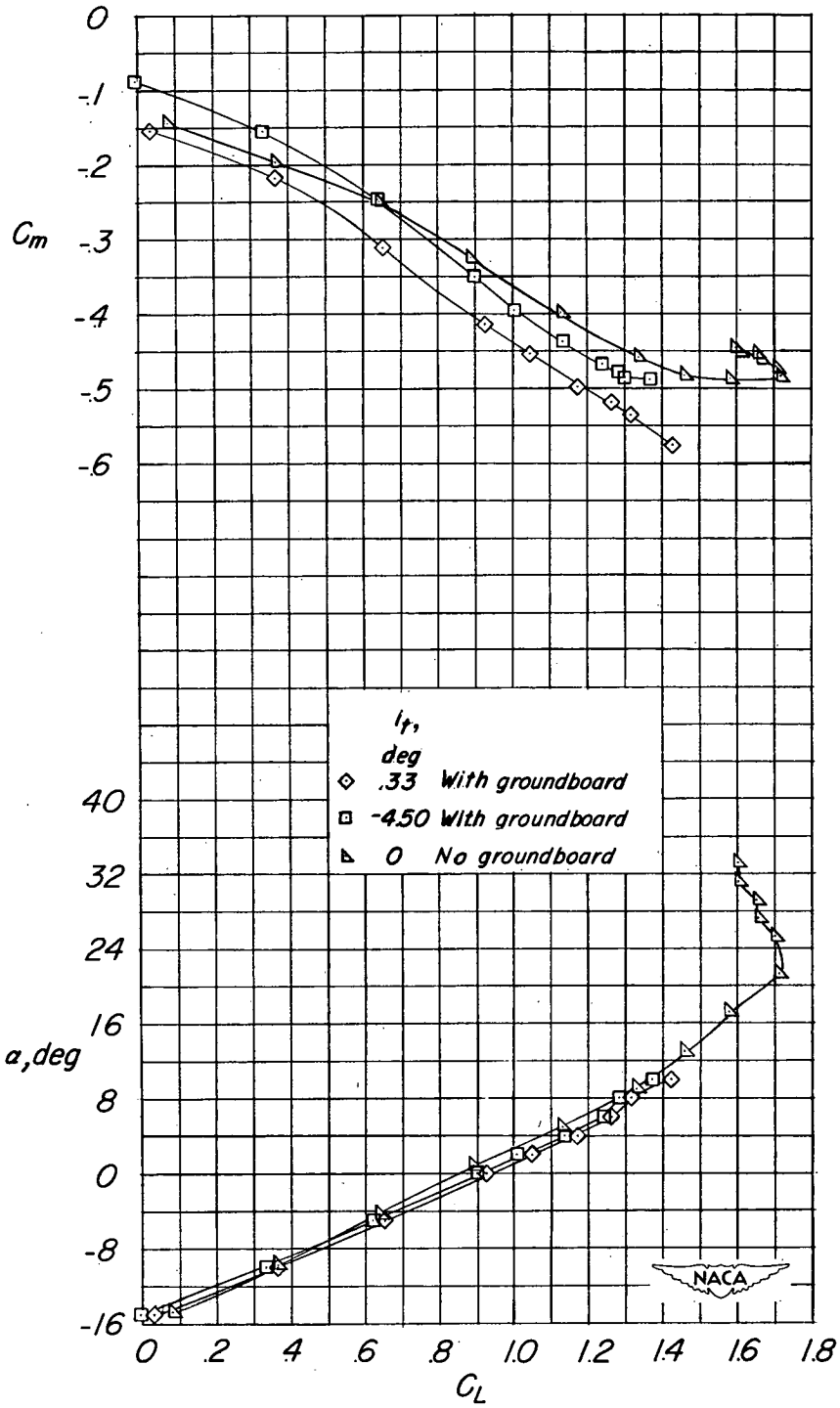

(a) $l = 1.5\bar{c}$; $z = -0.25\bar{c}$.

Figure 11.- The effect of ground board on the longitudinal aerodynamic characteristics in pitch of the delta-wing—fuselage model with double slotted flaps deflected 52°, tail on.

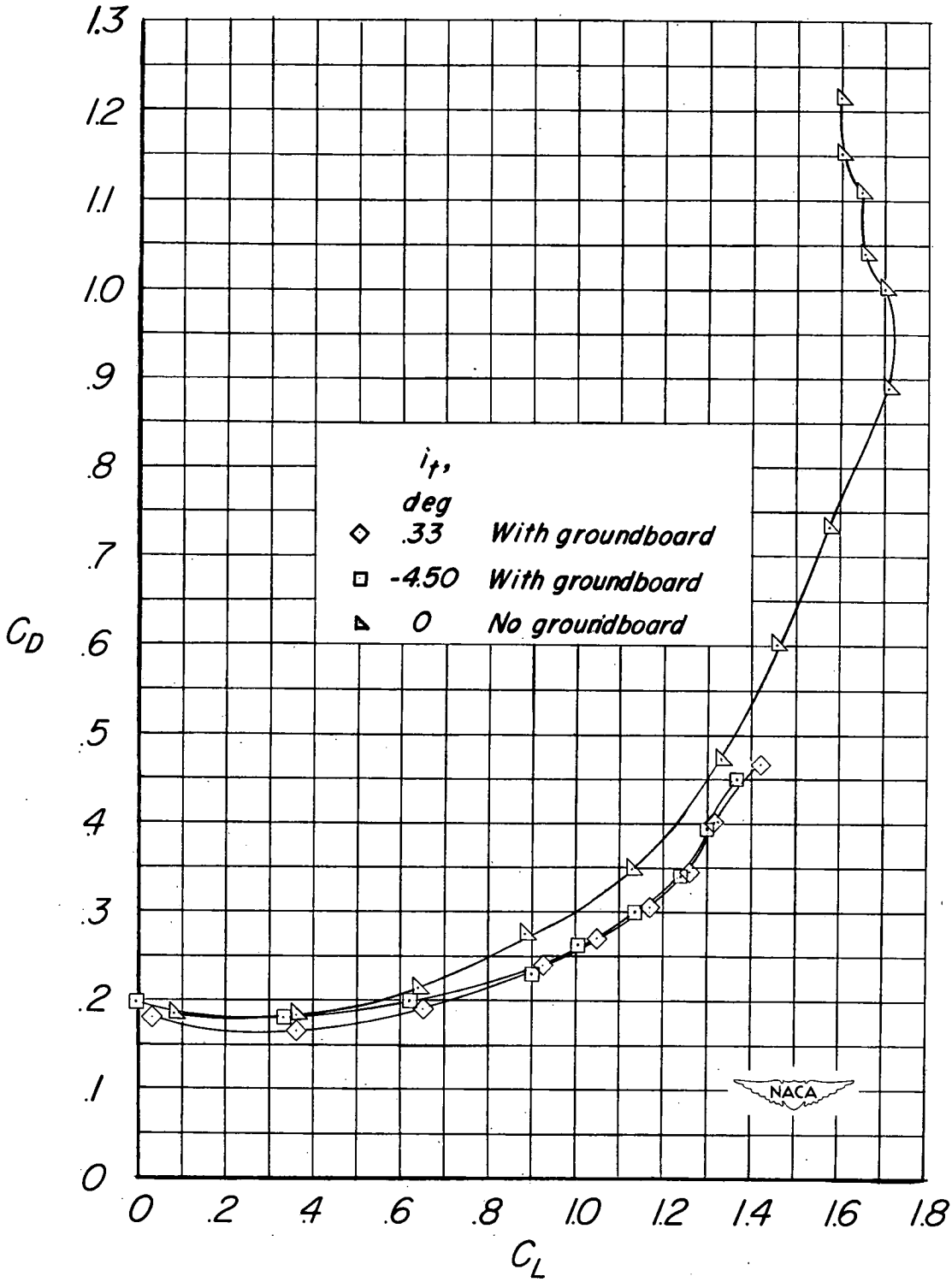

(a) Concluded.

Figure 11.- Continued.

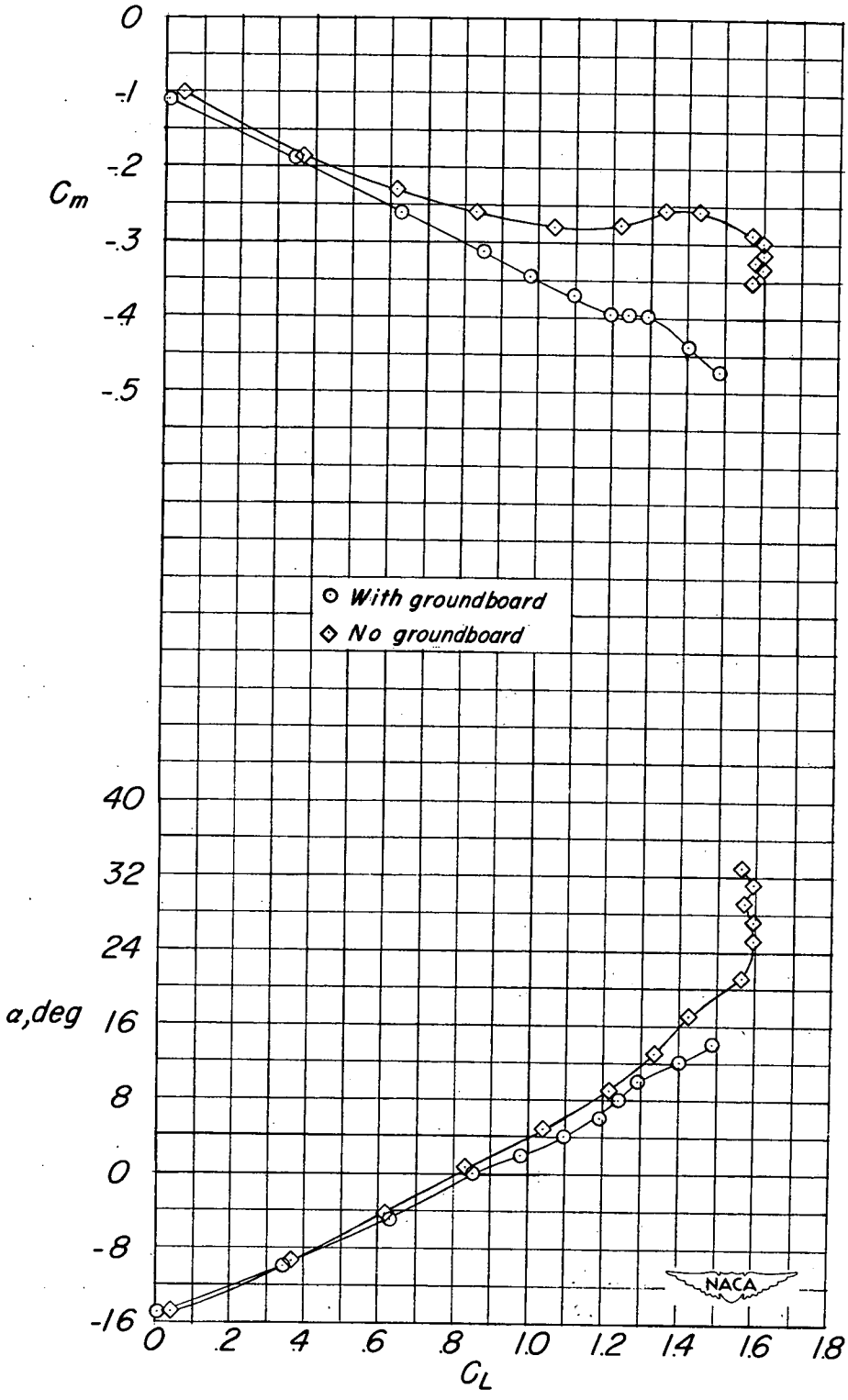

(b) $l = 1.5\bar{c}$; $z = 0$; $i_t = -0.7^{\circ}$.

Figure 11.- Continued.

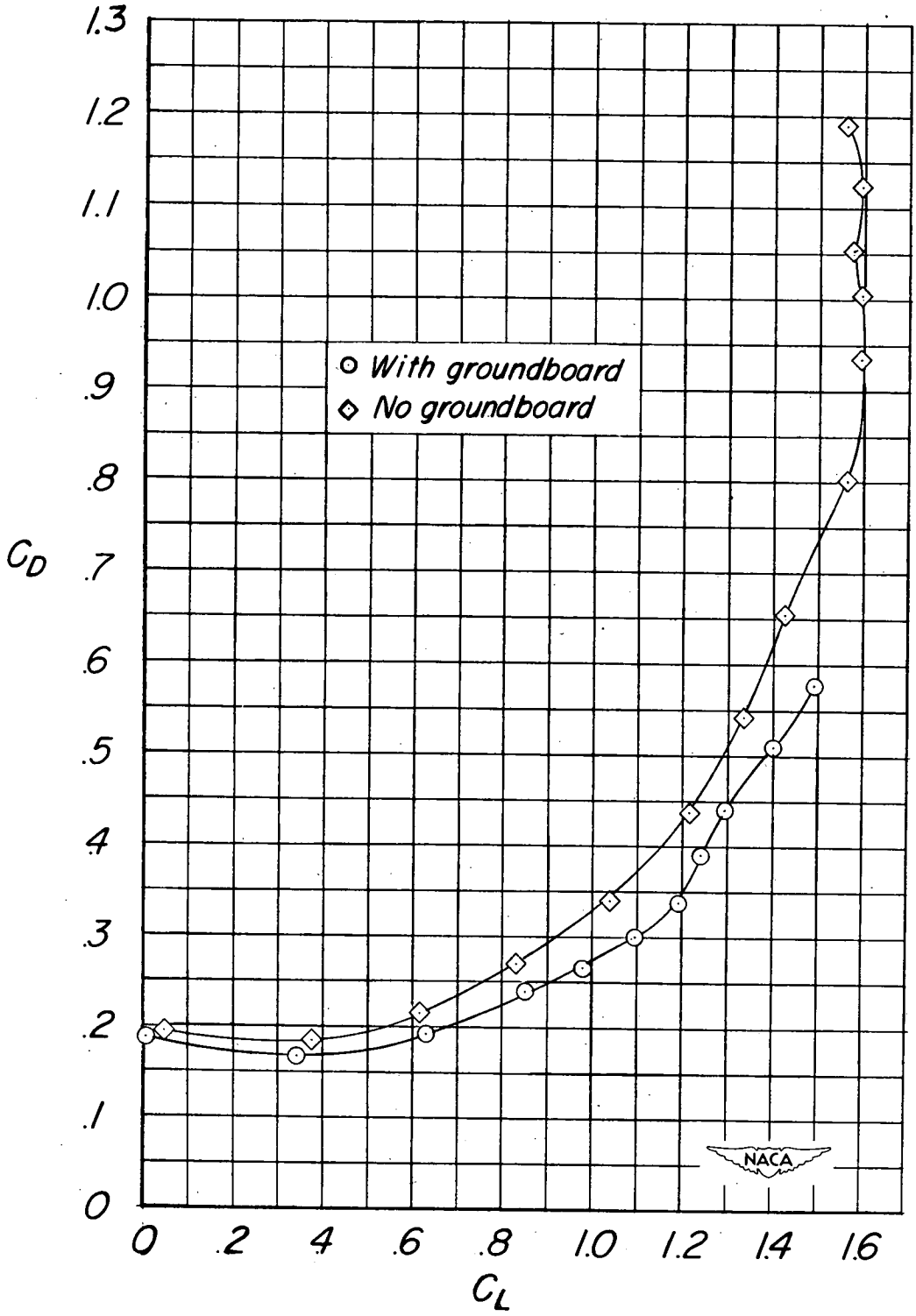

(b) Concluded.

Figure 11.- Concluded.