RELEASE DATE
FEB 1 1954

[redacted]

Copy 1
RM E53K13

NACA RM E53K13

GROUP 4 DOWNGRADE TO:
SECRET ON:
CONFIDENTIAL ON:
DECLASSIFY ON:

NACA

RESEARCH MEMORANDUM

DESIGN OF COMBUSTOR FOR LONG-RANGE RAM-JET ENGINE AND PERFORMANCE OF RECTANGULAR ANALOG

By Warren D. Rayle and Richard G. Koch

Lewis Flight Propulsion Laboratory
Cleveland, Ohio

CLASSIFICATION CHANGE
To Unclassified
By authority of CCN #2761, H.G. Maines
Changed by M. Ruda Date 12-10-70

CLASSIFIED DOCUMENT
This material contains information affecting the National Defense of the United States within the meaning of the espionage laws, Title 18, U.S.C., Secs. 793 and 794, the transmission or revelation of which in any manner to an unauthorized person is prohibited by law.

NATIONAL ADVISORY COMMITTEE FOR AERONAUTICS
WASHINGTON
January 29, 1954

(4)

[redacted]

FILE COPY
To be returned to the files of the National Advisory Committee for Aeronautics Washington, D. C.

NATIONAL ADVISORY COMMITTEE FOR AERONAUTICS

RESEARCH MEMORANDUM

DESIGN OF COMBUSTOR FOR LONG-RANGE RAM-JET ENGINE AND PERFORMANCE OF RECTANGULAR ANALOG

By Warren D. Rayle and Richard G. Koch

SUMMARY

This report describes the design of a piloted combustor intended for a ram-jet engine of long flight range. The unit comprises a large annular basket of V-type cross section, the inner surface of which is slotted and bent into small V-gutters. At the trailing edge of the basket, eight V-gutters are used to propagate the flame into the main stream.

A rectangular analog of this combustor was tested at air-flow conditions corresponding to those that might be obtained during cruise. At these conditions, combustion efficiencies of as much as 90 percent were calculated for the combustor at the design equivalence ratio of 0.52. The performance of the unit was relatively insensitive to mounting and flow variables; the greatest effect on efficiency was that of the manner and location of the fuel injection.

A full-scale version of this combustor has been designed for a 48-inch-diameter engine.

INTRODUCTION

The following material describes the design and testing of a ram-jet combustor intended to operate at a specific set of flow conditions corresponding to those that might be obtained in a long-range ram-jet engine. The work was performed at the NACA Lewis laboratory as part of a continuing program of combustor design and evaluation.

The design and testing were based on an engine of 48-inch diameter and 75-inch length, with the shape shown in figure 1(a). The altitude and flight Mach number were assumed to be those required to supply the following combustor-inlet conditions: (1) a total pressure of 10 inches of mercury absolute, (2) a temperature of 530° F, and (3) a Mach number of 0.15. The goal of the program was to attain maximum efficiency at

these conditions for an equivalence ratio of 0.52 without introducing an internal total-pressure loss of more than 3 velocity heads. Obviously, if the combustor is to operate under realistic conditions, the performance must remain high for small deviations from the design conditions.

Combustor development and testing in an engine as large as 48 inches in diameter would obviously be cumbersome and inefficient. A 10- by 24-inch rectangular analog was therefore fabricated. This test combustor was designed to correspond in length to the full-size engine and to induce similar air velocities at all stations.

The simulation extended from the throat of the inlet diffuser to the exhaust choke, thus isolating the unit acoustically. The side view of the analog is presented in figure 1(b). A rectangular cross section exists at all stations, with the height of the rectangle equal to the radius of the engine.

A kerosene-type fuel was used throughout. The properties of this fuel, MIL-F-5616 grade JP-1, are given in table I.

Any flame-holding device functions by providing a continuous source of ignition for gases flowing at velocities greater than the normal laminar flame speed (about 1 to 2 ft/sec). The baffle-type flame holder accomplishes this by a trailing vortex which recirculates the hot combustion gases. A can-type combustor serves much the same purpose, although a separate fuel source is often provided and the vortex region is more sheltered from the velocity fluctuations occurring in the main stream. When a can-type combustor is used to provide ignition sources for a system of baffle-type flame holders, the can is frequently referred to as a "pilot."

In the past, can-type flame holders have been used in engines in which stable performance and high efficiency were desired at low pressures and in which a high drag was permissible (ref. 1). Baffle-type flame holders have been used when the drag must be kept low and when the added stability of the can was not needed (ref. 2). For the conditions of these tests, neither type alone seemed adequate; therefore, a combination was explored. A protected region, or pilot, with its own fuel supply was contrived to provide a continuous source of ignition for a V-gutter flame holder, which, in turn, spread the flame throughout the main stream. The joining of the main stream to the pilot flame was made gradual, so that the continuity of the flame might not be easily broken. Since the desired fuel-air ratio was only about half of stoichiometric, an annular pilot was designed to serve also as a flow divider. This design permitted the main combustion to occur in stoichiometric mixtures in the central portion of the duct, as in the combustor of reference 3. Figure 2 shows this combustor mounted in the rectangular duct and figure 3 shows the corresponding full-scale unit.

Inasmuch as the combustion-chamber length was only 75 inches, the pilot burner was mounted in the subsonic diffuser so that full advantage might be taken of the available reaction zone. This method of mounting should assist the performance of the diffuser by reducing the tendency toward flow separation and therefore should not too greatly increase the drag.

The performance of this unit was evaluated at design conditions. Data were also taken to ascertain the effect of the individual variables - pressure, temperature, flow velocity, mounting angle, pilot fuel flow, location of main fuel injection, and vitiation of the inlet air.

APPARATUS

Test Facility

An outline of the combustor and the associated ducting used in these tests is presented in figure 1(b). Air at 40 pounds per square inch gage was supplied by the laboratory facilities; the flow rate was controlled by remotely operated butterfly valves. The electric preheaters were not capable of heating the mass of air (5 lb/sec at simulated cruise conditions) to the desired temperature and were supplemented by a single J35 turbojet combustor through which part of the air was passed, burning and subsequently mixing with the main stream. In order to increase the efficiency of the preheater, the pressure therein was maintained at an elevated value by means of a fixed-area orifice downstream. After passing through a plenum chamber, the air was introduced into the engine analog by means of a two-dimensional duct which increased in cross section from 5 by 12 inches at the inlet to a maximum of 10 by 24 inches.

A 6-inch-square window in the plenum chamber afforded a view of the combustion process.

Pilot Combustor

The pilot fuel was introduced within the basket; the main fuel was sprayed into the region below. An oxygen-hydrogen flame was used as an igniter, and the ensuing combustion occurred within and downstream of the pilot. The main combustion region was located in the 10- by 24-inch duct fabricated from 1/2-inch steel plate. No forced cooling was employed. The exhaust choke was constructed from a series of 3/4-inch tubes through which quench water was sprayed to halt the reaction. A grid of tapered Inconel members moved into the spaces between the quench tubes, thus providing a variable-area exhaust nozzle. This nozzle did not correspond to that of the engine but was necessary in order to permit the testing to be conducted at constant inlet pressure, temperature, and

Mach number while the fuel-air ratio was varied. The mixture of combustion products, air, and water vapor then passed through an array of thermocouples and into the exhaust mains.

The first pilot configuration tested is shown in figure 2. In cross section its shape was that of an asymmetric V. The outer surface was perforated by four rows of 1/2-inch holes spaced 2 inches apart. Downstream of these holes the metal sheet was continued in order to act as a flow divider and to further protect the pilot zone. The total length of the upper surface was 24 inches. The lower surface of the basket was cut longitudinally, the cuts being spread at the downstream edge by folding the metal into a V-shape. The resulting openings permitted a gradual mixing of the main-stream gases with the pilot flame and also provided additional air entry for pilot combustion. From the center of the lower trailing edge of the pilot basket was appended a V-gutter, a flame seat for the main combustion. This basic configuration was used with slight modifications throughout the series of tests.

Instrumentation

The mass flow of air was calculated from the pressure drop across a variable-area orifice. Fuel flow was determined from rotameter readings, the preheater fuel supply being measured independently from that of the experimental combustor. Two arrangements were used for controlling the pilot fuel flow. In the earlier tests, the pilot- and main-fuel systems were manifolded so that the flows remained roughly proportionate. Later, a separate control was used for the pilot-fuel system. In this case, the sum of the two flows was measured, and the pilot flow was estimated from the injection pressure. The quench-water flow was also determined from rotameter readings. All rotameters were calibrated after installation. The quench spray, an air-atomizing type, required a small flow of high-pressure air; this flow was measured by use of a small fixed orifice.

Pressures at various points along the system were transmitted to mercury manometers whose readings were photographically recorded. Total and static pressures were obtained near the throat of the diffuser (station 1) and just upstream of the combustor (station 2). The combustor-inlet pressure was considered to be the total pressure at station 2. Static pressures were also measured at the top and the side of the burner section and at three points on the side of the duct just ahead of the exhaust choke. Pressure taps downstream permitted measurement of the pressure drop across the choke.

Temperatures were measured by means of thermocouples strategically located along the system. Chromel-alumel thermocouples, connected to a recording instrument, were located as follows: (1) a single thermocouple

at station 0, (2) five thermocouples spot-welded to the combustor wall, and (3) 16 thermocouples arrayed at centers of equal areas in the duct at station 4. Iron-constantan thermocouples were employed to measure the temperatures of the air entering the preheater and of the quench water.

PROCEDURE

Operation

The running procedure finally evolved was as follows: First, the required mass flow of air was established. Then, the preheater was started and its fuel flow adjusted until the plenum-chamber temperature reached equilibrium at about 530° F. The pilot fuel was admitted and was ignited by an oxygen-hydrogen torch, followed by the main fuel flow and combustion. The combustor pressure was set to the required value of 10 inches of mercury absolute, and the quench spray was adjusted to give a mean exhaust temperature between 400° and 600° F. Data were then taken. The wall temperatures were recorded twice over a measured time interval (about 30 sec) in order to establish the rate of heat absorption of the walls. Another fuel flow was set and the process repeated. In general, a limit of four or five consecutive data points was enforced by overheating of the combustor wall. When the maximum wall temperature reached 1000° to 1100° F, the fuel flow was stopped and the combustor was permitted to cool.

Most of the data were taken at the simulated cruise condition and translated into curves of efficiency against equivalence ratio. Data on combustion limits were also sought at the standard flow conditions. In general, the fuel system would not provide sufficient fuel to attain rich blow-out, the limitation being in the capacity of the main fuel nozzles. Lean limits were virtually nonexistent since the pilot basket retained flame even in the absence of the main fuel. The lean limit of the pilot itself was likewise indefinite; frequently, flame remained visible in the basket for as long as 10 to 20 seconds after the supply valve was closed.

Calculation Methods

The thermal efficiency of the combustion process was deduced from a heat balance. The total heat content of the exhaust gases - air, superheated water vapor, and combustion products - was computed. Similarly, the heat content of the ingredients was summed. The ingredients included air, preheater combustion products, water, fuel, and quench air. The heat liberated in the unit was then the difference of these values plus the empirically determined loss from the combustor wall. The

combustion efficiencies cited herein are then the ratio of heat liberated (including estimated loss) to the theoretical heating value of the fuel.

The equivalence ratios used on the plots were computed from the total air flow, fuel flow, preheater fuel flow, and preheater efficiency. Thus, they include the vitiation resulting from preheater combustion. In general, the operation of the preheater resulted in the preconsumption of about 5 percent of the available oxygen.

The heat loss of a unit such as this may be quite large. It comprises three components - convection, radiation, and capacitance. The first two components are functions of the wall temperature; the storage term is a function of the rate of change of the wall temperature. In order to determine the relative magnitude of these terms, a set of data was taken with only the preheater used. With a constant fuel flow to the preheater, the heat loss of the gases passing through the combustor was measured periodically, as was also the wall temperature. From these data, an empirical heat-loss equation was calculated. This method of estimating losses, though not precise, was deemed sufficient for the purpose. Losses computed ranged from 5 to 20 percent, being smaller percentagewise at the higher equivalence ratios. The final efficiency figures with the loss included were reproducible to within about 2 percent.

The total-pressure loss was calculated from the total pressure at the inlet, the static pressure at the exit, and the total heat liberated. This calculation involved the assumption that the temperature profile of the gas entering the exhaust choke was flat, since the temperature was computed from the mass flow of air and the heat liberated. The results indicate the magnitude of the pressure drop but are not sufficiently refined to permit comparisons of similar configurations.

RESULTS

At an inlet velocity and temperature corresponding to cruise conditions, pilot combustion persisted until the pressure was reduced to about 6.5 inches of mercury absolute. Exhaustive tests of the stability limits were omitted, since the data quoted seemed to indicate sufficient stability to justify transferring attention to the performance of the combined pilot and main combustor. Subsequently, the trailing V-gutter was added and the main fuel was injected.

Early tests of the original combustor yielded efficiency maximums at very low equivalence ratios, as shown in figure 4. In order to shift this peak to richer regions, the air flow through the pilot was increased by enlarging the second row of holes from 1/2- to 7/8-inch diameter. The

resulting data are also shown on figure 4. The efficiency of the unit at design equivalence ratio dropped from about 79 percent to about 76 percent. For both tests the main fuel was introduced through a single swirl nozzle rated at 60 gallons per hour, directed downstream, and located about $1\frac{1}{2}$ inches below and 5 inches upstream of the lower trailing edge of the pilot. The data were obtained at off-design flow conditions as a result of vibration failure of the inlet total-pressure tube. From the mass flow, temperature, and inlet static pressure, the correct values of total pressure and inlet Mach number were calculated to be as shown on figure 4.

The effect of varying the amount of fuel injected through the pilot is shown in figure 5. No significant change in efficiency resulted from increasing the pilot equivalence ratio to 0.103; the term "pilot equivalence ratio" describes the ratio of pilot fuel to the fuel theoretically necessary to burn all the air supplied to the total combustor. This insensitivity may be attributed to the constant efficiency of the pilot, which is shown on figure 6. The data are presented both before and after the heat-loss correction was included. It may be noted that in this instance a low rate of heat liberation was accompanied by a high percentage of heat loss. The data point at an equivalence ratio of 0.085 which does not fall on the curve is the first point of the series. The error at this point may be attributed to the uneven distribution of heat in the combustor wall, which resulted in the calculation of an unduly high heat loss.

Because the over-all equivalence ratio for maximum efficiency remained too low, further changes were made. In order to reduce the probability of combustion occurring in locally rich regions, the fuel-injection system was modified. Two swirl nozzles rated at 40 gallons per hour and located about 16 inches upstream of the basket's trailing edge at centers of equal areas were used to replace the single nozzle rated at 60 gallons per hour and located 5 inches upstream. This change raised the efficiency at design condition from about 76 percent to 85 percent and gave a maximum efficiency of 89 percent at an equivalence ratio of 0.42, as is shown on figure 7. Also shown is the effect of increasing the angle of attack of the pilot, that is, the angle between the center line of the pilot and the base line of the combustor. An increase from 6° to 8° did not greatly affect the performance.

The direction of the fuel injection was next varied. Figure 8 shows the drastic effect obtained merely by rotating the fuel-injection bar. The two curves of greatest interest are those representing upstream and downstream injection. Upstream injection was found to shift the peak efficiency to about the desired equivalence ratio. The curve representing cross-stream injection is of little practical interest; it indicates the decline in rich efficiency resulting from directing the fuel spray upward, toward the pilot. This result may, of course, be explained by assuming that this arrangement results in locally rich mixtures.

The effect of combustor-inlet pressure is shown in figure 9 (the fuel being injected upstream). Increasing the pressure from 10 to 12 inches of mercury raised the efficiency at the design condition from about 91 to 95 percent; lowering the pressure to 8 inches dropped the efficiency to about 73 percent and shifted the efficiency peak to a richer region. Brief tests of the final design at an inlet pressure of 17.5 inches of mercury showed no resonant instability, no overheating of the basket, and efficiency on the order of 95 percent.

The utility of the flow divider (the extension of the outer surface of the basket) was next examined. Stepwise removal of this surface indicated that an excess of metal was originally present. Figure 10 presents efficiency curves for the original basket compared with those for the same basket with 6 and 12 inches of the outer surface removed. The first modification is seen to perform as did the original. The removal of 12 inches of the metal reduced the stability of the unit so that blow-out occurred at an equivalence ratio of about 0.47.

These tests were all conducted with combustion preheat; that is, a small amount of the available oxygen had been already consumed. In order to determine whether this factor would seriously affect the results, the data represented by figure 11 were obtained. It should be noted that these data were taken with an early configuration (single nozzle for the main fuel) and not with the final design. The trends should still apply. In order to vary the amount of vitiation without changing the inlet temperature, the same conditions were obtained with and without electric preheat by changing the amount of combustion preheat. The chief effect of the vitiation seems to be to increase the slope of the curve. Surprisingly enough, at the lean condition the performance was actually better with vitiated air. This improvement was slight and may reflect data scatter. The effect at the design equivalence ratio was slight but adverse. It may be tentatively concluded that the vitiation normally present during these tests would cause the results to be, if anything, conservative.

The total-pressure drop through the duct with combustion was computed for several instances to be about 6 velocity heads. This drop seemed excessive and was checked by removing the combustor and accessories. The empty duct alone was found to have a drag of about 3 velocity heads. Therefore, it was assumed that the drag due to the combustor itself might approach 3 velocity heads; this matter may be more accurately checked with the full-scale model.

CONCLUDING REMARKS

From the results shown in the preceding section, it may be concluded that the combustor developed very nearly satisfies the original

requirements. The peak efficiency of about 90 percent was obtained at the required operating equivalence ratio of 0.52. The drag was near 3 velocity heads, and the stability permitted efficient operation considerably removed from the standard conditions. The data cannot ensure that instability or burnout, or both, will not occur at the pressures encountered at low altitude, but they do provide a basis for design and full-scale testing.

The results indicate that this particular configuration is insensitive to mounting but is strongly dependent on the manner of fuel injection. This greatly facilitates the conversion of the two-dimensional design to a full-scale annulus basket, inasmuch as the open areas, lengths, and angles cannot all be maintained identical with those in the test unit, whereas fuel injection is more readily adjusted. Such a full-scale combustor was designed.

Lewis Flight Propulsion Laboratory
National Advisory Committee for Aeronautics
Cleveland, Ohio, November 17, 1953

REFERENCES

1. Dailey, C. L., and McFarland, H. W.: Development of Ramjet Components. USCAL Rep. No. 13-5, Aero. Lab., Univ. Southern Calif., Oct. 8, 1951. (Prog. Rep. for June, July, Aug. & Sept., 1951, U.S. Navy, Bur. Aero. Contract NOas 51-116-c.)

2. Jones, W. L., Shillito, T. B., and Henzel, J. G., Jr.: Altitude-Test-Chamber Investigation of Performance of a 28-Inch Ram-Jet Engine. I - Combustion and Operational Performance of Four Combustion-Chamber Configurations. NACA RM E50F16, 1950.

3. Cervenka, A. J., Bahr, D. W., and Dangle, E. E.: Effect of Fuel-Air Ratio Concentration in Combustion Zone on Combustion Performance of a 16-Inch Ram-Jet Engine. NACA RM E53B19, 1953.

TABLE I. - ANALYSIS OF MIL-F-5616 GRADE JP-1 FUEL

A.S.T.M. distillation	
Initial boiling point, °F	320
Percentage evaporated	
5	332
10	334
20	340
30	344
40	350
50	355
60	361
70	370
80	384
90	406
95	424
Final boiling point	458
Residue, percent	1.0
Loss, percent	0
Aromatics, percent	14
Specific gravity	0.796
Hydrogen-carbon ratio	0.163
Net heat of combustion, Btu/lb	18,595

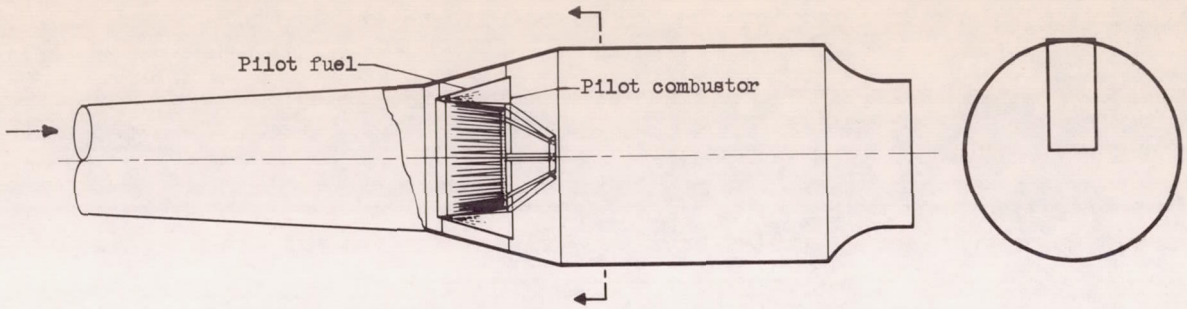

(a) Full-scale ram-jet engine; 48-inch diameter.

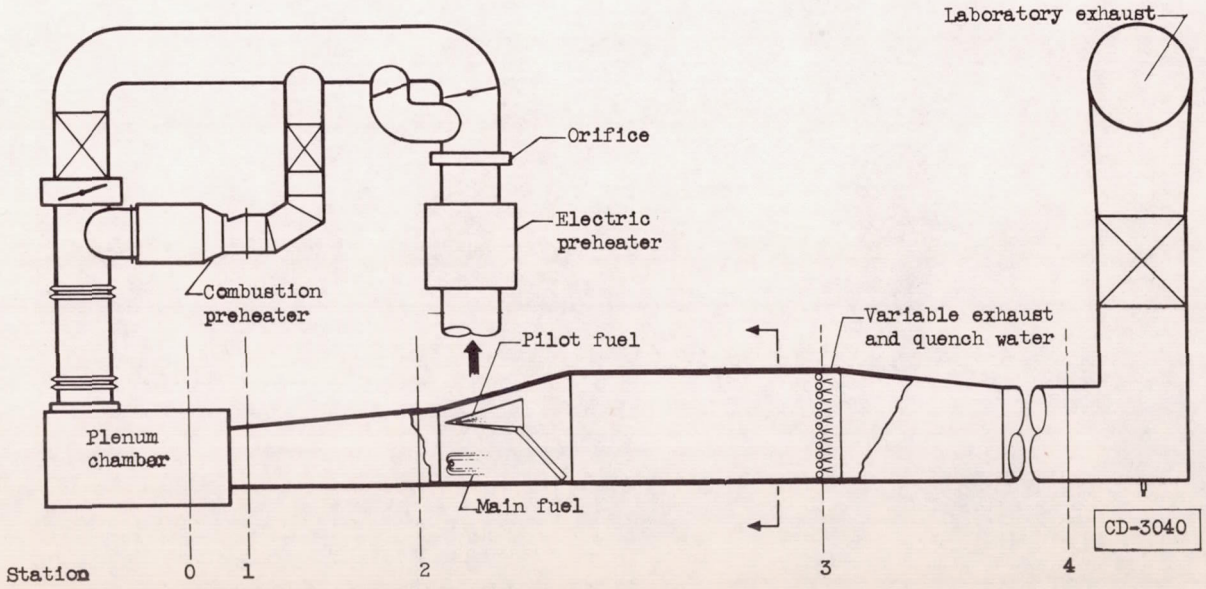

(b) Two-dimensional analog, 10 by 24 inches, with associated ducting.

Figure 1. - Two-dimensional test combustor and comparable full-scale engine.

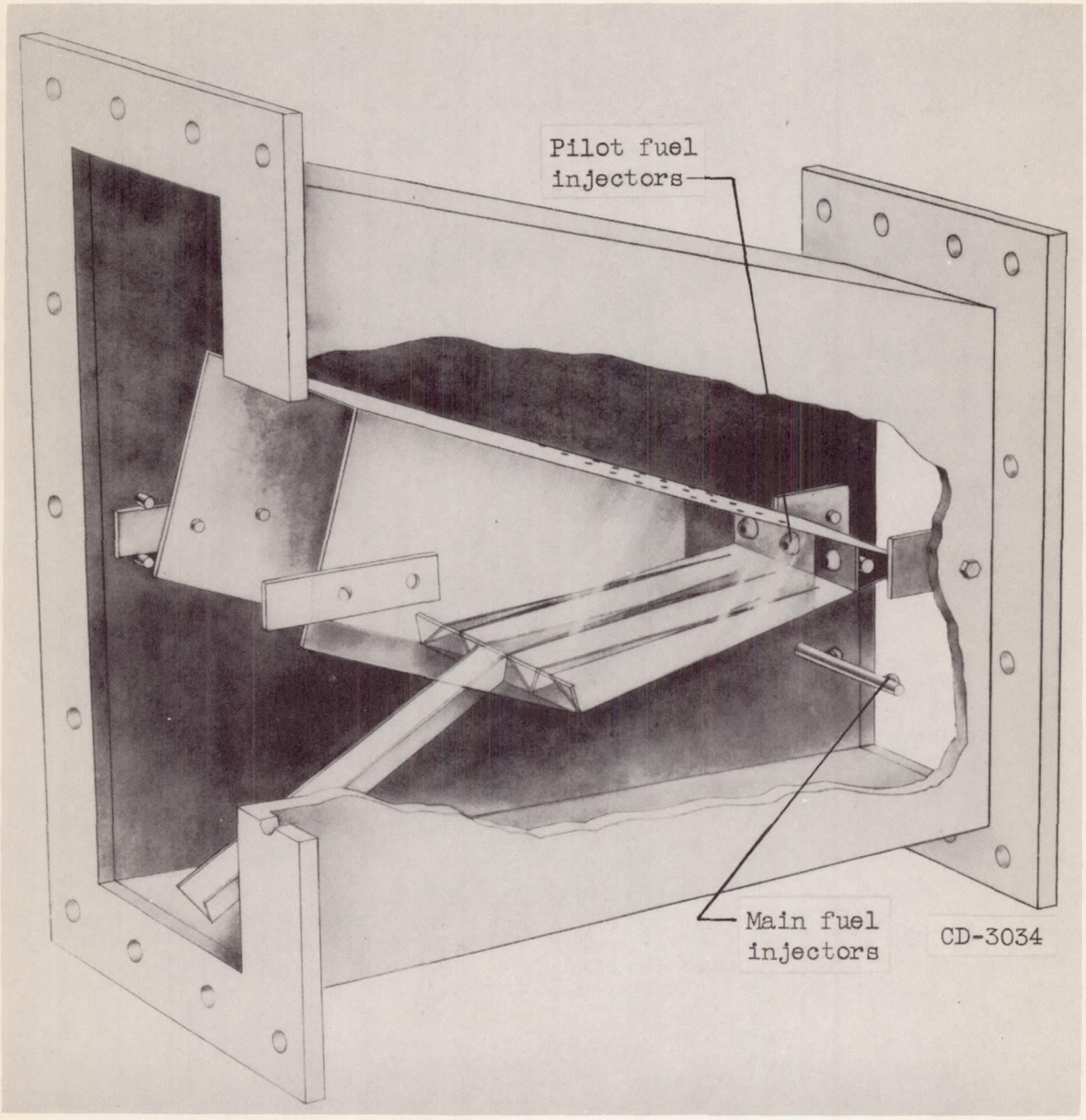

Figure 2. - Two-dimensional ram-jet pilot combustor used in tests.

[redacted]

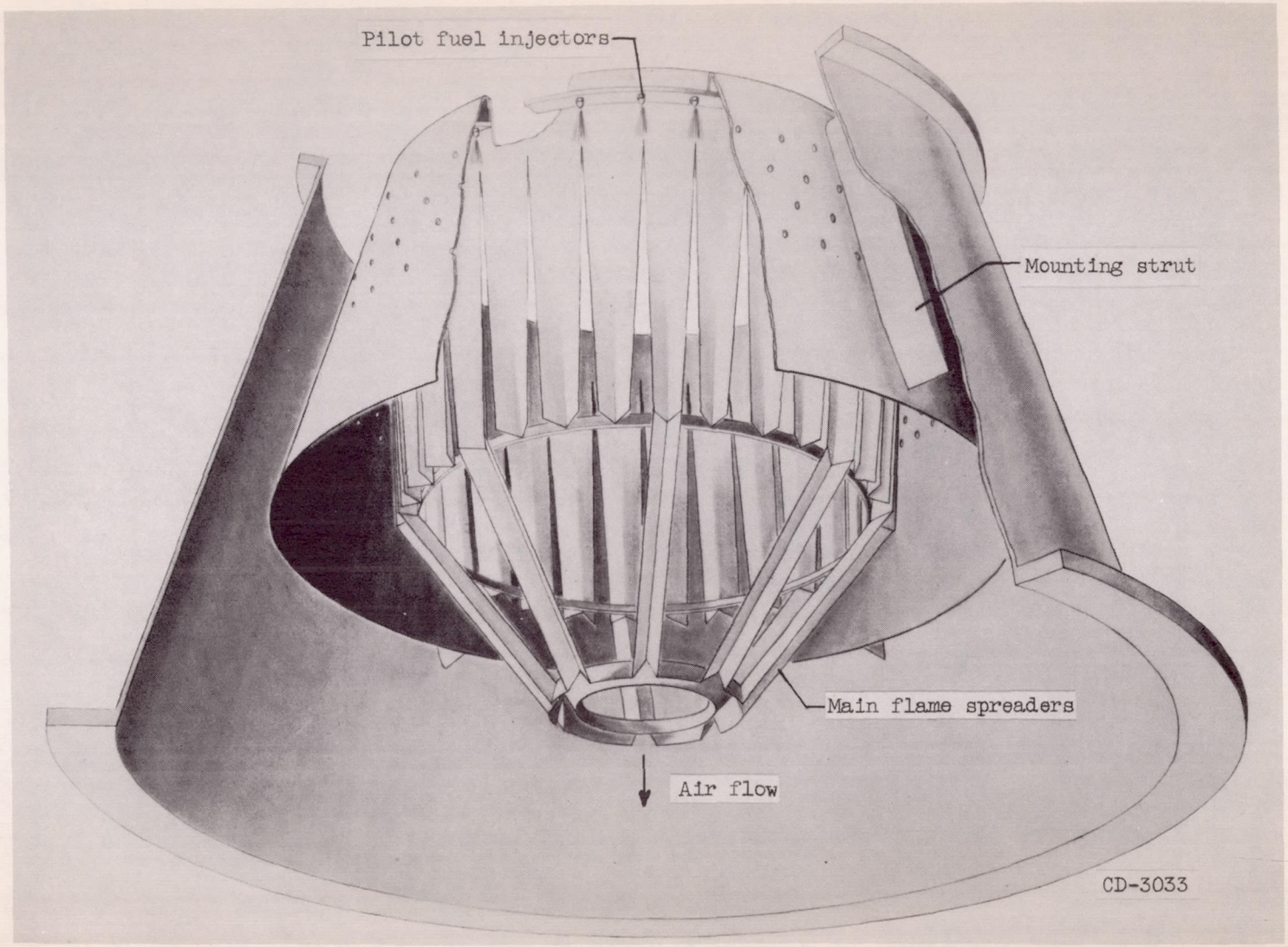

Figure 3. - Full-scale ram-jet pilot combustor designed from two-dimensional tests.

[redacted]

CONFIDENTIAL

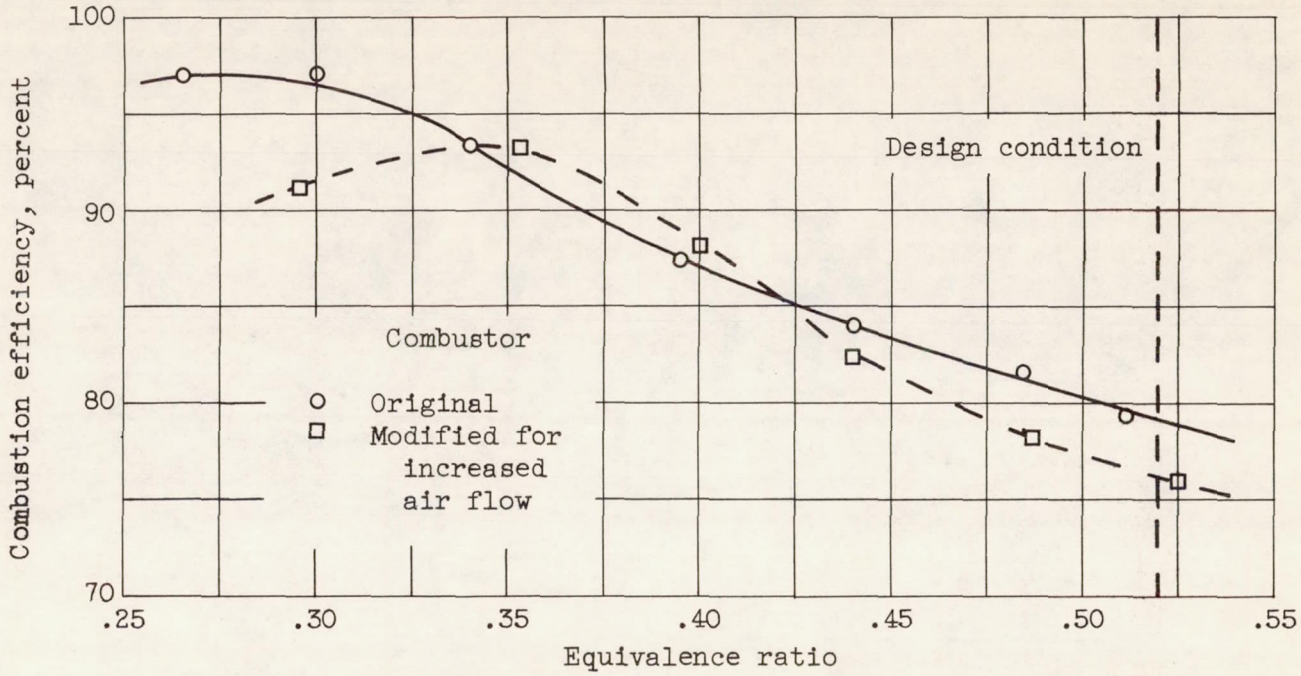

Figure 4. - Effect of increased air flow on combustion efficiency. Main fuel injected through single nozzle rated at 60 gallons per hour and located 5 inches upstream of main flame holder. Inlet conditions: pressure, 11 inches of mercury absolute; temperature, 560° F; Mach number, 0.132.

CONFIDENTIAL

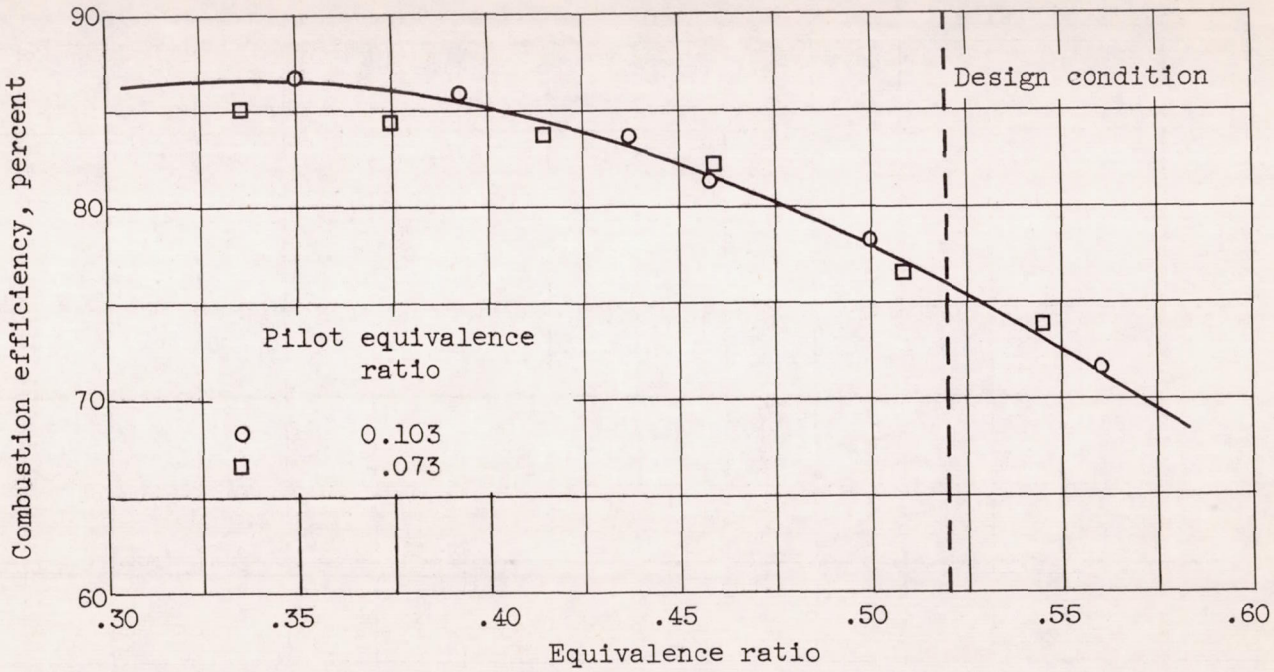

Figure 5. - Effect of increased pilot fuel flow on combustion efficiency. Main fuel injected through single nozzle rated at 60 gallons per hour and located 5 inches upstream of main flame holder. Inlet conditions: pressure, 10 inches of mercury absolute; temperature, 550° F; Mach number, 0.145.

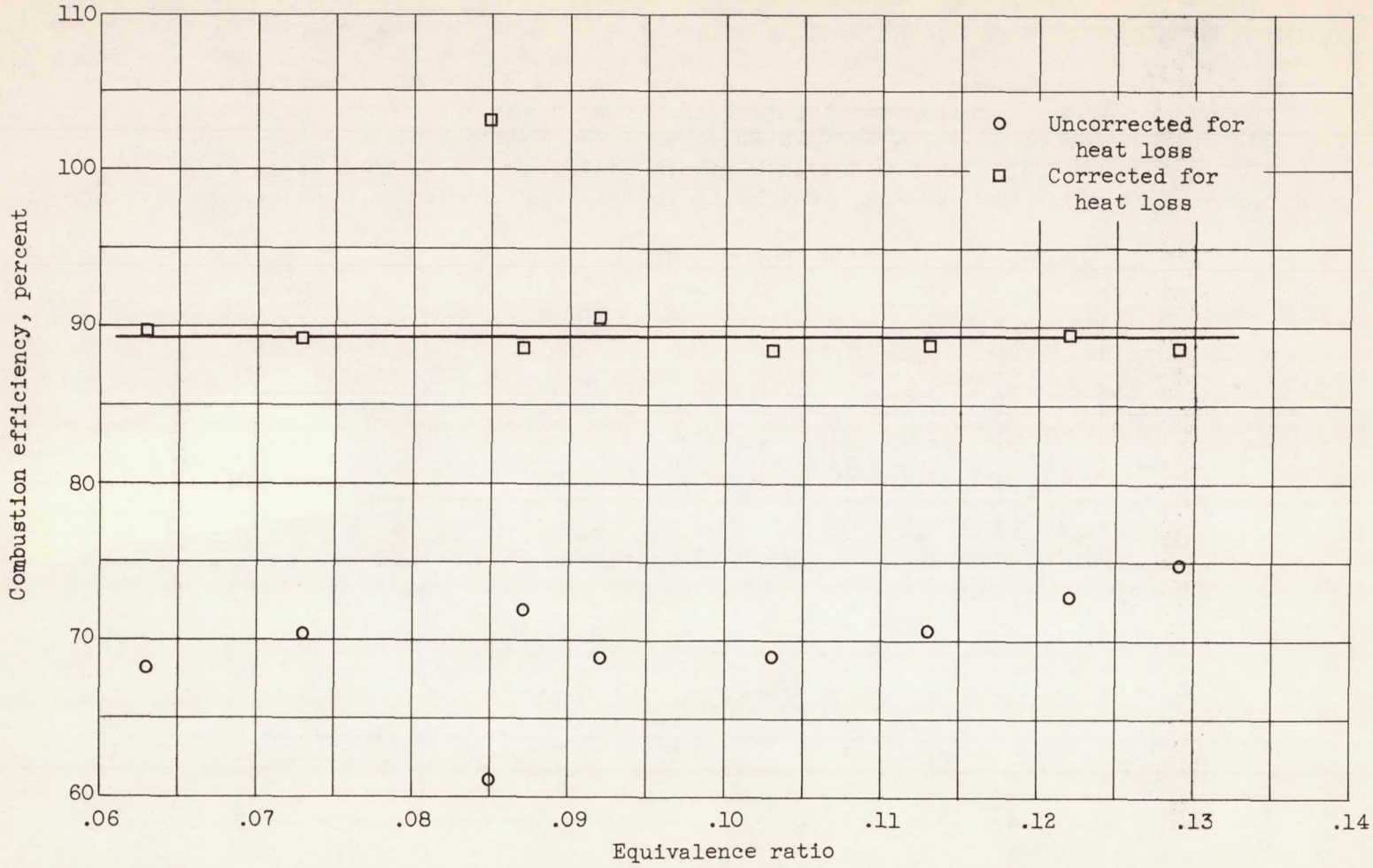

Figure 6. - Effect of pilot equivalence ratio on pilot combustion efficiency; no main fuel injected. Inlet conditions: pressure, 10 inches of mercury absolute; temperature, 550° F; Mach number, 0.145.

[redacted]

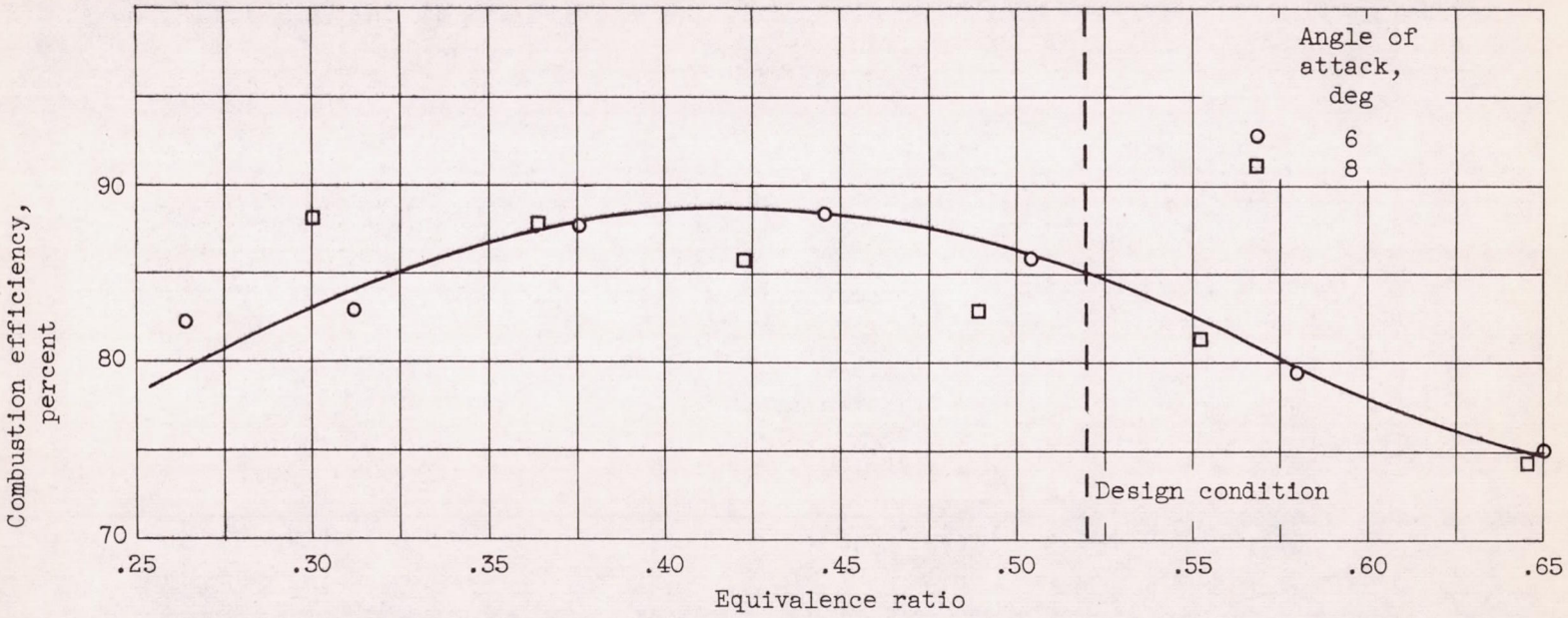

Figure 7. - Effect of pilot mounting angle on combustion efficiency. Main fuel injected through two nozzles rated at 40 gallons per hour and located 16 inches upstream of main flame holder. Inlet conditions: pressure, 10 inches of mercury absolute; temperature, 560° F; Mach number, 0.15.

[redacted]

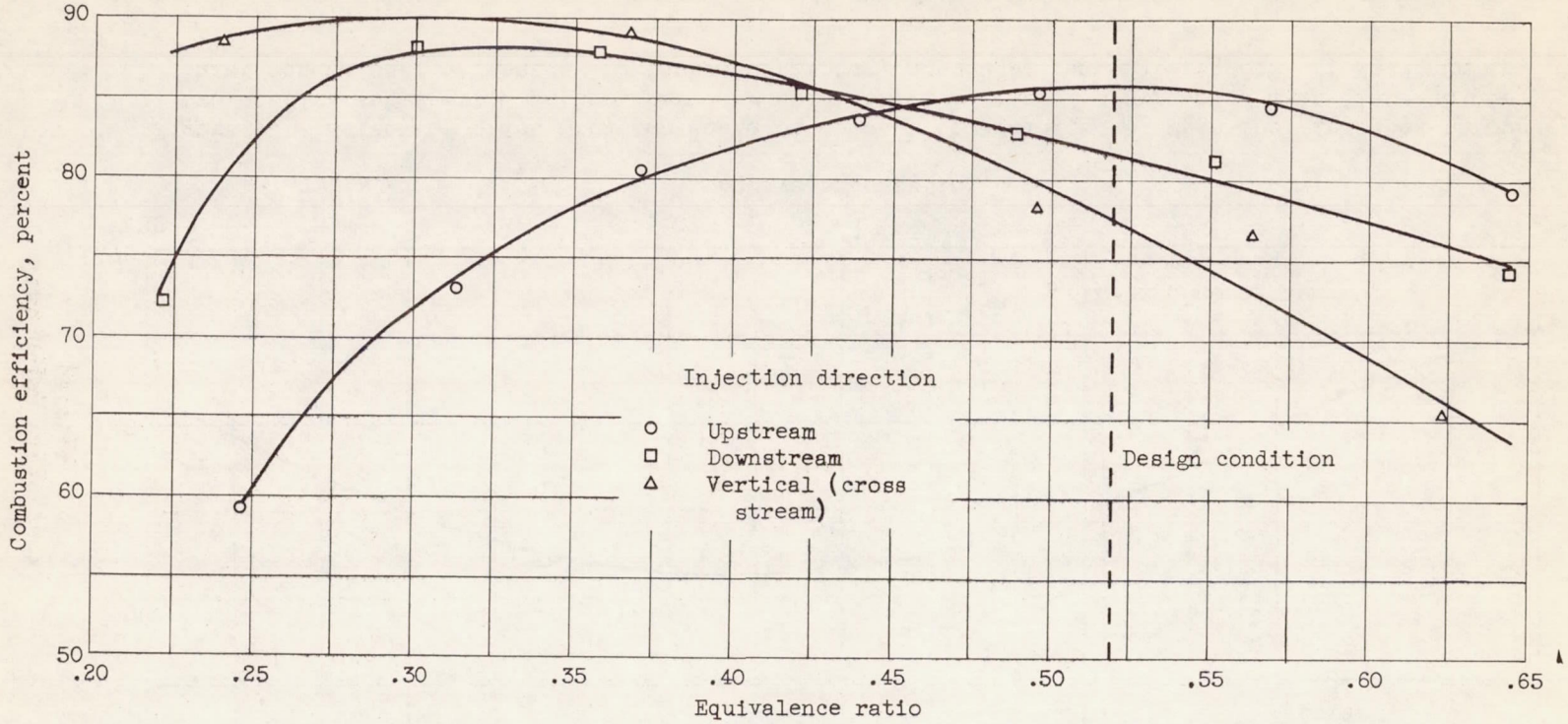

Figure 8. - Effect of fuel-injection direction on combustion efficiency. Main fuel injected through two nozzles rated at 40 gallons per hour and located 16 inches upstream of main flame holder. Inlet conditions: pressure, 10 inches of mercury absolute; temperature, 530° F; Mach number, 0.15.

[redacted]

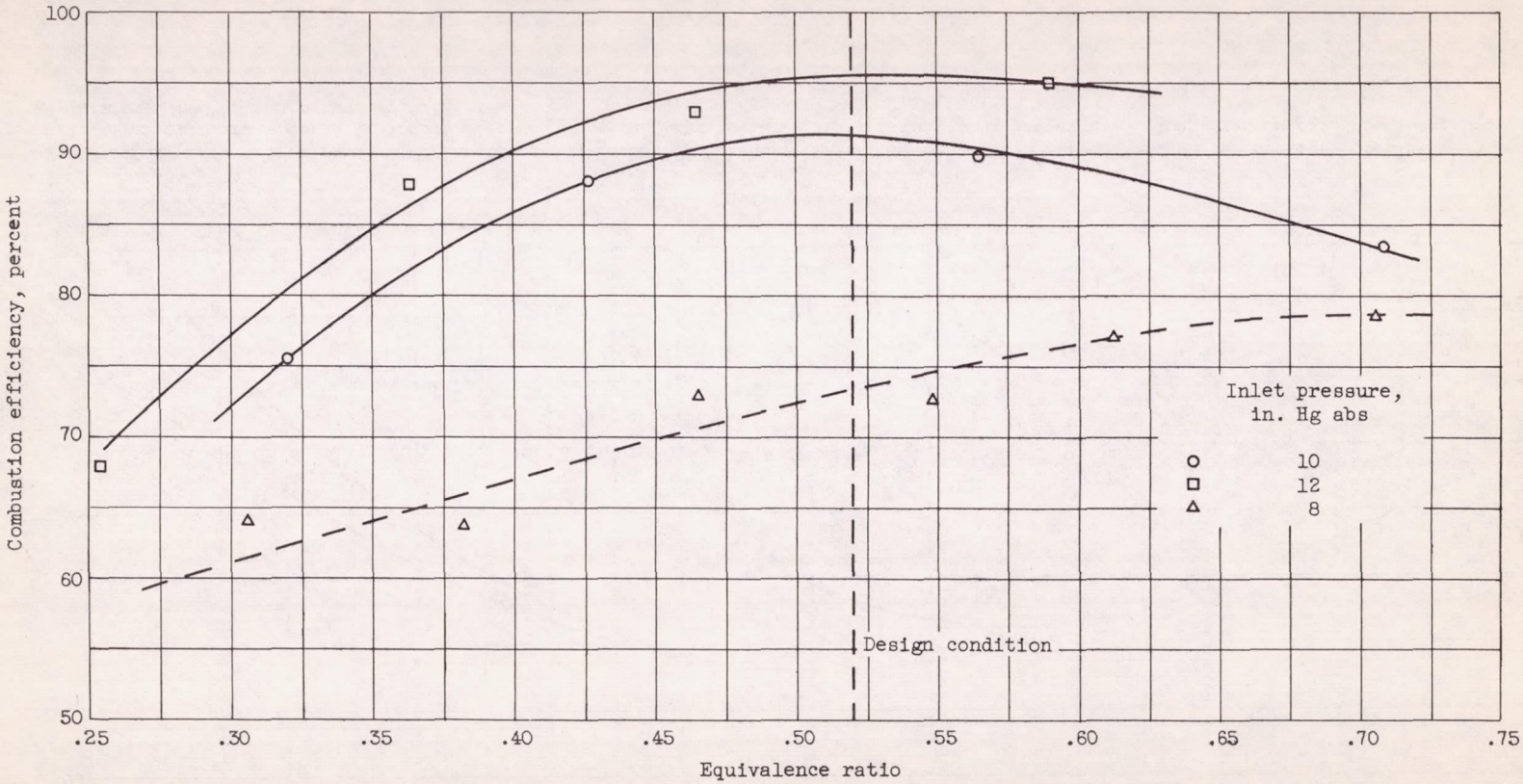

Figure 9. - Effect of inlet total pressure on combustion efficiency. Main fuel injected upstream through two nozzles rated at 40 gallons per hour and located 16 inches upstream of main flame holder. Inlet conditions: temperature, 560° F; Mach number, 0.15.

[redacted]

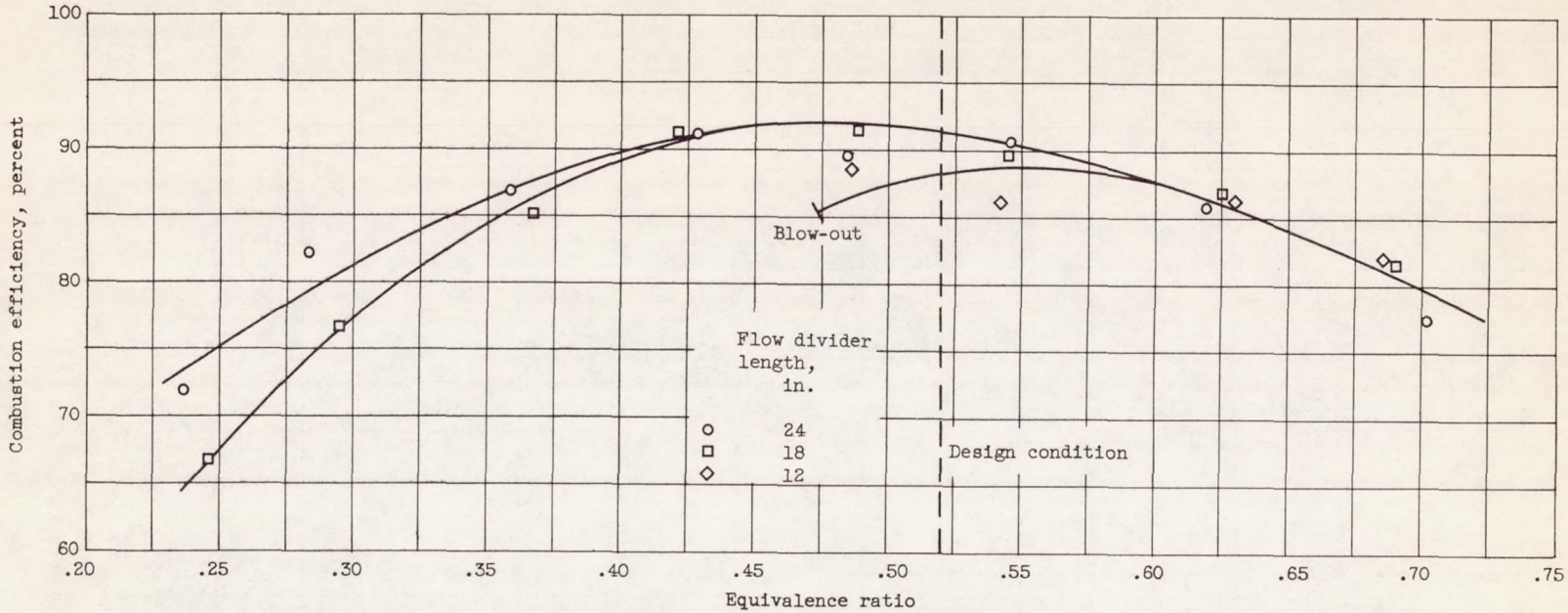

Figure 10. - Effect of flow-divider length on combustion efficiency. Main fuel injected upstream through two nozzles rated at 40 gallons per hour and located 16 inches upstream of main flame holder. Inlet conditions: pressure, 10 inches of mercury absolute; temperature, 530° F; Mach number, 0.15.

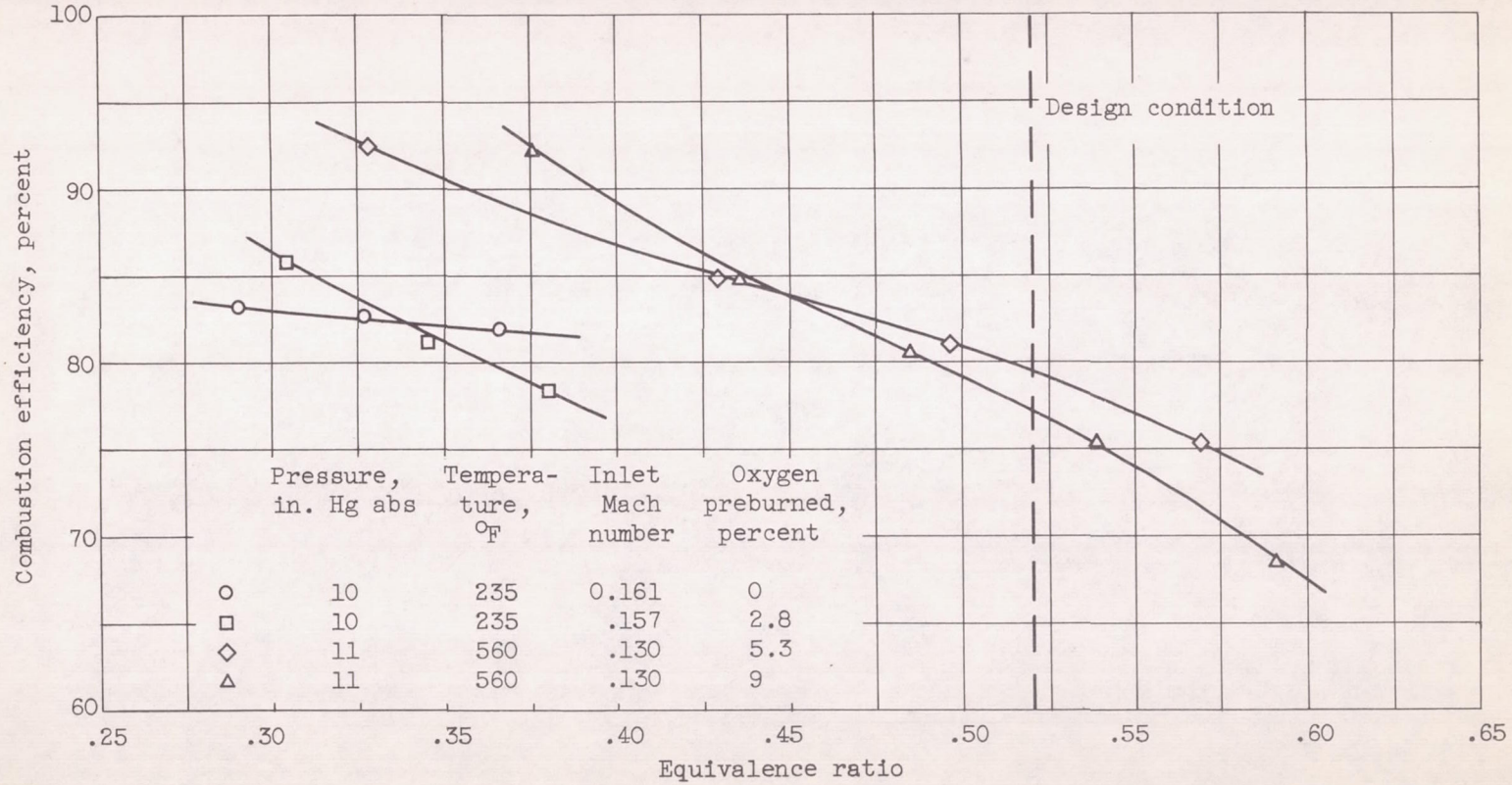

Figure 11. - Effect of vitiation on combustion efficiency. Main fuel injected downstream through single nozzle rated at 60 gallons per hour and located 5 inches upstream of main flame holder.

NACA-Langley - 1-29-54 - 325