NACA RM L54J29

NACA

RESEARCH MEMORANDUM

A PRESSURE-DISTRIBUTION INVESTIGATION OF THE AERODYNAMIC CHARACTERISTICS OF A BODY OF REVOLUTION IN THE VICINITY OF A REFLECTION PLANE AT MACH NUMBERS OF 1.41 AND 2.01

By John P. Gapcynski and Harry W. Carlson

Langley Aeronautical Laboratory
Langley Field, Va.

NATIONAL ADVISORY COMMITTEE
FOR AERONAUTICS
WASHINGTON

January 20, 1955
Declassified January 7, 1959

NATIONAL ADVISORY COMMITTEE FOR AERONAUTICS

RESEARCH MEMORANDUM

A PRESSURE-DISTRIBUTION INVESTIGATION OF THE AERODYNAMIC CHARACTERISTICS OF A BODY OF REVOLUTION IN THE VICINITY OF A REFLECTION PLANE AT MACH NUMBERS OF 1.41 AND 2.01

By John P. Gapcynski and Harry W. Carlson

SUMMARY

A pressure-distribution investigation has been conducted in the Langley 4- by 4-foot supersonic pressure tunnel to determine the change in the aerodynamic characteristics of a blunt-based body of revolution with a fineness ratio of 8 as the position of the body is varied with respect to a flat plate or reflection plane. Tests were made at Mach numbers of 1.41 and 2.01, a Reynolds number, based on body length, of 4.54×10^6, and model incidence angles with respect to the plate of 0° and $\pm 3^\circ$. The data are compared with theoretical results.

For small body-plate separation distances, the body is subject to positive chord-force increments, normal-force increments directed toward the plate, and pitching-moment increments tending to move the model nose away from the plate. As the separation distance is increased (within the region of the reflected nose shock), the direction of these force and moment increments is reversed.

The prediction of the chord-force increments and the variation and order of magnitude of the normal-force increments is very good.

INTRODUCTION

The prediction of the mutual interference effects of wings and bodies in combination is difficult because of the complex nature of the flow fields involved. In the study of this problem, a knowledge of the interference phenomena for configurations where the flow fields are relatively simple would prove to be of great value in establishing the bounds of

validity of existing theory. Also, by a progressive increase in the complexity of the flow fields and an application of the knowledge gained from the relatively simple cases, a much greater insight of the fully integrated wing-body problem may be gained. With this purpose in mind, an investigation was undertaken to determine the change in the aerodynamic characteristics of a body as the position of the body was varied with respect to a flat plate or reflection plane alined with the airstream.

Pressure measurements on the body and the plate have been obtained for several different positions of the model with respect to the plate and for body incidence angles, measured in a plane through the body axis and perpendicular to the plate, of 0° and $\pm 3^{\circ}$. The tests were made in the Langley 4- by 4-foot supersonic pressure tunnel at Mach numbers of 1.41 and 2.01 and a Reynolds number, based on body length, of 4.54×10^{6}. The data are compared with theoretical results.

SYMBOLS

ρ mass density of air

V airspeed

a speed of sound in air

M Mach number, V/a

q dynamic pressure, $\frac{1}{2}\rho V^2$

p free-stream static pressure

p_1 local static pressure

P pressure coefficient, $\frac{p_1 - p}{q}$

L length of body

R local radius of body

r distance normal to body axis

$\beta = \sqrt{M^2 - 1}$

θ body polar angle, deg (see fig. 1)

ϵ angle of incidence of body axis, measured in a plane through the body axis and perpendicular to the plate, deg or radians (see fig. 1)

ψ angular position of orifice row on moveable section of flat plate, deg (see fig. 1)

S body cross-sectional area

x distance from apex of body measured along axis of symmetry

y distance of body nose apex from flat plate

c_n section normal-force coefficient, $\frac{\text{Section normal force}}{2qR}$

c_c section axial-force coefficient, $\frac{\text{Section axial force}}{2qR}$

C_N body normal-force coefficient (positive toward plate), $\frac{\text{Body normal force}}{qS_{max}}$

C_c body-pressure axial-force coefficient (positive toward base of body), $\frac{\text{Body axial force}}{qS_{max}}$

C_m body pitching-moment coefficient (about center of volume, $x/L = 0.598$), $\frac{\text{Body pitching moment}}{qS_{max}L}$

Subscript:

max maximum

DESCRIPTION OF MODEL AND TESTS

A perspective view of the test setup is shown in figure 1, and a photograph of the model mounted in the tunnel is presented in figure 2.

The model was a parabolic body of revolution with an overall fineness ratio of 10. The base of the model was cut off bluntly at a distance of 15 inches from the apex, with a resulting reduction in fineness ratio from 10 to 8. The body was equipped with two rows of 0.043 inch (inside diameter) static-pressure orifices located 180° apart. Each row contained 30 orifices. Provision was made in the model sting for rolling the body about its own axis so that complete pressure coverage could be obtained. The boundary-layer bypass plate, which served as the reflection plane for these tests, was mounted off of the tunnel side wall. Pressure measurements were obtained from a row of orifices located on a moveable section of the plate.

Pressure measurements on the body and on the plate were obtained for several different locations of the model with respect to the plate, from a distance of 0.8 body diameter to that corresponding to free-stream conditions. The body-plate separation distances are given in table 1. The y-coordinate represents the distance, in inches, of the body nose apex from the plate. The term $\frac{2\beta y}{L(1 - \epsilon\beta)}$ is a nondimensional form of this separation distance. In referring to figure 3 it may be noted that, for a value of $\frac{2\beta y}{L(1 - \epsilon\beta)} = 1.0$, the reflected nose Mach wave passes through the center line of the model base, regardless of Mach number or incidence angle. For values of $\frac{2\beta y}{L(1 - \epsilon\beta)} < 1.0$, the reflected Mach wave intersects the body center line forward of the base.

Tests were made for model incidence angles of 0° and ±3° with respect to the plate, at Mach numbers of 1.41 and 2.01, and at a Reynolds number, based on body length, of 4.54×10^6. The test procedure consisted of setting the model roll angle and plate-orifice row angle and obtaining data for the specified body-plate separation distances and body incidence angles. The model roll angle and plate-orifice row angle were then changed and the tests repeated. It should be noted that the major portion of the interference-free data obtained at a Mach number of 1.41 was affected by a disturbance from the leading edge of the bypass plate. Therefore, the interference-free force characteristics which are presented at a Mach number of 1.41 are estimated values based on corrected loading curves. The body characteristics were not influenced by this disturbance at any other separation distance for either Mach number.

A limited amount of data were also obtained with roughness (carborundum grains (No. 60)) added to the leading edge of the bypass plate and to the model nose. At the test Reynolds number, however, no effect of roughness was noted on the body or plate pressures.

Tunnel stagnation conditions were as follows: temperature, 100° F; dewpoint, approximately -35° F; and pressure, 12.2 pounds per square inch absolute at $M = 1.41$ and 14.7 pounds per square inch absolute at $M = 2.01$.

THEORETICAL CONSIDERATIONS

At supersonic speeds the prediction of the aerodynamic characteristics of a body (identified as the primary body in the discussion that follows) in the vicinity of a reflection plane resolves itself into the problem of determining the characteristics of this primary body when immersed in the flow field of an identical interfering body. The theoretical results presented in this paper have been obtained from an adaptation of slender-body theory as developed by Moskowitz (ref. 1) and also from an analysis based on simple buoyancy considerations. In essence, both methods are similar, although the boundary condition of no flow through the body is not satisfied in the buoyancy analysis.

In the method outlined by Moskowitz, the lift and moment (about the nose) of the primary body are given by the equations

$$\text{Lift} = 2qS_2\left(\epsilon + \frac{\bar{v}_2}{V}\right) + \frac{2\pi q}{V}\int_{x_1}^{x_2} R^2\left(\frac{\partial\bar{v}}{\partial x}\right)dx \tag{1}$$

$$\text{Moment} = -\frac{4\pi q}{V}\int_{x_1}^{x_2}\left[(V\epsilon + \bar{v})\,R\,\frac{dR}{dx} + R^2\,\frac{\partial\bar{v}}{\partial x}\right]x\,dx \tag{2}$$

where the subscripts 1 and 2 refer to conditions at the apex and base of the primary body, respectively, and the term $\partial\bar{v}/\partial x$ is evaluated along the center line of the primary body. The upwash $\bar{v}$ generated by the interfering body was determined by the method of reference 2 and is given by the equations

$$\bar{v}_{\epsilon=0} = \frac{0.02VL}{r}\left\{4.8\beta^2\,\frac{r^2}{L^2}\left(1 - 1.6\,\frac{x}{L}\right)\cosh^{-1}\frac{x}{\beta r} + \sqrt{\frac{x^2}{L^2} - \beta^2\,\frac{r^2}{L^2}}\left[2.56\,\frac{x^2}{L^2} - 4.8\,\frac{x}{L} + 2 + 5.12\beta^2\,\frac{r^2}{L^2}\right]\right\} \tag{3}$$

$$\bar{v}_{\epsilon\neq 0} = -\frac{0.025L^2V\epsilon}{r^2}\left\{1.6\beta^2\frac{r^2}{L^2}\left[3.84\frac{x^2}{L^2} - 4.8\frac{x}{L} + 1 + 2.88\beta^2\frac{r^2}{L^2}\right]\cosh^{-1}\frac{x}{\beta r} + \right.$$

$$\sqrt{\frac{x^2}{L^2} - \beta^2\frac{r^2}{L^2}}\left[1.024\frac{x^3}{L^3} - 2.56\frac{x^2}{L^2} + 1.6\frac{x}{L}\left(1 - 7.36\beta^2\frac{r^2}{L^2}\right) + \right.$$

$$\left.\left. 10.24\beta^2\frac{r^2}{L^2}\right]\right\} \tag{4}$$

In the buoyancy calculations, the pressure distribution throughout the flow field of the interfering body was determined by slender-body theory (refs. 2 and 3). The primary body was then superimposed in this field and the additional pressures at the body surface due to the interfering flow field were used to determine the interference increments in normal force, chord force, and pitching moment. The pressure coefficient at any point in the flow field of the interfering body is given by the equation

$$P = 0.064\left\{\left[4.8\frac{x^2}{L^2} - 6\frac{x}{L} + 1.25 + 2.4\beta^2\frac{r^2}{L^2}\right]\cosh^{-1}\frac{x}{\beta r} + \right.$$

$$\left.\sqrt{\frac{x^2}{L^2} - \beta^2\frac{r^2}{L^2}}\left[6 - 7.2\frac{x}{L}\right]\right\} - \frac{1}{V^2}\left(\frac{\partial\varphi}{\partial r}\right)^2 + 4\alpha\left(\frac{R}{r}\right)\cos\theta\frac{dR}{dx} -$$

$$\alpha^2\left[\left(1 - \frac{R^2}{r^2}\right)^2\cos^2\theta + \left(1 + \frac{R^2}{r^2}\right)^2\sin^2\theta\right] + \alpha^2 \tag{5}$$

where

$$\frac{\partial\varphi}{\partial r} = \frac{0.02VL}{r}\left\{4.8\beta^2\frac{r^2}{L^2}\left(1 - 1.6\frac{x}{L}\right)\cosh^{-1}\frac{x}{\beta r} + \right.$$

$$\left.\sqrt{\frac{x^2}{L^2} - \beta^2\frac{r^2}{L^2}}\left[2.56\frac{x^2}{L^2} - 4.8\frac{x}{L} + 2 + 5.12\beta^2\frac{r^2}{L^2}\right]\right\} \tag{6}$$

For body incidence angles other than 0°, there is some question as to the orientation of the body axes and nose Mach waves with respect to the free-stream direction. This question arises because of the application,

at finite angles, of theoretical results derived on the basis of vanishing incidence angles. For the previous calculations it was assumed that the interfering body and its Mach wave were always alined with the airstream. (The flow field, however, was computed for the correct incidence angle.) In the buoyancy analysis the primary body was then superimposed in the flow at the designated incidence angle. In the application of the method outlined by Moskowitz, however, the primary body was alined with the airstream in order to simplify the calculations. The resulting changes in the force characteristics due to changes in the angular position of the primary body were found to be negligible.

The prediction of the variation in pressure on the reflection plane was obtained by slender-body theory (ref. 2). The velocity potential used in the expression for pressure coefficient was obtained by adding the potential of the interfering body to that of the primary body.

PRESENTATION AND DISCUSSION OF RESULTS

Body and Plate Pressures

Representative pressure distributions on the body and the plate are presented for a body incidence angle of 0°. A more thorough pressure-distribution analysis may be made from the data in tables 2 and 3. The accuracy in pressure coefficient is ± 0.01.

The pressure distributions on the body at angular positions of maximum and minimum interference effects ($\theta = 0^{\circ}$ and 180°) are shown in figure 4 for different body-plate separation distances. For a separation distance of $\frac{2\beta y}{L(1 - \epsilon\beta)} = 0.35$, the pressure distributions along the body are presented in figure 5 for a range of body radial angles from 0° to 180°. The experimental results in each case are compared with theoretical pressure variations obtained from buoyancy considerations.

The predictions of the pressures on the side of the body nearest the plate are fairly good, although the magnitude of the pressure increase due to the reflected nose shock is underestimated in each case. On the far side of the body ($90^{\circ} \leq \theta \leq 270^{\circ}$) the experimental and theoretical variations are no longer similar. Since some flow separation would exist in this region because of induced velocities, the poor agreement might be anticipated.

The additional pressure increases which may be noted in the experimental variations at small body-plate separation distances (for example,

in fig. 5, $M = 2.01$, $\theta = 0^{\circ}$, and $x/L = 0.5$) are caused by multiple reflections between the body and the plate.

The pressure distributions on the center line of the moveable section of the reflection plane ($\psi = 0^{\circ}$) are presented in figure 6 for the different body-plate separation distances. A more complete distribution of plate pressures is presented in figure 7 for a separation distance of $\frac{2\beta y}{L(1 - \epsilon\beta)} = 0.35$. The results are compared with slender-body theory.

In general, the agreement between theoretical and experimental results is very good. In each case, however, the intersection of the nose shock with the plate occurs forward of the point indicated by slender-body theory. In an attempt to predict the location of this intersection point with greater accuracy, the body was replaced with a cone of equal apex angle, and the intersection point of the shock wave from the cone was determined by reference 4. The results which are indicated by the small arrow on the axis of each plot show very good agreement with the experimental data except for positions off of the plate center line. In this region, the data reflect the influence of a thickened boundary layer caused by a deviation of the flow from the center of the plate.

Body Normal-Force Distribution

The normal-force loading distributions over the body as a function of body station x/L are presented in figure 8. It should be noted from this figure that the normal-force loading curves are distorted over the forward portion of the body in the region from $x/L = 0.2$ to $x/L = 0.5$. This effect is more pronounced at a Mach number of 1.41 and 2.01. The reason for the existence of these negative increments in the values of section normal force is not known. This distortion of the loading curves will cause inaccuracies in the values of the overall body forces but will not significantly affect the incremental values due to body-plate interference.

The normal-force loading distributions at two representative body-plate separation distances are compared in figure 9 with the results obtained from theoretical considerations. The loading curves obtained by the method of Moskowitz became infinite at the point of intersection of the Mach cone from the interfering body. The method of Moskowitz and the buoyancy technique both fail to give an accurate prediction of the experimental loading distribution over the body.

Body Coefficients

The changes in the values of the aerodynamic characteristics of the body due to interference between model and plate are presented in figure 10 as a function of body-plate separation distance. For a condition of no interference, the experimental values of the body characteristics are presented in the following table:

	M = 1.41			M = 2.01		
	$\epsilon = -3^{\circ}$	$\epsilon = 0^{\circ}$	$\epsilon = 3^{\circ}$	$\epsilon = -3^{\circ}$	$\epsilon = 0^{\circ}$	$\epsilon = 3^{\circ}$
C_C	0.072	0.068	0.073	0.083	0.079	0.083
C_N	-.079	-.017	.053	-.095	-.004	.094
C_m	-.049	.001	.043	-.045	-.001	.043

As the body is moved into the region of the reflected nose shock the chord force decreases. Further movement of the body toward the plate, however, reverses this trend and the chord force increases rapidly as the separation distance becomes small. The initial drag reduction is due to the favorable slope of the after portion of the body. The reflected nose shock striking the boattailed section of the body causes an increase in pressure on this section and a decrease in overall drag. Although the flow between the body and the plate becomes complex for small separation distances, the effect of the reflected nose shock seems to predominate in determining the direction of the chord-force increments. In this case, the shock impinges on the forward portion of the model where the cross-sectional area is increasing and causes an increase in drag. The experimental chord-force increments are compared with the results obtained from buoyancy considerations, and the agreement is very good.

The interference increments in body normal force also exhibit a reversal in sign as the body is moved toward the plate. These increments are negative at first, and then become positive as the body-plate separation distance becomes small. Thus, a body in the vicinity of a reflection plane experiences a force toward the plate for small separation distances with a corresponding moment about the center of volume tending to move the nose away from the plate. As the separation distance becomes greater, the directions of these increments are reversed. The increments in pitching moment in this case are very small.

The trend and order of magnitude of the experimental increments in normal force are predicted very well by both the method of Moskowitz and by the buoyancy technique. The prediction of the increments in pitching moment about the center of volume, as might be expected, is not very good, although the method used by Moskowitz seems to give a more accurate indication of the experimental values than that obtained from simple buoyancy considerations.

It may be noted that the variations obtained from the buoyancy technique extend beyond a value of $\frac{2\beta y}{L(1 - \epsilon\beta)} = 1.0$. Although the reflected nose Mach wave passes through the center line of the model base at this separation distance, it intersects the body contour forward of this point. Therefore, the body is still subject to the action of the reflection plane at a separation distance of $\frac{2\beta y}{L(1 - \epsilon\beta)} = 1.0$.

CONCLUDING REMARKS

The changes in the aerodynamic characteristics of a blunt-based parabolic body of revolution with a fineness ratio of 8 have been determined at Mach numbers of 1.41 and 2.01 as the position of the body was varied with respect to a flat plate or reflection plane alined with the airstream. Data were obtained for body incidence angles of 0° and $\pm 3^{\circ}$ with respect to the plate and for a Reynolds number, based on body length, of 4.54×10^{6}.

For small body-plate separation distances, the body was subject to positive increments in chord force. At greater separation distances (within the region of the reflected nose shock), these increments became negative, indicating regions of favorable interference. The prediction of the chord-force increments by buoyancy techniques was very good.

The variations of the increments in normal force and pitching moment were similar to those exhibited by the chord-force increments. For small separation distances, the body was subject to normal-force increments directed toward the plate and to pitching-moment increments tending to move the nose away from the plate. As the separation distance became greater, however, the directions of the normal-force and pitching-moment increments were reversed.

The trend and order of magnitude of the normal-force increments were predicted very well by both the method of Moskowitz and the buoyancy technique. The predictions of the pitching-moment variations, however, were poor.

Langley Aeronautical Laboratory,
National Advisory Committee for Aeronautics,
Langley Field, Va., October 19, 1954.

REFERENCES

1. Moskowitz, Barry: Approximate Theory for Calculation of Lift of Bodies, Afterbodies, and Combinations of Bodies. NACA TN 2669, 1952.

2. Lighthill, M. J.: Supersonic Flow Past Bodies of Revolution. R. & M. No. 2003, British A.R.C., 1945.

3. Allen, H. Julian, and Perkins, Edward W.: A Study of Effects of Viscosity on Flow Over Slender Inclined Bodies of Revolution. NACA Rep. 1048, 1951. (Supersedes NACA TN 2044.)

4. Staff of the Computing Section, Center of Analysis (Under Direction of Zdeněk Kopal): Tables of Supersonic Flow Around Cones. Tech. Rep. No. 1, M.I.T., 1947.

TABLE 1.- BODY-PLATE SEPARATION DISTANCES

$\epsilon = 0^{\circ}$		$\epsilon = 3^{\circ}$		$\epsilon = -3^{\circ}$	
y, in.	$\frac{2\beta y}{L(1 - \epsilon\beta)}$	y, in.	$\frac{2\beta y}{L(1 - \epsilon\beta)}$	y, in.	$\frac{2\beta y}{L(1 - \epsilon\beta)}$
M = 1.41					
9.43	1.25	6.46	0.903	7.42	0.935
7.42	.983	5.51	.770	6.46	.814
6.47	.857	4.55	.636	5.51	.695
5.51	.730	3.60	.503	4.55	.573
4.55	.603	2.64	.369	3.60	.454
3.60	.477	1.51	.211	3.08	.388
2.64	.350				
1.51	.200				
M = 2.01					
16.36	3.80	15.97	4.10	16.74	3.57
4.23	.984	3.68	.941	5.19	1.105
3.69	.858	3.14	.803	4.64	.990
3.14	.730	2.60	.665	4.10	.873
2.60	.605	2.05	.524	3.55	.756
2.05	.477	1.51	.368	3.08	.655
1.51	.351				

TABLE 2.- PRESSURE-COEFFICIENT DATA FOR THE BODY

$$\left[M = 1.41\right]$$

$\epsilon = 0^\circ$ $\quad \frac{2\beta y}{L(1-\epsilon\beta)} = .98$

$\frac{x}{L}$	θ						
	0	15	30	45	60	75	90
.033	.130	.118	.122	.126	.128	.129	.134
.067	.125	.113	.116	.112	.115	.117	.118
.100	.103	.092	.098	.093	.101	.097	.102
.133	.089	.079	.079	.078	.083	.082	.083
.167	.071	.061	.063	.062	.066	.066	.067
.200	.057	.048	.051	.048	.052	.054	.054
.233	.052	.041	.045	.040	.045	.043	.045
.267	.052	.039	.047	.041	.049	.047	.042
.300							
.333	.033	.024	.026	.025	.028	.027	.026
.367	.032	.016	.021	.015	.019	.020	.018
.400	.016	.008	.008	.007	.008	.007	.005
.433	.000	-.008	-.006	-.013	-.008	-.007	-.008
.467	-.011	-.023	-.023	-.023	-.019	-.020	-.020
.500	-.019	-.027	-.030	-.032	-.025	-.027	-.024
.533	-.023	-.034	-.037	-.037	-.032	-.029	-.035
.567	-.034	-.046	-.045	-.044	-.042	-.040	-.042
.600	-.039	-.052	-.053	-.055	-.051	-.053	-.049
.633	-.047	-.053	-.050	-.054	-.046	-.050	-.047
.667	-.057	-.061	-.056	-.055	-.050	-.053	-.054
.700	-.056	-.064	-.063	-.063	-.056	-.057	-.059
.733	-.064	-.066	-.063	-.065	-.056	-.058	-.060
.767	-.053	-.064	-.064	-.069	-.062	-.059	-.057
.800	-.061	-.066	-.063	-.066	-.060	-.060	-.056
.833	-.059	-.066	-.065	-.068	-.066	-.066	-.064
.867	-.050	-.046	-.049	-.057	-.061	-.061	-.057
.900	-.030	-.044	-.038	-.040	-.044	-.061	-.061
.933	-.029	-.034	-.032	-.037	-.031	-.030	-.030
.967							
1.000	.054	.007	-.006	-.019	-.023	-.013	-.023

$\frac{x}{L}$	θ						
	180	165	150	135	120	105	90
.033	.122	.122	.119	.116	.119	.118	.117
.067	.113	.108	.113	.108	.108	.111	.111
.100	.106	.096	.103	.097	.100	.099	.099
.133	.086	.079	.083	.081	.081	.081	.083
.167	.070	.060	.066	.062	.065	.064	.064
.200	.060	.050	.052	.049	.050	.052	.051
.233	.052	.036	.044	.041	.043	.044	.045
.267							
.300	.027	.017	.024	.021	.024	.029	.034
.333	.017	.008	.016	.014	.018	.019	.019
.367	.016	.002	.010	.010	.011	.014	.015
.400	.004	-.005	-.003	-.004	-.002	.000	.002
.433	-.008	-.017	-.014	-.014	-.014	-.011	-.009
.467	-.018	-.026	-.023	-.024	-.023	-.022	-.020
.500	-.018	-.030	-.029	-.029	-.028	-.026	-.025
.533	-.026	-.037	-.038	-.037	-.036	-.034	-.033
.567	-.036	-.046	-.044	-.044	-.044	-.041	-.040
.600	-.041	-.049	-.050	-.049	-.049	-.048	-.047
.633	-.042	-.053	-.054	-.051	-.054	-.049	-.050
.667	-.048	-.053	-.057	-.056	-.058	-.056	-.054
.700	-.056	-.065	-.068	-.066	-.067	-.065	-.065
.733	-.056	-.060	-.066	-.064	-.068	-.066	-.061
.767	-.060	-.064	-.067	-.065	-.067	-.064	-.064
.800	-.057	-.059	-.065	-.064	-.065	-.062	-.063
.833	-.057	-.059	-.062	-.063	-.063	-.061	-.061
.867							
.900	-.056	-.057	-.032	-.036	-.041	-.039	-.037
.933	-.050	-.046	-.024	-.026	-.028	-.023	-.025
.967	-.035	-.029	-.023	-.026	-.026	-.021	-.018
1.000	.076	.007	-.017	-.020	.007	.015	.010

$\epsilon = 0^\circ$ $\quad \frac{2\beta y}{L(1-\epsilon\beta)} = .86$

$\frac{x}{L}$	θ						
	0	15	30	45	60	75	90
.033	.131	.124	.125	.125	.129	.132	.125
.067	.121	.112	.111	.110	.114	.117	.111
.100	.100	.098	.099	.096	.100	.100	.096
.133	.086	.077	.077	.078	.082	.083	.081
.167	.065	.058	.061	.060	.065	.065	.064
.200	.055	.056	.051	.052	.054	.057	.050
.233	.056	.053	.047	.048	.054	.058	.055
.267	.052	.044	.043	.047	.050	.052	.047
.300							
.333	.032	.028	.028	.027	.028	.028	.025
.367	.032	.024	.022	.031	.022	.024	.017
.400	.015	.014	.015	.007	.009	.011	.005
.433	-.001	-.003	-.007	-.009	-.008	-.007	-.012
.467	-.015	-.018	-.016	-.018	-.015	-.019	-.024
.500	-.024	-.024	-.025	-.036	-.022	-.022	-.029
.533	-.026	-.034	-.035	-.033	-.032	-.033	-.037
.567	-.041	-.045	-.047	-.044	-.041	-.043	-.046
.600	-.046	-.049	-.053	-.050	-.047	-.047	-.052
.633	-.050	-.053	-.050	-.047	-.043	-.046	-.050
.667	-.058	-.054	-.057	-.055	-.050	-.049	-.054
.700	-.062	-.062	-.059	-.060	-.054	-.051	-.061
.733	-.062	-.055	-.057	-.060	-.059	-.054	-.062
.767	-.034	-.033	-.035	-.048	-.055	-.054	-.060
.800	-.029	-.032	-.033	-.037	-.035	-.037	-.061
.833	-.040	-.032	-.036	-.036	-.039	-.035	-.039
.867	-.041	-.043	-.039	-.038	-.036	-.033	-.036
.900	-.043	-.047	-.045	-.042	-.036	-.035	-.040
.933	-.044	-.031	-.039	-.037	-.038	-.035	-.038
.967							
1.000	.052	-.007	-.002	-.003	-.017	-.002	-.013

$\frac{x}{L}$	θ						
	180	165	150	135	120	105	90
.033	.118	.119	.122	.119	.118	.121	.115
.067	.108	.111	.112	.111	.110	.113	.108
.100	.097	.096	.101	.099	.100	.103	.099
.133	.080	.081	.082	.082	.082	.085	.080
.167	.065	.061	.065	.067	.064	.070	.061
.200	.052	.049	.051	.052	.051	.057	.051
.233	.043	.042	.043	.043	.047	.047	.052
.267							
.300	.025	.025	.026	.026	.028	.032	.030
.333	.016	.017	.019	.020	.020	.023	.021
.367	.015	.009	.014	.014	.015	.016	.015
.400	.001	-.003	-.001	.001	.001	.004	.000
.433	-.012	-.011	-.014	-.012	-.010	-.007	-.011
.467	-.022	-.021	-.025	-.022	-.021	-.019	-.022
.500	-.022	-.027	-.029	-.028	-.026	-.025	-.028
.533	-.030	-.037	-.038	-.035	-.034	-.033	-.032
.567	-.042	-.044	-.043	-.043	-.041	-.038	-.042
.600	-.045	-.048	-.049	-.050	-.047	-.045	-.048
.633	-.046	-.051	-.051	-.050	-.050	-.046	-.048
.667	-.054	-.055	-.057	-.053	-.054	-.052	-.057
.700	-.060	-.059	-.064	-.064	-.061	-.059	-.061
.733	-.060	-.061	-.067	-.064	-.061	-.059	-.063
.767	-.066	-.063	-.066	-.066	-.063	-.061	-.062
.800	-.060	-.058	-.061	-.061	-.057	-.051	-.050
.833	-.060	-.059	-.052	-.049	-.049	-.043	-.042
.867							
.900	-.041	-.039	-.029	-.029	-.037	-.032	-.038
.933	-.027	-.027	-.023	-.022	-.027	-.026	-.028
.967	-.016	-.015	-.023	-.022	-.021	-.013	-.014
1.000	.078	.014	-.009	-.007	.005	.014	.009

TABLE 2.- PRESSURE-COEFFICIENT DATA FOR THE BODY - Continued

$$\left[M = 1.41\right]$$

$\epsilon = 0°$ $\quad \frac{2\beta y}{L(1-\epsilon\beta)} = .73$

$\frac{x}{L}$	θ						
	0	15	30	45	60	75	90
.033	.132	.129	.124	.121	.128	.130	.128
.067	.125	.118	.115	.115	.119	.121	.117
.100	.104	.104	.101	.094	.096	.097	.099
.133	.090	.084	.084	.079	.081	.083	.080
.167	.074	.070	.068	.068	.074	.080	.073
.200	.067	.064	.062	.058	.062	.063	.060
.233	.060	.055	.049	.050	.051	.050	.047
.267	.053	.047	.051	.043	.049	.049	.047
.300							
.333	.036	.033	.029	.026	.030	.028	.026
.367	.036	.025	.021	.018	.023	.023	.020
.400	.019	.013	.010	.009	.010	.009	.007
.433	.002	.000	-.007	-.009	-.006	-.008	-.010
.467	-.014	-.014	-.020	-.018	-.019	-.019	-.021
.500	-.020	-.021	-.020	-.025	-.025	-.029	-.026
.533	-.024	-.029	-.036	-.038	-.034	-.038	-.038
.567	-.038	-.040	-.042	-.043	-.040	-.047	-.042
.600	-.042	-.044	-.051	-.050	-.046	-.045	-.047
.633	-.003	-.011	-.032	-.045	-.044	-.043	-.046
.667	-.009	-.009	-.014	-.025	-.020	-.043	-.047
.700	-.020	-.018	-.024	-.026	-.019	-.019	-.035
.733	-.033	-.029	-.031	-.030	-.024	-.024	-.026
.767	-.028	-.031	-.037	-.038	-.036	-.034	-.034
.800	-.036	-.037	-.041	-.041	-.041	-.038	-.036
.833	-.042	-.044	-.048	-.046	-.041	-.043	-.041
.867	-.044	-.050	-.053	-.052	-.044	-.042	-.040
.900	-.050	-.054	-.058	-.057	-.052	-.047	-.045
.933	-.055	-.036	-.040	-.042	-.047	-.048	-.044
.967							
1.000	.049	-.008	-.014	-.018	-.010	-.002	-.006

$\frac{x}{L}$	θ						
	180	165	150	135	120	105	90
.033	.120	.128	.117	.118	.118	.117	.119
.067	.111	.117	.111	.108	.110	.106	.112
.100	.103	.109	.103	.098	.101	.100	.100
.133	.083	.088	.082	.079	.082	.080	.082
.167	.068	.069	.064	.061	.068	.069	.073
.200	.058	.055	.053	.052	.053	.054	.057
.233	.053	.048	.046	.045	.046	.046	.052
.267							
.300	.031	.030	.028	.028	.031	.033	.034
.333	.024	.024	.020	.020	.021	.020	.024
.367	.025	.017	.015	.014	.014	.015	.017
.400	.010	.006	-.001	.000	.001	.002	.005
.433	-.003	-.006	-.014	-.010	-.011	-.008	-.007
.467	-.013	-.018	-.023	-.022	-.021	-.021	-.019
.500	-.016	-.024	-.029	-.029	-.028	-.028	-.024
.533	-.024	-.032	-.038	-.036	-.034	-.036	-.034
.567	-.035	-.038	-.043	-.040	-.043	-.042	-.039
.600	-.039	-.042	-.050	-.048	-.048	-.048	-.044
.633	-.042	-.045	-.051	-.048	-.050	-.050	-.046
.667	-.049	-.049	-.057	-.055	-.055	-.051	-.043
.700	-.055	-.054	-.065	-.059	-.055	-.052	-.041
.733	-.056	-.051	-.060	-.057	-.049	-.044	-.035
.767	-.052	-.049	-.054	-.048	-.045	-.042	-.033
.800	-.039	-.036	-.047	-.044	-.043	-.041	-.035
.833	-.033	-.031	-.043	-.042	-.040	-.040	-.036
.867							
.900	-.028	-.028	-.031	-.032	-.036	-.039	-.037
.933	-.021	-.022	-.026	-.024	-.027	-.029	-.032
.967	-.015	-.014	-.022	-.016	-.016	-.017	-.019
1.000	.074	.009	-.014	-.017	.006	.011	.013

$\epsilon = 0°$ $\quad \frac{2\beta y}{L(1-\epsilon\beta)} = .60$

$\frac{x}{L}$	θ						
	0	15	30	45	60	75	90
.033	.133	.129	.124	.122	.125	.128	.127
.067	.128	.119	.114	.109	.113	.112	.114
.100	.111	.107	.103	.110	.113	.109	.098
.133	.095	.087	.080	.075	.078	.081	.082
.167	.075	.074	.070	.067	.070	.071	.072
.200	.069	.065	.059	.058	.057	.058	.060
.233	.060	.058	.053	.048	.049	.051	.050
.267	.054	.051	.049	.044	.048	.051	.046
.300							
.333	.033	.034	.029	.026	.025	.027	.028
.367	.032	.027	.025	.021	.020	.020	.021
.400	.014	.016	.009	.006	.003	.005	.008
.433	-.003	.001	-.010	-.008	-.010	-.010	-.009
.467	-.019	-.015	-.015	-.017	-.016	-.019	-.014
.500	-.019	-.005	-.021	-.030	-.031	-.031	-.028
.533	.011	.015	.001	-.017	-.028	-.033	-.038
.567	-.006	.001	-.003	-.008	-.014	-.016	-.034
.600	-.003	-.005	-.010	-.011	-.015	-.014	-.023
.633	-.005	-.009	-.013	-.014	-.014	-.012	-.016
.667	-.019	-.018	-.023	-.026	-.025	-.022	-.023
.700	-.032	-.034	-.036	-.035	-.029	-.028	-.028
.733	-.037	-.039	-.043	-.045	-.039	-.037	-.033
.767	-.044	-.049	-.051	-.053	-.049	-.045	-.042
.800	-.056	-.056	-.057	-.058	-.055	-.051	-.049
.833	-.059	-.062	-.063	-.062	-.057	-.054	-.049
.867	-.063	-.067	-.068	-.067	-.063	-.057	-.051
.900	-.070	-.068	-.071	-.071	-.069	-.063	-.056
.933	-.066	-.051	-.057	-.062	-.066	-.061	-.050
.967							
1.000	.037	-.008	-.018	-.024	-.009	-.002	-.006

$\frac{x}{L}$	θ						
	180	165	150	135	120	105	90
.033	.121	.126	.118	.117	.114	.117	.118
.067	.110	.115	.111	.107	.103	.106	.108
.100	.100	.103	.102	.100	.099	.103	.101
.133	.083	.087	.085	.085	.082	.086	.084
.167	.068	.070	.067	.065	.063	.064	.069
.200	.058	.057	.053	.054	.053	.056	.057
.233	.053	.051	.048	.046	.046	.049	.050
.267							
.300	.031	.035	.030	.029	.028	.034	.031
.333	.026	.026	.023	.022	.020	.024	.021
.367	.021	.019	.015	.014	.012	.016	.016
.400	.006	.007	.001	.000	-.003	.003	.002
.433	-.005	-.004	-.011	-.012	-.014	-.011	-.010
.467	-.016	-.015	-.024	-.023	-.026	-.022	-.022
.500	-.019	-.022	-.029	-.031	-.032	-.029	-.026
.533	-.028	-.030	-.039	-.040	-.039	-.037	-.037
.567	-.039	-.035	-.043	-.045	-.044	-.034	-.029
.600	-.045	-.043	-.047	-.045	-.042	-.029	-.022
.633	-.043	-.040	-.044	-.042	-.039	-.025	-.019
.667	-.043	-.038	-.043	-.038	-.038	-.032	-.028
.700	-.045	-.036	-.048	-.048	-.048	-.040	-.036
.733	-.035	-.030	-.044	-.043	-.045	-.040	-.038
.767	-.037	-.031	-.043	-.044	-.045	-.044	-.045
.800	-.031	-.027	-.042	-.045	-.044	-.039	-.042
.833	-.033	-.028	-.042	-.042	-.041	-.039	-.046
.867							
.900	-.035	-.034	-.039	-.040	-.043	-.045	-.047
.933	-.032	-.030	-.036	-.035	-.041	-.042	-.044
.967	-.028	-.026	-.031	-.029	-.037	-.033	-.036
1.000	.059	.000	-.023	-.018	.005	.017	.020

TABLE 2.- PRESSURE-COEFFICIENT DATA FOR THE BODY - Continued.

[M = 1.41]

$\epsilon = 0°$ $\quad \frac{2\beta y}{L(1-\epsilon\beta)} = .48$

x/L	θ = 0	15	30	45	60	75	90
.033	.127	.128	.121	.122	.124	.129	.123
.067	.126	.122	.117	.113	.116	.117	.115
.100	.106	.106	.104	.099	.098	.099	.096
.133	.090	.086	.083	.080	.081	.086	.081
.167	.073	.076	.072	.070	.071	.071	.068
.200	.067	.062	.058	.056	.052	.056	.054
.233	.058	.057	.053	.050	.052	.054	.050
.267	.054	.052	.051	.046	.047	.051	.044
.300							
.333	.034	.033	.030	.027	.028	.028	.025
.367	.030	.026	.023	.022	.020	.022	.018
.400	.065	.061	.046	.008	.010	.007	.002
.433	.049	.050	.046	.034	.026	.009	-.006
.467	.031	.032	.025	.023	.021	.016	.001
.500	.020	.018	.013	.007	.008	.005	-.002
.533	.011	.008	.002	-.002	-.004	-.002	-.008
.567	-.006	-.008	-.007	-.013	-.009	-.007	-.015
.600	-.014	-.017	-.018	-.021	-.017	-.014	-.018
.633	-.027	-.027	-.024	-.037	-.021	-.018	-.023
.667	-.043	-.039	-.039	-.040	-.037	-.034	-.036
.700	-.043	-.047	-.044	-.050	-.039	-.038	-.036
.733	-.056	-.053	-.052	-.060	-.057	-.052	-.054
.767	-.069	-.066	-.060	-.063	-.057	-.055	-.057
.800	-.078	-.074	-.069	-.058	-.063	-.056	-.053
.833	-.079	-.081	-.076	-.077	-.070	-.066	-.063
.867	-.080	-.082	-.078	-.079	-.073	-.069	-.066
.900	-.056	-.074	-.077	-.081	-.076	-.073	-.071
.933	-.081	-.080	-.070	-.064	-.062	-.068	-.069
.967							
1.000	.019	-.022	-.031	-.038	-.012	-.008	-.011

x/L	θ = 180	165	150	135	120	105	90
.033	.118	.126	.121	.115	.118	.119	.116
.067	.112	.116	.118	.108	.116	.108	.111
.100	.101	.101	.105	.098	.104	.103	.100
.133	.084	.087	.086	.080	.085	.083	.083
.167	.067	.070	.070	.062	.067	.067	.066
.200	.059	.056	.057	.051	.055	.056	.055
.233	.052	.049	.051	.048	.050	.053	.050
.267							
.300	.031	.036	.034	.026	.032	.035	.032
.333	.024	.026	.026	.018	.024	.026	.019
.367	.023	.018	.020	.012	.015	.019	.014
.400	.008	.004	.010	-.002	.002	.003	-.002
.433	-.008	-.005	-.007	-.014	-.011	-.009	-.010
.467	-.019	-.017	-.016	-.024	-.017	-.007	.003
.500	-.019	-.022	-.017	-.022	-.012	-.003	.001
.533	-.020	-.022	-.018	-.022	-.016	-.008	-.006
.567	-.024	-.025	-.024	-.025	-.019	-.017	-.016
.600	-.024	-.024	-.027	-.030	-.024	-.022	-.020
.633	-.023	-.022	-.028	-.034	-.029	-.027	-.028
.667	-.027	-.023	-.032	-.038	-.033	-.031	-.032
.700	-.036	-.032	-.039	-.045	-.036	-.038	-.042
.733	-.035	-.031	-.039	-.043	-.034	-.040	-.048
.767	-.040	-.038	-.042	-.046	-.048	-.048	-.054
.800	-.040	-.037	-.042	-.042	-.042	-.047	-.053
.833	-.043	-.040	-.043	-.047	-.044	-.049	-.055
.867							
.900	-.048	-.044	-.048	-.051	-.054	-.055	-.063
.933	-.046	-.044	-.047	-.049	-.053	-.052	-.060
.967	-.041	-.040	-.040	-.042	-.040	-.029	-.028
1.000	.030	-.015	-.029	-.018	.000	.009	.010

$\epsilon = 0°$ $\quad \frac{2\beta y}{L(1-\epsilon\beta)} = .35$

x/L	θ = 0	15	30	45	60	75	90
.033	.137	.129	.131	.122	.121	.125	.127
.067	.131	.122	.122	.113	.114	.114	.120
.100	.109	.106	.105	.097	.095	.097	.101
.133	.097	.091	.089	.084	.083	.084	.084
.167	.079	.075	.071	.065	.064	.064	.068
.200	.070	.066	.062	.057	.056	.056	.057
.233	.061	.057	.053	.048	.046	.048	.051
.267	.057	.051	.053	.045	.043	.045	.048
.300							
.333	.091	.094	.094	.080	.074	.060	.051
.367	.082	.079	.078	.073	.068	.059	.054
.400	.063	.061	.057	.053	.050	.046	.042
.433	.043	.041	.038	.031	.028	.028	.025
.467	.031	.028	.020	.010	.011	.011	.010
.500	.016	.017	.015	.002	.003	.002	.005
.533	.003	.001	-.002	-.005	-.006	-.002	-.004
.567	-.019	-.021	-.016	-.013	-.012	-.009	-.004
.600	-.033	-.034	-.033	-.028	-.028	-.024	-.017
.633	-.047	-.047	-.044	-.040	-.038	-.034	-.026
.667	-.067	-.061	-.063	-.056	-.055	-.049	-.042
.700	-.067	-.071	-.070	-.068	-.064	-.061	-.055
.733	-.080	-.083	-.082	-.081	-.078	-.073	-.064
.767	-.091	-.089	-.088	-.086	-.083	-.077	-.071
.800	-.099	-.097	-.095	-.090	-.089	-.082	-.074
.833	-.095	-.099	-.098	-.098	-.094	-.088	-.078
.867	-.099	-.095	-.089	-.097	-.096	-.088	-.080
.900	-.092	-.097	-.094	-.097	-.094	-.082	-.081
.933	-.095	-.096	-.096	-.094	-.092	-.091	-.084
.967							
1.000	.013	-.020	-.027	-.031	-.020	-.016	-.015

x/L	θ = 180	165	150	135	120	105	90
.033	.122	.128	.121	.117	.117	.119	.121
.067	.116	.118	.115	.107	.109	.111	.113
.100	.104	.103	.103	.097	.099	.098	.102
.133	.088	.089	.085	.082	.080	.082	.085
.167	.076	.072	.069	.067	.066	.068	.067
.200	.063	.058	.054	.054	.051	.055	.056
.233	.057	.053	.051	.045	.046	.052	.049
.267							
.300	.037	.037	.031	.027	.029	.028	.030
.333	.029	.027	.023	.018	.024	.030	.044
.367	.025	.023	.024	.015	.029	.043	.048
.400	.020	.019	.018	.014	.022	.030	.035
.433	.015	.016	.010	.007	.011	.016	.022
.467	.007	.008	.002	-.001	-.002	.004	.010
.500	.007	.005	-.004	-.008	-.005	.003	.011
.533	-.004	-.003	-.012	-.016	-.009	-.002	-.001
.567	-.014	-.013	-.021	-.022	-.014	-.011	-.013
.600	-.018	-.016	-.025	-.024	-.021	-.021	-.023
.633	-.018	-.014	-.029	-.027	-.029	-.028	-.031
.667	-.025	-.022	-.033	-.032	-.032	-.033	-.039
.700	-.036	-.029	-.039	-.041	-.045	-.048	-.055
.733	-.040	-.035	-.044	-.046	-.054	-.058	-.066
.767	-.048	-.043	-.054	-.058	-.063	-.066	-.073
.800	-.050	-.043	-.053	-.056	-.063	-.066	-.072
.833	-.055	-.052	-.060	-.061	-.066	-.067	-.074
.867							
.900	-.068	-.064	-.067	-.067	-.074	-.078	-.084
.933	-.065	-.063	-.064	-.061	-.067	-.065	-.069
.967	-.059	-.054	-.063	-.057	-.052	-.039	-.041
1.000	.014	-.025	-.037	-.021	-.011	-.005	-.004

TABLE 2.- PRESSURE-COEFFICIENT DATA FOR THE BODY - Continued

$$\left[M = 1.41\right]$$

$\epsilon = 0°$ $\qquad \dfrac{2\beta y}{L(1-\epsilon\beta)} = .20$

$\frac{x}{L}$	θ						
	0	15	30	45	60	75	90
.033	.142	.137	.128	.125	.123	.123	.128
.067	.134	.126	.119	.114	.115	.113	.116
.100	.116	.107	.103	.098	.097	.094	.097
.133	.101	.092	.088	.082	.082	.082	.084
.167	.149	.152	.141	.090	.075	.067	.067
.200	.151	.148	.142	.127	.114	.105	.094
.233	.140	.134	.126	.114	.105	.099	.094
.267	.117	.129	.122	.107	.094	.091	.086
.300							
.333	.113	.103	.098	.088	.083	.075	.072
.367	.095	.088	.083	.078	.074	.067	.065
.400	.063	.059	.055	.048	.051	.054	.051
.433	.043	.035	.028	.024	.021	.021	.024
.467	.016	.004	-.003	-.002	-.001	.001	.000
.500	-.014	-.023	-.021	-.020	-.016	-.009	-.008
.533	-.022	-.039	-.041	-.036	-.033	-.029	-.020
.567	-.044	-.061	-.060	-.053	-.044	-.038	-.034
.600	-.071	-.079	-.078	-.072	-.067	-.057	-.050
.633	-.084	-.097	-.090	-.084	-.074	-.065	-.059
.667	-.100	-.114	-.105	-.100	-.090	-.082	-.070
.700	-.101	-.116	-.112	-.105	-.099	-.092	-.083
.733	-.109	-.119	-.117	-.115	-.111	-.101	-.093
.767	-.087	-.114	-.119	-.114	-.112	-.105	-.099
.800	-.121	-.125	-.121	-.108	-.117	-.108	-.102
.833	-.107	-.117	-.117	-.118	-.115	-.109	-.101
.867	-.107	-.111	-.111	-.118	-.116	-.109	-.104
.900	-.101	-.109	-.108	-.114	-.116	-.115	-.110
.933	-.086	-.087	-.091	-.101	-.102	-.103	-.102
.967							
1.000	.036	.021	.020	.002	.007	.008	.007

$\frac{x}{L}$	θ						
	180	165	150	135	120	105	90
.033	.127	.128	.123	.117	.115	.117	.118
.067	.118	.116	.118	.107	.107	.111	.110
.100	.108	.104	.105	.097	.099	.097	.102
.133	.093	.089	.090	.082	.080	.082	.083
.167	.077	.073	.074	.068	.065	.067	.076
.200	.067	.061	.065	.055	.063	.075	.093
.233	.074	.070	.075	.068	.074	.084	.096
.267							
.300	.064	.067	.068	.058	.059	.068	.078
.333	.059	.058	.061	.045	.051	.057	.068
.367	.057	.051	.055	.045	.052	.062	.068
.400	.040	.038	.038	.032	.033	.035	.039
.433	.029	.024	.025	.019	.017	.020	.022
.467	.016	.009	.014	.006	.004	.006	.005
.500	.011	.001	.011	.002	.000	-.002	-.001
.533	-.002	-.007	-.002	-.014	-.016	-.015	-.018
.567	-.014	-.018	-.018	-.027	-.031	-.033	-.039
.600	-.022	-.026	-.027	-.038	-.041	-.045	-.052
.633	-.023	-.029	-.033	-.043	-.045	-.052	-.058
.667	-.039	-.041	-.041	-.053	-.055	-.059	-.066
.700	-.041	-.049	-.051	-.060	-.067	-.072	-.081
.733	-.054	-.057	-.062	-.073	-.079	-.085	-.093
.767	-.068	-.067	-.074	-.084	-.088	-.097	-.099
.800	-.067	-.070	-.073	-.083	-.089	-.093	-.098
.833	-.077	-.077	-.081	-.088	-.092	-.099	-.102
.867							
.900	-.082	-.079	-.089	-.094	-.094	-.098	-.096
.933	-.078	-.076	-.088	-.087	-.086	-.087	-.084
.967	-.077	-.071	-.077	-.074	-.063	-.054	-.047
1.000	.036	.010	.008	.001	.012	.011	.014

TABLE 2.- PRESSURE-COEFFICIENT DATA FOR THE BODY - Continued.

[M = 1.41]

$\epsilon = 3°$ $\frac{2\beta y}{L(1-\epsilon\beta)} = .90$

x/L	θ = 0	15	30	45	60	75	90
.033	.100	.091	.104	.100	.105	.112	.127
.067	.094	.086	.090	.089	.092	.100	.115
.100	.069	.067	.077	.075	.077	.082	.096
.133	.057	.053	.059	.058	.061	.068	.082
.167	.039	.038	.044	.040	.044	.050	.063
.200	.031	.032	.036	.032	.036	.040	.051
.233	.031	.031	.035	.030	.037	.050	.052
.267	.025	.021	.031	.027	.029	.034	.042
.300							
.333	.010	.012	.014	.009	.010	.018	.024
.367	.008	.003	.011	.005	.007	.008	.018
.400	-.003	-.004	.000	-.006	-.006	-.003	.006
.433	-.017	-.017	-.015	-.020	-.020	-.019	-.012
.467	-.027	-.030	-.026	-.033	-.032	-.028	-.024
.500	-.033	-.037	-.028	-.030	-.034	-.032	-.026
.533	-.033	-.041	-.039	-.040	-.037	-.035	-.026
.567	-.040	-.047	-.046	-.047	-.045	-.042	-.035
.600	-.049	-.052	-.050	-.049	-.048	-.048	-.044
.633	-.047	-.051	-.046	-.048	-.053	-.056	-.049
.667	-.051	-.054	-.051	-.053	-.057	-.058	-.054
.700	-.058	-.057	-.053	-.053	-.059	-.061	-.060
.733	-.057	-.054	-.052	-.056	-.063	-.060	-.055
.767	-.057	-.054	-.050	-.054	-.063	-.062	-.060
.800	-.040	-.029	-.050	-.054	-.064	-.067	-.061
.833	-.043	-.020	-.020	-.028	-.038	-.054	-.059
.867	-.037	-.023	-.020	-.027	-.033	-.036	-.037
.900	-.041	-.029	-.023	-.030	-.035	-.038	-.035
.933	-.034	-.026	-.024	-.032	-.033	-.034	-.033
.967							
1.000	.013	.010	.011	.011	.017	.016	.009

x/L	θ = 180	165	150	135	120	105	90
.033	.155	.156	.150	.139	.127	.118	.114
.067	.147	.145	.144	.135	.121	.116	.108
.100	.135	.134	.136	.123	.113	.107	.096
.133	.115	.115	.114	.101	.090	.082	.080
.167	.097	.096	.095	.085	.076	.068	.063
.200	.081	.081	.081	.071	.062	.055	.052
.233	.068	.070	.068	.062	.054	.047	.049
.267							
.300	.057	.047	.051	.040	.036	.028	.030
.333	.043	.037	.039	.031	.028	.023	.020
.367	.036	.031	.035	.025	.020	.013	.015
.400	.020	.019	.017	.011	.006	.000	.000
.433	.004	.006	.006	-.002	-.006	-.011	-.010
.467	-.005	-.006	-.007	-.014	-.018	-.021	-.020
.500	-.011	-.012	-.014	-.019	-.023	-.028	-.026
.533	-.022	-.023	-.023	-.028	-.034	-.037	-.035
.567	-.031	-.032	-.034	-.036	-.042	-.044	-.041
.600	-.038	-.039	-.041	-.043	-.048	-.049	-.047
.633	-.044	-.044	-.047	-.048	-.053	-.054	-.050
.667	-.049	-.049	-.051	-.051	-.057	-.056	-.051
.700	-.058	-.064	-.064	-.063	-.066	-.069	-.066
.733	-.064	-.065	-.065	-.064	-.069	-.064	-.057
.767	-.068	-.069	-.070	-.064	-.068	-.068	-.064
.800	-.069	-.066	-.065	-.060	-.070	-.069	-.058
.833	-.067	-.070	-.067	-.066	-.066	-.066	-.057
.867							
.900	-.073	-.074	-.070	-.064	-.056	-.042	-.031
.933	-.067	-.066	-.058	-.048	-.045	-.036	-.026
.967	-.056	-.046	-.042	-.037	-.031	-.021	-.013
1.000	-.003	-.002	-.004	.001	-.002	-.001	.003

$\epsilon = 3°$ $\frac{2\beta y}{L(1-\epsilon\beta)} = .77$

x/L	θ = 0	15	30	45	60	75	90
.033	.096	.092	.097	.098	.104	.113	.127
.067	.091	.080	.087	.086	.094	.102	.115
.100	.071	.063	.071	.070	.076	.086	.097
.133	.059	.049	.058	.054	.060	.069	.082
.167	.044	.038	.047	.045	.056	.066	.066
.200	.039	.036	.041	.039	.043	.048	.058
.233	.035	.026	.031	.028	.033	.039	.046
.267	.028	.023	.031	.028	.035	.039	.048
.300							
.333	.013	.009	.013	.010	.013	.019	.026
.367	.012	.002	.007	.006	.008	.012	.018
.400	-.004	-.009	-.001	-.004	-.003	-.009	.003
.433	-.016	-.021	-.017	-.021	-.018	-.017	-.009
.467	-.028	-.034	-.028	-.029	-.027	-.028	-.022
.500	-.034	-.037	-.031	-.034	-.031	-.032	-.025
.533	-.034	-.040	-.042	-.042	-.037	-.038	-.031
.567	-.043	-.051	-.046	-.048	-.040	-.041	-.037
.600	-.047	-.054	-.050	-.050	-.051	-.051	-.048
.633	-.046	-.051	-.049	-.048	-.048	-.051	-.047
.667	-.027	-.027	-.048	-.050	-.055	-.056	-.057
.700	-.039	-.025	-.021	-.023	-.041	-.058	-.056
.733	-.041	-.032	-.025	-.024	-.026	-.035	-.054
.767	-.038	-.026	-.028	-.031	-.034	-.039	-.038
.800	-.032	-.031	-.028	-.033	-.035	-.037	-.036
.833	-.035	-.039	-.030	-.033	-.040	-.045	-.044
.867	-.033	-.031	-.030	-.034	-.037	-.039	-.041
.900	-.036	-.036	-.035	-.040	-.041	-.045	-.043
.933	-.034	-.035	-.031	-.036	-.035	-.038	-.037
.967							
1.000	.045	.021	.030	.029	.025	.012	.010

x/L	θ = 180	165	150	135	120	105	90
.033	.155	.155	.147	.137	.127	.116	.111
.067	.145	.147	.145	.132	.125	.116	.103
.100	.136	.134	.133	.122	.114	.103	.095
.133	.114	.113	.110	.101	.092	.082	.076
.167	.095	.094	.094	.084	.079	.071	.067
.200	.083	.080	.078	.070	.069	.056	.053
.233	.072	.073	.072	.064	.059	.048	.043
.267							
.300	.050	.048	.051	.044	.041	.033	.031
.333	.040	.039	.042	.030	.031	.022	.019
.367	.035	.032	.036	.026	.023	.016	.011
.400	.021	.019	.018	.010	.007	.002	.002
.433	.006	.004	.004	-.002	-.004	-.011	-.011
.467	-.007	-.008	-.009	-.014	-.015	-.020	-.022
.500	-.014	-.016	-.015	-.023	-.022	-.028	-.029
.533	-.024	-.026	-.025	-.029	-.032	-.036	-.036
.567	-.031	-.035	-.034	-.039	-.039	-.045	-.043
.600	-.039	-.041	-.042	-.046	-.047	-.052	-.050
.633	-.043	-.046	-.046	-.050	-.049	-.053	-.049
.667	-.053	-.057	-.053	-.053	-.056	-.064	-.056
.700	-.061	-.064	-.063	-.066	-.063	-.064	-.057
.733	-.065	-.069	-.066	-.064	-.063	-.066	-.050
.767	-.071	-.072	-.067	-.069	-.064	-.054	-.037
.800	-.068	-.070	-.067	-.061	-.041	-.040	-.035
.833	-.064	-.064	-.057	-.052	-.044	-.040	-.033
.867							
.900	-.055	-.057	-.051	-.051	-.045	-.043	-.036
.933	-.049	-.051	-.044	-.043	-.037	-.034	-.029
.967	-.044	-.041	-.034	-.035	-.028	-.026	-.015
1.000	.016	-.004	-.003	.004	.007	.010	.024

TABLE 2.- PRESSURE-COEFFICIENT DATA FOR THE BODY - Continued

$$\left[M = 1.41\right]$$

$\epsilon = 3°$ $\quad \frac{2\beta y}{L(1-\epsilon\beta)} = .64$

$\frac{x}{L}$	θ = 0	15	30	45	60	75	90
.033	.096	.088	.093	.130	.104	.114	.125
.067	.090	.082	.084	.124	.094	.105	.110
.100	.069	.069	.077	.116	.091	.103	.097
.133	.059	.051	.052	.093	.063	.069	.079
.167	.046	.043	.044	.083	.054	.064	.067
.200	.043	.034	.034	.071	.040	.050	.054
.233	.035	.027	.033	.066	.036	.044	.047
.267	.028	.022	.029	.069	.033	.041	.042
.300							
.333	.013	.008	.010	.046	.014	.021	.022
.367	.012	.001	.004	.043	.007	.013	.018
.400	-.002	-.008	-.007	.030	-.003	.002	.003
.433	-.016	-.022	-.023	.014	-.020	-.015	-.010
.467	-.031	-.031	-.030	.007	-.024	-.025	-.019
.500	-.033	-.039	-.039	-.004	-.032	-.034	-.030
.533	-.022	-.027	-.045	-.007	-.039	-.034	-.035
.567	-.032	-.020	-.017	.015	-.038	-.037	-.036
.600	-.027	-.021	-.013	.022	-.018	-.017	-.038
.633	-.029	-.020	-.013	.022	-.017	-.018	-.019
.667	-.028	-.028	-.023	.011	-.028	-.023	-.024
.700	-.033	-.038	-.034	.005	-.032	-.030	-.032
.733	-.038	-.037	-.035	-.001	-.038	-.035	-.034
.767	-.038	-.040	-.040	-.007	-.042	-.041	-.042
.800	-.043	-.044	-.044	-.009	-.046	-.045	-.046
.833	-.044	-.048	-.045	-.012	-.049	-.045	-.047
.867	-.043	-.047	-.047	-.014	-.051	-.049	-.049
.900	-.048	-.052	-.048	-.016	-.051	-.051	-.052
.933	-.046	-.045	-.044	-.009	-.048	-.046	-.046
.967							
1.000	.048	.020	.023	.060	.022	.014	.008

$\frac{x}{L}$	θ = 180	165	150	135	120	105	90
.033	.153	.154	.143	.170	.125	.121	.111
.067	.144	.148	.140	.169	.120	.116	.103
.100	.135	.135	.131	.157	.113	.109	.100
.133	.113	.115	.110	.139	.095	.088	.080
.167	.096	.095	.093	.121	.079	.075	.069
.200	.082	.082	.078	.106	.065	.062	.055
.233	.072	.074	.071	.098	.056	.056	.048
.267							
.300	.051	.053	.049	.078	.038	.037	.027
.333	.041	.040	.038	.067	.025	.027	.018
.367	.033	.033	.033	.057	.020	.019	.012
.400	.020	.019	.017	.045	.005	.005	.000
.433	.007	.006	.003	.033	-.008	-.006	-.011
.467	-.006	-.005	-.010	.020	-.020	-.021	-.025
.500	-.016	-.017	-.019	.013	-.027	-.027	-.034
.533	-.026	-.026	-.028	.004	-.036	-.037	-.038
.567	-.032	-.034	-.035	-.003	-.044	-.043	-.043
.600	-.041	-.042	-.044	-.010	-.049	-.047	-.047
.633	-.046	-.046	-.048	-.013	-.052	-.043	-.026
.667	-.054	-.050	-.054	-.018	-.039	-.029	-.022
.700	-.061	-.058	-.058	-.014	-.054	-.048	-.038
.733	-.061	-.054	-.054	-.015	-.045	-.040	-.033
.767	-.056	-.052	-.052	-.014	-.043	-.041	-.039
.800	-.056	-.049	-.044	-.009	-.048	-.043	-.039
.833	-.049	-.047	-.047	-.010	-.049	-.045	-.041
.867							
.900	-.051	-.054	-.048	-.064	-.048	-.045	-.039
.933	-.049	-.050	-.048	-.060	-.045	-.041	-.035
.967	-.049	-.046	-.044	-.057	-.037	-.029	-.022
1.000	.007	-.022	-.014	-.016	.011	.021	.032

$\epsilon = 3°$ $\quad \frac{2\beta y}{L(1-\epsilon\beta)} = .50$

$\frac{x}{L}$	θ = 0	15	30	45	60	75	90
.033	.114	.097	.094	.098	.108	.116	.123
.067	.099	.082	.086	.088	.093	.102	.110
.100	.077	.071	.078	.073	.079	.086	.096
.133	.062	.053	.059	.059	.061	.071	.082
.167	.049	.043	.047	.047	.051	.059	.068
.200	.042	.032	.037	.036	.040	.046	.054
.233	.041	.032	.033	.033	.035	.046	.048
.267	.034	.025	.033	.029	.029	.039	.043
.300							
.333	.016	.010	.014	.012	.014	.019	.024
.367	.016	.003	.011	.008	.007	.012	.016
.400	.001	-.005	-.002	-.004	-.006	-.002	.002
.433	.012	.015	.006	-.017	-.013	-.014	-.011
.467	.000	.008	.012	.012	.005	-.014	-.022
.500	.000	-.002	.005	.000	-.001	.002	-.010
.533	-.009	-.010	-.004	-.006	-.008	.002	-.000
.567	-.017	-.020	-.016	-.015	-.015	-.007	-.007
.600	-.019	-.023	-.018	-.020	-.019	-.018	-.016
.633	-.023	-.031	-.022	-.026	-.026	-.023	-.022
.667	-.034	-.039	-.034	-.039	-.039	-.036	-.035
.700	-.039	-.050	-.041	-.043	-.040	-.036	-.034
.733	-.040	-.050	-.050	-.054	-.055	-.050	-.046
.767	-.047	-.058	-.053	-.056	-.058	-.058	-.051
.800	-.053	-.058	-.055	-.058	-.059	-.057	-.053
.833	-.050	-.062	-.055	-.063	-.063	-.060	-.057
.867	-.051	-.061	-.056	-.061	-.063	-.061	-.057
.900	-.053	-.061	-.054	-.060	-.063	-.062	-.063
.933	-.034	-.035	-.045	-.054	-.059	-.060	-.057
.967							
1.000	.038	.002	.018	.016	.013	.003	.000

$\frac{x}{L}$	θ = 180	165	150	135	120	105	90
.033	.158	.153	.148	.134	.126	.119	.112
.067	.150	.147	.150	.135	.124	.120	.106
.100	.140	.135	.136	.122	.113	.110	.100
.133	.120	.116	.111	.102	.093	.088	.083
.167	.102	.095	.096	.086	.077	.073	.067
.200	.088	.082	.083	.071	.065	.060	.055
.233	.079	.075	.076	.065	.059	.056	.051
.267							
.300	.059	.051	.053	.045	.036	.036	.034
.333	.048	.044	.045	.034	.025	.023	.022
.367	.040	.036	.038	.025	.018	.018	.018
.400	.025	.021	.021	.013	.005	.002	.002
.433	.012	.006	.008	-.002	-.008	-.012	-.013
.467	-.004	-.004	-.005	-.016	-.022	-.024	-.022
.500	-.011	-.013	-.014	-.021	-.025	-.021	-.006
.533	-.021	-.025	-.024	-.028	-.025	-.014	-.002
.567	-.029	-.033	-.030	-.026	-.020	-.014	-.009
.600	-.035	-.035	-.030	-.025	-.025	-.018	-.014
.633	-.037	-.033	-.034	-.030	-.030	-.026	-.022
.667	-.036	-.033	-.032	-.034	-.034	-.033	-.029
.700	-.050	-.046	-.042	-.045	-.044	-.040	-.038
.733	-.045	-.046	-.041	-.044	-.045	-.038	-.040
.767	-.046	-.048	-.044	-.047	-.053	-.054	-.049
.800	-.044	-.049	-.045	-.049	-.053	-.050	-.048
.833	-.048	-.054	-.049	-.053	-.056	-.054	-.048
.867							
.900	-.057	-.060	-.058	-.062	-.059	-.057	-.056
.933	-.057	-.060	-.058	-.060	-.058	-.052	-.052
.967	-.058	-.056	-.055	-.056	-.048	-.031	-.012
1.000	-.005	-.032	-.019	-.004	.009	.016	.019

TABLE 2.- PRESSURE-COEFFICIENT DATA FOR THE BODY - Continued.

[M = 1.41]

$\epsilon = 3°$ $\frac{2\beta y}{L(1-\epsilon\beta)} = .37$

x/L	θ = 0	15	30	45	60	75	90
.033	.108	.092	.099	.099	.107	.110	.120
.067	.099	.089	.088	.091	.099	.102	.111
.100	.077	.072	.073	.078	.078	.081	.089
.133	.063	.059	.062	.063	.067	.069	.076
.167	.050	.046	.047	.045	.050	.052	.060
.200	.043	.039	.039	.037	.042	.045	.050
.233	.039	.034	.035	.030	.035	.038	.044
.267	.031	.025	.033	.029	.033	.030	.042
.300							
.333	.061	.055	.061	.058	.045	.023	.022
.367	.053	.045	.061	.058	.058	.044	.033
.400	.030	.031	.040	.038	.046	.042	.033
.433	.020	.017	.023	.017	.025	.023	.022
.467	.006	.006	.006	.003	.004	.006	.002
.500	-.006	-.005	-.003	-.008	-.001	-.004	-.003
.533	-.007	-.011	-.009	-.015	-.012	-.015	-.009
.567	-.021	-.023	-.015	-.019	-.016	-.017	-.013
.600	-.028	-.030	-.023	-.028	-.026	-.027	-.025
.633	-.038	-.042	-.029	-.032	-.030	-.030	-.026
.667	-.052	-.055	-.045	-.047	-.044	-.044	-.036
.700	-.054	-.060	-.051	-.058	-.054	-.054	-.045
.733	-.063	-.067	-.061	-.067	-.065	-.066	-.056
.767	-.068	-.073	-.066	-.073	-.072	-.071	-.066
.800	-.068	-.073	-.066	-.077	-.076	-.076	-.073
.833	-.067	-.072	-.068	-.078	-.078	-.081	-.079
.867	-.045	-.063	-.067	-.076	-.078	-.081	-.078
.900	-.066	-.069	-.057	-.061	-.076	-.082	-.083
.933	-.055	-.061	-.060	-.070	-.077	-.073	-.070
.967							
1.000	.024	-.004	.005	.006	.000	-.014	-.019

x/L	θ = 180	165	150	135	120	105	90
.033	.159	.158	.152	.137	.129	.119	.111
.067	.150	.150	.150	.134	.129	.116	.107
.100	.139	.139	.135	.124	.116	.105	.099
.133	.119	.121	.114	.102	.095	.086	.079
.167	.103	.101	.096	.088	.081	.072	.066
.200	.089	.086	.083	.073	.066	.060	.053
.233	.080	.078	.077	.067	.062	.053	.047
.267							
.300	.058	.055	.055	.048	.039	.030	.029
.333	.045	.043	.042	.031	.028	.024	.016
.367	.041	.039	.036	.027	.026	.024	.032
.400	.025	.026	.023	.016	.024	.025	.032
.433	.013	.017	.015	.012	.016	.016	.022
.467	.007	.010	.006	.004	.006	.007	.011
.500	.003	.006	.003	.000	.003	.001	.007
.533	-.006	-.006	-.009	-.008	-.005	-.008	-.004
.567	-.019	-.015	-.014	-.017	-.016	-.017	-.014
.600	-.024	-.021	-.020	-.021	-.020	-.022	-.023
.633	-.027	-.025	-.026	-.027	-.028	-.031	-.028
.667	-.031	-.033	-.032	-.034	-.033	-.032	-.029
.700	-.043	-.041	-.041	-.042	-.043	-.047	-.045
.733	-.043	-.043	-.043	-.046	-.048	-.054	-.056
.767	-.048	-.048	-.051	-.060	-.060	-.063	-.064
.800	-.049	-.055	-.052	-.058	-.061	-.066	-.064
.833	-.057	-.058	-.061	-.064	-.066	-.070	-.068
.867							
.900	-.065	-.072	-.069	-.073	-.074	-.077	-.074
.933	-.070	-.075	-.071	-.067	-.074	-.073	-.066
.967	-.071	-.075	-.067	-.063	-.054	-.038	-.018
1.000	-.017	-.050	-.028	-.009	-.007	-.006	-.003

$\epsilon = 3°$ $\frac{2\beta y}{L(1-\epsilon\beta)} = .21$

x/L	θ = 0	15	30	45	60	75	90
.033	.111	.098	.096	.100	.104	.117	.124
.067	.101	.089	.083	.089	.094	.105	.108
.100	.080	.076	.068	.077	.076	.091	.097
.133	.067	.059	.059	.063	.065	.077	.079
.167	.093	.093	.103	.049	.050	.061	.065
.200	.105	.105	.098	.088	.085	.083	.080
.233	.096	.093	.087	.088	.084	.086	.084
.267	.075	.080	.080	.083	.077	.082	.081
.300							
.333	.070	.062	.060	.069	.066	.066	.066
.367	.057	.047	.042	.059	.058	.061	.059
.400	.035	.029	.018	.036	.040	.047	.046
.433	.010	.002	-.002	.014	.015	.017	.020
.467	-.006	-.016	-.017	-.010	-.005	.003	.005
.500	-.026	-.031	-.027	-.020	-.017	-.005	-.006
.533	-.029	-.041	-.040	-.032	-.028	-.018	-.014
.567	-.046	-.056	-.057	-.044	-.039	-.029	-.022
.600	-.061	-.075	-.064	-.062	-.056	-.047	-.039
.633	-.067	-.079	-.075	-.068	-.065	-.055	-.048
.667	-.084	-.091	-.082	-.079	-.077	-.067	-.060
.700	-.082	-.096	-.087	-.088	-.087	-.079	-.073
.733	-.087	-.097	-.087	-.096	-.095	-.088	-.084
.767	-.087	-.098	-.086	-.097	-.098	-.093	-.089
.800	-.075	-.080	-.079	-.097	-.101	-.098	-.095
.833	-.082	-.088	-.075	-.083	-.097	-.100	-.099
.867	-.074	-.086	-.079	-.088	-.096	-.088	-.092
.900	-.074	-.084	-.082	-.091	-.101	-.098	-.101
.933	-.060	-.068	-.070	-.081	-.091	-.091	-.100
.967							
1.000	.024	-.032	-.022	-.018	-.025	-.028	-.036

x/L	θ = 180	165	150	135	120	105	90
.033	.161	.161	.154	.140	.127	.123	.115
.067	.153	.150	.148	.136	.124	.117	.105
.100	.142	.141	.139	.124	.112	.109	.097
.133	.125	.122	.119	.102	.094	.090	.081
.167	.108	.105	.102	.091	.081	.079	.070
.200	.091	.087	.087	.075	.067	.067	.074
.233	.085	.086	.081	.074	.079	.086	.087
.267							
.300	.075	.078	.077	.069	.069	.071	.069
.333	.070	.071	.069	.061	.057	.059	.062
.367	.062	.061	.065	.054	.050	.056	.056
.400	.046	.050	.050	.038	.037	.039	.040
.433	.032	.035	.036	.025	.023	.024	.022
.467	.021	.023	.021	.011	.009	.010	.007
.500	.012	.012	.014	.002	.002	.004	.002
.533	-.001	.001	.002	-.010	-.011	-.007	-.010
.567	-.009	-.013	-.010	-.019	-.022	-.023	-.029
.600	-.019	-.024	-.020	-.031	-.034	-.036	-.042
.633	-.024	-.030	-.027	-.038	-.041	-.041	-.046
.667	-.035	-.039	-.039	-.046	-.048	-.049	-.057
.700	-.043	-.046	-.045	-.057	-.063	-.062	-.069
.733	-.050	-.056	-.057	-.067	-.076	-.074	-.081
.767	-.061	-.065	-.071	-.079	-.083	-.085	-.089
.800	-.066	-.073	-.072	-.080	-.087	-.087	-.090
.833	-.075	-.079	-.081	-.087	-.089	-.091	-.094
.867							
.900	-.085	-.094	-.090	-.093	-.097	-.084	-.087
.933	-.087	-.092	-.087	-.089	-.091	-.085	-.078
.967	-.082	-.087	-.078	-.080	-.069	-.046	-.029
1.000	-.027	-.061	-.040	-.029	-.025	-.022	-.020

TABLE 2.- PRESSURE-COEFFICIENT DATA FOR THE BODY - Continued

[M = 1.41]

$\epsilon = -3°$ $\quad \frac{2\beta y}{L(1-\epsilon\beta)} = .94$

x/L	θ = 0	15	30	45	60	75	90
.033	.160	.153	.156	.149	.136	.128	.120
.067	.158	.146	.147	.140	.127	.124	.110
.100	.138	.127	.126	.121	.109	.098	.094
.133	.119	.110	.107	.101	.090	.088	.076
.167	.102	.092	.092	.085	.073	.069	.057
.200	.088	.078	.077	.071	.060	.055	.044
.233	.079	.070	.069	.065	.049	.048	.036
.267	.070	.061	.067	.066	.061	.053	.038
.300							
.333	.054	.048	.050	.044	.030	.028	.018
.367	.054	.040	.040	.036	.024	.020	.012
.400	.037	.024	.025	.021	.011	.008	.002
.433	.021	.011	.009	.007	-.003	-.005	-.013
.467	.005	-.007	-.006	-.011	-.013	-.014	-.028
.500	-.003	-.015	-.014	-.016	-.022	-.021	-.033
.533	-.012	-.021	-.024	-.024	-.031	-.034	-.037
.567	-.025	-.038	-.037	-.039	-.040	-.040	-.046
.600	-.032	-.044	-.046	-.044	-.048	-.047	-.056
.633	-.040	-.048	-.045	-.047	-.051	-.053	-.058
.667	-.049	-.054	-.054	-.053	-.061	-.059	-.062
.700	-.057	-.067	-.060	-.059	-.065	-.064	-.069
.733	-.062	-.066	-.064	-.061	-.070	-.065	-.070
.767	-.065	-.070	-.067	-.066	-.073	-.070	-.069
.800	-.067	-.075	-.071	-.071	-.079	-.073	-.075
.833	-.047	-.046	-.066	-.068	-.077	-.073	-.072
.867	-.047	-.043	-.031	-.038	-.045	-.044	-.061
.900	-.057	-.051	-.039	-.047	-.048	-.044	-.046
.933	-.057	-.054	-.049	-.049	-.056	-.048	-.048
.967							
1.000	.022	-.012	-.012	-.022	.031	.044	.034

x/L	θ = 180	165	150	135	120	105	90
.033	.098	.088	.091	.097	.099	.111	.115
.067	.086	.074	.082	.084	.088	.099	.100
.100	.079	.064	.074	.077	.078	.089	.093
.133	.057	.054	.058	.061	.061	.071	.076
.167	.046	.038	.047	.043	.045	.051	.060
.200	.034	.030	.034	.032	.031	.041	.045
.233	.027	.022	.029	.021	.023	.033	.037
.267							
.300	.006	.003	.006	.008	.012	.020	.023
.333	-.003	-.004	.000	.001	.002	.012	.014
.367	-.002	-.005	.002	-.002	-.003	.005	.006
.400	-.014	-.017	-.014	-.015	-.016	-.008	-.005
.433	-.024	-.024	-.021	-.024	-.025	-.018	-.018
.467	-.030	-.034	-.030	-.031	-.034	-.028	-.029
.500	-.030	-.032	-.030	-.031	-.032	-.031	-.035
.533	-.035	-.039	-.037	-.036	-.040	-.038	-.042
.567	-.043	-.046	-.044	-.045	-.047	-.045	-.047
.600	-.048	-.049	-.047	-.050	-.050	-.050	-.053
.633	-.044	-.048	-.049	-.050	-.054	-.052	-.055
.667	-.050	-.051	-.049	-.049	-.054	-.051	-.056
.700	-.054	-.061	-.059	-.059	-.067	-.069	-.071
.733	-.053	-.054	-.057	-.058	-.059	-.060	-.066
.767	-.055	-.054	-.054	-.057	-.066	-.067	-.074
.800	-.048	-.051	-.050	-.053	-.063	-.059	-.064
.833	-.047	-.046	-.047	-.049	-.061	-.061	-.066
.867							
.900	-.037	-.041	-.040	-.041	-.046	-.031	-.036
.933	-.023	-.024	-.021	-.019	-.026	-.020	-.029
.967	.005	.001	.002	-.005	-.012	-.013	-.025
1.000	.091	.070	.075	.058	.073	.069	.037

$\epsilon = -3°$ $\quad \frac{2\beta y}{L(1-\epsilon\beta)} = .45$

x/L	θ = 0	15	30	45	60	75	90
.033	.169	.179	.155	.148	.144	.133	.126
.067	.158	.160	.147	.134	.125	.118	.112
.100	.138	.143	.132	.120	.107	.101	.098
.133	.123	.120	.110	.098	.093	.088	.079
.167	.106	.108	.099	.085	.074	.071	.065
.200	.092	.093	.083	.072	.063	.056	.056
.233	.083	.086	.076	.064	.055	.051	.051
.267	.080	.077	.070	.063	.051	.049	.042
.300							
.333	.057	.056	.047	.038	.030	.026	.023
.367	.057	.057	.040	.032	.024	.019	.019
.400	.077	.105	.080	.061	.036	.008	.005
.433	.060	.079	.071	.060	.052	.044	.033
.467	.038	.058	.046	.034	.027	.019	.014
.500	.047	.046	.031	.020	.010	.004	.000
.533	.032	.034	.022	.006	.000	-.006	-.014
.567	.012	.013	.006	-.005	-.010	-.012	-.014
.600	.001	-.001	-.010	-.019	-.027	-.028	-.028
.633	-.009	-.004	-.021	-.030	-.035	-.037	-.033
.667	-.032	-.026	-.037	-.043	-.046	-.049	-.042
.700	-.044	-.041	-.045	-.057	-.056	-.056	-.051
.733	-.061	-.058	-.064	-.073	-.077	-.068	-.060
.767	-.074	-.073	-.076	-.083	-.084	-.076	-.065
.800	-.088	-.087	-.088	-.089	-.090	-.083	-.070
.833	-.095	-.096	-.097	-.097	-.099	-.089	-.074
.867	-.083	-.074	-.102	-.100	-.100	-.087	-.074
.900	-.105	-.106	-.107	-.099	-.095	-.079	-.079
.933	-.100	-.105	-.103	-.104	-.103	-.092	-.079
.967							
1.000	-.017	-.029	-.037	-.052	-.013	-.006	-.014

x/L	θ = 180	165	150	135	120	105	90
.033	.090	.098	.087	.093	.094	.108	.126
.067	.083	.090	.082	.084	.084	.097	.107
.100	.075	.080	.071	.075	.077	.088	.102
.133	.058	.067	.055	.056	.057	.073	.084
.167	.047	.053	.042	.041	.039	.054	.065
.200	.035	.042	.033	.031	.030	.046	.051
.233	.032	.036	.034	.026	.022	.038	.051
.267							.047
.300	.012	.019	.012	.009	.008	.019	.033
.333	.004	.011	.002	-.002	.001	.007	.019
.367	.003	.006	.003	-.006	-.007	.004	.014
.400	-.011	-.002	-.013	-.018	-.020	-.010	.006
.433	-.023	-.014	-.022	-.027	-.027	-.011	.014
.467	-.029	-.022	-.029	-.024	-.017	.000	.023
.500	-.022	-.014	-.018	-.012	-.009	.005	.014
.533	-.027	-.014	-.019	-.017	-.019	-.012	.000
.567	-.030	-.017	-.025	-.027	-.031	-.022	-.014
.600	-.028	-.014	-.023	-.029	-.037	-.032	-.028
.633	-.023	-.017	-.025	-.032	-.041	-.038	-.037
.667	-.025	-.018	-.027	-.034	-.041	-.038	-.037
.700	-.032	-.024	-.034	-.041	-.053	-.051	-.061
.733	-.027	-.025	-.033	-.041	-.053	-.056	-.060
.767	-.033	-.030	-.039	-.045	-.060	-.062	-.070
.800	-.031	-.029	-.038	-.046	-.060	-.060	-.065
.833	-.036	-.031	-.040	-.046	-.061	-.064	-.070
.867							
.900	-.043	-.036	-.042	-.053	-.065	-.066	-.084
.933	-.039	-.034	-.038	-.047	-.055	-.055	-.065
.967	-.028	-.022	-.021	-.022	-.020	-.009	-.019
1.000	.011	.007	.007	-.009	.004	.012	-.014

TABLE 2.- PRESSURE-COEFFICIENT DATA FOR THE BODY - Continued.

$$\left[M = 1.41\right]$$

$\epsilon = -3^\circ$ $\quad \frac{2\beta y}{L(1-\epsilon\beta)} = .81$

$\frac{x}{L}$	θ 0	15	30	45	60	75	90
.033	.159	.153	.158	.145	.139	.130	.125
.067	.157	.146	.151	.135	.130	.121	.117
.100	.135	.128	.135	.119	.107	.100	.098
.133	.118	.105	.110	.102	.092	.083	.078
.167	.099	.094	.094	.081	.074	.065	.062
.200	.090	.084	.097	.085	.074	.058	.054
.233	.081	.075	.082	.067	.060	.051	.047
.267	.070	.066	.075	.065	.057	.048	.041
.300							
.333	.056	.051	.057	.045	.033	.025	.023
.367	.051	.039	.047	.035	.025	.018	.015
.400	.032	.026	.035	.021	.012	.005	.008
.433	.017	.009	.014	.003	-.003	-.006	-.009
.467	.003	-.004	.000	-.009	-.014	-.016	-.022
.500	-.011	-.012	-.005	-.011	-.019	-.024	-.026
.533	-.016	-.022	-.019	-.027	-.031	-.039	-.040
.567	-.031	-.036	-.033	-.035	-.037	-.045	-.042
.600	-.040	-.043	-.038	-.046	-.049	-.050	-.052
.633	-.040	-.048	-.039	-.042	-.048	-.049	-.052
.667	-.056	-.055	-.046	-.050	-.058	-.059	-.061
.700	-.059	-.052	-.053	-.056	-.063	-.064	-.060
.733	-.046	-.022	-.017	-.040	-.058	-.068	-.069
.767	-.046	-.029	-.017	-.026	-.041	-.042	-.048
.800	-.048	-.036	-.025	-.032	-.043	-.044	-.041
.833	-.038	-.047	-.035	-.042	-.052	-.051	-.048
.867	-.044	-.049	-.041	-.045	-.052	-.052	-.046
.900	-.054	-.062	-.053	-.057	-.062	-.058	-.052
.933	-.059	-.066	-.054	-.057	-.058	-.053	-.047
.967							
1.000	.025	-.019	-.016	-.019	.028	.033	.025

$\frac{x}{L}$	θ 180	165	150	135	120	105	90
.033	.093	.087	.094	.097	.101	.109	.122
.067	.083	.072	.086	.083	.090	.097	.108
.100	.076	.067	.076	.076	.079	.088	.098
.133	.054	.057	.060	.060	.063	.069	.079
.167	.042	.041	.049	.042	.049	.051	.061
.200	.031	.029	.038	.031	.033	.040	.050
.233	.022	.021	.032	.025	.030	.038	.046
.267							
.300	.005	.005	.015	.012	.012	.019	.031
.333	-.003	-.004	.009	.002	.005	.007	.019
.367	-.003	-.004	.010	-.003	.002	.006	.013
.400	-.013	-.012	-.008	-.014	-.014	-.010	-.004
.433	-.023	-.025	-.017	-.024	-.024	-.020	-.015
.467	-.031	-.032	-.026	-.031	-.032	-.029	-.026
.500	-.031	-.032	-.027	-.030	-.033	-.034	-.031
.533	-.037	-.041	-.032	-.035	-.040	-.038	-.037
.567	-.041	-.045	-.040	-.043	-.047	-.045	-.045
.600	-.047	-.050	-.043	-.045	-.051	-.051	-.051
.633	-.045	-.048	-.044	-.045	-.051	-.051	-.052
.667	-.050	-.054	-.046	-.050	-.059	-.056	-.053
.700	-.055	-.061	-.055	-.057	-.064	-.065	-.063
.733	-.054	-.058	-.049	-.052	-.064	-.063	-.063
.767	-.055	-.058	-.053	-.057	-.069	-.063	-.046
.800	-.047	-.050	-.042	-.039	-.043	-.041	-.041
.833	-.038	-.035	-.031	-.029	-.038	-.035	-.041
.867							
.900	-.026	-.016	-.012	-.023	-.032	-.038	-.041
.933	-.015	-.008	-.003	-.010	-.024	-.028	-.037
.967	.007	.007	.012	.003	-.008	-.014	-.028
1.000	.084	.063	.073	.052	.068	.068	.050

$\epsilon = -3^\circ$ $\quad \frac{2\beta y}{L(1-\epsilon\beta)} = .70$

$\frac{x}{L}$	θ 0	15	30	45	60	75	90
.033	.158	.156	.155	.148	.141	.134	.125
.067	.153	.147	.146	.140	.134	.124	.114
.100	.130	.128	.131	.122	.113	.105	.097
.133	.118	.108	.107	.106	.096	.084	.077
.167	.103	.096	.094	.086	.083	.075	.066
.200	.096	.088	.085	.081	.077	.067	.057
.233	.086	.076	.074	.068	.061	.052	.041
.267	.075	.066	.072	.066	.058	.049	.041
.300							
.333	.058	.047	.051	.044	.039	.028	.021
.367	.052	.042	.045	.036	.032	.022	.018
.400	.034	.026	.030	.020	.018	.009	.004
.433	.017	.007	.009	.006	.001	-.007	-.008
.467	.002	-.007	-.005	-.007	-.004	-.015	-.017
.500	-.008	-.019	-.013	-.016	-.013	-.026	-.031
.533	-.014	-.028	-.028	-.033	-.031	-.041	-.044
.567	-.031	-.041	-.033	-.037	-.034	-.041	-.044
.600	-.004	-.001	-.041	-.042	-.041	-.045	-.047
.633	-.006	.001	.004	-.002	-.001	-.045	-.049
.667	-.014	-.006	.001	-.007	-.017	-.023	-.028
.700	-.029	-.022	-.012	-.023	-.028	-.032	-.035
.733	-.026	-.034	-.021	-.029	-.036	-.038	-.043
.767	-.029	-.036	-.033	-.042	-.045	-.049	-.048
.800	-.043	-.047	-.043	-.048	-.052	-.056	-.054
.833	-.049	-.060	-.052	-.055	-.059	-.060	-.056
.867	-.058	-.065	-.057	-.064	-.065	-.062	-.055
.900	-.071	-.081	-.071	-.076	-.070	-.068	-.058
.933	-.074	-.084	-.073	-.078	-.067	-.062	-.056
.967							
1.000	.008	-.030	-.016	-.022	.026	.027	.022

$\frac{x}{L}$	θ 180	165	150	135	120	105	90
.033	.093	.084	.091	.095	.103	.107	.118
.067	.083	.073	.082	.084	.093	.095	.105
.100	.076	.070	.074	.074	.082	.084	.097
.133	.054	.058	.059	.058	.066	.071	.080
.167	.043	.041	.047	.044	.054	.058	.065
.200	.032	.032	.037	.032	.038	.041	.049
.233	.026	.028	.030	.026	.033	.036	.040
.267							
.300	.008	.009	.015	.013	.019	.020	.025
.333	.002	.002	.005	.001	.010	.012	.017
.367	.001	.001	.008	-.001	.006	.006	.009
.400	-.012	-.012	-.009	-.014	-.007	-.007	-.002
.433	-.025	-.022	-.020	-.024	-.018	-.018	-.013
.467	-.032	-.030	-.029	-.032	-.029	-.031	-.028
.500	-.031	-.032	-.030	-.032	-.029	-.033	-.034
.533	-.036	-.040	-.035	-.038	-.038	-.041	-.042
.567	-.042	-.046	-.041	-.046	-.041	-.048	-.047
.600	-.048	-.051	-.046	-.051	-.046	-.050	-.047
.633	-.046	-.048	-.045	-.052	-.049	-.052	-.043
.667	-.050	-.053	-.050	-.051	-.045	-.045	-.027
.700	-.055	-.053	-.052	-.054	-.043	-.050	-.042
.733	-.044	-.042	-.040	-.040	-.036	-.038	-.037
.767	-.034	-.032	-.032	-.034	-.039	-.047	-.051
.800	-.032	-.022	-.022	-.034	-.036	-.043	-.046
.833	-.019	-.019	-.019	-.030	-.033	-.045	-.050
.867							
.900	-.016	-.014	-.015	-.025	-.031	-.042	-.051
.933	-.011	-.011	-.010	-.018	-.012	-.038	-.043
.967	.004	-.003	.003	-.003	-.003	-.014	-.023
1.000	.067	.047	.054	.038	.059	.056	.039

TABLE 2.- PRESSURE-COEFFICIENT DATA FOR THE BODY - Continued

$$\left[M = 1.41\right]$$

$\epsilon = -3^\circ$ $\quad \frac{2\beta y}{L(1-\epsilon\beta)} = .39$

$\frac{x}{L}$	θ						
	0	15	30	45	60	75	90
.033	.167	.166	.154	.141	.142	.132	.121
.067	.162	.160	.145	.136	.128	.120	.112
.100	.141	.141	.129	.120	.109	.103	.093
.133	.129	.124	.111	.102	.092	.085	.079
.167	.112	.104	.093	.085	.075	.070	.060
.200	.099	.092	.084	.074	.068	.060	.056
.233	.090	.082	.077	.063	.055	.051	.047
.267	.082	.077	.072	.059	.051	.048	.042
.300							
.333	.115	.135	.077	.060	.043	.027	.019
.367	.108	.123	.110	.095	.081	.059	.042
.400	.098	.100	.087	.075	.067	.061	.051
.433	.080	.081	.067	.052	.041	.034	.028
.467	.059	.059	.047	.027	.020	.010	.005
.500	.042	.043	.030	.017	.007	.005	-.005
.533	.033	.037	.015	-.001	-.011	-.012	-.014
.567	.009	.012	.009	-.007	-.007	-.017	-.019
.600	-.007	-.007	-.010	-.023	-.028	-.029	-.028
.633	-.023	-.028	-.027	-.037	-.041	-.038	-.037
.667	-.049	-.050	-.049	-.055	-.058	-.052	-.051
.700	-.061	-.063	-.061	-.067	-.073	-.071	-.060
.733	-.077	-.077	-.080	-.084	-.087	-.084	-.074
.767	-.090	-.093	-.089	-.091	-.094	-.088	-.079
.800	-.106	-.106	-.102	-.099	-.102	-.093	-.084
.833	-.096	-.096	-.109	-.110	-.110	-.098	-.088
.867	-.109	-.113	-.108	-.102	-.098	-.100	-.088
.900	-.120	-.120	-.114	-.115	-.114	-.104	-.093
.933	-.121	-.125	-.122	-.117	-.113	-.100	-.088
.967							
1.000	-.021	-.022	-.036	-.057	-.016	-.013	-.023

$\frac{x}{L}$	θ						
	180	165	150	135	120	105	90
.033	.097	.097	.092	.095	.097	.106	.121
.067	.088	.086	.083	.085	.088	.098	.107
.100	.079	.082	.072	.075	.076	.087	.102
.133	.059	.066	.059	.059	.059	.070	.079
.167	.047	.054	.047	.043	.042	.055	.065
.200	.036	.043	.035	.034	.031	.042	.051
.233	.033	.040	.034	.029	.027	.037	.047
.267							
.300	.014	.020	.012	.013	.008	.018	.028
.333	.007	.011	.007	.003	-.001	.009	.019
.367	.003	.008	.006	.000	.005	.016	.037
.400	-.006	-.001	-.010	-.004	.005	.022	.037
.433	-.008	.001	-.008	.001	.005	.018	.028
.467	-.009	.003	-.010	.004	-.009	.002	.009
.500	-.002	.004	-.005	-.008	-.012	-.003	.005
.533	-.008	.000	-.010	-.012	-.022	-.010	-.009
.567	-.015	-.009	-.020	-.022	-.027	-.025	-.023
.600	-.014	-.014	-.021	-.025	-.033	-.030	-.033
.633	-.014	-.012	-.023	-.028	-.038	-.036	-.037
.667	-.020	-.016	-.027	-.028	-.040	-.041	-.047
.700	-.026	-.021	-.033	-.041	-.056	-.056	-.060
.733	-.028	-.027	-.036	-.046	-.060	-.064	-.074
.767	-.038	-.033	-.045	-.051	-.067	-.071	-.084
.800	-.039	-.037	-.044	-.051	-.066	-.069	-.079
.833	-.044	-.040	-.048	-.053	-.068	-.072	-.084
.867							
.900	-.053	-.047	-.051	-.061	-.076	-.067	-.079
.933	-.049	-.042	-.048	-.058	-.068	-.063	-.074
.967	-.043	-.035	-.032	-.031	-.029	-.021	-.033
1.000	.001	.004	-.002	-.016	-.005	.004	-.023

$\epsilon = -3^\circ$ $\quad \frac{2\beta y}{L(1-\epsilon\beta)} = .57$

$\frac{x}{L}$	θ						
	0	15	30	45	60	75	90
.033	.153	.164	.151	.140	.135	.134	.116
.067	.152	.155	.147	.138	.126	.126	.111
.100	.138	.140	.130	.118	.112	.114	.101
.133	.122	.124	.108	.099	.087	.089	.075
.167	.103	.108	.096	.086	.077	.078	.066
.200	.094	.096	.086	.071	.067	.066	.051
.233	.082	.087	.075	.063	.059	.058	.044
.267	.078	.079	.070	.061	.053	.054	.038
.300							
.333	.054	.058	.046	.039	.032	.029	.018
.367	.050	.049	.042	.033	.024	.024	.013
.400	.033	.032	.023	.017	.009	.011	.003
.433	.013	.015	.007	-.002	-.001	.000	-.009
.467	-.003	-.002	-.007	-.013	-.011	-.013	-.025
.500	.054	.051	.021	-.009	-.027	-.025	-.035
.533	.027	.034	.023	.012	.007	.007	-.030
.567	.012	.016	.012	.004	-.002	-.001	-.012
.600	.008	.013	.005	-.002	-.009	-.006	-.018
.633	-.001	.005	-.002	-.009	-.018	-.017	-.024
.667	-.023	-.014	-.017	-.026	-.035	-.032	-.040
.700	-.036	-.029	-.030	-.034	-.040	-.035	-.043
.733	-.046	-.039	-.045	-.050	-.058	-.054	-.058
.767	-.059	-.052	-.053	-.061	-.068	-.061	-.060
.800	-.075	-.064	-.067	-.070	-.073	-.060	-.060
.833	-.083	-.075	-.078	-.079	-.082	-.068	-.066
.867	-.083	-.078	-.082	-.085	-.085	-.072	-.068
.900	-.093	-.081	-.086	-.084	-.082	-.072	-.074
.933	-.086	-.068	-.057	-.074	-.079	-.066	-.062
.967							
1.000	-.010	-.026	-.022	-.030	.012	.023	.006

$\frac{x}{L}$	θ						
	180	165	150	135	120	105	90
.033	.089	.095	.089	.091	.096	.111	.118
.067	.080	.085	.080	.081	.082	.098	.102
.100	.071	.079	.073	.074	.081	.099	.105
.133	.054	.067	.057	.059	.062	.074	.080
.167	.040	.051	.044	.043	.044	.057	.062
.200	.031	.041	.035	.032	.034	.046	.049
.233	.025	.036	.033	.027	.025	.040	.043
.267							
.300	.009	.019	.012	.012	.010	.025	.027
.333	.000	.011	.006	.002	.002	.011	.017
.367	-.002	.008	.007	-.002	-.004	.008	.009
.400	-.013	-.004	-.012	-.017	-.015	-.006	-.004
.433	-.025	-.014	-.023	-.024	-.027	-.018	-.016
.467	-.034	-.023	-.030	-.035	-.037	-.029	-.028
.500	-.035	-.028	-.031	-.034	-.036	-.031	-.033
.533	-.040	-.031	-.035	-.040	-.044	-.036	-.027
.567	-.050	-.041	-.045	-.043	-.035	-.022	-.010
.600	-.046	-.037	-.039	-.036	-.030	-.012	-.010
.633	-.035	-.027	-.031	-.034	-.034	-.025	-.025
.667	-.027	-.018	-.028	-.034	-.039	-.033	-.032
.700	-.037	-.028	-.036	-.042	-.047	-.043	-.046
.733	-.026	-.018	-.025	-.032	-.042	-.042	-.050
.767	-.027	-.020	-.027	-.040	-.051	-.050	-.060
.800	-.026	-.018	-.023	-.034	-.046	-.048	-.058
.833	-.026	-.023	-.027	-.033	-.047	-.044	-.058
.867							
.900	-.030	-.024	-.031	-.037	-.048	-.051	-.065
.933	-.027	-.020	-.027	-.033	-.039	-.041	-.057
.967	-.008	-.004	-.007	-.005	.001	.006	-.007
1.000	.037	.036	.035	.021	.037	.041	.019

TABLE 2.- PRESSURE-COEFFICIENT DATA FOR THE BODY - Continued

[M = 2.01]

$\epsilon = 0°$ $\quad \frac{2\beta y}{L(1-\epsilon\beta)} = 3.80$

X/L	θ = 0	15	30	45	60	75	90
.033	.117	.121	.121	.115	.114	.117	.119
.067	.110	.117	.118	.111	.111	.112	.115
.100	.095	.099	.102	.099	.096	.098	.099
.133	.084	.093	.093	.087	.087	.088	.090
.167	.075	.080	.080	.075	.076	.074	.078
.200	.065	.068	.069	.063	.061	.063	.067
.233	.059	.063	.063	.056	.054	.055	.059
.267	.039	.045	.045	.040	.037	.036	.041
.300							
.333	.031	.037	.037	.032	.029	.028	.031
.367	.027	.030	.031	.024	.019	.022	.026
.400	.015	.020	.020	.014	.009	.010	.016
.433	.003	.006	.005	.000	-.003	-.003	.001
.467	-.007	-.004	-.004	-.009	-.014	-.010	-.009
.500	-.014	-.009	-.011	-.016	-.022	-.020	-.014
.533	-.003	-.018	-.020	-.022	-.023	-.028	-.015
.567	-.024	-.022	-.024	-.025	-.030	-.028	-.023
.600	-.031	-.029	-.028	-.032	-.039	-.034	-.031
.633	-.030	-.034	-.029	-.032	-.041	-.034	-.032
.667	-.040	-.039	-.036	-.041	-.046	-.045	-.041
.700	-.048	-.047	-.045	-.048	-.055	-.053	-.052
.733	-.054	-.048	-.050	-.053	-.061	-.062	-.057
.767	-.056	-.052	-.051	-.057	-.063	-.061	-.058
.800	-.060	-.055	-.054	-.060	-.063	-.063	-.059
.833	-.061	-.057	-.059	-.061	-.067	-.065	-.061
.867	-.057	-.054	-.056	-.059	-.066	-.064	-.060
.900	-.065	-.068	-.063	-.069	-.072	-.070	-.066
.933	-.067	-.067	-.057	-.069	-.060	-.058	-.060
.967							
1.000	-.092	-.093	-.040	-.096	-.047	-.047	-.046

X/L	θ = 180	165	150	135	120	105	90
.033	.118	.117	.121	.116	.114	.114	.117
.067	.112	.110	.116	.111	.107	.107	.111
.100	.102	.105	.108	.103	.100	.101	.101
.133	.097	.096	.100	.093	.091	.092	.094
.167	.087	.083	.086	.082	.081	.079	.084
.200	.072	.066	.070	.064	.062	.063	.067
.233	.063	.060	.063	.056	.054	.056	.059
.267							
.300	.042	.041	.045	.042	.037	.039	.043
.333	.030	.030	.036	.030	.028	.030	.032
.367	.026	.025	.031	.024	.021	.023	.027
.400	.015	.013	.018	.013	.012	.011	.016
.433	.007	.002	.009	.003	.002	.000	.006
.467	-.004	-.007	-.002	-.008	-.009	-.010	-.004
.500	-.012	-.013	-.008	-.013	-.017	-.017	-.010
.533	-.019	-.021	-.015	-.021	-.022	-.024	-.017
.567	-.024	-.025	-.022	-.026	-.032	-.029	-.024
.600	-.031	-.032	-.029	-.032	-.040	-.036	-.031
.633	-.036	-.034	-.039	-.035	-.041	-.040	-.034
.667	-.040	-.041	-.036	-.041	-.048	-.045	-.040
.700	-.046	-.045	-.054	-.043	-.048	-.047	-.045
.733	-.052	-.051	-.051	-.050	-.057	-.055	-.052
.767	-.054	-.057	-.054	-.057	-.063	-.060	-.057
.800	-.059	-.057	-.057	-.057	-.064	-.060	-.057
.833	-.064	-.061	-.058	-.061	-.068	-.064	-.060
.867							
.900	-.068	-.065	-.061	-.067	-.069	-.066	-.065
.933	-.065	-.064	-.052	-.065	-.061	-.057	-.056
.967	-.067	-.063	-.044	-.066	-.049	-.045	-.048
1.000	-.082	-.084	-.038	-.080	-.045	-.040	-.043

$\epsilon = 0°$ $\quad \frac{2\beta y}{L(1-\epsilon\beta)} = .98$

X/L	θ = 0	15	30	45	60	75	90
.033	.117	.126	.112	.116	.113	.116	.122
.067	.111	.124	.109	.113	.112	.115	.118
.100	.095	.107	.091	.097	.095	.097	.102
.133	.082	.095	.083	.086	.084	.087	.089
.167	.071	.082	.070	.072	.071	.074	.078
.200	.059	.071	.057	.061	.059	.062	.065
.233	.052	.067	.055	.054	.051	.055	.057
.267	.036	.050	.038	.042	.038	.039	.041
.300							
.333	.031	.040	.028	.029	.027	.029	.033
.367	.025	.037	.021	.022	.020	.023	.025
.400	.014	.023	.010	.012	.006	.012	.015
.433	.003	.012	-.002	-.001	-.003	.002	.001
.467	-.009	-.001	-.013	-.012	-.012	-.007	-.008
.500	-.016	-.005	-.022	-.019	-.021	-.017	-.015
.533	-.005	-.015	-.027	-.020	-.027	-.018	-.015
.567	-.027	-.019	-.033	-.029	-.031	-.028	-.027
.600	-.033	-.024	-.038	-.037	-.040	-.033	-.032
.633	-.037	-.026	-.043	-.039	-.042	-.034	-.037
.667	-.044	-.033	-.045	-.046	-.048	-.045	-.042
.700	-.053	-.038	-.052	-.052	-.056	-.049	-.050
.733	-.054	-.043	-.056	-.057	-.061	-.055	-.054
.767	-.060	-.046	-.060	-.061	-.062	-.056	-.057
.800	-.061	-.050	-.062	-.061	-.063	-.059	-.058
.833	-.065	-.053	-.063	-.066	-.067	-.061	-.061
.867	-.024	-.014	-.043	-.062	-.055	-.053	-.058
.900	-.038	-.028	-.046	-.040	-.058	-.063	-.068
.933	-.043	-.033	-.047	-.046	-.060	-.049	-.057
.967							
1.000	-.079	-.070	-.063	-.079	-.067	-.073	-.073

X/L	θ = 180	165	150	135	120	105	90
.033	.113	.120	.110	.110	.109	.113	.115
.067	.108	.117	.105	.106	.104	.109	.108
.100	.100	.108	.096	.098	.096	.101	.101
.133	.093	.098	.087	.089	.087	.090	.089
.167	.079	.083	.075	.077	.076	.079	.076
.200	.062	.067	.057	.059	.057	.060	.062
.233	.055	.059	.049	.051	.050	.052	.053
.267							
.300	.036	.041	.033	.035	.034	.035	.041
.333	.024	.033	.022	.021	.026	.028	.025
.367	.020	.026	.016	.020	.020	.020	.022
.400	.010	.015	.006	.009	.009	.010	.011
.433	.002	.006	-.001	-.001	-.001	.002	.002
.467	-.007	-.004	-.010	-.012	-.010	-.006	-.006
.500	-.015	-.010	-.019	-.017	-.016	-.013	-.012
.533	-.021	-.018	-.026	-.026	-.023	-.020	-.019
.567	-.027	-.020	-.031	-.027	-.026	-.027	-.024
.600	-.033	-.026	-.037	-.034	-.034	-.034	-.032
.633	-.037	-.028	-.038	-.037	-.035	-.036	-.033
.667	-.041	-.033	-.042	-.041	-.041	-.041	-.040
.700	-.046	-.038	-.050	-.045	-.044	-.043	-.042
.733	-.050	-.045	-.054	-.052	-.051	-.049	-.048
.767	-.056	-.051	-.059	-.058	-.058	-.056	-.055
.800	-.057	-.049	-.059	-.058	-.057	-.056	-.055
.833	-.063	-.054	-.063	-.062	-.060	-.059	-.057
.867							
.900	-.065	-.058	-.065	-.066	-.064	-.061	-.061
.933	-.062	-.057	-.059	-.063	-.056	-.057	-.045
.967	-.063	-.053	-.056	-.060	-.055	-.048	-.040
1.000	-.071	-.068	-.052	-.068	-.058	-.062	-.059

TABLE 2.- PRESSURE-COEFFICIENT DATA FOR THE BODY - Continued

[M = 2.01]

$\epsilon = 0°$ $\quad \frac{2\beta y}{L(1-\epsilon\beta)} = .86$

x/L	θ = 0	15	30	45	60	75	90
.033	.116	.121	.114	.119	.115	.117	.119
.067	.108	.116	.108	.111	.111	.107	.113
.100	.091	.098	.090	.093	.090	.094	.097
.133	.083	.090	.082	.091	.086	.087	.089
.167	.073	.079	.071	.073	.068	.071	.073
.200	.063	.070	.069	.071	.062	.061	.063
.233	.055	.061	.054	.056	.056	.060	.060
.267	.036	.046	.037	.038	.036	.036	.041
.300							
.333	.032	.039	.026	.027	.027	.028	.030
.367	.025	.031	.020	.022	.020	.020	.024
.400	.014	.018	.009	.014	.008	.010	.012
.433	.000	.006	-.004	.000	-.003	-.001	.000
.467	-.011	-.003	-.010	-.010	-.012	-.012	-.010
.500	-.017	-.012	-.019	-.018	-.020	-.018	-.017
.533	-.006	-.014	-.024	-.023	-.029	-.018	-.019
.567	-.029	-.022	-.029	-.028	-.032	-.029	-.029
.600	-.035	-.026	-.035	-.036	-.040	-.036	-.035
.633	-.036	-.027	-.035	-.037	-.043	-.035	-.034
.667	-.045	-.036	-.044	-.043	-.045	-.043	-.044
.700	-.052	-.043	-.049	-.049	-.055	-.050	-.052
.733	-.022	-.011	-.044	-.053	-.057	-.055	-.053
.767	-.023	-.013	-.033	-.030	-.050	-.058	-.058
.800	-.027	-.018	-.027	-.025	-.047	-.046	-.057
.833	-.035	-.024	-.034	-.031	-.047	-.043	-.049
.867	-.029	-.023	-.034	-.031	-.037	-.033	-.038
.900	-.045	-.039	-.049	-.046	-.050	-.048	-.049
.933	-.053	-.043	-.057	-.051	-.058	-.050	-.052
.967							
1.000	-.089	-.080	-.074	-.086	-.078	-.082	-.077

x/L	θ = 180	165	150	135	120	105	90
.033	.111	.118	.110	.110	.109	.111	.114
.067	.103	.113	.105	.106	.105	.105	.106
.100	.099	.105	.098	.098	.093	.095	.098
.133	.089	.096	.086	.087	.085	.087	.088
.167	.080	.084	.074	.075	.071	.074	.075
.200	.061	.065	.057	.059	.056	.059	.061
.233	.055	.059	.049	.052	.050	.051	.057
.267							
.300	.036	.043	.034	.035	.033	.035	.038
.333	.025	.029	.023	.024	.021	.024	.027
.367	.019	.025	.017	.018	.018	.018	.022
.400	.009	.015	.007	.009	.007	.007	.012
.433	.001	.007	-.001	.001	-.003	-.001	.002
.467	-.009	-.002	-.010	-.008	-.012	-.011	-.006
.500	-.017	-.009	-.016	-.014	-.017	-.016	-.013
.533	-.023	-.017	-.025	-.021	-.024	-.023	-.019
.567	-.028	-.020	-.029	-.027	-.026	-.028	-.025
.600	-.034	-.025	-.035	-.034	-.032	-.034	-.031
.633	-.038	-.027	-.036	-.034	-.034	-.037	-.034
.667	-.042	-.032	-.041	-.039	-.040	-.041	-.038
.700	-.047	-.036	-.047	-.043	-.041	-.044	-.043
.733	-.054	-.043	-.052	-.049	-.047	-.049	-.048
.767	-.060	-.048	-.058	-.056	-.055	-.055	-.054
.800	-.060	-.048	-.056	-.056	-.052	-.056	-.052
.833	-.066	-.051	-.059	-.059	-.052	-.052	-.038
.867							
.900	-.069	-.050	-.056	-.052	-.052	-.044	-.042
.933	-.060	-.047	-.051	-.045	-.051	-.043	-.042
.967	-.053	-.045	-.052	-.044	-.055	-.044	-.044
1.000	-.067	-.070	-.060	-.060	-.065	-.064	-.063

$\epsilon = 0°$ $\quad \frac{2\beta y}{L(1-\epsilon\beta)} = .73$

x/L	θ = 0	15	30	45	60	75	90
.033	.112	.120	.116	.114	.118	.117	.118
.067	.103	.112	.108	.107	.110	.110	.111
.100	.093	.101	.098	.096	.096	.099	.099
.133	.087	.093	.092	.089	.091	.090	.092
.167	.072	.082	.078	.076	.081	.082	.079
.200	.062	.069	.065	.061	.062	.062	.063
.233	.054	.063	.057	.055	.056	.056	.058
.267	.036	.046	.041	.039	.039	.038	.040
.300							
.333	.028	.035	.031	.029	.030	.029	.029
.367	.021	.033	.023	.022	.022	.019	.024
.400	.010	.021	.012	.013	.012	.011	.014
.433	-.001	.007	-.002	-.002	-.002	-.002	.001
.467	-.007	-.003	-.008	-.014	-.011	-.012	-.011
.500	-.018	-.010	-.015	-.020	-.019	-.016	-.017
.533	-.009	-.015	-.024	-.019	-.026	-.018	-.018
.567	-.030	-.019	-.026	-.027	-.028	-.030	-.026
.600	-.026	-.025	-.027	-.036	-.037	-.035	-.035
.633	.005	.021	-.003	-.018	-.028	-.033	-.036
.667	-.002	.007	.001	-.009	-.025	-.032	-.042
.700	-.017	-.008	-.013	-.012	-.026	-.032	-.041
.733	-.022	-.013	-.022	-.023	-.024	-.033	-.041
.767	-.027	-.022	-.029	-.029	-.031	-.032	-.039
.800	-.036	-.029	-.037	-.034	-.035	-.034	-.036
.833	-.045	-.035	-.044	-.044	-.042	-.040	-.041
.867	-.046	-.039	-.047	-.045	-.044	-.040	-.037
.900	-.063	-.055	-.064	-.061	-.059	-.056	-.052
.933	-.068	-.060	-.068	-.068	-.063	-.058	-.052
.967							
1.000	-.100	-.093	-.099	-.099	-.090	-.091	-.087

x/L	θ = 180	165	150	135	120	105	90
.033	.111	.116	.111	.111	.112	.110	.112
.067	.100	.113	.105	.104	.103	.106	.104
.100	.095	.105	.096	.095	.096	.096	.097
.133	.088	.094	.087	.085	.088	.086	.086
.167	.080	.083	.076	.074	.072	.076	.080
.200	.059	.067	.060	.060	.060	.059	.061
.233	.052	.058	.053	.052	.052	.053	.055
.267							
.300	.036	.043	.036	.035	.035	.034	.037
.333	.024	.034	.026	.026	.025	.022	.028
.367	.019	.027	.021	.019	.019	.018	.021
.400	.009	.015	.009	.009	.009	.007	.010
.433	.000	.005	.000	-.001	.000	-.001	.001
.467	-.006	-.004	-.009	-.010	-.008	-.010	-.009
.500	-.014	-.009	-.015	-.015	-.014	-.016	-.015
.533	-.020	-.017	-.020	-.022	-.021	-.022	-.022
.567	-.026	-.022	-.025	-.027	-.027	-.027	-.023
.600	-.034	-.030	-.033	-.034	-.032	-.033	-.031
.633	-.038	-.030	-.034	-.036	-.035	-.035	-.030
.667	-.039	-.036	-.039	-.039	-.039	-.041	-.036
.700	-.047	-.039	-.043	-.042	-.040	-.042	-.037
.733	-.053	-.045	-.047	-.050	-.041	-.040	-.032
.767	-.057	-.048	-.048	-.050	-.043	-.035	-.032
.800	-.058	-.048	-.047	-.045	-.045	-.037	-.033
.833	-.059	-.046	-.047	-.043	-.048	-.037	-.035
.867							
.900	-.053	-.042	-.050	-.045	-.052	-.045	-.046
.933	-.044	-.037	-.047	-.042	-.046	-.047	-.048
.967	-.043	-.034	-.051	-.043	-.047	-.049	-.050
.000	-.064	-.064	-.075	-.063	-.064	-.068	-.072

TABLE 2.- PRESSURE-COEFFICIENT DATA FOR THE BODY - Continued

$$\left[M = 2.01\right]$$

$\epsilon = 0°$ $\quad \frac{2\beta y}{L(1-\epsilon\beta)} = .60$

x/L	θ = 0	15	30	45	60	75	90
.033	.110	.120	.112	.113	.112	.118	.115
.067	.103	.115	.106	.106	.108	.114	.111
.100	.095	.115	.102	.105	.104	.113	.104
.133	.086	.099	.087	.086	.088	.095	.091
.167	.073	.086	.075	.075	.074	.082	.077
.200	.062	.074	.064	.062	.061	.067	.062
.233	.053	.068	.057	.056	.054	.062	.057
.267	.038	.048	.040	.039	.037	.043	.040
.300							
.333	.023	.040	.029	.028	.027	.032	.030
.367	.024	.036	.022	.021	.021	.027	.024
.400	.011	.025	.013	.010	.009	.014	.014
.433	.004	.011	-.001	-.001	-.003	.002	.001
.467	-.007	.000	-.010	-.012	-.014	-.007	-.011
.500	.026	-.006	-.009	-.013	-.019	-.014	-.018
.533	.037	.029	.014	.000	-.007	-.008	-.018
.567	.009	.030	.019	.012	-.007	-.008	-.021
.600	.008	.024	.013	.009	.000	-.010	-.020
.633	-.001	.016	.003	.000	.000	-.005	-.018
.667	-.011	.001	-.011	-.012	-.014	-.007	-.019
.700	-.024	-.012	-.024	-.028	-.029	-.019	-.023
.733	-.035	-.023	-.035	-.037	-.040	-.029	-.034
.767	-.044	-.032	-.044	-.045	-.046	-.034	-.038
.800	-.056	-.040	-.052	-.051	-.051	-.043	-.042
.833	-.060	-.048	-.061	-.058	-.059	-.048	-.050
.867	-.064	-.049	-.064	-.061	-.062	-.049	-.050
.900	-.075	-.066	-.080	-.076	-.078	-.066	-.065
.933	-.063	-.060	-.080	-.073	-.081	-.069	-.069
.967							
1.000	-.102	-.092	-.108	-.103	-.103	-.090	-.091

x/L	θ = 180	165	150	135	120	105	90
.033	.112	.121	.107	.109	.106	.111	.109
.067	.103	.116	.101	.102	.101	.105	.102
.100	.097	.108	.094	.096	.094	.100	.097
.133	.091	.098	.086	.090	.089	.094	.088
.167	.082	.088	.075	.076	.073	.082	.076
.200	.064	.072	.059	.060	.057	.062	.060
.233	.055	.064	.050	.051	.049	.056	.052
.267							
.300	.039	.048	.033	.035	.033	.039	.038
.333	.028	.036	.023	.025	.023	.026	.026
.367	.021	.030	.017	.021	.018	.022	.020
.400	.011	.019	.007	.008	.006	.012	.009
.433	.001	.010	-.003	.000	-.003	.003	.001
.467	-.008	.001	-.012	-.011	-.013	-.007	-.010
.500	-.015	-.005	-.018	-.017	-.019	-.014	-.016
.533	-.021	-.010	-.026	-.023	-.026	-.019	-.021
.567	-.025	-.020	-.028	-.025	-.027	-.021	-.017
.600	-.035	-.028	-.033	-.032	-.029	-.020	-.011
.633	-.035	-.029	-.033	-.033	-.027	-.014	-.009
.667	-.038	-.033	-.037	-.033	-.030	-.013	-.007
.700	-.045	-.036	-.039	-.036	-.034	-.024	-.025
.733	-.045	-.038	-.043	-.035	-.036	-.024	-.026
.767	-.046	-.038	-.044	-.036	-.040	-.028	-.034
.800	-.042	-.037	-.045	-.037	-.040	-.031	-.037
.833	-.043	-.036	-.047	-.040	-.043	-.038	-.045
.867							
.900	-.041	-.034	-.049	-.048	-.050	-.050	-.058
.933	-.038	-.031	-.047	-.048	-.053	-.049	-.059
.967	-.040	-.031	-.046	-.050	-.056	-.051	-.059
1.000	-.064	-.054	-.064	-.069	-.073	-.067	-.077

$\epsilon = 0°$ $\quad \frac{2\beta y}{L(1-\epsilon\beta)} = .48$

x/L	θ = 0	15	30	45	60	75	90
.033	.113	.118	.113	.115	.111	.118	.116
.067	.100	.111	.110	.112	.111	.114	.116
.100	.091	.102	.101	.096	.097	.102	.101
.133	.084	.094	.087	.089	.088	.090	.089
.167	.071	.082	.077	.076	.074	.079	.078
.200	.059	.069	.065	.065	.062	.069	.065
.233	.050	.065	.058	.057	.053	.058	.056
.267	.035	.044	.038	.038	.035	.038	.039
.300							
.333	.025	.041	.029	.030	.025	.033	.031
.367	.020	.034	.023	.023	.020	.027	.024
.400	.071	.094	.045	.027	.009	.016	.012
.433	.063	.073	.064	.048	.020	.017	.002
.467	.043	.058	.047	.043	.022	.017	.005
.500	.032	.045	.033	.034	.026	.017	.005
.533	.035	.027	.019	.016	.009	.024	.001
.567	.005	.017	.010	.010	.002	.008	.005
.600	-.010	.003	-.005	-.004	-.010	.001	-.001
.633	-.015	-.009	-.013	-.013	-.016	-.009	-.008
.667	-.021	-.010	-.022	-.028	-.029	-.020	-.022
.700	-.037	-.028	-.028	-.028	-.037	-.031	-.033
.733	-.053	-.045	-.044	-.044	-.040	-.033	-.040
.767	-.064	-.053	-.057	-.057	-.055	-.040	-.044
.800	-.075	-.065	-.067	-.069	-.062	-.049	-.046
.833	-.080	-.073	-.074	-.075	-.069	-.056	-.055
.867	-.085	-.074	-.077	-.074	-.070	-.056	-.053
.900	-.098	-.087	-.086	-.037	-.088	-.073	-.069
.933	-.095	-.092	-.093	-.094	-.086	-.079	-.070
.967							
1.000	-.117	-.109	-.118	-.115	-.116	-.105	-.103

x/L	θ = 180	165	150	135	120	105	90
.033	.106	.114	.108	.108	.106	.112	.111
.067	.100	.107	.102	.108	.103	.107	.106
.100	.099	.101	.097	.099	.094	.099	.100
.133	.089	.093	.087	.089	.086	.091	.089
.167	.080	.082	.077	.078	.071	.081	.077
.200	.063	.064	.060	.060	.056	.062	.062
.233	.055	.058	.053	.053	.050	.056	.054
.267							
.300	.036	.041	.034	.036	.032	.040	.037
.333	.027	.031	.024	.025	.019	.027	.027
.367	.020	.024	.019	.020	.016	.023	.021
.400	.009	.013	.008	.009	.004	.011	.011
.433	-.002	.004	.000	.000	-.004	.003	.002
.467	-.009	-.006	-.010	-.009	-.012	-.002	.006
.500	-.017	-.010	-.016	-.014	-.013	.003	.007
.533	-.021	-.019	-.021	-.016	-.013	.000	.007
.567	-.027	-.020	-.018	-.019	-.016	.000	.014
.600	-.032	-.023	-.020	-.023	-.018	.000	.004
.633	-.031	-.021	-.021	-.022	-.018	-.007	-.003
.667	-.030	-.022	-.026	-.023	-.021	-.014	-.011
.700	-.038	-.027	-.030	-.033	-.033	-.024	-.021
.733	-.037	-.025	-.032	-.035	-.037	-.032	-.030
.767	-.040	-.027	-.034	-.041	-.043	-.037	-.034
.800	-.039	-.027	-.034	-.041	-.042	-.037	-.038
.833	-.043	-.031	-.036	-.044	-.047	-.044	-.049
.867							
.900	-.047	-.037	-.041	-.053	-.058	-.057	-.062
.933	-.047	-.040	-.044	-.055	-.061	-.058	-.064
.967	-.052	-.042	-.047	-.059	-.064	-.062	-.067
1.000	-.076	-.066	-.068	-.080	-.084	-.081	-.085

TABLE 2.- PRESSURE-COEFFICIENT DATA FOR THE BODY - Continued

$$\left[M = 2.01\right]$$

$\epsilon = 0°$ $\qquad \frac{2\beta y}{L(1-\epsilon\beta)} = .35$

$\frac{x}{L}$	θ						
	0	15	30	45	60	75	90
.033	.112	.119	.116	.116	.116	.117	.115
.067	.110	.116	.110	.112	.114	.116	.113
.100	.096	.104	.101	.101	.100	.100	.099
.133	.086	.097	.091	.091	.091	.093	.088
.167	.074	.081	.078	.077	.078	.079	.075
.200	.064	.069	.065	.064	.064	.064	.064
.233	.054	.063	.056	.058	.056	.057	.055
.267	.033	.045	.039	.038	.037	.037	.036
.300							
.333	.115	.119	.108	.097	.069	.056	.041
.367	.104	.101	.095	.089	.084	.056	.041
.400	.078	.082	.074	.068	.065	.059	.037
.433	.062	.061	.054	.049	.046	.044	.041
.467	.036	.076	.048	.037	.033	.025	.023
.500	.048	.052	.044	.041	.030	.017	.013
.533	.039	.012	.013	.023	.015	.023	.012
.567	.005	.005	.006	.003	.002	.005	.003
.600	-.018	-.012	-.016	-.017	-.015	-.009	-.007
.633	-.034	-.026	-.024	-.028	-.028	-.020	-.017
.667	-.047	-.049	-.044	-.042	-.041	-.033	-.031
.700	-.065	-.063	-.061	-.059	-.055	-.045	-.043
.733	-.081	-.083	-.077	-.072	-.067	-.056	-.052
.767	-.091	-.091	-.087	-.085	-.079	-.063	-.060
.800	-.101	-.098	-.098	-.095	-.088	-.072	-.067
.833	-.095	-.097	-.092	-.098	-.093	-.078	-.071
.867	-.102	-.098	-.096	-.097	-.086	-.076	-.070
.900	-.116	-.109	-.111	-.111	-.105	-.091	-.084
.933	-.116	-.108	-.110	-.114	-.108	-.095	-.090
.967							
1.000	-.128	-.119	-.125	-.128	-.131	-.121	-.121

$\frac{x}{L}$	θ						
	180	165	150	135	120	105	90
.033	.111	.116	.111	.109	.107	.110	.110
.067	.102	.110	.105	.103	.103	.105	.104
.100	.096	.106	.099	.096	.095	.100	.098
.133	.088	.096	.090	.087	.087	.090	.089
.167	.079	.085	.078	.076	.073	.079	.075
.200	.063	.066	.060	.061	.057	.062	.062
.233	.055	.061	.056	.051	.052	.055	.053
.267							
.300	.038	.041	.035	.034	.034	.037	.035
.333	.027	.032	.023	.022	.024	.029	.040
.367	.020	.026	.022	.020	.022	.036	.043
.400	.012	.015	.010	.013	.022	.029	.042
.433	.004	.007	.006	.011	.014	.025	.039
.467	-.004	.001	.001	.005	.005	.026	.026
.500	-.010	-.001	-.004	.000	.012	.019	.019
.533	-.011	-.004	-.009	-.003	.004	.007	.013
.567	-.013	-.008	-.013	-.005	-.006	.007	.004
.600	-.017	-.011	-.016	-.010	-.011	.000	-.007
.633	-.016	-.012	-.014	-.012	-.015	-.008	-.016
.667	-.019	-.014	-.014	-.015	-.020	-.018	-.028
.700	-.023	-.021	-.024	-.027	-.030	-.027	-.031
.733	-.022	-.022	-.028	-.034	-.037	-.035	-.044
.767	-.028	-.025	-.034	-.040	-.045	-.045	-.057
.800	-.044	-.027	-.035	-.042	-.048	-.047	-.059
.833	-.036	-.036	-.041	-.048	-.057	-.057	-.071
.867							
.900	-.052	-.049	-.055	-.063	-.069	-.068	-.083
.933	-.057	-.054	-.059	-.067	-.073	-.072	-.083
.967	-.061	-.061	-.066	-.073	-.079	-.076	-.088
1.000	-.088	-.085	-.087	-.095	-.100	-.097	-.107

TABLE 2.- PRESSURE-COEFFICIENT DATA FOR THE BODY - Continued

[M = 2.01]

$\epsilon = 3°$ $\quad \frac{2\beta y}{L(1-\epsilon\beta)} = 4.10$

x/L	θ = 0	15	30	45	60	75	90
.033	.089	.082	.093	.095	.099	.108	.102
.067	.085	.080	.089	.090	.095	.103	.098
.100	.071	.068	.076	.075	.082	.090	.084
.133	.070	.058	.067	.071	.073	.082	.070
.167	.054	.047	.057	.057	.060	.068	.060
.200	.042	.039	.047	.045	.049	.056	.046
.233	.035	.035	.042	.040	.044	.050	.037
.267	.024	.018	.025	.025	.027	.033	.032
.300							
.333	.021	.012	.020	.017	.019	.022	.013
.367	.013	.008	.015	.011	.013	.018	.009
.400	.007	-.002	.005	.002	.004	.009	-.001
.433	.008	-.013	-.006	-.010	-.008	-.006	-.015
.467	-.013	-.019	-.013	-.017	-.018	-.013	-.024
.500	-.017	-.025	-.017	-.022	-.021	-.016	-.029
.533	-.016	-.035	-.023	-.029	-.026	-.015	-.029
.567	-.021	-.034	-.025	-.030	-.030	-.025	-.043
.600	-.032	-.038	-.033	-.035	-.038	-.033	-.048
.633	-.031	-.037	-.032	-.038	-.040	-.034	-.053
.667	-.040	-.045	-.041	-.043	-.047	-.047	-.062
.700	-.047	-.051	-.046	-.050	-.053	-.053	-.067
.733	-.047	-.052	-.049	-.055	-.059	-.057	-.076
.767	-.053	-.053	-.050	-.057	-.057	-.060	-.076
.800	-.052	-.054	-.050	-.056	-.059	-.059	-.076
.833	-.053	-.055	-.051	-.057	-.062	-.063	-.081
.867	-.049	-.051	-.046	-.053	-.059	-.059	-.076
.900	-.055	-.061	-.056	-.062	-.064	-.069	-.085
.933	-.054	-.057	-.052	-.061	-.061	-.066	-.085
.967							
1.000	-.086	-.087	-.085	-.089	-.090	-.090	-.109

x/L	θ = 180	165	150	135	120	105	90
.033	.159	.149	.147	.134	.127	.118	.098
.067	.152	.145	.142	.137	.128	.119	.093
.100	.144	.138	.135	.124	.117	.107	.088
.133	.134	.127	.125	.116	.109	.100	.074
.167	.122	.113	.115	.104	.099	.091	.065
.200	.099	.094	.095	.084	.079	.071	.046
.233	.095	.089	.087	.076	.071	.063	.041
.267							
.300	.072	.065	.066	.055	.052	.045	.023
.333	.057	.053	.053	.045	.038	.034	.013
.367	.053	.047	.050	.039	.035	.027	.009
.400	.041	.034	.035	.026	.022	.015	-.001
.433	.029	.022	.024	.015	.011	.006	-.015
.467	.016	.011	.013	.003	.000	-.005	-.020
.500	.008	.003	.004	-.003	-.007	-.012	-.029
.533	.001	-.008	-.005	-.012	-.015	-.018	-.039
.567		-.016	-.013	-.019	-.026	-.022	-.048
.600		-.024	-.021	-.026	-.034	-.029	-.053
.633		-.029	-.025	-.029	-.037	-.031	-.057
.667		-.036	-.031	-.036	-.045	-.038	-.062
.700	-.035	-.039	-.034	-.036	-.046	-.036	-.076
.733	-.045	-.050	-.045	-.051	-.057	-.048	-.076
.767	-.055	-.058	-.051	-.059	-.064	-.057	-.076
.800	-.054	-.060	-.057	-.060	-.065	-.056	-.081
.833	-.064	-.066	-.063	-.068	-.071	-.063	-.081
.867							
.900	-.072	-.080	-.073	-.076	-.079	-.069	-.085
.933	-.075	-.080	-.074	-.075	-.078	-.067	-.085
.967	-.075	-.085	-.077	-.078	-.080	-.067	-.085
1.000	-.097	-.106	-.093	-.094	-.096	-.081	-.100

$\epsilon = 3°$ $\quad \frac{2\beta y}{L(1-\epsilon\beta)} = .94$

x/L	θ = 0	15	30	45	60	75	90
.033	.088	.086	.093	.097	.101	.106	.117
.067	.080	.077	.082	.090	.094	.095	.110
.100	.066	.061	.068	.073	.079	.083	.090
.133	.060	.054	.061	.069	.072	.077	.084
.167	.049	.041	.049	.054	.054	.059	.071
.200	.041	.040	.047	.047	.048	.050	.058
.233	.033	.028	.037	.040	.047	.050	.052
.267	.017	.013	.020	.022	.024	.027	.036
.300							
.333	.014	.010	.013	.015	.015	.017	.025
.367	.012	.006	.010	.010	.010	.012	.019
.400	.001	-.005	.003	.002	-.001	.001	.008
.433	-.004	-.016	-.010	-.009	-.012	-.009	-.003
.467	-.016	-.024	-.019	-.016	-.020	-.018	-.013
.500	-.024	-.030	-.022	-.023	-.027	-.022	-.021
.533	-.023	-.023	-.032	-.029	-.030	-.021	-.020
.567	-.031	-.037	-.034	-.035	-.035	-.034	-.034
.600	-.041	-.042	-.037	-.038	-.041	-.038	-.038
.633	-.035	-.041	-.037	-.044	-.044	-.042	-.044
.667	-.043	-.046	-.043	-.045	-.051	-.049	-.050
.700	-.049	-.051	-.047	-.048	-.057	-.057	-.055
.733	-.052	-.051	-.051	-.053	-.059	-.059	-.062
.767	-.053	-.057	-.050	-.057	-.061	-.062	-.065
.800	-.036	-.050	-.050	-.057	-.062	-.063	-.067
.833	-.034	-.032	-.031	-.046	-.062	-.065	-.068
.867	-.028	-.030	-.024	-.028	-.039	-.052	-.064
.900	-.035	-.039	-.037	-.040	-.048	-.048	-.065
.933	-.036	-.043	-.039	-.043	-.045	-.050	-.056
.967							
1.000	-.075	-.079	-.075	-.077	-.081	-.082	-.085

x/L	θ = 180	165	150	135	120	105	90
.033	.154	.144	.141	.133	.122	.113	.101
.067	.149	.141	.140	.134	.123	.114	.101
.100	.139	.131	.132	.125	.112	.103	.093
.133	.127	.120	.117	.111	.100	.091	.082
.167	.114	.109	.105	.101	.089	.084	.070
.200	.096	.088	.087	.082	.073	.064	.055
.233	.086	.082	.077	.072	.065	.052	.046
.267							
.300	.065	.057	.056	.053	.046	.040	.029
.333	.052	.042	.042	.044	.034	.024	.017
.367	.048	.039	.039	.035	.028	.021	.014
.400	.034	.027	.028	.024	.017	.010	.003
.433	.027	.017	.017	.013	.008	.001	-.006
.467	.013	.005	.007	.004	-.002	-.008	-.015
.500	.006	-.004	-.001	-.003	-.010	-.016	-.020
.533	-.004	-.014	-.011	-.012	-.017	-.023	-.030
.567	-.010	-.016	-.012	-.019	-.025	-.027	-.032
.600	-.019	-.026	-.019	-.028	-.032	-.034	-.038
.633	-.024	-.030	-.022	-.031	-.036	-.036	-.042
.667	-.030	-.034	-.030	-.037	-.043	-.042	-.045
.700	-.038	-.043	-.035	-.042	-.048	-.047	-.054
.733	-.046	-.050	-.044	-.051	-.057	-.057	-.060
.767	-.053	-.057	-.051	-.059	-.063	-.061	-.064
.800	-.060	-.063	-.055	-.060	-.065	-.062	-.064
.833	-.059	-.066	-.061	-.065	-.070	-.066	-.069
.867							
.900	-.074	-.079	-.071	-.075	-.077	-.070	-.061
.933	-.075	-.081	-.072	-.074	-.074	-.059	-.051
.967	-.081	-.084	-.074	-.073	-.068	-.052	-.047
1.000	-.093	-.098	-.085	-.082	-.078		-.069

TABLE 2.- PRESSURE-COEFFICIENT DATA FOR THE BODY - Continued

$$\left[M = 2.01\right]$$

$\epsilon = 3°$ $\quad \frac{2\beta y}{L(1-\epsilon\beta)} = .80$

x/L	θ = 0	15	30	45	60	75	90
.033	.085	.081	.087	.092	.104	.107	.115
.067	.079	.073	.077	.082	.095	.098	.105
.100	.069	.063	.066	.074	.085	.088	.090
.133	.060	.056	.062	.066	.076	.081	.086
.167	.048	.044	.053	.056	.069	.070	.070
.200	.040	.034	.039	.042	.050	.052	.058
.233	.034	.030	.036	.039	.046	.045	.052
.267	.013	.014	.020	.021	.029	.028	.034
.300							
.333	.015	.007	.015	.014	.022	.018	.024
.367	.013	.004	.011	.010	.017	.014	.015
.400	.002	-.005	.002	.001	.005	.003	.006
.433	-.003	-.017	-.011	-.009	-.005	-.008	-.007
.467	-.016	-.028	-.021	-.018	-.014	-.014	-.017
.500	-.024	-.033	-.026	-.026	-.022	-.022	-.026
.533	-.024	-.034	-.032	-.035	-.025	-.023	-.025
.567	-.032	-.036	-.033	-.033	-.030	-.034	-.038
.600	-.038	-.043	-.039	-.038	-.037	-.042	-.042
.633	-.038	-.040	-.041	-.039	-.037	-.041	-.044
.667	-.039	-.044	-.046	-.043	-.041	-.049	-.054
.700	-.020	-.022	-.021	-.042	-.047	-.057	-.059
.733	-.027	-.028	-.023	-.027	-.031	-.057	-.064
.767	-.033	-.034	-.031	-.031	-.027	-.047	-.062
.800	-.032	-.036	-.034	-.032	-.029	-.038	-.055
.833	-.032	-.037	-.037	-.036	-.036	-.042	-.052
.867	-.031	-.035	-.035	-.033	-.032	-.038	-.044
.900	-.041	-.047	-.045	-.042	-.043	-.049	-.058
.933	-.042	-.050	-.046	-.047	-.046	-.052	-.056
.967							
1.000	-.079	-.083	-.081	-.080	-.079	-.085	-.088

x/L	θ = 180	165	150	135	120	105	90
.033	.152	.141	.137	.131	.125	.113	.101
.067	.146	.139	.134	.131	.127	.110	.098
.100	.137	.131	.127	.123	.117	.104	.090
.133	.126	.118	.114	.109	.105	.092	.079
.167	.115	.108	.103	.099	.093	.082	.071
.200	.094	.086	.086	.083	.079	.067	.056
.233	.086	.081	.075	.073	.071	.058	.045
.267							
.300	.064	.057	.056	.052	.050	.041	.029
.333	.053	.044	.043	.039	.040	.025	.021
.367	.045	.039	.039	.035	.035	.027	.013
.400	.034	.026	.026	.023	.022	.013	.004
.433	.025	.016	.017	.012	.013	.004	-.008
.467	.014	.004	.005	.002	.002	-.005	-.016
.500	.005	-.002	-.002	-.004	-.003	-.012	-.021
.533	-.005	-.014	-.011	-.012	-.012	-.018	-.029
.567	-.011	-.020	-.013	-.020	-.021	-.027	-.030
.600	-.021	-.028	-.022	-.028	-.028	-.033	-.036
.633	-.026	-.033	-.025	-.032	-.032	-.036	-.038
.667	-.032	-.039	-.032	-.038	-.040	-.040	-.045
.700	-.040	-.045	-.036	-.043	-.044	-.046	-.051
.733	-.048	-.054	-.046	-.052	-.049	-.055	-.055
.767	-.055	-.061	-.054	-.059	-.057	-.061	-.053
.800	-.057	-.065	-.057	-.062	-.059	-.058	-.045
.833	-.070	-.070	-.063	-.066	-.060	-.049	-.041
.867							
.900	-.076	-.082	-.069	-.067	-.055	-.050	-.048
.933	-.072	-.079	-.067	-.053	-.052	-.049	-.048
.967	-.072	-.077	-.064	-.062	-.053	-.049	-.048
1.000	-.093	-.097	-.076	-.075	-.068	-.068	-.070

$\epsilon = 3°$ $\quad \frac{2\beta y}{L(1-\epsilon\beta)} = .66$

x/L	θ = 0	15	30	45	60	75	90
.033	.086	.073	.083	.087	.097	.099	.109
.067	.079	.071	.078	.084	.093	.095	.103
.100	.070	.065	.074	.082	.092	.095	.097
.133	.060	.054	.062	.068	.076	.077	.087
.167	.051	.043	.050	.054	.062	.064	.071
.200	.043	.034	.041	.044	.049	.050	.056
.233	.036	.031	.036	.040	.044	.048	.050
.267	.018	.014	.020	.022	.027	.028	.037
.300							
.333	.018	.008	.014	.016	.020	.019	.023
.367	.016	.005	.009	.011	.014	.013	.011
.400	.005	-.008	.000	.003	.004	.003	.004
.433	-.020	-.017	-.011	-.011	-.008	-.010	-.008
.467	-.015	-.027	-.019	-.020	-.014	-.019	-.016
.500	-.021	-.031	-.022	-.025	-.019	-.024	-.027
.533	-.037	-.042	-.031	-.028	-.030	-.023	-.024
.567	.004	-.008	.000	-.032	-.030	-.037	-.038
.600	.000	-.007	.002	-.003	-.026	-.042	-.043
.633	-.006	-.013	-.005	-.006	-.004	-.028	-.044
.667	-.013	-.024	-.016	-.016	-.013	-.020	-.039
.700	-.022	-.033	-.025	-.027	-.022	-.030	-.032
.733	-.028	-.038	-.032	-.030	-.030	-.037	-.040
.767	-.034	-.045	-.037	-.038	-.035	-.040	-.044
.800	-.036	-.046	-.039	-.041	-.038	-.043	-.048
.833	-.042	-.050	-.043	-.047	-.042	-.047	-.049
.867	-.035	-.048	-.041	-.042	-.040	-.044	-.049
.900	-.046	-.062	-.054	-.055	-.052	-.059	-.063
.933	-.053	-.062	-.054	-.058	-.053	-.060	-.063
.967							
1.000	-.082	-.095	-.087	-.089	-.087	-.093	-.092

x/L	θ = 180	165	150	135	120	105	90
.033	.153	.135	.138	.126	.123	.109	.097
.067	.147	.132	.138	.123	.123	.109	.094
.100	.141	.127	.129	.118	.114	.101	.092
.133	.128	.115	.117	.110	.109	.097	.085
.167	.119	.105	.108	.101	.095	.080	.071
.200	.099	.087	.091	.080	.078	.062	.056
.233	.087	.074	.082	.072	.068	.056	.047
.267							
.300	.070	.054	.061	.052	.049	.038	.031
.333	.055	.042	.050	.038	.040	.026	.020
.367	.050	.037	.041	.033	.033	.019	.015
.400	.036	.023	.030	.019	.020	.009	.005
.433	.024	.012	.020	.011	.011	.000	-.003
.467	.015	.002	.009	.000	.002	-.009	-.014
.500	.007	-.006	.002	-.007	-.006	-.017	-.021
.533	.000	-.016	-.006	-.014	-.014	-.023	-.026
.567	-.010	-.019	-.014	-.016	-.021	-.028	-.030
.600	-.019	-.028	-.023	-.024	-.029	-.033	-.035
.633	-.023	-.033	-.027	-.027	-.031	-.035	-.039
.667	-.031	-.039	-.032	-.033	-.037	-.039	-.030
.700	-.037	-.044	-.039	-.039	-.041	-.041	-.035
.733	-.044	-.051	-.048	-.047	-.045	-.038	-.036
.767	-.052	-.063	-.055	-.049	-.043	-.039	-.038
.800	-.060	-.061	-.055	-.050	-.042	-.042	-.040
.833	-.060	-.065	-.056	-.049	-.044	-.045	-.043
.867							
.900	-.063	-.070	-.060	-.057	-.055	-.053	-.054
.933	-.062	-.067	-.059	-.056	-.053	-.055	-.054
.967	-.065	-.067	-.060	-.058	-.056	-.057	-.058
1.000	-.091	-.092	-.075	-.073	-.071	-.072	-.076

TABLE 2.- PRESSURE-COEFFICIENT DATA FOR THE BODY - Continued

[M = 2.01]

$\epsilon = 3°$ $\quad \frac{2\beta y}{L(1-\epsilon\beta)} = .52$

x/L	θ = 0	15	30	45	60	75	90
.033	.079	.078	.092	.094	.102	.104	.111
.067	.078	.076	.084	.089	.098	.100	.110
.100	.068	.064	.075	.073	.083	.088	.092
.133	.058	.056	.066	.065	.073	.076	.085
.167	.048	.045	.054	.055	.062	.066	.074
.200	.038	.035	.044	.045	.051	.055	.059
.233	.030	.029	.039	.037	.044	.046	.051
.267	.033	.013	.021	.020	.026	.029	.038
.300							
.333	.013	.007	.017	.013	.020	.016	.024
.367	.008	.002	.014	.006	.014	.015	.015
.400	-.001	-.005	.003	.001	.002	.004	.005
.433	.023	.021	.006	-.013	-.007	-.008	-.006
.467	.018	.019	.028	.018	-.014	-.013	-.017
.500	.010	.010	.021	.015	.018	-.011	-.025
.533	-.012	-.011	.007	.003	.004	.011	-.014
.567	-.004	-.007	.004	-.008	-.002	-.003	-.010
.600	-.014	-.018	-.008	-.010	-.008	-.011	-.014
.633	-.016	-.023	-.014	-.015	-.014	-.014	-.018
.667	-.031	-.032	-.024	-.028	-.025	-.026	-.027
.700	-.038	-.041	-.033	-.034	-.031	-.033	-.036
.733	-.042	-.048	-.042	-.044	-.040	-.040	-.045
.767	-.049	-.055	-.047	-.049	-.047	-.045	-.049
.800	-.055	-.062	-.051	-.055	-.049	-.049	-.056
.833	-.050	-.057	-.048	-.056	-.055	-.057	-.059
.867	-.048	-.054	-.045	-.051	-.049	-.051	-.058
.900	-.060	-.066	-.057	-.064	-.062	-.063	-.071
.933	-.058	-.069	-.060	-.064	-.064	-.064	-.073
.967							
1.000	-.089	-.099	-.090	-.094	-.092	-.094	-.102

x/L	θ = 180	165	150	135	120	105	90
.033	.145	.137	.140	.127	.120	.111	.096
.067	.142	.134	.141	.129	.123	.114	.094
.100	.134	.129	.132	.122	.113	.106	.089
.133	.125	.118	.120	.110	.102	.095	.082
.167	.115	.105	.111	.099	.091	.086	.070
.200	.095	.089	.092	.081	.074	.067	.052
.233	.084	.074	.086	.072	.066	.059	.045
.267							
.300	.070	.055	.064	.050	.046	.041	.027
.333	.053	.043	.052	.042	.035	.029	.020
.367	.047	.037	.046	.035	.030	.026	.012
.400	.034	.024	.033	.021	.018	.014	.002
.433	.024	.013	.022	.011	.008	.004	-.005
.467	.013	.000	.012	.001	-.003	-.005	-.014
.500	.006	-.005	.005	-.007	-.009	-.012	-.019
.533	-.004	-.015	-.005	-.016	-.017	-.018	-.013
.567	-.011	-.016	-.012	-.019	-.021	-.018	-.003
.600	-.020	-.026	-.019	-.027	-.022	-.011	-.007
.633	-.027	-.030	-.024	-.026	-.022	-.015	-.016
.667	-.032	-.036	-.026	-.028	-.021	-.019	-.019
.700	-.041	-.042	-.030	-.037	-.032	-.033	-.034
.733	-.042	-.046	-.033	-.039	-.035	-.037	-.040
.767	-.046	-.047	-.036	-.044	-.041	-.044	-.045
.800	-.048	-.049	-.041	-.047	-.045	-.044	-.049
.833	-.052	-.054	-.043	-.050	-.050	-.051	-.054
.867							
.900	-.064	-.063	-.054	-.062	-.060	-.063	-.061
.933	-.059	-.063	-.058	-.062	-.061	-.061	-.062
.967	-.063	-.066	-.061	-.066	-.063	-.063	-.064
1.000	-.097	-.091	-.076	-.080	-.081	-.082	-.084

$\epsilon = 3°$ $\quad \frac{2\beta y}{L(1-\epsilon\beta)} = .39$

x/L	θ = 0	15	30	45	60	75	90
.033	.083	.078	.086	.094	.099	.100	.112
.067	.079	.078	.085	.090	.097	.099	.108
.100	.068	.065	.076	.077	.081	.084	.096
.133	.060	.057	.066	.069	.074	.076	.086
.167	.048	.045	.053	.058	.060	.062	.074
.200	.035	.035	.044	.046	.050	.052	.063
.233	.030	.033	.038	.039	.041	.043	.050
.267	.026	.016	.020	.023	.026	.026	.041
.300							
.333	.065	.062	.070	.041	.021	.019	.025
.367	.060	.059	.066	.064	.050	.018	.017
.400	.039	.039	.046	.049	.048	.034	.015
.433	.029	.024	.034	.031	.033	.029	.019
.467	.014	.008	.019	.017	.019	.015	.019
.500	.000	.001	.008	.008	.008	.006	.009
.533	-.006	-.015	.002	.002	.003	.006	.005
.567	-.005	-.008	.000	-.008	-.006	-.009	-.011
.600	-.020	-.022	-.011	-.012	-.011	-.017	-.019
.633	-.030	-.031	-.022	-.018	-.016	-.018	-.021
.667	-.042	-.048	-.035	-.032	-.030	-.031	-.032
.700	-.055	-.058	-.047	-.045	-.041	-.040	-.039
.733	-.061	-.067	-.056	-.052	-.053	-.048	-.047
.767	-.068	-.070	-.064	-.061	-.061	-.058	-.055
.800	-.072	-.076	-.067	-.067	-.066	-.064	-.060
.833	-.068	-.076	-.068	-.072	-.068	-.068	-.069
.867	-.060	-.071	-.065	-.066	-.065	-.068	-.067
.900	-.073	-.080	-.069	-.075	-.079	-.081	-.080
.933	-.074	-.078	-.074	-.075	-.077	-.081	-.083
.967							
1.000	-.099	-.108	-.100	-.101	-.103	-.105	-.112

x/L	θ = 180	165	150	135	120	105	90
.033	.148	.138	.137	.130	.120	.107	.099
.067	.139	.135	.136	.128	.120	.108	.096
.100	.136	.129	.129	.121	.114	.101	.089
.133	.126	.119	.118	.109	.102	.091	.084
.167	.113	.107	.106	.101	.092	.080	.070
.200	.095	.088	.089	.082	.076	.063	.056
.233	.086	.079	.080	.073	.065	.055	.044
.267							
.300	.062	.057	.057	.052	.045	.039	.028
.333	.054	.043	.048	.041	.035	.024	.018
.367	.045	.041	.041	.035	.028	.020	.010
.400	.033	.025	.029	.022	.018	.010	.018
.433	.021	.014	.018	.012	.009	.011	.023
.467	.010	.003	.007	.003	.007	.011	.020
.500	.002		.001	.003	.008	.014	.014
.533	-.006		-.004	-.002	.002	.003	.001
.567	-.012	-.016	-.004	-.006	-.004	-.005	-.007
.600	-.018	-.021	-.008	-.014	-.009	-.011	-.015
.633	-.022	-.024	-.014	-.018	-.016	-.016	-.021
.667	-.027	-.028	-.018	-.022	-.021	-.022	-.025
.700	-.036	-.037	-.027	-.033	-.029	-.031	-.031
.733	-.039	-.041	-.032	-.039	-.036	-.036	-.040
.767	-.042	-.046	-.036	-.043	-.042	-.044	-.050
.800	-.045	-.047	-.039	-.044	-.043	-.047	-.058
.833	-.053	-.053	-.044	-.050	-.050	-.056	-.063
.867							
.900	-.060	-.066	-.059	-.067	-.065	-.069	-.076
.933	-.063	-.071	-.063	-.070	-.070	-.072	-.081
.967	-.071	-.076	-.069	-.075	-.074	-.077	-.081
1.000	-.101	-.100	-.089	-.093	-.094	-.093	-.101

TABLE 2.- PRESSURE-COEFFICIENT DATA FOR THE BODY - Continued

$$\left[M = 2.01\right]$$

$\epsilon = -3^\circ$ $\quad \frac{2\beta y}{L(1-\epsilon\beta)} = 3.57$

x/L	θ = 0	15	30	45	60	75	90
.033	.157	.156	.153	.141	.141	.127	.119
.067	.152	.146	.148	.137	.138	.125	.115
.100	.134	.133	.133	.119	.120	.109	.099
.133	.117	.119	.121	.110	.111	.097	.090
.167	.108	.108	.109	.098	.097	.084	.073
.200	.097	.095	.096	.084	.086	.072	.063
.233	.084	.084	.084	.075	.072	.061	.056
.267	.069	.060	.061	.059	.050	.038	.043
.300							
.333	.058	.056	.057	.041	.044	.032	.026
.367	.052	.046	.049	.040	.039	.027	.023
.400	.039	.034	.037	.029	.024	.017	.013
.433	.022	.021	.023	.014	.013	.004	-.001
.467	.012	.006	.012	.001	.002	-.006	-.010
.500	.001	-.002	.005	-.005	-.005	-.014	-.019
.533	-.008	.001	-.003	-.014	-.013	-.012	-.016
.567	-.010	-.016	-.012	-.020	-.019	-.023	-.029
.600	-.020	-.024	-.019	-.028	-.025	-.030	-.036
.633	-.021	-.026	-.023	-.030	-.028	-.032	-.039
.667	-.032	-.038	-.032	-.042	-.037	-.044	-.048
.700	-.043	-.048	-.041	-.049	-.049	-.052	-.054
.733	-.048	-.051	-.048	-.056	-.055	-.061	-.059
.767	-.055	-.058	-.054	-.064	-.059	-.063	-.063
.800	-.058	-.063	-.060	-.068	-.061	-.062	-.064
.833	-.066	-.068	-.064	-.070	-.063	-.069	-.067
.867	-.063	-.067	-.061	-.068	-.063	-.067	-.065
.900	-.073	-.082	-.076	-.084	-.076	-.076	-.075
.933	-.079	-.087	-.080	-.087	-.079	-.079	-.076
.967							
1.000	-.103	-.116	-.105	-.110	-.104	-.098	-.100

x/L	θ = 180	165	150	135	120	105	90
.033	.091	.089	.094	.095	.107	.111	.116
.067	.084	.081	.085	.083	.095	.100	.106
.100	.080	.072	.082	.078	.091	.095	.097
.133	.070	.066	.073	.070	.084	.087	.092
.167	.063	.056	.062	.058	.069	.073	.076
.200	.047	.042	.046	.044	.054	.057	.063
.233	.040	.034	.039	.036	.046	.048	.051
.267							
.300	.024	.021	.023	.022	.032	.034	.034
.333	.015	.010	.014	.013	.022	.024	.026
.367	.013	.006	.013	.007	.014	.018	.016
.400	.004	-.005	.001	-.002	.004	.006	.009
.433	-.004	-.012	-.007	-.010	-.004	-.003	-.002
.467	-.010	-.018	-.015	-.019	-.013	-.011	-.010
.500	-.016	-.021	-.016	-.023	-.017	-.016	-.016
.533	-.020	-.028	-.022	-.029	-.022	-.023	-.022
.567	-.024	-.029	-.026	-.032	-.030	-.027	-.027
.600	-.030	-.036	-.032	-.037	-.034	-.035	-.037
.633	-.031	-.035	-.033	-.039	-.037	-.037	-.037
.667	-.034	-.040	-.037	-.044	-.041	-.044	-.043
.700	-.037	-.043	-.038	-.047	-.044	-.042	-.044
.733	-.044	-.048	-.046	-.052	-.052	-.053	-.055
.767	-.052	-.051	-.050	-.057	-.056	-.059	-.064
.800	-.047	-.050	-.048	-.056	-.056	-.058	-.063
.833	-.053	-.052	-.049	-.059	-.058	-.062	-.067
.867							
.900	-.052	-.057	-.051	-.060	-.062	-.065	-.069
.933	-.045	-.052	-.048	-.056	-.057	-.061	-.067
.967	-.043	-.050	-.048	-.056	-.057	-.064	-.067
1.000	-.068	-.074	-.070	-.080	-.079	-.080	-.084

$\epsilon = -3^\circ$ $\quad \frac{2\beta y}{L(1-\epsilon\beta)} = 1.10$

x/L	θ = 0	15	30	45	60	75	90
.033	.156	.158	.157	.154	.141	.128	.118
.067	.156	.151	.154	.155	.145	.135	.120
.100	.135	.132	.135	.128	.116	.108	.097
.133	.121	.118	.122	.117	.108	.097	.083
.167	.104	.101	.106	.103	.092	.083	.073
.200	.091	.088	.093	.089	.080	.070	.059
.233	.084	.080	.085	.080	.070	.060	.053
.267	.077	.059	.063	.065	.050	.040	.038
.300							
.333	.058	.051	.058	.056	.046	.037	.024
.367	.049	.043	.048	.043	.039	.031	.021
.400	.037	.033	.036	.034	.025	.016	.009
.433	.025	.016	.020	.020	.013	.002	-.002
.467	.015	.004	.011	.008	.001	-.007	-.014
.500	.004	-.001	.004	-.002	-.007	-.013	-.019
.533	-.005	-.013	-.005	-.007	-.009	-.015	-.018
.567	-.011	-.018	-.012	-.019	-.019	-.028	-.032
.600	-.023	-.028	-.021	-.024	-.028	-.033	-.042
.633	-.022	-.029	-.021	-.028	-.032	-.036	-.042
.667	-.034	-.040	-.030	-.038	-.039	-.045	-.054
.700	-.043	-.047	-.039	-.047	-.048	-.051	-.059
.733	-.052	-.055	-.044	-.051	-.053	-.060	-.064
.767	-.056	-.055	-.052	-.058	-.058	-.063	-.071
.800	-.059	-.063	-.057	-.061	-.059	-.062	-.068
.833	-.068	-.069	-.062	-.067	-.065	-.066	-.070
.867	-.062	-.067	-.062	-.065	-.063	-.062	-.067
.900	-.074	-.083	-.073	-.081	-.074	-.074	-.077
.933	-.079	-.088	-.075	-.081	-.080	-.076	-.079
.967							
1.000	-.083	-.088	-.072	-.102	-.093	-.087	-.090

x/L	θ = 180	165	150	135	120	105	90
.033	.087	.082	.093	.094	.103	.110	.110
.067	.082	.077	.084	.083	.092	.095	.098
.100	.077	.070	.079	.079	.088	.092	.091
.133	.068	.062	.072	.071	.081	.084	.087
.167	.059	.049	.060	.054	.065	.068	.069
.200	.044	.035	.044	.042	.049	.053	.053
.233	.034	.026	.039	.034	.041	.044	.043
.267							
.300	.022	.012	.024	.019	.027	.029	.022
.333	.013	.003	.015	.012	.016	.019	.014
.367	.006	-.001	.012	.006	.013	.018	.012
.400	-.004	-.011	.001	-.002	.004	.007	.003
.433	-.010	-.016	-.007	-.009	-.004	-.002	-.003
.467	-.017	-.021	-.013	-.018	-.011	-.010	-.013
.500	-.018	-.023	-.016	-.022	-.015	-.015	-.017
.533	-.024	-.029	-.021	-.028	-.022	-.022	-.024
.567	-.031	-.033	-.026	-.030	-.027	-.030	-.032
.600	-.037	-.039	-.030	-.034	-.033	-.034	-.039
.633	-.037	-.040	-.033	-.038	-.036	-.037	-.042
.667	-.041	-.044	-.038	-.041	-.040	-.043	-.049
.700	-.045	-.046	-.041	-.045	-.044	-.047	-.051
.733	-.048	-.050	-.046	-.050	-.049	-.053	-.060
.767	-.050	-.052	-.049	-.053	-.052	-.059	-.065
.800	-.052	-.051	-.046	-.050	-.051	-.058	-.067
.833	-.056	-.053	-.049	-.053	-.053	-.061	-.071
.867							
.900	-.057	-.054	-.050	-.057	-.059	-.064	-.075
.933	-.049	-.051	-.047	-.052	-.053	-.062	-.071
.967	-.047	-.052	-.046	-.052	-.052	-.060	-.072
1.000	-.073	-.072	-.067	-.072	-.071	-.074	-.080

TABLE 2.- PRESSURE-COEFFICIENT DATA FOR THE BODY - Continued

[M = 2.01]

$\epsilon = -3°$ $\quad \frac{2\beta y}{L(1-\epsilon\beta)} = .99$

x/L	θ = 0	15	30	45	60	75	90
.033	.153	.154	.152	.155	.139	.128	.113
.067	.146	.146	.148	.150	.136	.126	.112
.100	.130	.127	.130	.132	.117	.110	.099
.133	.118	.115	.117	.118	.102	.094	.081
.167	.098	.099	.101	.105	.092	.084	.073
.200	.090	.087	.090	.093	.079	.071	.057
.233	.081	.080	.080	.082	.068	.060	.052
.267	.068	.062	.061	.068	.050	.042	.039
.300							
.333	.056	.050	.053	.052	.041	.033	.024
.367	.049	.044	.046	.048	.033	.028	.020
.400	.034	.032	.034	.038	.023	.018	.009
.433	.023	.014	.019	.024	.011	.004	-.002
.467	.008	.004	.009	.010	-.001	-.007	-.012
.500	.000	-.004	.001	.002	-.006	-.013	-.024
.533	-.003	-.016	-.014	-.005	-.020	-.014	-.020
.567	-.016	-.021	-.014	-.017	-.020	-.026	-.034
.600	-.025	-.028	-.022	-.022	-.030	-.032	-.040
.633	-.026	-.029	-.025	-.025	-.030	-.035	-.045
.667	-.038	-.041	-.033	-.032	-.040	-.044	-.051
.700	-.047	-.049	-.041	-.039	-.048	-.050	-.061
.733	-.057	-.057	-.047	-.047	-.056	-.058	-.064
.767	-.059	-.058	-.054	-.053	-.060	-.060	-.070
.800	-.063	-.063	-.058	-.058	-.063	-.064	-.070
.833	-.069	-.071	-.064	-.062	-.068	-.068	-.072
.867	-.049	-.050	-.063	-.061	-.065	-.064	-.069
.900	-.033	-.033	-.034	-.034	-.067	-.074	-.076
.933	-.042	-.046	-.044	-.044	-.057	-.053	-.069
.967							
1.000	-.093	-.093	-.083	-.082	-.090	-.082	-.084

x/L	θ = 180	165	150	135	120	105	90
.033	.082	.081	.089	.096	.101	.108	.110
.067	.078	.076	.081	.083	.091	.096	.099
.100	.073	.068	.076	.082	.086	.091	.092
.133	.064	.061	.069	.073	.079	.083	.086
.167	.054	.050	.057	.060	.062	.067	.069
.200	.037	.034	.040	.043	.047	.052	.054
.233	.032	.029	.033	.036	.040	.043	.044
.267							
.300	.016	.013	.021	.022	.024	.028	.027
.333	.007	.006	.012	.013	.016	.020	.020
.367	.005	.000	.009	.011	.013	.016	.010
.400	-.006	-.009	-.001	.002	.002	.005	.002
.433	-.011	-.014	-.007	-.007	-.003	-.001	-.005
.467	-.019	-.021	-.013	-.015	-.012	-.010	-.014
.500	-.017	-.022	-.016	-.020	-.017	-.015	-.019
.533	-.024	-.029	-.023	-.027	-.024	-.023	-.026
.567	-.030	-.034	-.025	-.028	-.029	-.029	-.033
.600	-.034	-.038	-.030	-.035	-.033	-.034	-.040
.633	-.038	-.041	-.033	-.035	-.036	-.037	-.044
.667	-.038	-.045	-.036	-.039	-.041	-.042	-.046
.700	-.046	-.049	-.040	-.043	-.045	-.046	-.052
.733	-.047	-.050	-.045	-.047	-.049	-.052	-.061
.767	-.054	-.054	-.048	-.053	-.053	-.057	-.067
.800	-.049	-.053	-.047	-.049	-.052	-.057	-.065
.833	-.054	-.053	-.049	-.052	-.055	-.061	-.071
.867							
.900	-.059	-.057	-.049	-.053	-.058	-.062	-.070
.933	-.048	-.052	-.047	-.051	-.052	-.049	-.058
.967	-.044	-.051	-.044	-.042	-.040	-.040	-.043
1.000	-.065	-.065	-.060	-.063	-.062	-.062	-.065

$\epsilon = -3°$ $\quad \frac{2\beta y}{L(1-\epsilon\beta)} = .87$

x/L	θ = 0	15	30	45	60	75	90
.033	.159	.152	.152	.155	.142	.125	.114
.067	.152	.146	.148	.149	.136	.122	.112
.100	.132	.127	.129	.128	.117	.108	.095
.133	.124	.118	.117	.121	.107	.093	.084
.167	.108	.104	.105	.107	.094	.081	.072
.200	.095	.090	.091	.093	.081	.069	.058
.233	.088	.084	.085	.091	.077	.062	.051
.267	.066	.065	.065	.069	.052	.041	.041
.300							
.333	.061	.054	.052	.053	.042	.033	.026
.367	.051	.046	.046	.048	.034	.027	.021
.400	.039	.032	.034	.038	.024	.016	.010
.433	.023	.017	.019	.022	.012	.004	-.001
.467	.011	.005	.007	.010	.001	-.007	-.014
.500	.002	-.003	.001	.001	-.008	-.017	-.022
.533	.002	-.016	-.011	-.006	-.016	-.018	-.023
.567	-.012	-.018	-.012	-.012	-.023	-.029	-.038
.600	-.022	-.027	-.022	-.020	-.031	-.037	-.044
.633	-.023	-.029	-.022	-.024	-.032	-.040	-.046
.667	-.034	-.039	-.035	-.032	-.039	-.047	-.052
.700	-.043	-.047	-.043	-.041	-.049	-.052	-.060
.733	-.050	-.053	-.050	-.048	-.052	-.059	-.064
.767	-.024	-.014	-.005	-.052	-.051	-.065	-.071
.800	-.004	-.012	-.012	-.015	-.044	-.062	-.072
.833	-.020	-.026	-.023	-.026	-.031	-.044	-.056
.867	-.021	-.030	-.029	-.028	-.031	-.042	-.043
.900	-.037	-.048	-.047	-.046	-.052	-.063	-.059
.933	-.053	-.061	-.060	-.055	-.062	-.065	-.062
.967							
1.000	-.099	-.108	-.102	-.098	-.097	-.094	-.091

x/L	θ = 180	165	150	135	120	105	90
.033	.087	.081	.086	.096	.100	.104	.111
.067	.081	.074	.079	.087	.093	.093	.098
.100	.073	.068	.074	.081	.086	.087	.092
.133	.068	.062	.065	.073	.076	.078	.085
.167	.056	.049	.052	.060	.063	.064	.067
.200	.040	.034	.039	.044	.048	.050	.056
.233	.033	.028	.031	.038	.039	.041	.045
.267							
.300	.020	.012	.019	.024	.026	.028	.030
.333	.009	.004	.011	.014	.014	.018	.021
.367	.006	.003	.007	.013	.013	.015	.013
.400	-.002	-.007	-.003	.003	.003	.003	.007
.433	-.006	-.013	-.009	-.007	-.005	-.005	-.001
.467	-.014	-.019	-.016	-.014	-.014	-.013	-.009
.500	-.015	-.024	-.020	-.017	-.017	-.018	-.017
.533	-.024	-.032	-.028	-.025	-.025	-.027	-.024
.567	-.026	-.035	-.030	-.032	-.028	-.031	-.031
.600	-.032	-.041	-.035	-.037	-.034	-.036	-.038
.633	-.035	-.042	-.036	-.039	-.036	-.039	-.041
.667	-.039	-.045	-.038	-.041	-.040	-.043	-.046
.700	-.046	-.050	-.044	-.046	-.044	-.048	-.052
.733	-.043	-.053	-.047	-.050	-.050	-.053	-.059
.767	-.049	-.057	-.052	-.056	-.055	-.059	-.064
.800	-.050	-.055	-.050	-.055	-.053	-.058	-.065
.833	-.053	-.057	-.050	-.057	-.053	-.050	-.050
.867							
.900	-.057	-.055	-.044	-.042	-.040	-.048	-.051
.933	-.043	-.042	-.034	-.036	-.037	-.044	-.054
.967	-.029	-.030	-.028	-.032	-.036	-.045	-.061
1.000	-.055	-.060	-.057	-.063	-.064	-.069	-.077

TABLE 2.- PRESSURE-COEFFICIENT DATA FOR THE BODY - Concluded

$$\left[M = 2.01\right]$$

$\epsilon = -3^\circ$ $\quad \frac{2\beta y}{L(1-\epsilon\beta)} = .76$

x/L	θ = 0	15	30	45	60	75	90
.033	.150	.149	.154	.154	.138	.124	.117
.067	.142	.136	.143	.146	.130	.115	.109
.100	.125	.122	.123	.133	.116	.105	.092
.133	.114	.114	.117	.124	.108	.096	.085
.167	.107	.113	.108	.115	.093	.081	.069
.200	.087	.088	.091	.095	.080	.068	.060
.233	.080	.081	.082	.086	.071	.058	.050
.267	.066	.062	.064	.069	.050	.039	.040
.300							
.333	.054	.049	.053	.055	.040	.030	.022
.367	.046	.041	.045	.049	.032	.024	.021
.400	.034	.029	.031	.040	.022	.015	.008
.433	.020	.015	.018	.024	.009	.002	-.005
.467	.008	.005	.007	.009	-.004	-.009	-.017
.500	-.001	-.008	.000	-.001	-.011	-.017	-.024
.533	-.012	-.019	-.011	-.007	-.018	-.016	-.021
.567	-.016	-.023	-.012	-.012	-.024	-.029	-.034
.600	-.024	-.027	-.021	-.020	-.030	-.036	-.042
.633	-.020	-.015	-.024	-.019	-.033	-.036	-.041
.667	.026	.026	.020	.021	-.029	-.045	-.052
.700	.008	.008	.007	.006	-.022	-.034	-.058
.733	-.003	-.007	-.005	-.006	-.017	-.024	-.038
.767	-.014	-.017	-.014	-.019	-.029	-.036	-.044
.800	-.022	-.029	-.024	-.025	-.039	-.042	-.049
.833	-.033	-.045	-.036	-.038	-.047	-.048	-.058
.867	-.041	-.050	-.043	-.044	-.052	-.053	-.055
.900	-.063	-.070	-.066	-.065	-.073	-.071	-.068
.933	-.075	-.084	-.078	-.076	-.083	-.076	-.076
.967							
1.000	-.115	-.124	-.111	-.106	-.112	-.103	-.099

x/L	θ = 180	165	150	135	120	105	90
.033	.085	.080	.085	.096	.099	.105	.111
.067	.076	.074	.078	.086	.089	.093	.099
.100	.070	.065	.070	.079	.081	.088	.090
.133	.063	.059	.063	.072	.073	.079	.083
.167	.054	.049	.053	.061	.060	.065	.064
.200	.038	.032	.037	.045	.046	.051	.056
.233	.033	.025	.029	.040	.041	.043	.044
.267							
.300	.019	.013	.016	.022	.024	.026	.029
.333	.011	.005	.009	.014	.015	.017	.019
.367	.004	.007	.007	.014	.015	.016	.013
.400	-.002	-.006	-.004	-.001	.001	.004	.004
.433	-.008	-.013	-.012	-.006	-.008	-.005	-.004
.467	-.015	-.021	-.018	-.014	-.015	-.013	-.012
.500	-.020	-.024	-.021	-.018	-.018	-.019	-.017
.533	-.026	-.030	-.028	-.024	-.025	-.026	-.026
.567	-.029	-.035	-.029	-.026	-.028	-.028	-.030
.600	-.033	-.041	-.035	-.030	-.033	-.033	-.036
.633	-.037	-.041	-.036	-.033	-.037	-.037	-.039
.667	-.037	-.044	-.038	-.037	-.042	-.044	-.043
.700	-.042	-.050	-.043	-.042	-.046	-.048	-.047
.733	-.046	-.050	-.046	-.046	-.049	-.043	-.033
.767	-.053	-.055	-.050	-.044	-.040	-.039	-.038
.800	-.045	-.052	-.046	-.038	-.037	-.042	-.044
.833	-.041	-.045	-.039	-.036	-.038	-.042	-.048
.867							
.900	-.030	-.033	-.032	-.034	-.044	-.053	-.064
.933	-.018	-.025	-.025	-.030	-.041	-.052	-.068
.967	-.015	-.024	-.023	-.030	-.040	-.052	-.070
1.000	-.049	-.060	-.058	-.062	-.068	-.073	-.088

$\epsilon = -3^\circ$ $\quad \frac{2\beta y}{L(1-\epsilon\beta)} = .66$

x/L	θ = 0	15	30	45	60	75	90
.033	.156	.149	.148	.152	.132	.121	.120
.067	.145	.138	.138	.146	.129	.117	.111
.100	.131	.126	.124	.132	.114	.104	.098
.133	.121	.121	.119	.131	.114	.098	.090
.167	.110	.105	.103	.111	.092	.082	.077
.200	.095	.091	.089	.097	.078	.067	.059
.233	.087	.082	.080	.087	.069	.060	.055
.267	.065	.065	.064	.070	.050	.041	.041
.300							
.333	.057	.049	.051	.057	.039	.033	.027
.367	.049	.042	.042	.053	.033	.028	.025
.400	.036	.029	.032	.042	.021	.015	.012
.433	.031	.017	.015	.026	.007	.002	-.003
.467	.012	.001	.006	.013	-.005	-.008	-.013
.500	.000	-.002	.002	.005	-.009	-.017	-.019
.533	-.014	-.015	-.010	.002	-.014	-.015	-.019
.567	.040	-.007	.047	.004	-.012	-.027	-.031
.600	.038	.048	.046	.040	-.006	-.021	-.039
.633	.026	.035	.033	.028	.016	-.002	-.015
.667	.018	.020	.013	.014	-.003	-.013	-.023
.700	-.001	-.001	-.002	-.003	-.021	-.024	-.036
.733	-.014	-.016	-.019	-.018	-.030	-.034	-.042
.767	-.028	-.030	-.033	-.029	-.044	-.045	-.047
.800	-.042	-.042	-.045	-.043	-.053	-.055	-.058
.833	-.056	-.057	-.058	-.058	-.062	-.062	-.062
.867	-.066	-.065	-.065	-.061	-.067	-.067	-.067
.900	-.082	-.088	-.083	-.081	-.088	-.085	-.079
.933	-.086	-.088	-.080	-.089	-.094	-.092	-.083
.967							
1.000	-.126	-.128	-.118	-.108	-.115	-.103	-.097

x/L	θ = 180	165	150	135	120	105	90
.033	.085	.078	.087	.098	.097	.104	.111
.067	.074	.071	.076	.089	.087	.091	.097
.100	.067	.064	.071	.082	.079	.086	.088
.133	.061	.058	.065	.074	.072	.080	.084
.167	.054	.048	.055	.064	.062	.067	.069
.200	.036	.032	.041	.048	.046	.050	.052
.233	.026	.025	.034	.041	.039	.041	.044
.267							
.300	.019	.013	.021	.028	.024	.027	.028
.333	.009	.007	.012	.019	.016	.019	.019
.367	.009	.006	.012	.018	.015	.016	.015
.400	.000	-.008	-.001	.005	.002	.004	.003
.433	-.009	-.016	-.010	-.004	-.006	-.005	-.004
.467	-.016	-.023	-.016	-.011	-.015	-.015	-.013
.500	-.020	-.028	-.019	-.016	-.019	-.019	-.017
.533	-.025	-.033	-.026	-.022	-.025	-.025	-.026
.567	-.031	-.037	-.030	-.029	-.027	-.030	-.031
.600	-.037	-.042	-.036	-.034	-.031	-.034	-.035
.633	-.036	-.044	-.039	-.039	-.033	-.032	-.017
.667	-.041	-.045	-.040	-.038	-.028	-.023	-.018
.700	-.044	-.048	-.041	-.037	-.035	-.039	-.037
.733	-.043	-.050	-.037	-.034	-.034	-.036	-.036
.767	-.040	-.047	-.036	-.036	-.035	-.041	-.049
.800	-.033	-.040	-.033	-.035	-.037	-.045	-.053
.833	-.033	-.034	-.030	-.036	-.041	-.053	-.062
.867							
.900	-.026	-.030	-.032	-.036	-.047	-.063	-.077
.933	-.021	-.027	-.028	-.033	-.044	-.060	-.076
.967	-.022	-.029	-.032	-.036	-.045	-.057	-.075
1.000	-.059	-.063	-.065	-.069	-.072	-.079	-.087

TABLE 3.- PRESSURE-COEFFICIENT DATA FOR THE FLAT PLATE

$$\left[M = 1.41\right]$$

$\epsilon = 0°$ $\quad \frac{2\beta y}{L(1-\epsilon\beta)} = .98$

$\frac{x}{L}$	ψ						
	0	15	30	45	60	75	90
.000	-.013	-.014	-.010	-.009	-.003	.003	.010
.038	-.013	-.015	-.005	-.009	-.001	-.002	.006
.077	-.009	-.011	-.003	-.003	.000	.006	.010
.115	-.010	-.012	-.007	-.006	-.001	.001	.006
.154	-.013	-.013	-.009	-.007	.000	.002	.005
.192	-.009	-.009	-.004	-.004	.002	.007	.006
.231	-.009	-.009	-.007	-.005	-.001	.005	.005
.269	-.013	-.010	-.005	-.003	.000	.005	.005
.308	-.010	-.010	-.005	-.003	.000	.007	.006
.346	-.010	-.009	-.002	.000	.002	.007	.008
.385	-.003	-.005	-.002	.000	.001	.005	.008
.423	-.001	-.002	.002	.000	.001	.005	.008
.462	.005	-.003	.005	.004	.005	.007	.010
.500	.006	.001	.006	.006	.005	.008	.009
.538	.009	.006	.008	.006	.005	.008	.013
.577	.009	.006	.008	.008	.007	.007	.012
.615	.013	.009	.011	.011	.008	.010	.006
.654	.009	.005	.007	.008	.006	.004	.005
.692	.012	.009	.012	.009	.009	.009	.009
.731	.044	.030	.011	.010	.006	.006	.006
.769	.086	.080	.028	.008	.003	.005	.002
.808	.081	.081	.081	.010	.007	.005	.004
.846	.076	.080	.087	.014	.008	.007	.004
.885	.081	.080	.087	.023	.010	.011	.008
.923	.079	.073	.082	.055	.010	.009	.008
.962	.073	.069	.080	.075	.010	.008	.011
1.000	.069	.067	.083	.081	.014	.009	.006

$\epsilon = 0°$ $\quad \frac{2\beta y}{L(1-\epsilon\beta)} = .86$

$\frac{x}{L}$	ψ						
	0	15	30	45	60	75	90
.000	-.015	-.014	-.011	-.008	-.003	.001	.005
.038	-.016	-.015	-.009	-.007	-.002	.001	.003
.077	-.011	-.011	-.007	-.004	.001	.004	.010
.115	-.011	-.011	-.007	-.004	.000	.002	.006
.154	-.014	-.012	-.007	-.004	-.001	.004	.004
.192	-.011	-.010	-.006	-.003	.001	.006	.005
.231	-.011	-.010	-.009	-.003	-.001	.004	.001
.269	-.015	-.009	-.006	.000	.001	.005	.002
.308	-.013	-.008	-.006	.000	.001	.004	.008
.346	-.013	-.008	-.004	.002	.002	.006	.006
.385	-.006	-.004	-.003	.001	.000	.004	.006
.423	-.005	-.004	.000	.002	.002	.006	.004
.462	-.003	.002	.004	.005	.003	.006	.005
.500	.003	.001	.006	.006	.005	.008	.005
.538	.005	.003	.008	.008	.005	.007	.003
.577	.005	.006	.007	.009	.007	.006	.005
.615	.009	.008	.011	.011	.009	.009	.005
.654	.025	.015	.007	.009	.006	.004	.001
.692	.081	.083	.052	.010	.008	.009	.004
.731	.083	.084	.086	.013	.007	.007	.000
.769	.084	.084	.086	.033	.005	.004	.001
.808	.081	.080	.085	.079	.005	.005	.002
.846	.077	.080	.085	.087	.007	.006	.007
.885	.075	.075	.086	.090	.012	.010	.007
.923	.069	.069	.080	.086	.010	.010	.004
.962	.063	.061	.079	.084	.011	.009	.001
1.000	.056	.056	.079	.087	.014	.010	.003

$\epsilon = 0°$ $\quad \frac{2\beta y}{L(1-\epsilon\beta)} = .73$

$\frac{x}{L}$	ψ						
	0	15	30	45	60	75	90
.000	-.013	-.010	-.013	-.007	-.001	-.001	.005
.038	-.012	-.010	-.011	-.007	-.001	-.003	.004
.077	-.011	-.006	-.006	-.002	.001	.003	.009
.115	-.009	-.009	-.009	-.004	.002	-.001	.006
.154	-.012	-.008	-.009	-.005	.003	.000	.007
.192	-.009	-.008	-.008	-.004	.002	.003	.007
.231	-.009	-.007	-.009	-.004	.001	.002	.004
.269	-.012	-.009	-.008	-.003	.004	.003	.005
.308	-.009	-.008	-.007	-.004	.002	.003	.004
.346	-.010	-.006	-.005	.000	.003	.005	.007
.385	-.004	-.002	-.004	.000	.005	.004	.007
.423	-.002	.000	-.002	.000	.003	.005	.006
.462	-.004	.004	.002	.003	.005	.005	.008
.500	.006	.007	.003	.007	.008	.009	.008
.538	.009	.008	.006	.008	.007	.006	.006
.577	.017	.016	.009	.009	.008	.007	.006
.615	.093	.089	.074	.013	.008	.007	.008
.654	.092	.092	.087	.050	.005	.005	.004
.692	.089	.094	.091	.084	.009	.010	.008
.731	.085	.089	.090	.088	.012	.005	.004
.769	.085	.087	.084	.089	.015	.005	.005
.808	.079	.082	.082	.089	.026	.007	.005
.846	.074	.077	.081	.089	.033	.007	.005
.885	.065	.072	.080	.086	.041	.011	.008
.923	.056	.062	.073	.084	.042	.008	.008
.962	.046	.052	.069	.077	.040	.008	.004
1.000	.038	.049	.068	.084	.041	.009	.008

$\epsilon = 0°$ $\quad \frac{2\beta y}{L(1-\epsilon\beta)} = .60$

$\frac{x}{L}$	ψ						
	0	15	30	45	60	75	90
.000	-.014	-.013	-.016	-.011	-.008	-.003	.003
.038	-.016	-.013	-.013	-.010	-.007	-.005	.003
.077	-.013	-.008	-.009	-.002	-.003	-.001	.005
.115	-.013	-.009	-.011	-.007	-.005	-.003	.006
.154	-.013	-.010	-.010	-.009	-.005	-.002	.005
.192	-.011	-.007	-.011	-.008	-.003	-.001	.001
.231	-.013	-.009	-.013	-.007	-.005	-.001	.001
.269	-.015	-.008	-.010	-.006	-.002	.000	.002
.308	-.013	-.008	-.011	-.006	-.004	.001	.000
.346	-.012	-.008	-.008	-.003	-.002	.002	.003
.385	-.006	-.003	-.006	-.001	-.003	.000	.005
.423	-.003	-.001	-.004	-.003	-.002	.002	.002
.462	-.002	.004	-.001	.002	.000	.002	.005
.500	.005	.009	.002	.006	.002	.005	.005
.538	.087	.090	.082	.064	.024	.007	.002
.577	.095	.100	.095	.090	.077	.013	.004
.615	.097	.101	.097	.097	.086	.017	.004
.654	.090	.093	.090	.092	.087	.009	.002
.692	.086	.094	.090	.091	.091	.011	.004
.731	.081	.087	.086	.089	.088	.003	.001
.769	.076	.081	.080	.084	.087	.002	.001
.808	.064	.070	.075	.082	.085	.003	.001
.846	.058	.063	.073	.083	.083	.003	.001
.885	.046	.058	.069	.083	.084	.005	.005
.923	.033	.047	.059	.078	.080	.005	.003
.962	.019	.032	.054	.078	.079	.004	.000
1.000	.011	.024	.051	.077	.080	.007	.002

TABLE 3.- PRESSURE-COEFFICIENT DATA FOR THE FLAT PLATE - Continued

$$\left[M = 1.41\right]$$

$\epsilon = 0°$ $\qquad \dfrac{2\beta y}{L(1-\epsilon\beta)} = .48$

$\frac{x}{L}$	ψ						
	0	15	30	45	60	75	90
.000	-.016	-.014	-.015	-.014	-.008	-.002	.001
.038	-.019	-.016	-.014	-.015	-.008	-.007	.000
.077	-.015	-.009	-.010	-.008	-.005	.000	.004
.115	-.014	-.012	-.011	-.010	-.005	-.001	.001
.154	-.016	-.013	-.012	-.010	-.005	-.003	-.002
.192	-.013	-.009	-.009	-.010	-.003	.003	.000
.231	-.012	-.010	-.011	-.009	-.005	.000	.001
.269	-.017	-.010	-.009	-.008	-.001	-.001	.002
.308	-.013	-.008	-.009	-.008	-.002	.000	.021
.346	-.013	-.007	-.006	-.005	-.001	.003	.071
.385	-.007	-.003	-.003	-.005	.000	.031	.085
.423	-.004	.000	-.001	-.001	.049	.083	.091
.462	.081	.082	.099	.083	.089	.093	.096
.500	.101	.107	.105	.101	.100	.103	.101
.538	.102	.104	.105	.102	.103	.103	.095
.577	.096	.101	.105	.101	.101	.099	.089
.615	.098	.099	.100	.099	.100	.101	.088
.654	.089	.090	.094	.090	.095	.093	.074
.692	.082	.086	.091	.088	.094	.090	.026
.731	.069	.075	.084	.085	.090	.088	.000
.769	.059	.063	.074	.081	.084	.079	-.004
.808	.053	.056	.068	.080	.081	.066	-.004
.846	.047	.055	.063	.078	.081	.033	-.001
.885	.030	.044	.061	.074	.084	.016	.003
.923	.016	.028	.054	.070	.078	.007	.000
.962	.003	.014	.049	.069	.077	.005	.002
1.000	-.006	.008	.047	.068	.077	.006	.003

$\epsilon = 0°$ $\qquad \dfrac{2\beta y}{L(1-\epsilon\beta)} = .35$

$\frac{x}{L}$	ψ						
	0	15	30	45	60	75	90
.000	-.018	-.011	-.018	-.013	-.010	-.005	.001
.038	-.017	-.011	-.017	-.012	-.010	-.005	.000
.077	-.015	-.009	-.013	-.007	-.007	-.002	.005
.115	-.015	-.012	-.015	-.010	-.007	-.002	.002
.154	-.015	-.009	-.015	-.008	-.008	-.004	.001
.192	-.013	-.007	-.012	-.007	-.004	.000	.010
.231	-.013	-.006	-.014	-.008	-.009	.000	.042
.269	-.016	-.007	-.011	-.005	-.007	.003	.079
.308	-.013	-.007	-.011	-.006	-.004	.056	.094
.346	-.013	-.003	-.007	-.003	.057	.092	.103
.385	.074	.084	.081	.082	.094	.102	.106
.423	.108	.112	.108	.105	.107	.109	.109
.462	.104	.118	.111	.111	.107	.111	.107
.500	.110	.116	.111	.113	.107	.111	.111
.538	.106	.110	.105	.106	.102	.106	.108
.577	.100	.106	.099	.101	.098	.103	.107
.615	.106	.108	.095	.099	.096	.103	.108
.654	.095	.102	.095	.090	.089	.096	.100
.692	.082	.090	.090	.089	.089	.096	.096
.731	.062	.073	.078	.083	.084	.093	.085
.769	.045	.056	.067	.078	.079	.088	.042
.808	.025	.037	.052	.076	.078	.084	.006
.846	.014	.024	.046	.079	.077	.079	.004
.885	-.008	.013	.039	.076	.079	.071	.003
.923	-.020	-.002	.026	.071	.074	.047	.002
.962	-.035	-.014	.019	.063	.073	.025	.002
1.000	-.045	-.020	.016	.066	.074	.015	.004

$\epsilon = 0°$ $\qquad \dfrac{2\beta y}{L(1-\epsilon\beta)} = .20$

$\frac{x}{L}$	ψ						
	0	15	30	45	60	75	90
.000	-.010	-.009	-.016	-.014	-.008	-.009	-.002
.038	-.013	-.009	-.014	-.013	-.007	-.011	-.001
.077	-.007	-.005	-.010	-.011	-.005	-.006	.005
.115	-.008	-.008	-.011	-.012	-.005	-.006	.005
.154	-.009	-.008	-.012	-.012	-.008	-.009	.028
.192	-.006	-.003	-.010	-.011	-.004	-.001	.067
.231	-.010	-.007	-.012	-.012	-.006	.024	.084
.269	-.008	-.006	-.009	-.007	.022	.078	.094
.308	.098	.087	.075	.069	.089	.098	.104
.346	.130	.130	.119	.107	.108	.106	.120
.385	.142	.140	.131	.118	.117	.118	.120
.423	.161	.154	.148	.134	.133	.129	.126
.462	.143	.153	.134	.139	.136	.130	.132
.500	.148	.145	.144	.138	.138	.138	.138
.538	.137	.136	.132	.130	.129	.131	.133
.577	.115	.117	.116	.116	.120	.121	.127
.615	.099	.100	.098	.103	.108	.116	.122
.654	.070	.074	.075	.082	.094	.105	.113
.692	.043	.052	.064	.076	.092	.101	.103
.731	.017	.027	.046	.069	.085	.097	.097
.769	-.012	.006	.034	.061	.080	.092	.086
.808	-.035	-.014	.022	.055	.078	.087	.066
.846	-.054	-.026	.015	.056	.077	.083	.027
.885	-.070	-.036	.012	.054	.079	.079	.006
.923	-.086	-.045	.003	.050	.073	.072	.001
.962	-.096	-.054	-.001	.045	.074	.059	-.004
1.000	-.097	-.058	-.002	.048	.072	.042	.002

TABLE 3.- PRESSURE-COEFFICIENT DATA FOR THE FLAT PLATE - Continued.

$$\left[M = 1.41\right]$$

$\epsilon = 3^\circ$ $\quad \frac{2\beta y}{L(1-\epsilon\beta)} = .90$

$\frac{x}{L}$	ψ						
	0	15	30	45	60	75	90
.000	-.014	-.014	-.010	-.009	-.006	.000	.008
.038	-.014	-.013	-.009	-.006	-.005	-.002	.005
.077	-.011	-.009	-.004	-.002	-.001	.002	.011
.115	-.011	-.011	-.006	-.004	-.001	.001	.007
.154	-.012	-.010	-.007	-.004	.001	.002	.008
.192	-.010	-.007	-.004	-.004	.001	.005	.009
.231	-.011	-.009	-.006	-.004	-.002	.003	.010
.269	-.013	-.010	-.005	-.003	.001	.002	.007
.308	-.010	-.008	-.004	-.001	.001	.004	.007
.346	-.009	-.006	-.002	.001	.002	.006	.011
.385	-.004	-.004	.000	.001	.002	.004	.012
.423	-.002	-.001	.002	.002	.002	.004	.010
.462	.001	.002	.005	.005	.004	.007	.012
.500	.004	.003	.008	.007	.005	.006	.014
.538	.008	.007	.009	.008	.006	.006	.009
.577	.009	.009	.011	.009	.008	.007	.011
.615	.011	.009	.013	.012	.008	.008	.012
.654	.011	.008	.010	.010	.007	.006	.009
.692	.066	.066	.015	.012	.010	.009	.012
.731	.075	.075	.068	.010	.008	.005	.007
.769	.073	.076	.078	.016	.008	.005	.008
.808	.069	.072	.078	.045	.008	.004	.005
.846	.069	.072	.078	.074	.008	.006	.006
.885	.069	.072	.078	.078	.012	.008	.010
.923	.063	.065	.073	.079	.009	.006	.010
.962	.058	.061	.073	.078	.011	.008	.011
1.000	.053	.052	.075	.079	.013	.009	.009

$\epsilon = 3^\circ$ $\quad \frac{2\beta y}{L(1-\epsilon\beta)} = .77$

$\frac{x}{L}$	ψ						
	0	15	30	45	60	75	90
.000	-.015	-.014	-.010	-.007	-.003	-.002	.008
.038	-.016	-.014	-.011	-.004	-.001	-.007	.010
.077	-.013	-.008	-.004	-.002	.003	-.003	.013
.115	-.012	-.012	-.005	-.004	-.001	-.001	.008
.154	-.013	-.011	-.005	-.003	.001	-.001	.012
.192	-.010	-.010	-.004	-.003	.001	.002	.007
.231	-.010	-.010	-.005	-.002	-.002	.000	.007
.269	-.015	-.010	-.004	-.001	.000	-.001	.008
.308	-.012	-.010	-.004	.001	.001	.000	.008
.346	-.011	-.007	-.002	.001	.003	.004	.010
.385	-.005	-.008	.001	.000	.001	.001	.009
.423	-.003	-.003	.003	.002	.001	.003	.007
.462	-.009	.002	.004	.004	.003	.003	.011
.500	.003	.003	.008	.008	.005	.006	.010
.538	.004	.005	.011	.008	.005	.007	.006
.577	.007	.007	.011	.010	.007	.006	.007
.615	.069	.064	.020	.013	.009	.007	.009
.654	.076	.075	.070	.014	.004	.004	.007
.692	.072	.077	.081	.066	.009	.006	.010
.731	.073	.073	.082	.074	.006	.002	.007
.769	.071	.073	.080	.079	.008	.003	.008
.808	.067	.069	.074	.080	.010	.003	.008
.846	.064	.067	.076	.091	.013	.003	.009
.885	.060	.064	.076	.082	.019	.008	.013
.923	.050	.055	.070	.078	.019	.005	.009
.962	.044	.047	.066	.074	.018	.004	.011
1.000	.036	.046	.067	.076	.023	.007	.011

$\epsilon = 3^\circ$ $\quad \frac{2\beta y}{L(1-\epsilon\beta)} = .64$

$\frac{x}{L}$	ψ						
	0	15	30	45	60	75	90
.000	-.017	-.017	-.013	-.024	-.005	-.001	.012
.038	-.017	-.018	-.012	-.011	-.004	-.002	.010
.077	-.013	-.014	-.009	-.018	-.002	.005	.012
.115	-.014	-.016	-.010	-.019	-.002	.002	.011
.154	-.015	-.015	-.013	-.020	-.005	.000	.011
.192	-.012	-.014	-.008	-.021	.000	.007	.009
.231	-.012	-.014	-.010	-.020	-.001	.004	.011
.269	-.019	-.013	-.008	-.018	.000	.005	.012
.308	-.013	-.012	-.008	-.019	.001	.006	.010
.346	-.012	-.011	-.006	-.016	.001	.008	.011
.385	-.008	-.008	-.004	-.015	.000	.005	.014
.423	-.005	-.008	-.002	-.016	.000	.006	.009
.462	-.010	-.001	.001	-.012	.004	.008	.011
.500	-.001	.001	.004	-.008	.006	.008	.013
.538	.063	.060	.025	.000	.007	.007	.013
.577	.077	.079	.076	.055	.032	.007	.010
.615	.084	.084	.085	.067	.067	.009	.010
.654	.075	.076	.080	.064	.069	.005	.008
.692	.071	.075	.080	.065	.075	.009	.012
.731	.066	.070	.075	.065	.075	.004	.004
.769	.067	.068	.070	.062	.076	.002	.005
.808	.058	.061	.068	.058	.075	.005	.006
.846	.052	.055	.068	.060	.075	.005	.008
.885	.046	.050	.065	.060	.076	.007	.010
.923	.035	.040	.058	.057	.072	.007	.014
.962	.023	.032	.053	.054	.072	.005	.013
1.000	.017	.024	.054	.056	.071	.008	.010

$\epsilon = 3^\circ$ $\quad \frac{2\beta y}{L(1-\epsilon\beta)} = .50$

$\frac{x}{L}$	ψ						
	0	15	30	45	60	75	90
.000	-.016	-.017	-.014	-.013	-.007	-.003	.006
.038	-.015	-.018	-.015	-.016	-.006	-.001	.003
.077	-.014	-.012	-.008	-.008	-.003	.003	.005
.115	-.014	-.013	-.010	-.012	-.005	.003	.006
.154	-.015	-.016	-.012	-.011	-.005	.002	.001
.192	-.011	-.012	-.009	-.010	-.001	.002	.003
.231	-.012	-.014	-.012	-.009	-.004	.002	.003
.269	-.015	-.015	-.009	-.008	-.003	.002	.004
.308	-.010	-.013	-.008	-.007	-.002	.003	.009
.346	-.011	-.012	-.005	-.006	-.002	.005	.032
.385	-.005	-.008	-.004	-.005	-.003	.009	.067
.423	-.003	-.008	-.002	-.006	.005	.060	.075
.462	.047	.040	.025	.048	.065	.067	.082
.500	.083	.079	.081	.079	.078	.084	.084
.538	.089	.086	.090	.087	.083	.085	.080
.577	.082	.082	.088	.086	.085	.086	.074
.615	.085	.081	.087	.085	.087	.086	.071
.654	.077	.074	.077	.077	.080	.081	.038
.692	.072	.069	.077	.077	.081	.079	.011
.731	.065	.063	.073	.074	.079	.071	.002
.769	.056	.053	.068	.072	.075	.063	.005
.808	.045	.046	.063	.069	.077	.037	.000
.846	.037	.042	.059	.071	.075	.018	.002
.885	.036	.035	.056	.070	.075	.011	.007
.923	.022	.026	.049	.066	.071	.007	.005
.962	.011	.019	.043	.062	.070	.006	.005
1.000	.004	.012	.042	.065	.070	.009	.004

TABLE 3.- PRESSURE-COEFFICIENT DATA FOR THE FLAT PLATE - Continued

$$\left[M = 1.41\right]$$

$\epsilon = 3^\circ$ $\qquad \dfrac{2\beta y}{L(1-\epsilon\beta)} = .37$

$\frac{x}{L}$	ψ						
	0	15	30	45	60	75	90
.000	-.014	-.017	-.015	-.010	-.007	-.008	.003
.038	-.015	-.021	-.017	-.009	-.006	-.007	.001
.077	-.012	-.016	-.009	-.005	-.004	-.002	.006
.115	-.011	-.015	-.011	-.006	-.004	-.003	.000
.154	-.011	-.015	-.012	-.007	-.005	-.003	-.002
.192	-.010	-.014	-.009	-.005	-.003	.000	.002
.231	-.009	-.013	-.011	-.008	-.005	-.002	.013
.269	-.014	-.013	-.009	-.003	-.003	-.001	.056
.308	-.011	-.012	-.009	-.004	-.003	.022	.076
.346	-.013	-.010	-.007	-.002	.016	.073	.085
.385	.019	.018	.019	.059	.075	.084	.089
.423	.084	.083	.083	.087	.087	.090	.092
.462	.085	.092	.095	.095	.092	.094	.095
.500	.095	.094	.095	.097	.095	.092	.094
.538	.089	.087	.091	.093	.091	.093	.093
.577	.084	.080	.086	.086	.086	.090	.092
.615	.082	.081	.084	.086	.086	.090	.092
.654	.071	.070	.074	.076	.079	.085	.086
.692	.073	.071	.074	.078	.082	.085	.076
.731	.060	.059	.068	.075	.077	.082	.062
.769	.045	.051	.063	.069	.076	.078	.012
.808	.028	.036	.058	.065	.075	.076	-.001
.846	.017	.024	.054	.069	.075	.068	-.001
.885	.002	.016	.051	.068	.078	.053	.002
.923	-.010	.003	.039	.065	.073	.027	.002
.962	-.015	-.010	.030	.065	.072	.012	-.002
1.000	-.025	-.015	.027	.067	.074	.008	-.001

$\epsilon = 3^\circ$ $\qquad \dfrac{2\beta y}{L(1-\epsilon\beta)} = .21$

$\frac{x}{L}$	ψ						
	0	15	30	45	60	75	90
.000	-.014	-.015	-.012	-.011	-.009	-.002	.004
.038	-.015	-.018	-.010	-.010	-.009	-.006	.003
.077	-.009	-.014	-.005	-.005	-.006	.002	.008
.115	-.012	-.015	-.007	-.007	-.007	.000	.011
.154	-.013	-.012	-.006	-.008	-.003	.002	.018
.192	-.011	-.011	-.005	-.007	-.005	.003	.049
.231	-.011	-.009	-.006	-.008	-.005	.014	.074
.269	-.013	-.011	-.003	-.005	.005	.066	.088
.308	.047	.032	.010	.029	.071	.091	.097
.346	.095	.097	.093	.092	.094	.100	.097
.385	.113	.113	.110	.104	.098	.100	.106
.423	.107	.109	.108	.103	.102	.110	.108
.462	.117	.114	.113	.108	.106	.111	.103
.500	.113	.114	.115	.113	.110	.114	.112
.538	.104	.104	.108	.108	.105	.111	.110
.577	.091	.092	.098	.099	.098	.106	.105
.615	.080	.080	.089	.092	.095	.106	.105
.654	.055	.056	.072	.080	.088	.098	.095
.692	.037	.045	.063	.077	.084	.096	.094
.731	.016	.025	.053	.070	.082	.092	.089
.769	-.003	.011	.043	.065	.078	.087	.078
.808	-.021	-.006	.033	.063	.077	.087	.053
.846	-.032	-.014	.028	.062	.077	.083	.017
.885	-.041	-.023	.024	.058	.076	.078	.007
.923	-.054	-.032	.014	.055	.074	.070	.002
.962	-.064	-.042	.007	.052	.071	.052	-.001
1.000	-.064	-.045	.008	.056	.076	.035	.001

TABLE 3.- PRESSURE-COEFFICIENT DATA FOR THE FLAT PLATE - Continued.

[M = 1.41]

$\epsilon = -3^\circ$ $\frac{2\beta y}{L(1-\epsilon\beta)} = .94$

x/L	ψ = 0	15	30	45	60	75	90
.000	-.014	-.014	-.011	-.003	-.004	.004	.007
.038	-.014	-.015	-.010	-.005	-.003	.004	.007
.077	-.011	-.010	-.006	.000	.001	.008	.011
.115	-.011	-.013	-.007	-.002	-.002	.008	.004
.154	-.009	-.013	-.007	-.002	-.002	.009	.004
.192	-.010	-.008	-.005	-.001	.000	.011	.008
.231	-.009	-.011	-.006	-.001	-.002	.013	.004
.269	-.013	-.010	-.005	.000	-.001	.012	.003
.308	-.011	-.009	-.005	.001	.000	.010	.005
.346	-.011	-.007	-.003	.002	.002	.009	.007
.385	-.005	-.003	.001	.003	.000	.008	.006
.423	-.005	-.003	.000	.004	.001	.011	.006
.462	-.009	.001	.004	.009	.004	.010	.008
.500	.001	.004	.008	.010	.005	.013	.008
.538	.004	.006	.009	.010	.006	.010	.005
.577	.005	.007	.010	.010	.008	.011	.006
.615	.011	.009	.012	.012	.010	.014	.006
.654	.008	.005	.009	.011	.005	.007	.003
.692	.010	.012	.012	.012	.010	.011	.006
.731	.077	.022	.011	.012	.008	.011	.005
.769	.096	.095	.021	.012	.007	.008	.002
.808	.090	.092	.093	.012	.007	.007	.000
.846	.087	.093	.099	.017	.009	.008	.002
.885	.093	.093	.099	.028	.014	.011	.007
.923	.088	.088	.094	.063	.011	.010	.005
.962	.083	.081	.092	.092	.012	.010	.000
1.000	.076	.076	.093	.094	.014	.012	.006

$\epsilon = -3^\circ$ $\frac{2\beta y}{L(1-\epsilon\beta)} = .81$

x/L	ψ = 0	15	30	45	60	75	90
.000	-.019	-.015	-.007	-.006	-.004	-.001	.009
.038	-.021	-.019	-.007	-.005	-.002	-.003	.006
.077	-.018	-.012	-.002	.000	.000	.007	.013
.115	-.019	-.016	-.005	.000	-.003	.005	.009
.154	-.017	-.015	-.003	-.003	-.002	.004	.004
.192	-.014	-.010	-.003	-.002	.002	.009	.007
.231	-.014	-.013	-.002	-.002	-.002	.008	.006
.269	-.016	-.012	-.003	-.001	.000	.006	.010
.308	-.015	-.011	-.001	.001	.000	.009	.009
.346	-.014	-.008	.000	.002	.001	.010	.009
.385	-.007	-.007	.003	.004	.000	.009	.008
.423	-.006	-.004	.005	.004	.000	.007	.006
.462	-.009	-.013	.008	.006	.004	.009	.009
.500	-.001	.000	.010	.010	.004	.010	.009
.538	.002	.003	.012	.012	.004	.008	.009
.577	.004	.005	.014	.013	.005	.009	.007
.615	.008	.006	.016	.014	.006	.013	.005
.654	.033	.014	.010	.009	.003	.011	.004
.692	.090	.093	.039	.013	.008	.013	.007
.731	.093	.094	.100	.014	.006	.008	.002
.769	.097	.093	.102	.036	.006	.009	.004
.808	.087	.088	.101	.095	.007	.009	.001
.846	.086	.088	.102	.102	.007	.009	.004
.885	.082	.083	.102	.101	.010	.011	.007
.923	.072	.075	.093	.099	.008	.009	.005
.962	.062	.064	.091	.098	.010	.011	.007
1.000	.055	.057	.090	.098	.014	.013	.005

$\epsilon = -3^\circ$ $\frac{2\beta y}{L(1-\epsilon\beta)} = .70$

x/L	ψ = 0	15	30	45	60	75	90
.000	-.016	-.017	-.012	-.008	-.002	-.001	.007
.038	-.018	-.017	-.011	-.010	-.001	-.002	.005
.077	-.015	-.015	-.005	-.003	.003	.003	.008
.115	-.015	-.014	-.008	-.003	.001	-.001	.006
.154	-.015	-.017	-.008	-.006	.001	.000	.006
.192	-.014	-.012	-.005	-.005	.004	.002	.005
.231	-.012	-.013	-.007	-.005	.003	.002	.003
.269	-.015	-.013	-.005	-.002	.004	.001	.002
.308	-.013	-.011	-.005	-.003	.003	.002	.004
.346	-.013	-.011	-.002	.000	.005	.006	.007
.385	-.006	-.008	-.001	.001	.004	.002	.006
.423	-.003	-.004	.000	.001	.005	.002	.007
.462	-.006	-.011	.003	.006	.008	.005	.006
.500	.002	-.001	.006	.007	.010	.007	.005
.538	.004	.003	.008	.009	.009	.009	.005
.577	.011	.007	.009	.010	.009	.005	.005
.615	.104	.101	.043	.013	.013	.008	.005
.654	.100	.102	.102	.056	.007	.006	.003
.692	.097	.099	.105	.098	.013	.008	.007
.731	.097	.097	.105	.103	.013	.006	.004
.769	.095	.094	.101	.102	.020	.005	.003
.808	.088	.087	.099	.102	.028	.005	.004
.846	.080	.083	.098	.102	.038	.005	.004
.885	.071	.074	.095	.099	.046	.008	.008
.923	.059	.065	.085	.094	.045	.007	.007
.962	.044	.051	.079	.092	.044	.007	.007
1.000	.034	.039	.077	.093	.043	.008	.007

$\epsilon = -3^\circ$ $\frac{2\beta y}{L(1-\epsilon\beta)} = .54$

x/L	ψ = 0	15	30	45	60	75	90
.000	-.019	-.014	-.014	-.015	-.012	-.002	.000
.038	-.020	-.014	-.016	-.016	-.011	-.001	.000
.077	-.016	-.010	-.013	-.010	-.009	.000	.005
.115	-.018	-.011	-.011	-.012	-.011	-.001	.000
.154	-.020	-.011	-.014	-.013	-.008	.001	.000
.192	-.015	-.008	-.009	-.010	-.007	.001	.000
.231	-.017	-.010	-.011	-.011	-.009	.002	.000
.269	-.021	-.008	-.009	-.009	-.006	.001	.005
.308	-.017	-.008	-.009	-.009	-.006	.000	.023
.346	-.017	-.006	-.007	-.008	-.006	.003	.079
.385	-.011	-.003	-.006	-.005	-.006	.026	.102
.423	-.007	.000	-.004	-.001	.037	.098	.112
.462	.085	.092	.088	.098	.099	.102	.116
.500	.117	.126	.119	.119	.116	.122	.121
.538	.119	.124	.122	.120	.115	.121	.116
.577	.112	.121	.119	.116	.113	.121	.112
.615	.115	.122	.116	.116	.113	.120	.107
.654	.103	.110	.108	.106	.104	.112	.088
.692	.095	.103	.103	.104	.103	.107	.023
.731	.080	.090	.096	.100	.099	.101	.005
.769	.090	.083	.084	.094	.093	.089	.000
.808	.069	.083	.074	.086	.090	.066	.000
.846	.050	.065	.071	.087	.087	.033	.000
.885	.031	.050	.070	.083	.089	.017	.005
.923	.014	.032	.063	.077	.084	.008	.000
.962	-.004	.017	.054	.070	.081	.005	.000
1.000	-.019	.006	.047	.074	.080	.008	.005

TABLE 3.- PRESSURE-COEFFICIENT DATA FOR THE FLAT PLATE - Continued

$$\left[M = 1.41\right]$$

$\epsilon = -3^\circ$ $\qquad \dfrac{2\beta y}{L(1-\epsilon\beta)} = .50$

$\frac{x}{L}$	ψ						
	0	15	30	45	60	75	90
.000	-.021	-.013	-.013	-.012	-.006	.001	.002
.038	-.022	-.012	-.013	-.010	-.007	-.001	-.001
.077	-.018	-.010	-.009	-.006	-.001	.005	.003
.115	-.018	-.009	-.008	-.006	-.004	.002	.001
.154	-.021	-.011	-.011	-.009	-.004	.002	.000
.192	-.016	-.008	-.009	-.009	-.002	.003	.002
.231	-.018	-.008	-.009	-.007	-.004	.005	-.001
.269	-.020	-.006	-.007	-.007	-.001	.003	.001
.308	-.017	-.005	-.008	-.005	-.001	.005	.003
.346	-.017	-.005	-.006	-.003	.001	.006	.004
.385	-.011	-.002	-.004	-.002	-.002	.004	.003
.423	-.009	.000	-.004	-.002	-.001	.006	.003
.462	-.007	-.002	.001	.001	.000	.006	.006
.500	.000	.006	.003	.005	.004	.007	.007
.538	.098	.104	.088	.057	.023	.011	.003
.577	.107	.115	.109	.105	.090	.015	.003
.615	.111	.117	.114	.112	.104	.019	.005
.654	.102	.110	.108	.108	.101	.014	.002
.692	.097	.105	.104	.105	.103	.015	.004
.731	.092	.102	.101	.104	.102	.007	.002
.769	.082	.093	.095	.100	.096	.007	.002
.808	.071	.084	.086	.097	.097	.009	.002
.846	.059	.074	.083	.096	.093	.009	.003
.885	.047	.064	.076	.094	.093	.009	.006
.923	.028	.050	.067	.089	.087	.009	.005
.962	.027	.033	.060	.086	.086	.010	.003
1.000	.023	.028	.055	.085	.086	.011	.007

$\epsilon = -3^\circ$ $\qquad \dfrac{2\beta y}{L(1-\epsilon\beta)} = .39$

$\frac{x}{L}$	ψ						
	0	15	30	45	60	75	90
.000	-.017	-.007	-.014	-.013	-.014	-.001	.000
.038	-.018	-.012	-.011	-.012	-.010	-.002	-.005
.077	-.016	-.006	-.008	-.008	-.009	.003	.000
.115	-.017	-.007	-.009	-.009	-.010	-.001	.000
.154	-.016	-.009	-.009	-.009	-.012	.002	-.005
.192	-.015	-.004	-.007	-.008	-.008	.004	.000
.231	-.014	-.005	-.009	-.008	-.010	.007	.005
.269	-.019	-.004	-.007	-.007	-.010	.002	.042
.308	-.015	-.006	-.007	-.005	-.008	.005	.093
.346	-.014	-.003	-.004	-.004	-.006	.061	.102
.385	-.009	-.001	-.003	.002	.072	.109	.116
.423	.094	.107	.088	.105	.108	.123	.121
.462	.117	.129	.124	.120	.118	.128	.121
.500	.126	.138	.132	.132	.125	.134	.135
.538	.123	.134	.127	.129	.120	.132	.130
.577	.117	.128	.123	.122	.116	.128	.121
.615	.117	.124	.119	.119	.115	.127	.116
.654	.102	.113	.108	.110	.103	.117	.112
.692	.107	.117	.103	.106	.102	.113	.096
.731	.091	.104	.095	.101	.096	.108	.047
.769	.072	.085	.095	.093	.092	.099	.005
.808	.048	.063	.087	.088	.086	.093	.000
.846	.030	.047	.075	.089	.087	.079	-.005
.885	.014	.033	.065	.085	.087	.049	.005
.923	-.007	.020	.050	.081	.080	.026	.000
.962	-.027	.004	.041	.079	.081	.015	-.005
1.000	-.040	-.008	.036	.080	.080	.011	.005

TABLE 3.- PRESSURE-COEFFICIENT DATA FOR THE FLAT PLATE - Continued

$$\left[M = 2.01\right]$$

$\epsilon = 0°$ $\quad \frac{2\beta y}{L(1-\epsilon\beta)} = 3.80$

$\frac{x}{L}$	ψ = 0	15	30	45	60	75	90
.000	.005	.004	.006	.000	-.002	.001	.007
.038	.003	.003	.003	.000	-.004	-.002	.002
.077	.003	.005	.005	.001	-.003	.001	.002
.115	.004	.005	.007	.002	-.002	.001	.003
.154	.003	.003	.005	.002	-.003	.001	.006
.192	.003	.004	.009	.003	-.001	.004	.005
.231	.005	.006	.009	.006	.004	.005	.006
.269	.003	.004	.009	.000	.000	.004	.003
.308	.002	.004	.009	.003	.002	.005	.007
.346	.003	.007	.012	.005	.000	.005	.007
.385	.002	.003	.010	.004	.001	.005	.007
.423	.006	.005	.010	.004	.000	.005	.005
.462	.003	.004	.011	.005	.000	.008	.006
.500	.007	.006	.014	.006	.002	.007	.006
.538	.008	.007	.013	.006	.001	.007	.006
.577	.008	.005	.011	.004	.001	.007	.003
.615	.005	.005	.012	.005	.000	.006	.004
.654	.005	.002	.008	.002	-.003	.003	.000
.692	.007	.003	.012	.004	.000	.006	.005
.731	.007	.002	.009	.001	-.002	.005	.003
.769	.006	.002	.011	.002	-.002	.003	.001
.808	.005	.003	.008	-.002	-.003	.003	.003
.846	.005	.004	.012	.003	-.001	.005	.007
.885	.007	.004	.011	.003	-.001	.006	.004
.923	.007	.000	.011	.002	-.001	.005	.002
.962	.007	.002	.011	.003	.001	.006	.007
1.000	.005	.003	.012	.004	.001	.007	.006

$\epsilon = 0°$ $\quad \frac{2\beta y}{L(1-\epsilon\beta)} = .98$

$\frac{x}{L}$	ψ = 0	15	30	45	60	75	90
.000	.007	.009	-.001	.000	.002	.003	.008
.038	.004	.010	-.003	-.002	-.004	.000	.004
.077	.008	.012	-.001	.000	.002	.000	.006
.115	.006	.008	.000	.001	.003	.002	.006
.154	.006	.006	.002	.003	-.002	.004	.007
.192	.007	.009	.002	.001	.002	.005	.007
.231	.009	.011	.003	.006	.007	.006	.008
.269	.007	.011	.002	.000	.003	.003	.006
.308	.006	.012	.003	.004	.005	.006	.007
.346	.008	.011	.004	.006	.005	.006	.008
.385	.008	.010	.004	.004	.005	.005	.008
.423	.007	.010	.002	.004	.003	.005	.007
.462	.009	.011	.003	.005	.002	.005	.007
.500	.009	.011	.006	.005	.006	.006	.008
.538	.011	.010	.006	.005	.005	.006	.008
.577	.009	.009	.003	.004	.004	.005	.005
.615	.010	.009	.004	.006	.003	.004	.005
.654	.009	.007	.001	.002	-.002	.003	.004
.692	.009	.009	.004	.004	.002	.005	.006
.731	.033	.009	.002	.001	-.001	.004	.008
.769	.082	.077	.001	.000	.000	.001	.004
.808	.077	.077	.000	-.002	-.004	.002	.005
.846	.076	.076	.054	.002	.002	.004	.007
.885	.073	.072	.067	.002	.001	.005	.005
.923	.068	.066	.065	-.002	.002	.004	.004
.962	.060	.061	.061	.002	.001	.004	.007
1.000	.053	.059	.061	.004	.003	.006	.007

$\epsilon = 0°$ $\quad \frac{2\beta y}{L(1-\epsilon\beta)} = .86$

$\frac{x}{L}$	ψ = 0	15	30	45	60	75	90
.000	.004	.010	-.001	.002	.003	.002	.006
.038	.001	.009	-.001	.000	-.001	.003	.002
.077	.002	.010	.001	.003	.002	.004	.003
.115	.004	.010	.001	.004	.003	.003	.005
.154	.002	.010	.001	.003	.002	.006	.006
.192	.003	.011	.003	.005	.003	.004	.006
.231	.006	.012	.005	.008	.009	.007	.008
.269	.002	.010	.004	.002	.004	.003	.005
.308	.004	.011	.004	.005	.006	.006	.007
.346	.003	.012	.005	.006	.006	.007	.008
.385	.004	.011	.004	.005	.004	.006	.008
.423	.002	.011	.003	.004	.004	.003	.007
.462	-.004	.011	.005	.004	.004	.003	.007
.500	.004	.012	.005	.006	.006	.005	.007
.538	.007	.012	.005	.005	.005	.004	.008
.577	.006	.012	.004	.005	.004	.004	.006
.615	.006	.012	.004	.005	.003	.003	.006
.654	.006	.008	.002	.001	-.001	.001	.003
.692	.083	.084	.004	.005	.003	.005	.006
.731	.076	.087	.038	.001	-.002	.003	.005
.769	.076	.083	.070	.001	-.001	.000	.005
.808	.071	.078	.067	-.002	-.004	.001	.005
.846	.070	.077	.070	.002	.001	.004	.008
.885	.062	.072	.058	.001	.001	.003	.006
.923	.054	.064	.063	.000	.001	.003	.005
.962	.043	.058	.063	.002	.003	.004	.007
1.000	.043	.050	.063	.003	.004	.005	.008

$\epsilon = 0°$ $\quad \frac{2\beta y}{L(1-\epsilon\beta)} = .73$

$\frac{x}{L}$	ψ = 0	15	30	45	60	75	90
.000	.004	.010	-.002	.003	.002	.003	.006
.038	.004	.011	-.002	.000	.001	.003	.001
.077	.004	.013	.003	.002	.001	.003	.004
.115	-.001	.010	.002	.004	.002	.005	.003
.154	.001	.010	.003	.002	.003	.004	.007
.192	.004	.011	.005	.004	.003	.005	.005
.231	.005	.011	.005	.009	.007	.006	.008
.269	-.001	.009	.003	.003	.004	.003	.003
.308	.004	.012	.005	.006	.005	.007	.006
.346	.003	.012	.006	.007	.005	.008	.007
.385	.004	.011	.005	.007	.005	.005	.009
.423	.002	.010	.004	.006	.003	.004	.004
.462	.002	.011	.005	.007	.003	.006	.006
.500	.006	.011	.006	.007	.005	.006	.007
.538	.006	.012	.006	.007	.005	.006	.007
.577	.005	.011	.004	.006	.004	.004	.005
.615	.087	.091	.020	.007	.003	.005	.006
.654	.088	.094	.078	.004	-.001	.001	.002
.692	.083	.091	.083	.009	.002	.004	.007
.731	.076	.086	.079	.019	-.001	.003	.006
.769	.073	.083	.075	.030	-.001	.001	.003
.808	.065	.076	.069	.026	-.003	.003	.004
.846	.059	.071	.070	.028	.001	.004	.007
.885	.048	.062	.066	.022	.002	.004	.005
.923	.035	.053	.063	.013	.000	.003	.003
.962	.025	.046	.063	.010	.001	.005	.005
1.000	.016	.039	.057	.013	.002	.005	.006

TABLE 3.- PRESSURE-COEFFICIENT DATA FOR THE FLAT PLATE - Continued

$$\left[M = 2.01\right]$$

$\epsilon = 0°$ $\quad \frac{2\beta y}{L(1-\epsilon\beta)} = .60$

$\frac{x}{L}$	ψ						
	0	15	30	45	60	75	90
.000	.008	.010	-.001	.003	.001	.006	.007
.038	.004	.012	-.002	.000	-.002	.006	.004
.077	.009	.012	-.001	.003	.003	.007	.004
.115	.004	.010	.001	.002	.002	.008	.003
.154	.007	.012	.003	.003	.000	.010	.007
.192	.008	.012	.004	.002	.002	.009	.005
.231	.009	.012	.005	.008	.008	.011	.008
.269	.006	.011	.002	.002	.004	.009	.004
.308	.005	.011	.004	.004	.005	.011	.007
.346	.006	.012	.006	.005	.005	.010	.009
.385	.007	.013	.005	.004	.005	.010	.008
.423	.008	.011	.005	.003	.003	.007	.005
.462	.005	.013	.005	.004	.004	.008	.008
.500	.008	.014	.007	.005	.006	.009	.007
.538	.092	.085	.074	.038	.005	.009	.008
.577	.106	.103	.098	.086	.021	.007	.005
.615	.097	.102	.098	.091	.031	.008	.006
.654	.089	.095	.086	.081	.014	.006	.001
.692	.085	.092	.086	.082	.007	.009	.007
.731	.075	.084	.079	.074	.001	.007	.005
.769	.066	.077	.077	.072	.000	.005	.004
.808	.054	.070	.071	.066	-.001	.006	.004
.846	.046	.061	.070	.069	.002	.008	.007
.885	.036	.054	.065	.065	.001	.008	.008
.923	.022	.041	.059	.059	.001	.006	.004
.962	.012	.035	.056	.053	.003	.008	.005
1.000	.020	.027	.053	.048	.006	.009	.006

$\epsilon = 0°$ $\quad \frac{2\beta y}{L(1-\epsilon\beta)} = .48$

$\frac{x}{L}$	ψ						
	0	15	30	45	60	75	90
.000	.003	.008	.004	-.002	.000	.005	.009
.038	.001	.006	.000	-.005	-.001	.006	.003
.077	.003	.008	.002	-.002	.001	.005	.005
.115	.002	.011	.004	.000	-.001	.006	.006
.154	.002	.011	.003	.003	-.001	.004	.006
.192	.004	.011	.006	-.001	.000	.007	.007
.231	.005	.012	.007	.005	.006	.009	.009
.269	.001	.011	.004	.001	.001	.006	.006
.308	.002	.011	.006	.003	.003	.008	.008
.346	.004	.011	.007	.003	.003	.008	.009
.385	.003	.010	.005	.003	.002	.008	.043
.423	.005	.010	.004	.001	.005	.082	.093
.462	.086	.092	.091	.091	.093	.103	.103
.500	.111	.113	.111	.107	.106	.112	.110
.538	.109	.111	.108	.104	.104	.110	.104
.577	.099	.104	.103	.097	.100	.102	.085
.615	.095	.099	.096	.095	.094	.092	.009
.654	.087	.090	.086	.083	.082	.051	.004
.692	.077	.083	.083	.083	.078	.010	.009
.731	.062	.071	.076	.075	.064	.005	.007
.769	.053	.062	.070	.072	.034	.003	.004
.808	.063	.053	.062	.066	.003	.004	.005
.846	.049	.065	.062	.067	.003	.007	.008
.885	.032	.053	.056	.064	.000	.006	.007
.923	.016	.038	.050	.058	.001	.006	.004
.962	.002	.028	.048	.053	.003	.007	.007
1.000	-.018	.019	.047	.058	.005	.008	.008

$\epsilon = 0°$ $\quad \frac{2\beta y}{L(1-\epsilon\beta)} = .35$

$\frac{x}{L}$	ψ						
	0	15	30	45	60	75	90
.000	.004	.007	-.002	.000	.001	.008	.004
.038	.004	.006	-.001	-.004	-.003	.003	.003
.077	.007	.009	.003	-.001	.002	.006	.004
.115	.006	.008	.003	.003	.002	.007	.001
.154	.006	.006	.002	.005	-.001	.006	.005
.192	.006	.007	.005	.002	.001	.008	.004
.231	.007	.009	.006	.008	.006	.010	.006
.269	.003	.007	.003	.001	.002	.006	.003
.308	.006	.008	.007	.003	.004	.010	.011
.346	.005	.009	.006	.004	.003	.018	.082
.385	.006	.061	.040	.071	.083	.098	.098
.423	.111	.119	.114	.110	.109	.111	.107
.462	.113	.126	.123	.115	.114	.119	.111
.500	.122	.118	.120	.115	.114	.120	.116
.538	.110	.109	.112	.107	.109	.114	.113
.577	.102	.102	.102	.099	.102	.108	.108
.615	.090	.103	.095	.095	.095	.102	.094
.654	.109	.115	.083	.084	.084	.089	.049
.692	.107	.100	.093	.081	.083	.073	.005
.731	.083	.081	.086	.074	.076	.022	.004
.769	.061	.064	.081	.070	.066	.003	.001
.808	.038	.045	.072	.067	.049	.006	.002
.846	.027	.036	.071	.067	.026	.008	.005
.885	.010	.029	.064	.064	.009	.006	.004
.923	-.008	.012	.057	.060	.003	.005	.002
.962	-.030	.003	.053	.058	.004	.010	.004
1.000	-.046	-.009	.050	.058	.005	.010	.006

TABLE 3.- PRESSURE-COEFFICIENT DATA FOR THE FLAT PLATE - Continued

[M = 2.01]

$\epsilon = 3^\circ$ $\quad \frac{2\beta y}{L(1-\epsilon\beta)} = 4.10$

x/L	ψ = 0	15	30	45	60	75	90
.000	.010	.003	.005	.005	.002	.009	-.010
.038	.011	.000	.002	.003	-.001	.009	-.010
.077	.012	.002	.004	.006	.002	.008	-.015
.115	.011	.003	.005	.006	.004	.011	-.010
.154	.013	.001	.004	.007	.000	.008	-.010
.192	.010	.002	.008	.008	.004	.011	-.010
.231	.010	.004	.009	.009	.008	.011	-.010
.269	.010	.002	.005	.005	.003	.008	-.010
.308	.008	.003	.008	.008	.006	.012	-.010
.346	.009	.004	.010	.009	.005	.012	-.010
.385	.010	.003	.009	.008	.005	.012	-.010
.423	.011	.002	.009	.009	.004	.010	-.010
.462	.012	.003	.011	.010	.003	.012	-.010
.500	.013	.003	.011	.010	.005	.011	-.010
.538	.014	.003	.010	.011	.005	.011	-.010
.577	.011	.003	.008	.008	.004	.011	-.015
.615	.014	.002	.009	.009	.004	.010	-.010
.654	.011	.000	.008	.007	.003	.005	-.010
.692	.013	.003	.009	.009	.003	.009	-.010
.731	.012	.001	.009	.007	.002	.008	-.010
.769	.011	.001	.009	.006	.001	.006	-.010
.808	.012	.000	.005	.005	-.001	.004	-.010
.846	.012	.001	.008	.008	.002	.008	-.010
.885	.013	.001	.007	.007	.002	.008	-.010
.923	.012	-.002	.005	.006	.000	.006	-.010
.962	.011	.001	.007	.007	-.001	.008	-.010
1.000	.013	.001	.007	.009	.006	.009	-.010

$\epsilon = 3^\circ$ $\quad \frac{2\beta y}{L(1-\epsilon\beta)} = .94$

x/L	ψ = 0	15	30	45	60	75	90
.000	.008	.002	.007	.005	.003	.004	.005
.038	.008	.000	.005	.004	-.001	.002	-.001
.077	.009	.003	.007	.007	.000	.004	.000
.115	.007	.003	.006	.006	.002	.006	.001
.154	.005	.003	.007	.007	-.001	.006	.003
.192	.007	.004	.009	.008	.003	.007	.004
.231	.010	.005	.009	.010	.007	.008	.004
.269	.006	.004	.007	.004	.002	.006	.002
.308	.008	.004	.009	.008	.005	.009	.004
.346	.006	.004	.010	.009	.004	.010	.006
.385	.006	.004	.010	.008	.004	.009	.004
.423	.005	.003	.010	.008	.002	.006	.002
.462	.006	.004	.010	.009	.004	.008	.004
.500	.008	.005	.010	.009	.004	.009	.003
.538	.010	.004	.010	.008	.005	.008	.004
.577	.009	.003	.009	.007	.004	.008	.002
.615	.010	.004	.010	.008	.004	.008	.002
.654	.006	.002	.007	.004	.000	.006	-.001
.692	.063	.016	.010	.008	.004	.009	.003
.731	.068	.056	.010	.006	.001	.006	.004
.769	.064	.060	.049	.004	-.002	.004	.003
.808	.056	.054	.055	.003	.000	.004	.003
.846	.058	.053	.062	.006	.002	.009	.006
.885	.057	.052	.063	.004	.002	.008	.004
.923	.046	.040	.057	.004	.000	.006	.002
.962	.041	.039	.052	.007	-.001	.009	.004
1.000	.035	.035	.052	.006	.004	.010	.004

$\epsilon = 3^\circ$ $\quad \frac{2\beta y}{L(1-\epsilon\beta)} = .80$

x/L	ψ = 0	15	30	45	60	75	90
.000	.008	-.001	.002	.004	.008	.004	.006
.038	.005	-.004	.002	.001	.005	.005	.001
.077	.008	.000	.003	.006	.009	.007	.002
.115	.004	.000	.003	.005	.008	.007	.002
.154	.003	-.001	.004	.004	.007	.008	.005
.192	.006	.001	.005	.006	.009	.007	.003
.231	.010	.003	.006	.010	.014	.010	.004
.269	.005	.000	.004	.005	.009	.007	.003
.308	.006	.001	.007	.009	.011	.010	.005
.346	.006	.002	.008	.009	.011	.010	.007
.385	.008	.001	.008	.008	.010	.010	.007
.423	.008	.002	.006	.007	.008	.006	.003
.462	.008	.001	.006	.008	.009	.009	.004
.500	.011	.002	.008	.009	.010	.009	.004
.538	.009	.002	.008	.008	.010	.008	.005
.577	.009	.002	.007	.008	.009	.007	.004
.615	.051	.015	.007	.008	.009	.008	.003
.654	.071	.060	.042	.004	.006	.003	.001
.692	.073	.065	.064	.008	.007	.009	.004
.731	.063	.057	.063	.008	.006	.005	.004
.769	.058	.056	.064	.007	.005	.003	.002
.808	.053	.049	.056	.006	.003	.004	.003
.846	.052	.050	.061	.009	.007	.009	.004
.885	.045	.045	.057	.007	.007	.007	.004
.923	.036	.036	.052	.005	.006	.006	.002
.962	.029	.032	.052	.008	.009	.008	.004
1.000	.023	.026	.049	.010	.011	.011	.004

$\epsilon = 3^\circ$ $\quad \frac{2\beta y}{L(1-\epsilon\beta)} = .66$

x/L	ψ = 0	15	30	45	60	75	90
.000	.006	.001	.005	.007	.007	.004	.005
.038	.003	-.001	.001	.010	.007	.006	.001
.077	.007	.003	.004	.011	.009	.004	-.001
.115	.004	.001	.005	.008	.008	.005	.001
.154	.003	.002	.004	.009	.008	.005	.002
.192	.007	.003	.007	.007	.008	.006	.005
.231	.008	.003	.008	.013	.015	.011	.005
.269	.003	.001	.004	.005	.010	.005	-.001
.308	.005	.001	.006	.010	.012	.009	.003
.346	.006	.003	.008	.011	.011	.009	.007
.385	.007	.002	.006	.010	.011	.010	.005
.423	.005	.002	.006	.008	.009	.006	.003
.462	.006	.003	.007	.007	.010	.010	.006
.500	.008	.003	.008	.010	.012	.008	.005
.538	.031	.005	.008	.008	.010	.007	.005
.577	.076	.068	.066	.035	.010	.008	.004
.615	.079	.073	.077	.064	.010	.008	.005
.654	.071	.063	.069	.063	.006	.005	.001
.692	.066	.063	.068	.069	.010	.009	.004
.731	.055	.056	.064	.063	.007	.007	.002
.769	.053	.053	.062	.060	.005	.005	.004
.808	.043	.048	.057	.056	.004	.006	.003
.846	.041	.045	.058	.060	.009	.009	.006
.885	.034	.038	.054	.055	.008	.007	.002
.923	.023	.029	.051	.042	.008	.007	.003
.962	.013	.026	.051	.031	.007	.012	.005
1.000	-.002	.019	.047	.024	.011	.010	.005

TABLE 3.- PRESSURE-COEFFICIENT DATA FOR THE FLAT PLATE - Continued

$$\left[M = 2.01\right]$$

$\epsilon = 3^\circ$ $\qquad \dfrac{2\beta y}{L(1-\epsilon\beta)} = .52$

$\frac{x}{L}$	ψ						
	0	15	30	45	60	75	90
.000	.002	.002	.007	.003	.006	.002	.002
.038	.003	-.001	.004	.002	.003	.001	.002
.077	.006	.001	.008	.004	.004	.002	-.001
.115	.004	.001	.005	.005	.005	.004	.001
.154	.003	-.001	.007	.006	.005	.005	.004
.192	.005	.004	.008	.005	.006	.004	.004
.231	.009	.004	.009	.010	.011	.008	.004
.269	.002	.001	.006	.004	.006	.004	.001
.308	.005	.003	.008	.006	.009	.007	.004
.346	.006	.004	.010	.008	.008	.008	.006
.385	.006	.001	.009	.007	.009	.007	.009
.423	.006	.002	.008	.005	.006	.012	.063
.462	.004	.004	.025	.044	.057	.068	.070
.500	.078	.073	.082	.078	.080	.080	.074
.538	.086	.080	.087	.080	.083	.078	.073
.577	.080	.073	.083	.079	.081	.071	.034
.615	.072	.069	.080	.080	.077	.058	.004
.654	.064	.062	.071	.070	.066	.006	.001
.692	.061	.057	.069	.073	.062	.007	.007
.731	.052	.052	.064	.066	.038	.003	.005
.769	.044	.044	.060	.062	.013	.002	.001
.808	.034	.037	.056	.057	.004	.003	.003
.846	.029	.033	.057	.063	.007	.007	.006
.885	.019	.029	.053	.061	.004	.006	.003
.923	.020	.018	.049	.055	.004	.005	.002
.962	.014	.013	.049	.053	.005	.009	.002
1.000	.000	.017	.046	.054	.010	.010	.003

$\epsilon = 3^\circ$ $\qquad \dfrac{2\beta y}{L(1-\epsilon\beta)} = .39$

$\frac{x}{L}$	ψ						
	0	15	30	45	60	75	90
.000	.003	-.001	.004	.002	.004	.004	.000
.038	.005	-.003	.002	.001	.003	.005	-.003
.077	.005	.000	.006	.004	.003	.004	-.003
.115	.004	-.001	.005	.002	.004	.004	-.001
.154	.007	.000	.006	.003	.002	.002	-.001
.192	.005	.000	.008	.003	.005	.005	.000
.231	.009	.001	.008	.008	.009	.008	.000
.269	.002	-.002	.006	.002	.005	.004	-.001
.308	.004	.000	.007	.005	.008	.006	.003
.346	.005	.001	.009	.007	.008	.008	.049
.385	.007	-.001	.008	.012	.043	.069	.076
.423	.081	.074	.080	.079	.083	.083	.081
.462	.089	.086	.095	.090	.089	.088	.085
.500	.091	.086	.093	.090	.091	.091	.086
.538	.080	.077	.086	.080	.087	.086	.089
.577	.073	.068	.077	.077	.083	.084	.083
.615	.067	.063	.074	.075	.081	.082	.072
.654	.058	.052	.067	.068	.072	.066	.006
.692	.067	.050	.066	.070	.072	.040	.003
.731	.058	.056	.060	.064	.065	.006	.000
.769	.041	.053	.056	.062	.057	.001	-.001
.808	.026	.038	.052	.056	.028	.001	.001
.846	.013	.030	.056	.061	.014	.005	.004
.885	-.002	.019	.054	.058	.007	.004	.000
.923	-.012	.006	.051	.054	.004	.002	.001
.962	-.019	.001	.052	.051	.006	.005	.003
1.000	-.027	-.005	.049	.054	.007	.007	.002

TABLE 3.- PRESSURE-COEFFICIENT DATA FOR THE FLAT PLATE - Continued

$$\left[M = 2.01\right]$$

$\epsilon = -3°$ $\quad \frac{2\beta y}{L(1-\epsilon\beta)} = 3.57$

$\frac{x}{L}$	ψ						
	0	15	30	45	60	75	90
.000	.013	.002	.005	.001	.007	.006	.005
.038	.009	.001	.003	.001	.003	.007	.001
.077	.014	.004	.004	.005	.004	.007	.000
.115	.011	.002	.005	.002	.005	.009	.002
.154	.010	.001	.005	.004	.003	.004	.002
.192	.012	.003	.008	.004	.007	.007	.005
.231	.014	.006	.008	.009	.012	.010	.006
.269	.011	.001	.003	.003	.007	.006	.003
.308	.012	.005	.008	.004	.009	.009	.007
.346	.010	.004	.009	.007	.009	.010	.007
.385	.012	.004	.007	.006	.008	.009	.007
.423	.013	.003	.008	.004	.007	.007	.005
.462	.013	.005	.009	.004	.009	.009	.003
.500	.016	.006	.009	.006	.010	.009	.007
.538	.015	.004	.010	.006	.009	.008	.008
.577	.011	.004	.008	.005	.009	.008	.003
.615	.013	.005	.009	.006	.009	.007	.005
.654	.012	.002	.006	.002	.005	.005	.003
.692	.013	.005	.009	.006	.008	.007	.005
.731	.010	.005	.008	.002	.005	.005	.006
.769	.011	.004	.006	.004	.003	.000	.004
.808	.012	.005	.005	.001	.004	.002	.009
.846	.013	.006	.008	.003	.008	.006	.006
.885	.013	.006	.007	.004	.007	.007	.005
.923	.013	.002	.005	.001	.004	.003	.004
.962	.014	.002	.007	.005	.006	.005	.004
1.000	.013	.003	.009	.005	.007	.008	.007

$\epsilon = -3°$ $\quad \frac{2\beta y}{L(1-\epsilon\beta)} = 1.10$

$\frac{x}{L}$	ψ						
	0	15	30	45	60	75	90
.000	.007	.000	.004	.003	.008	.003	.003
.038	.005	-.001	.004	.000	.005	.000	-.002
.077	.006	.000	.005	.003	.007	.001	-.002
.115	.003	.001	.005	.006	.008	.007	-.003
.154	.003	.002	.005	.004	.002	.005	.001
.192	.005	.003	.009	.006	.008	.007	.000
.231	.010	.004	.010	.008	.014	.009	.002
.269	.006	.001	.004	.004	.008	.005	.000
.308	.004	.003	.008	.007	.012	.008	.001
.346	.005	.004	.009	.006	.009	.009	.005
.385	.006	.003	.008	.007	.010	.008	.003
.423	.005	.003	.008	.005	.009	.006	.003
.462	.005	.004	.009	.006	.009	.008	.002
.500	.008	.004	.010	.008	.010	.008	.004
.538	.007	.004	.009	.007	.009	.008	.003
.577	.008	.003	.008	.004	.009	.006	.001
.615	.007	.004	.009	.005	.009	.007	.004
.654	.004	.002	.007	.002	.005	.001	.001
.692	.007	.003	.008	.004	.009	.006	.004
.731	.006	.004	.006	.002	.007	.005	.002
.769	.004	.002	.006	.003	.004	.002	.002
.808	.004	.000	.004	.000	.005	.003	.002
.846	.083	.004	.008	.004	.008	.005	.004
.885	.093	.084	.007	.003	.007	.006	.004
.923	.081	.078	.004	.001	.005	.004	.000
.962	.084	.077	.006	.003	.005	.005	.002
1.000	.074	.072	.008	.001	.010	.007	.005

$\epsilon = -3°$ $\quad \frac{2\beta y}{L(1-\epsilon\beta)} = .99$

$\frac{x}{L}$	ψ						
	0	15	30	45	60	75	90
.000	.006	-.001	.005	.005	.008	.003	.005
.038	.001	-.001	.004	.004	.005	.005	.001
.077	.009	.001	.005	.009	.007	.005	.003
.115	.001	-.001	.007	.006	.009	.007	.003
.154	.001	.000	.006	.006	.005	.006	.007
.192	.004	.001	.009	.006	.009	.007	.006
.231	.008	.002	.011	.010	.015	.010	.009
.269	.003	.000	.006	.006	.009	.006	.004
.308	.006	.001	.009	.008	.012	.009	.007
.346	.004	.002	.010	.009	.011	.010	.007
.385	.004	.001	.010	.009	.011	.009	.008
.423	.004	-.001	.008	.004	.009	.007	.005
.462	.006	.001	.009	.009	.011	.008	.007
.500	.008	.001	.009	.009	.012	.008	.007
.538	.008	.001	.010	.008	.011	.009	.007
.577	.007	.001	.008	.006	.010	.008	.004
.615	.008	.001	.009	.007	.010	.008	.006
.654	.002	.001	.004	.004	.007	.003	.003
.692	.005	.000	.009	.006	.010	.008	.005
.731	.004	-.001	.005	.004	.006	.004	.006
.769	.010	-.002	.005	.004	.006	.001	.006
.808	.091	.078	.003	.003	.005	.002	.006
.846	.090	.086	.008	.005	.007	.007	.007
.885	.090	.086	.007	.004	.008	.006	.008
.923	.083	.077	.035	.004	.005	.004	.006
.962	.073	.068	.077	.005	.007	.005	.007
1.000	.067	.069	.078	.006	.009	.007	.009

$\epsilon = -3°$ $\quad \frac{2\beta y}{L(1-\epsilon\beta)} = .87$

$\frac{x}{L}$	ψ						
	0	15	30	45	60	75	90
.000	.005	-.001	.003	.003	.007	.004	.001
.038	.006	-.005	.000	-.001	.007	.004	-.004
.077	.008	.000	.003	.002	.007	.006	-.003
.115	.004	-.001	.004	.003	.007	.006	-.001
.154	.001	-.001	.006	.003	.004	.008	.001
.192	.006	.001	.006	.004	.007	.007	.002
.231	.008	.001	.007	.008	.014	.009	.004
.269	.003	-.002	.004	.003	.008	.007	.002
.308	.004	.001	.006	.005	.009	.009	.006
.346	.005	.002	.008	.006	.011	.008	.006
.385	.007	-.001	.006	.006	.009	.008	.005
.423	.005	-.001	.006	.003	.008	.006	.003
.462	.006	.000	.008	.005	.010	.008	.004
.500	.007	.000	.007	.006	.010	.008	.005
.538	.007	.001	.008	.006	.009	.007	.005
.577	.006	.000	.006	.004	.009	.006	.002
.615	.007	.001	.008	.005	.010	.006	.001
.654	-.002	-.004	.008	.001	.006	.005	.000
.692	.006	.000	.009	.004	.009	.007	.004
.731	.099	.081	.006	.001	.007	.004	.003
.769	.098	.089	.007	.002	.005	.003	.001
.808	.088	.084	.067	.001	.004	.003	.003
.846	.093	.088	.089	.003	.009	.006	.006
.885	.085	.084	.089	.001	.007	.005	.003
.923	.077	.073	.081	.000	.005	.004	.002
.962	.065	.067	.080	.001	.007	.007	.002
1.000	.052	.055	.082	.001	.011	.007	.004

TABLE 3.- PRESSURE-COEFFICIENT DATA FOR THE FLAT PLATE - Concluded

$$\left[M = 2.01\right]$$

$\epsilon = -3°$ $\qquad \frac{2\beta y}{L(1-\epsilon\beta)} = .76$

$\frac{x}{L}$	ψ						
	0	15	30	45	60	75	90
.000	.009	.000	.003	.006	.006	.004	.005
.038	.006	-.003	-.001	.006	.006	.006	-.001
.077	.008	.002	.003	.006	.005	.006	.001
.115	.007	.002	.003	.008	.006	.005	.000
.154	.005	.000	.004	.009	.006	.006	.002
.192	.005	.003	.006	.007	.008	.007	.003
.231	.009	.004	.007	.011	.013	.010	.005
.269	.006	.001	.003	.005	.008	.006	-.001
.308	.007	.004	.005	.009	.011	.010	.005
.346	.007	.004	.007	.010	.011	.010	.004
.385	.007	.003	.005	.009	.011	.009	.007
.423	.007	.002	.005	.008	.008	.006	.003
.462	.008	.004	.006	.010	.010	.008	.003
.500	.008	.004	.006	.009	.010	.008	.005
.538	.009	.003	.006	.009	.009	.008	.004
.577	.009	.004	.004	.007	.010	.006	.003
.615	.010	.003	.006	.008	.009	.006	.004
.654	.106	.085	.004	.004	.005	.003	.001
.692	.112	.106	.011	.007	.008	.006	.005
.731	.104	.097	.090	.004	.005	.004	.001
.769	.102	.095	.092	.004	.003	.002	.003
.808	.096	.089	.087	.004	.003	.004	.003
.846	.089	.088	.090	.007	.007	.006	.007
.885	.078	.077	.085	.006	.007	.006	.005
.923	.063	.064	.080	.004	.005	.004	.003
.962	.051	.056	.079	.006	.005	.006	.004
1.000	.039	.048	.072	.007	.010	.009	.003

$\epsilon = -3°$ $\qquad \frac{2\beta y}{L(1-\epsilon\beta)} = .66$

$\frac{x}{L}$	ψ						
	0	15	30	45	60	75	90
.000	.007	.000	.002	.007	.008	.002	.002
.038	.006	.001	.001	.006	.004	.001	-.003
.077	.006	.002	.001	.008	.007	.005	-.001
.115	.007	.000	.002	.007	.007	.005	.001
.154	.005	.001	.003	.008	.005	.007	.001
.192	.009	.002	.005	.008	.009	.006	.002
.231	.011	.004	.007	.013	.014	.009	.003
.269	.006	.001	.003	.007	.009	.006	.000
.308	.007	.002	.004	.009	.010	.008	.003
.346	.008	.004	.007	.012	.011	.009	.005
.385	.008	.002	.005	.011	.012	.009	.005
.423	.009	.001	.004	.008	.009	.005	.001
.462	.009	.003	.007	.010	.010	.008	.001
.500	.009	.003	.006	.011	.011	.008	.004
.538	.011	.004	.007	.010	.010	.007	.005
.577	.029	.001	.006	.009	.009	.007	-.001
.615	.126	.106	.107	.010	.010	.006	.001
.654	.120	.110	.112	.014	.007	.005	-.003
.692	.116	.108	.108	.054	.008	.007	.001
.731	.107	.098	.099	.077	.007	.007	.003
.769	.102	.093	.096	.078	.006	.006	-.001
.808	.088	.088	.092	.072	.005	.004	.001
.846	.080	.081	.091	.066	.008	.007	.002
.885	.063	.071	.083	.054	.008	.006	.002
.923	.048	.056	.077	.042	.007	.004	.000
.962	.032	.047	.073	.035	.011	.006	.000
1.000	.016	.036	.068	.030	.011	.008	.001

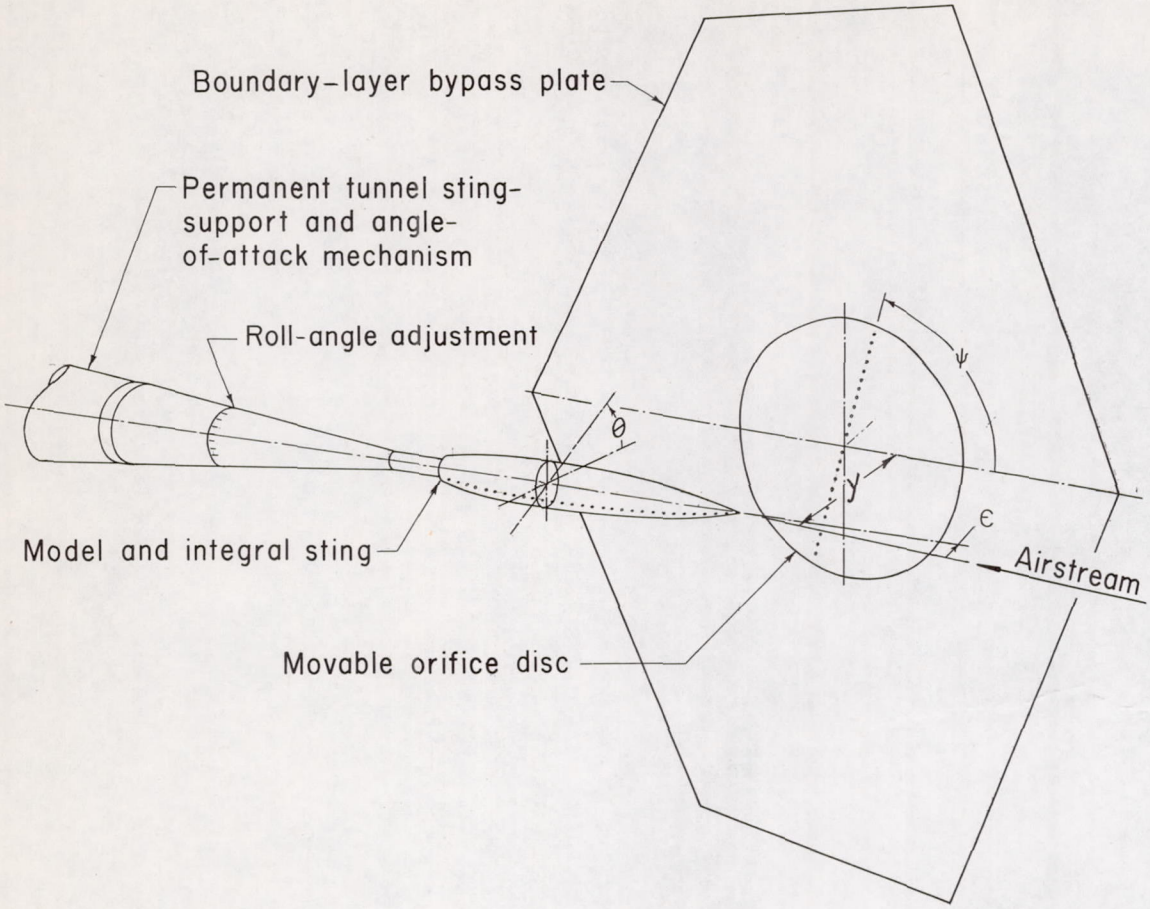

(a) Perspective view of test setup.

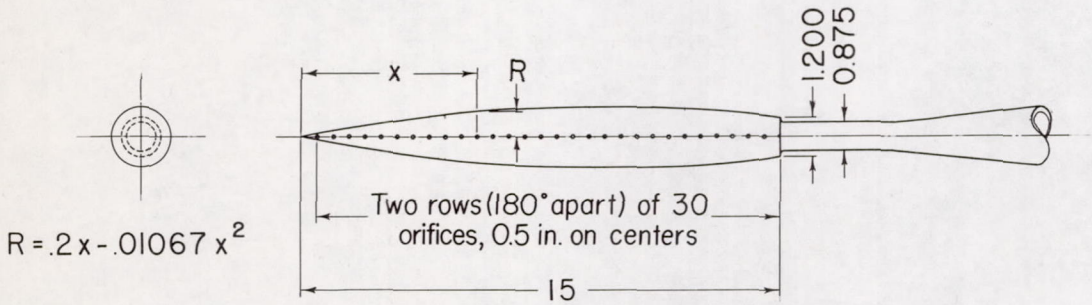

(b) Test model.

Figure 1.- Sketch of test apparatus. All dimensions are in inches.

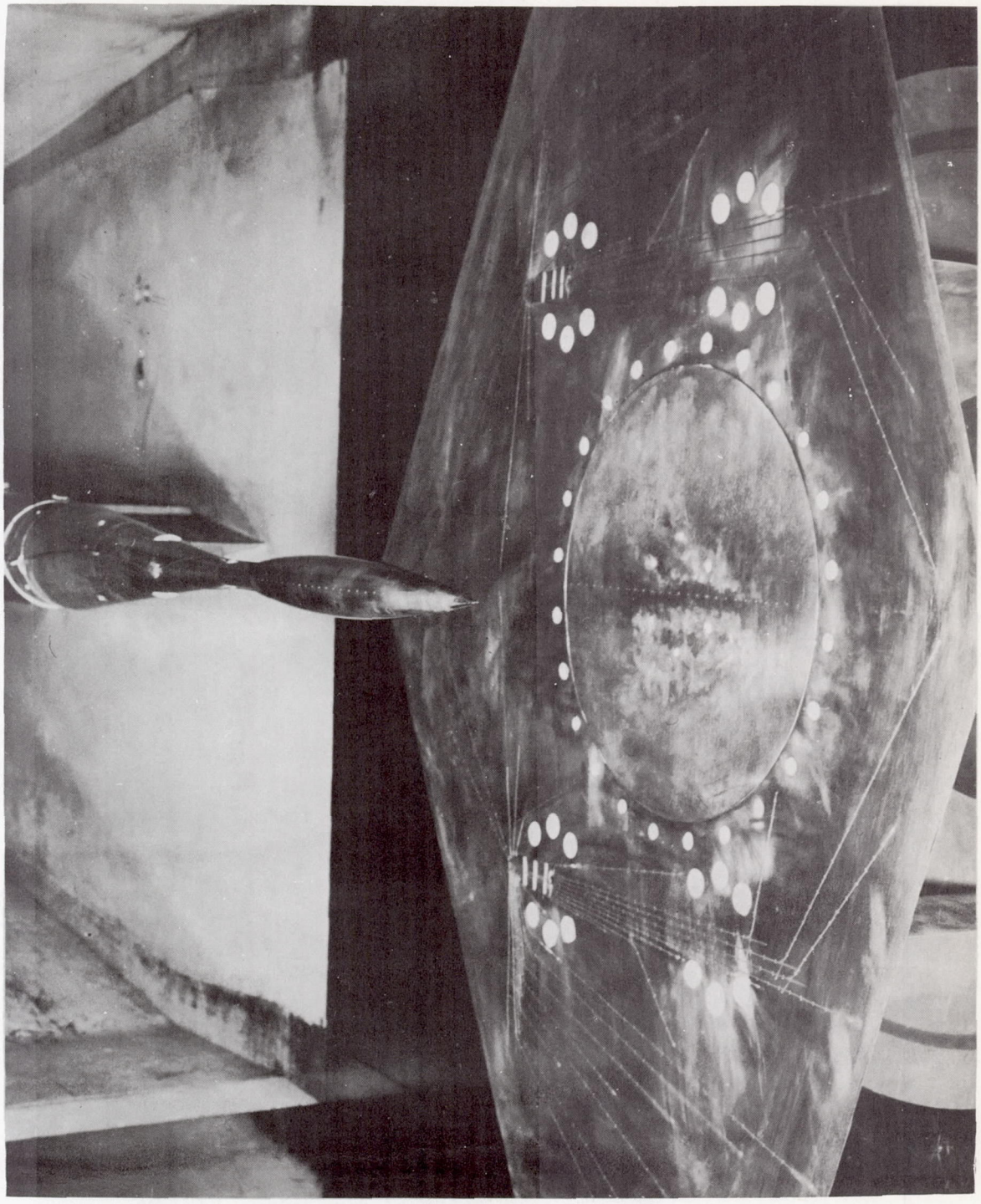

Figure 2.- Downstream view of test setup. L-86440

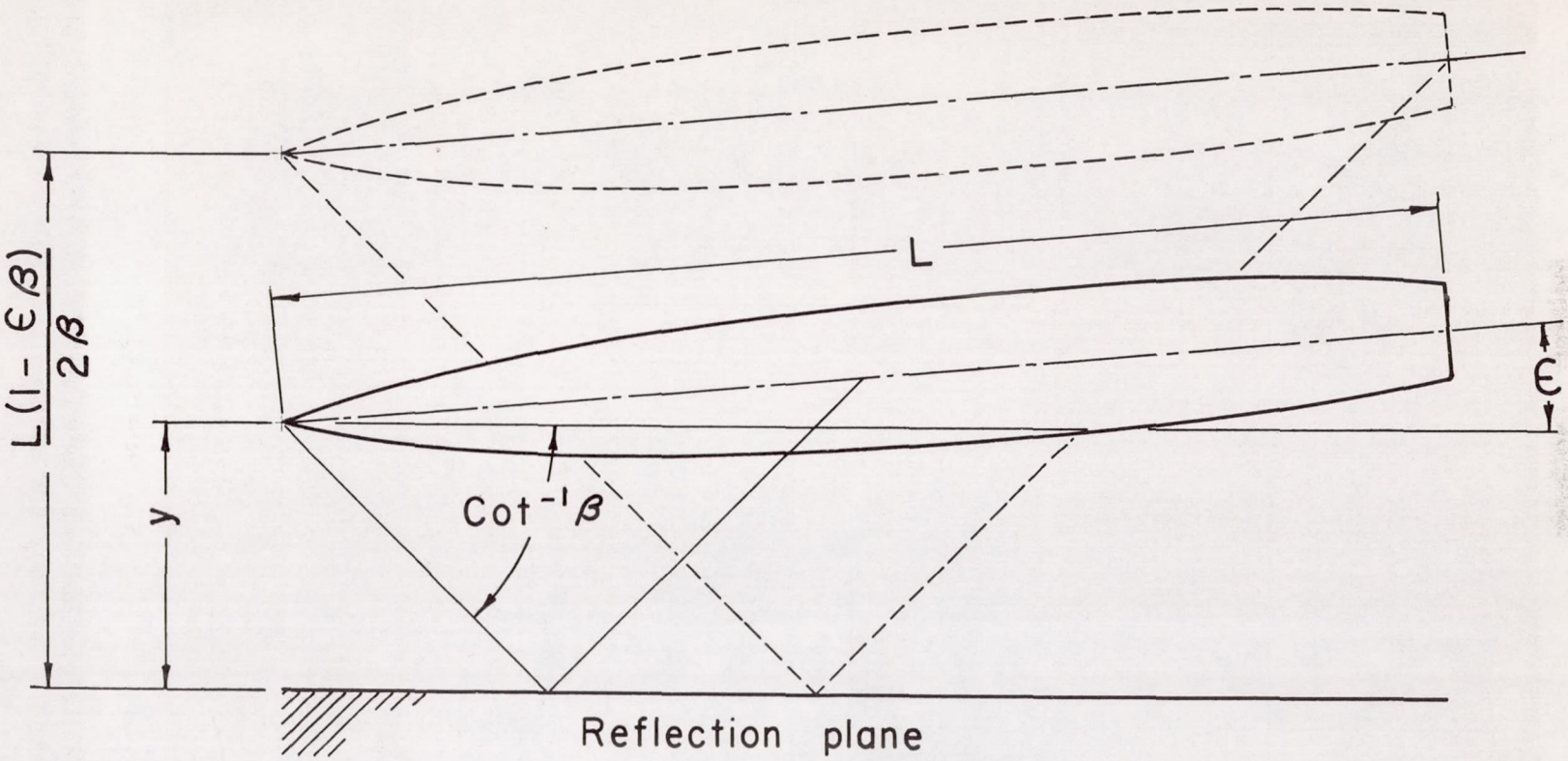

Figure 3.- Relation of model to reflection plane.

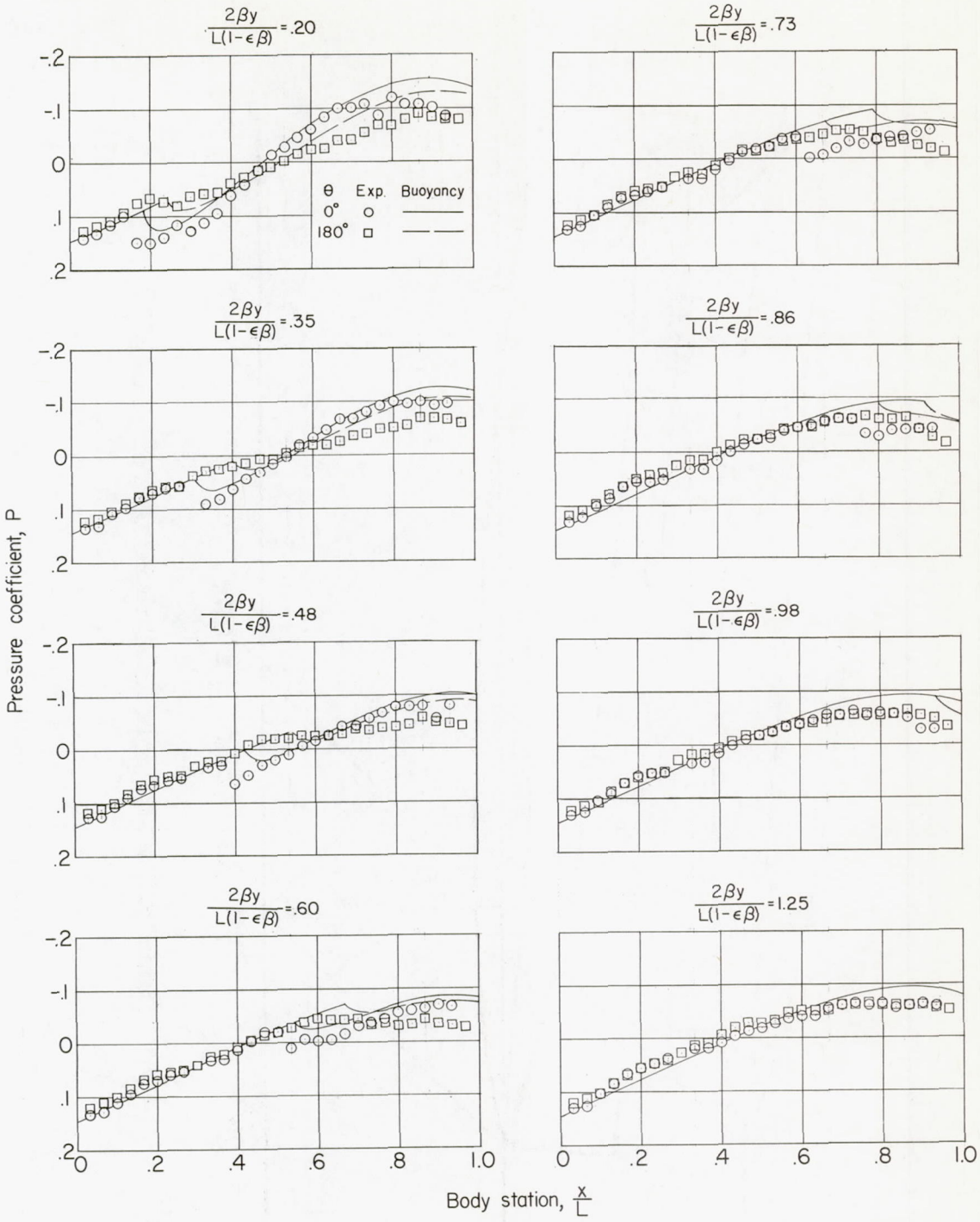

(a) M = 1.41.

Figure 4.- Comparison between experimental and theoretical pressure coefficients on the body for various body-plate separation distances. $\epsilon = 0^{\circ}$.

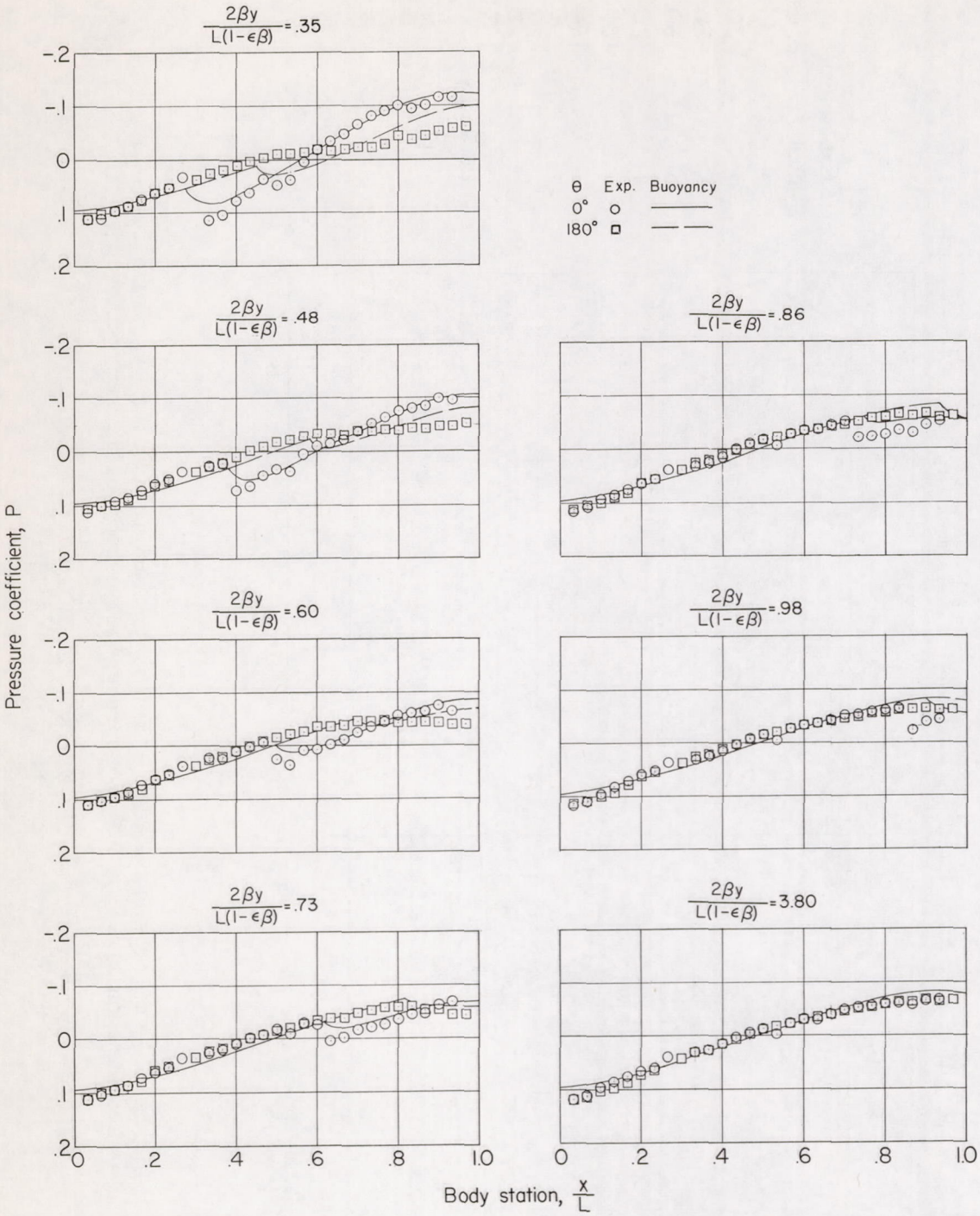

(b) M = 2.01.

Figure 4.- Concluded.

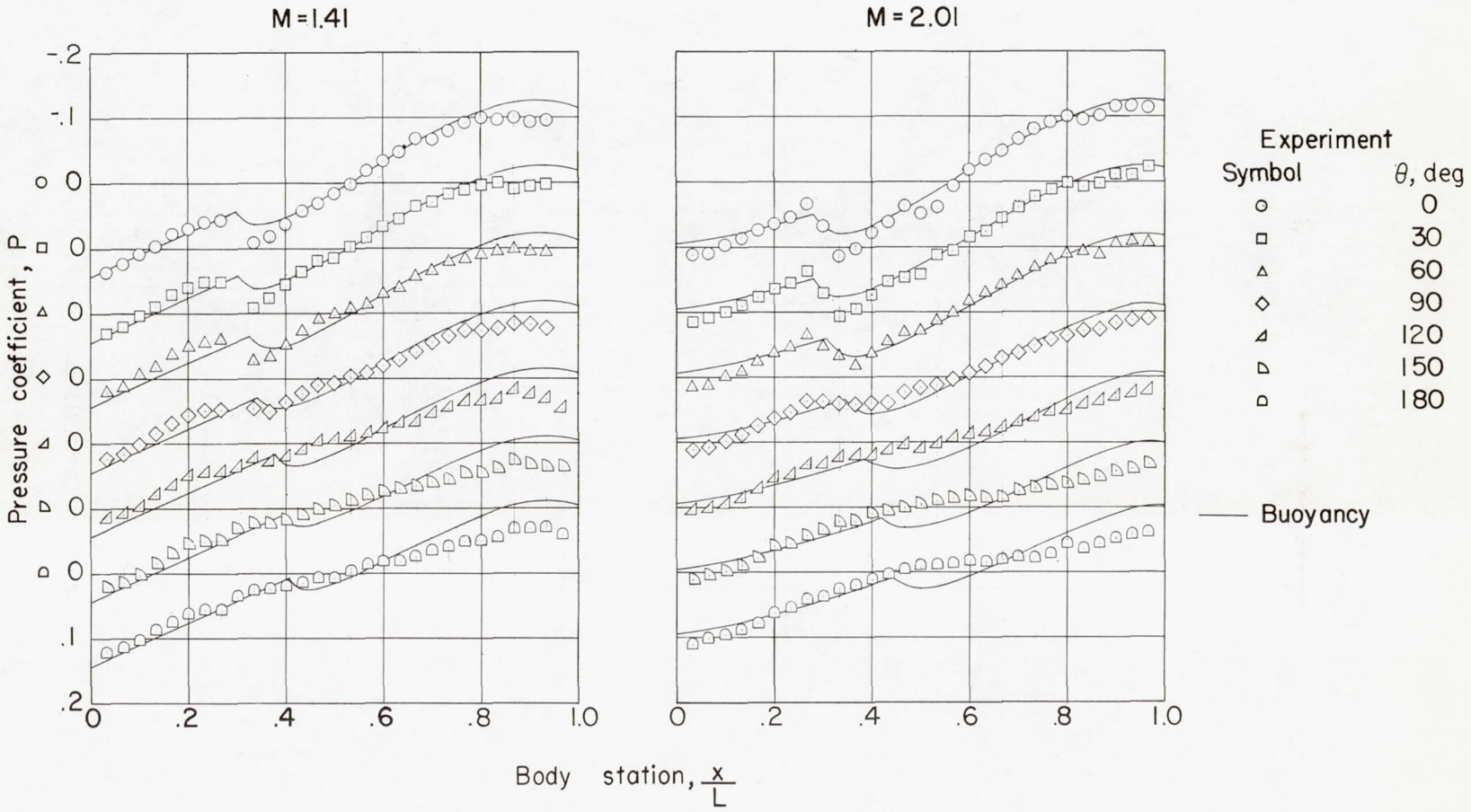

Figure 5.- Comparison between experimental and theoretical pressure coefficients on the body for a representative body-plate separation distance. $\frac{2\beta y}{L(1 - \epsilon\beta)} = 0.35$; $\epsilon = 0^{\circ}$.

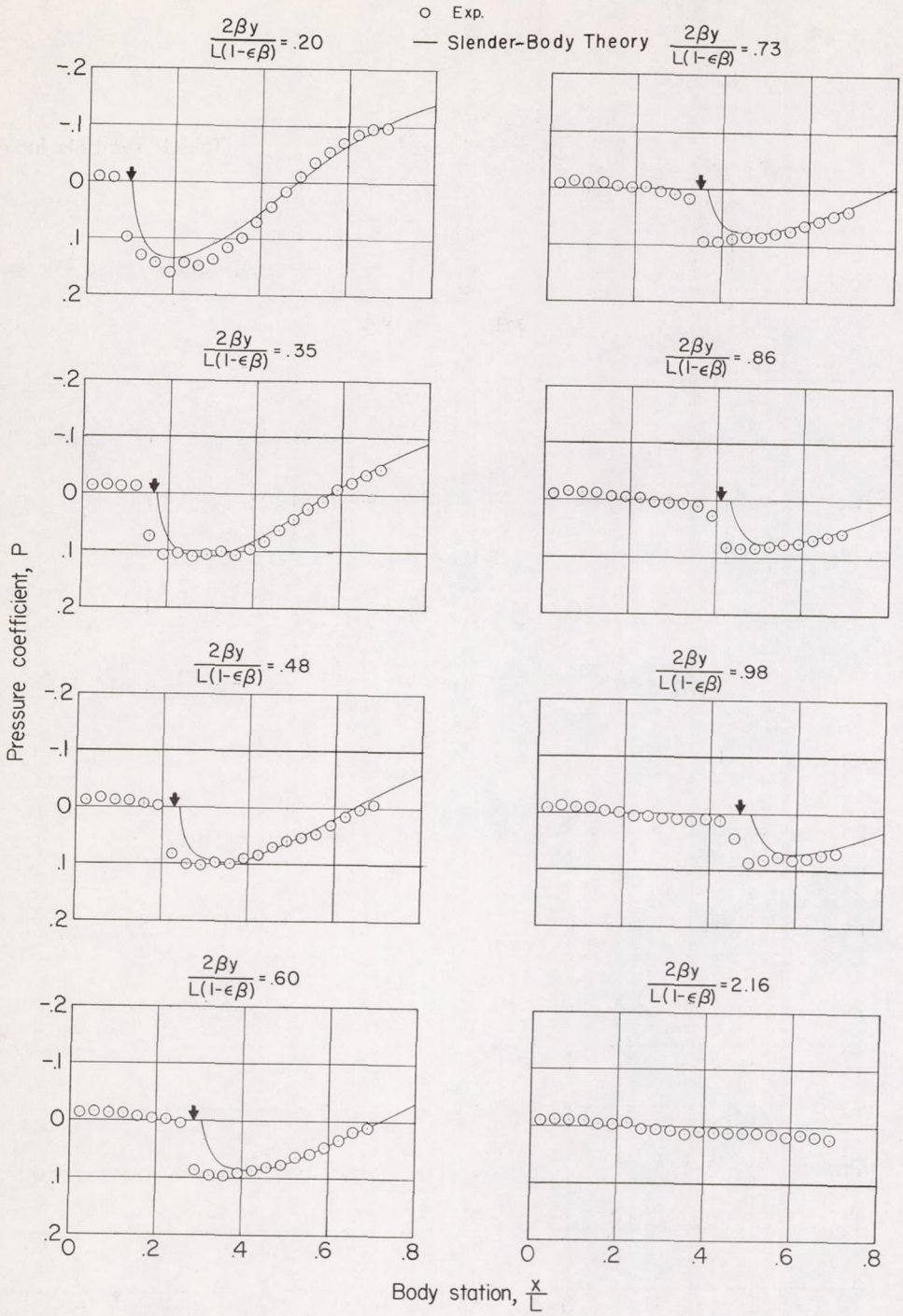

(a) M = 1.41.

Figure 6.- Comparison between experimental and theoretical pressure coefficients on the plate for various body-plate separation distances. The arrows indicate computed shock-intersection points. $\epsilon = 0^{\circ}$.

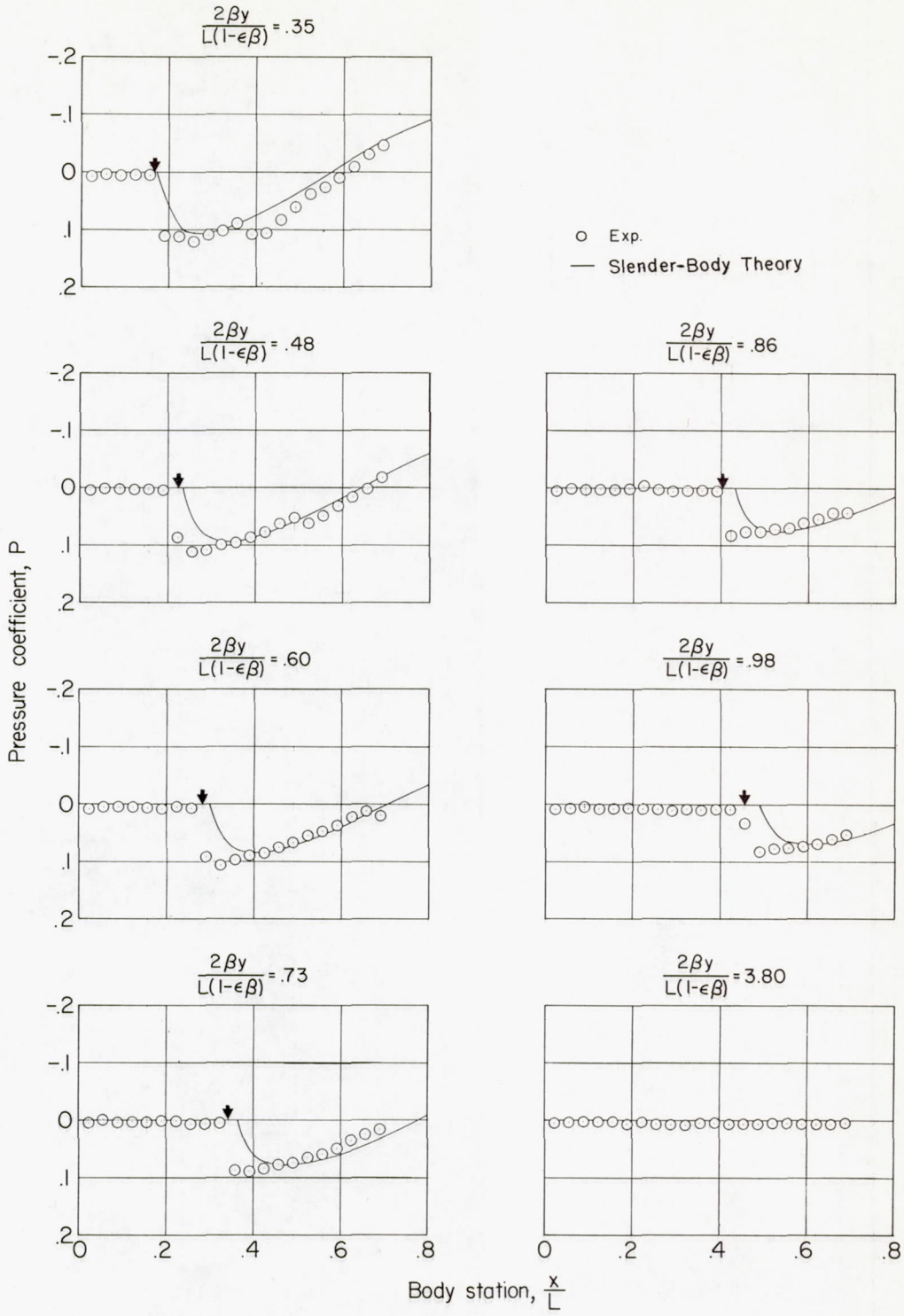

(b) M = 2.01.

Figure 6.- Concluded.

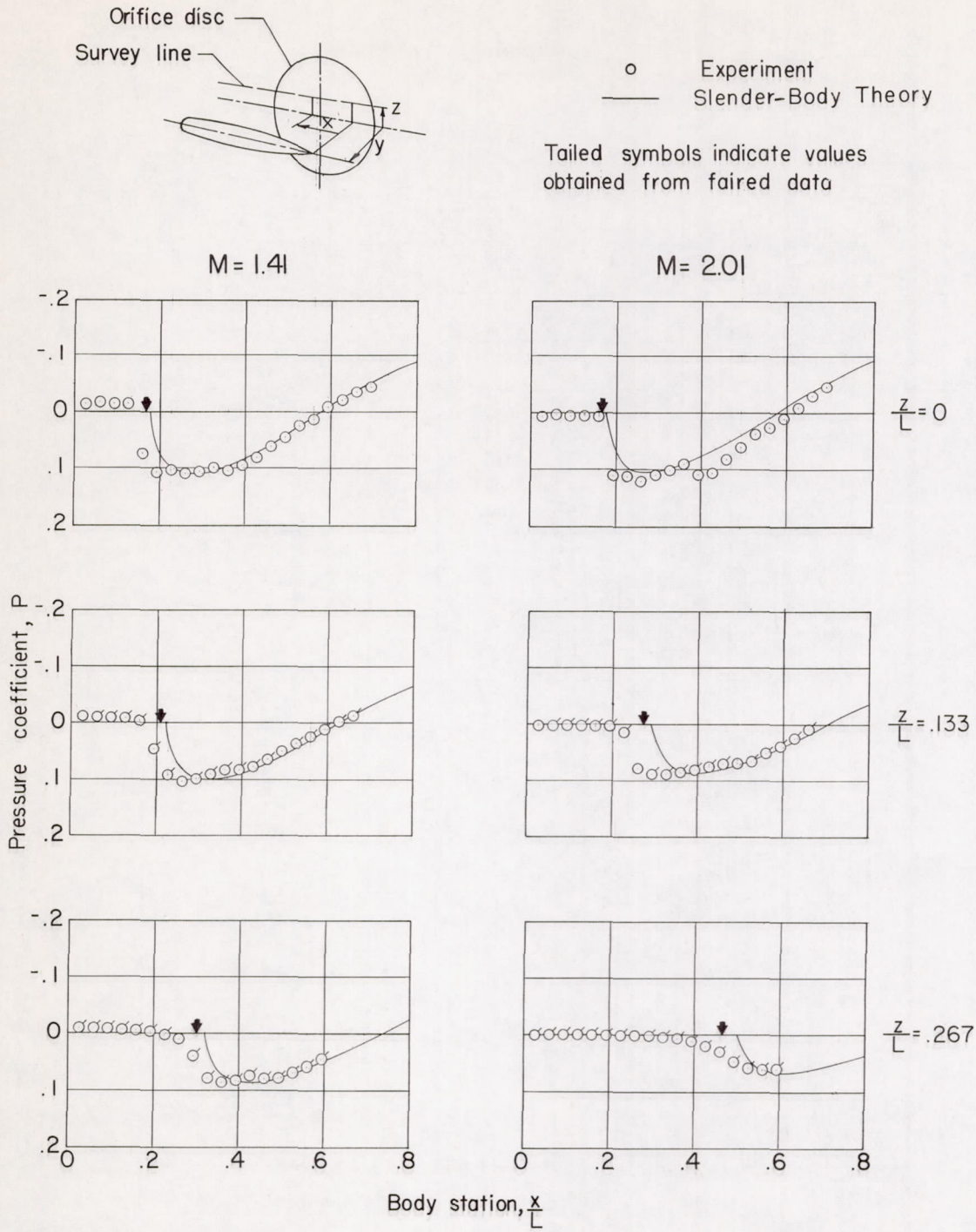

Figure 7.- Comparison between experimental and theoretical pressure coefficients on the plate for a representative body-plate separation distance. Arrows indicate computed shock-intersection points. $\frac{2\beta y}{L(1 - \epsilon\beta)} = 0.35$; $\epsilon = 0^{\circ}$.

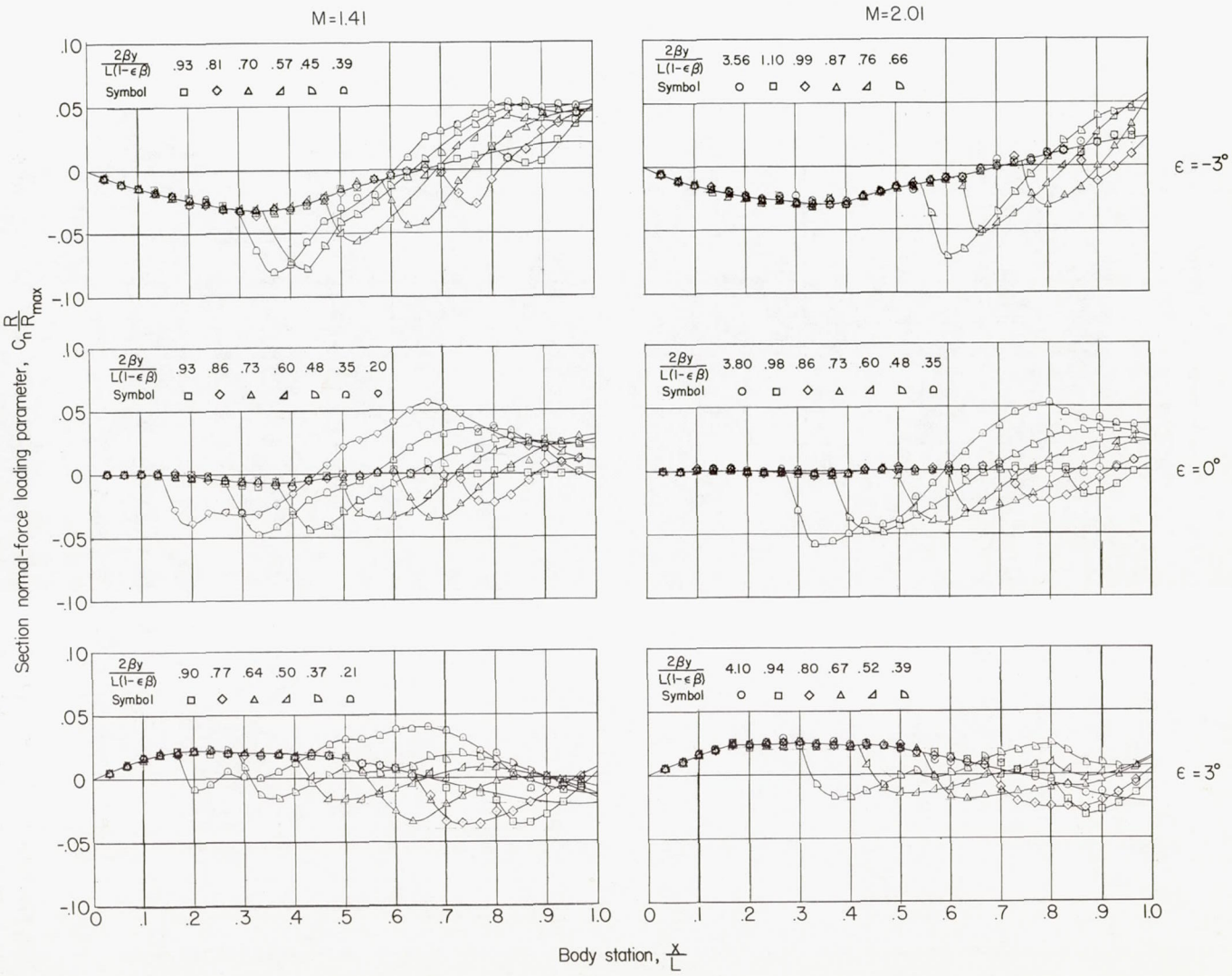

Figure 8.- Normal-force loading distribution on the body.

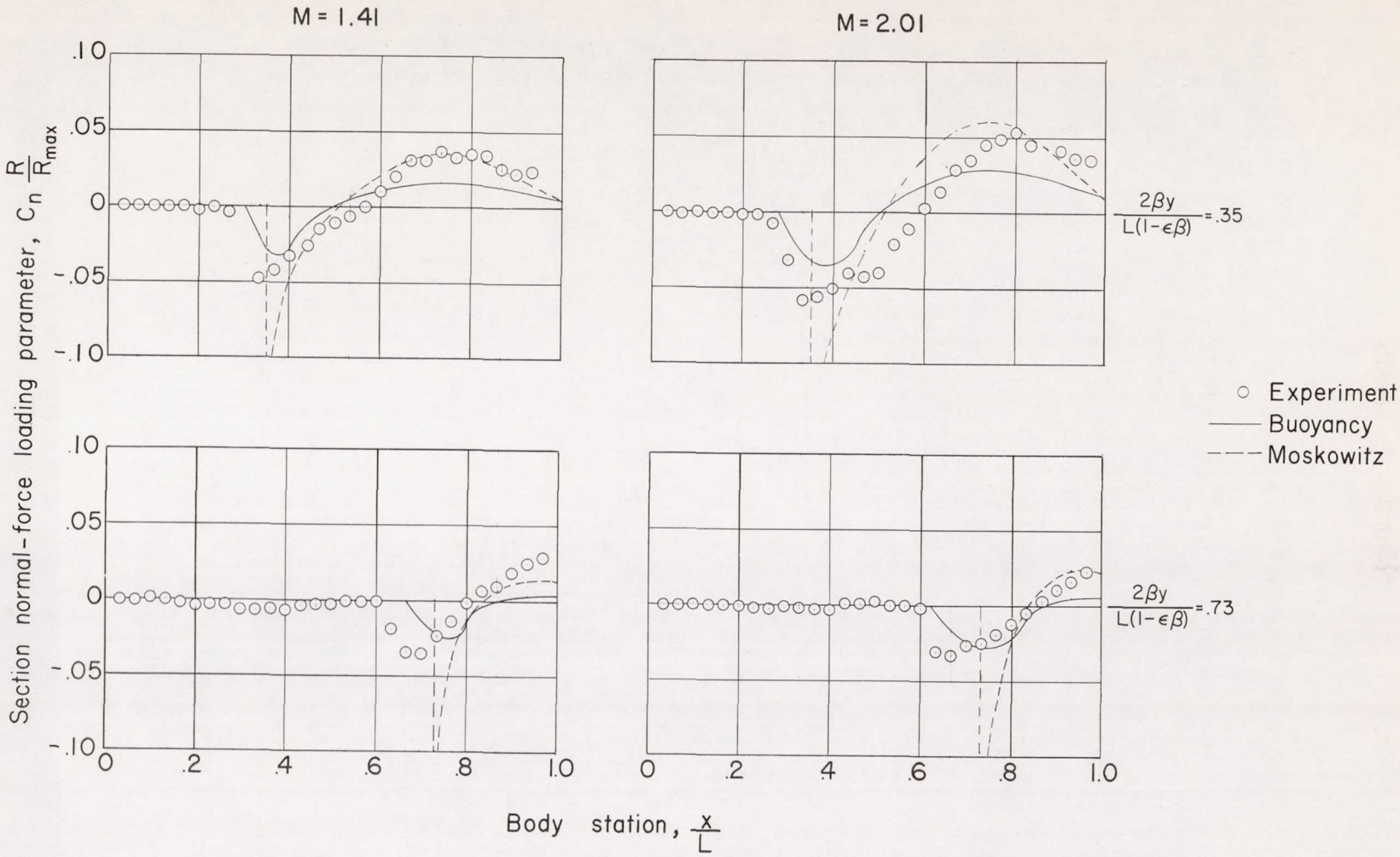

Figure 9.- Comparison between experimental and theoretical loading distributions for representative separation distances.

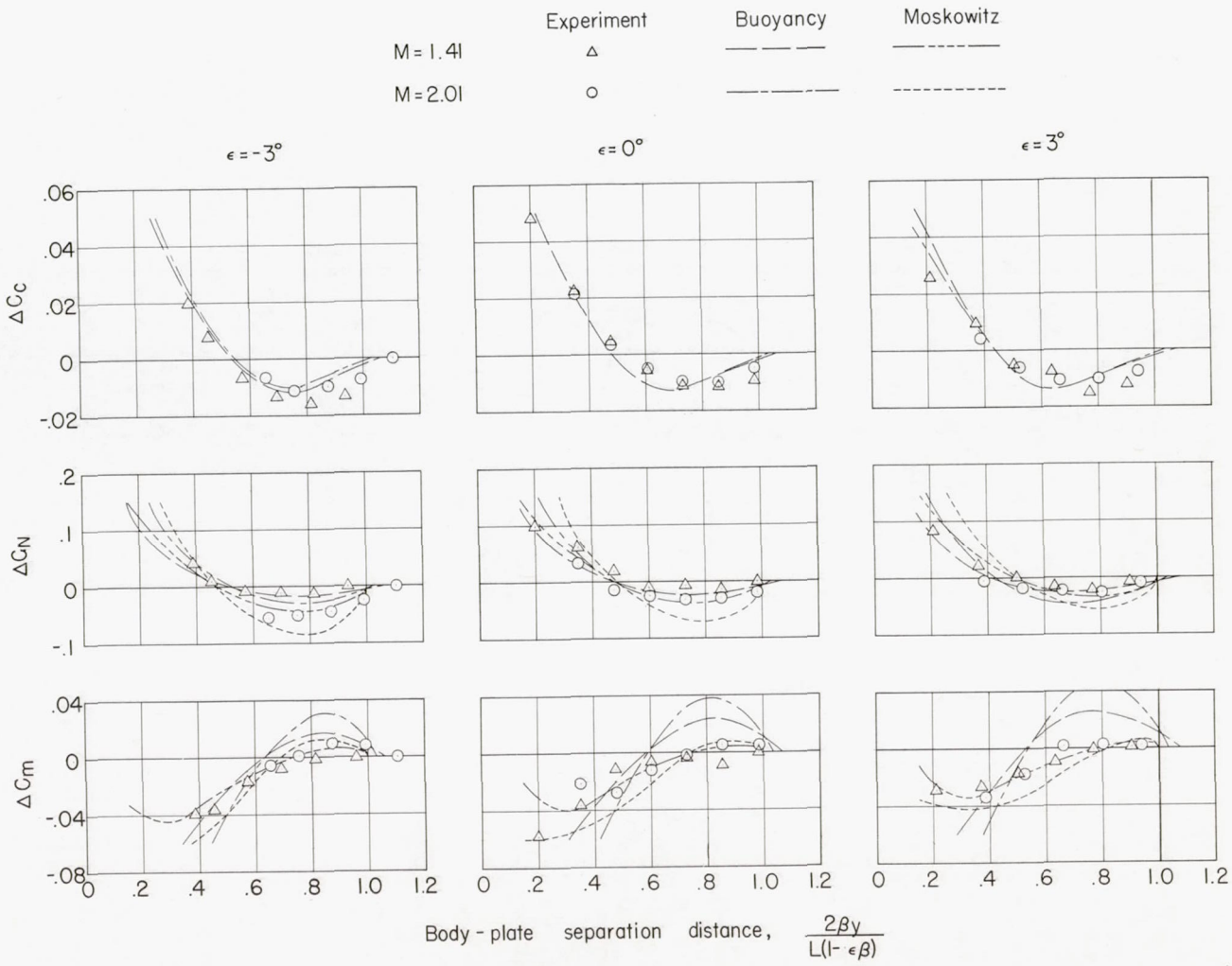

Figure 10.- Variation with body-plate separation distance of increments in the aerodynamic characteristics of the body due to body-plate interference.

NACA-Langley