NACA RM E54L14

NACA

RESEARCH MEMORANDUM

WIND-TUNNEL INVESTIGATION AT MACH 1.9 OF MULTIJET-MISSILE BASE PRESSURES

By L. Eugene Baughman

Lewis Flight Propulsion Laboratory
Cleveland, Ohio

NATIONAL ADVISORY COMMITTEE
FOR AERONAUTICS

WASHINGTON
March 3, 1955
Declassified April 12, 1961

NATIONAL ADVISORY COMMITTEE FOR AERONAUTICS

RESEARCH MEMORANDUM

WIND-TUNNEL INVESTIGATION AT MACH 1.9 OF MULTIJET-MISSILE BASE PRESSURES

By L. Eugene Baughman

SUMMARY

An experimental wind-tunnel investigation was conducted at Mach 1.9 to determine the pressures acting on the base of a multijet missile using unheated air and carbon dioxide as jet fluids. The variation of base pressure with jet static-pressure ratio was compared with results estimated for an axisymmetric single-jet model and some correlation was observed.

INTRODUCTION

The results of numerous investigations of base pressure of bodies with exiting jets have been published recently (e.g., refs. 1 to 6). All these studies have been concerned with the case of a single jet. For some types of ballistic rocket, however, multiple jets may discharge at the base. Such missiles accelerate to high supersonic speeds while still within the atmosphere and, although the base pressure may be unimportant with respect to aerodynamic drag, it may assume importance with regard to structural loads.

The present investigation was concerned with a single large sustainer rocket surrounded by four smaller booster rockets. All engines were enclosed in a fairing that created a large amount of blunt base area. The base pressure for this configuration was determined at Mach 1.9 using both unheated air and carbon dioxide as jet fluids. The jet static-pressure ratio was varied over a range likely to be encountered during transient flight at that Mach number.

SYMBOLS

The following symbols are used in this report:

A_n/A_b ratio of nozzle exit area to total projected base area

C_p pressure coefficient, $2\left(\frac{p - p_0}{\gamma p_0 M_0^2}\right)$

M Mach number

P total pressure

p static pressure

β conical boattail half angle, deg

γ ratio of specific heats

ε half angle at nozzle exit, deg

Subscripts:

b base

j jet conditions at nozzle exit

0 free stream

APPARATUS AND PROCEDURE

The multijet missile model was designed to give realistic values for the nozzle jet static-pressure even though the jet total-pressure and nozzle expansion ratios were far below those which should occur with rocket engines at high altitudes. The premise that jet static-pressure ratio is the principle variable to correlate the effect of jet Mach number with base pressure is indicated in reference 2 and substantiated by unpublished data. The jet static-pressure ratios p_j/p_0 selected as typical for sustainer and booster nozzles were 2.33 and 0.73 respectivly. Since the available air supply limited the total-pressure ratio P_j/p_0 to approximately 20, the resulting sustainer and booster nozzle jet total-to-static pressure ratios P_j/p_j were 27.4 and 8.6 respectively. Both nozzles had a divergence angle of 15°.

The multiple-nozzle afterbody under study was affixed to a cone-cylinder forebody supported by a hollow strut through which the jet gas was supplied. This assembly was mounted in an 18- by 18-inch, Mach 1.9 tunnel as illustrated in figure 1. Pertinent dimensions and pressure instrumentation of the model are given in figures 2(a) and (b). In addition to studying the basic configuration, several experiments were made with the model shown in figure 2(c) which was modified by the addition of ram scoops.

Base pressure and jet static-pressure measurements were made for a range of jet total-pressure ratios utilizing either air or carbon dioxide as jet gases. Jet total pressure was measured within the model just upstream of the nozzles. All nozzles were operated simultaneously at the same total pressure. Pressures were photographically recorded on dibutyl phthalate and tetrabromoethane multiple-tube manometer boards. The total temperature of the tunnel flow was 150° F and the stream Reynolds number per foot was 3.24×10^6. The dewpoint of the tunnel air was maintained below -5° F to minimize condensation effects although the jet supply was undried service air.

DISCUSSION OF RESULTS

The variation of base pressure coefficient with jet total-pressure ratio is shown in figure 3. Because the variation of base pressure coefficient between the various orifice locations was observed to be less than ±0.01, only average values are presented herein. The data obtained with carbon dioxide differed only slightly from those obtained with air, indicating little effect of specific heat ratio γ. It has been demonstrated in reference 2, however, that the validity of utilizing carbon dioxide to simulate a hot jet with a low specific heat ratio is subject to some question.

The shock structures downstream of the nozzles are shown in the schlieren photographs of figure 4 for several jet total-pressure ratios. One point of interest is the inward deflection of the booster jet wakes despite the outward inclination of the nozzle axes that is caused by high pressures on the outboard side of the jet and the low pressures on the inboard side.

The base pressure coefficients of figure 3 are replotted in figure 5 as a function of jet static-pressure ratio. Two curves result since each value of base pressure coefficient was plotted at two measured static-pressure ratios, one corresponding to the booster nozzles and the other to the sustainer nozzle. The nozzles were operated at different jet static-pressure ratios since they were designed for best operation in different altitude ranges, and thus had different expansion ratios. The dashed portions of the curves indicate flow separation within the nozzles. Superimposed on the figure is the estimated variation for the case of a single jet discharging from the base of an axially symmetric body of zero boattail angle (dot-dash curve). The ratio of total nozzle-exit area to total base area ($A_n/A_b = 0.4$) and the nozzle half-angle ϵ were maintained the same as the multijet case. The estimated variation was obtained by interpolating between unpublished data for models having convergent-divergent nozzles and values of A_n/A_b of 0.36 and 0.51. The data were obtained in the same tunnel with the same support body. Small corrections were made for the desired nozzle and boattail angles

and the resulting estimate of $C_{p,b}$ is considered reliable to ±0.02. The estimated variation of the single jet case falls between the curves for the booster and sustainer nozzles. This is not surprising since all the nozzles play a part in establishing the base pressure. If an attempt had been made, prior to this experiment, to predict the base pressure of the multijet configuration from the single-jet data, it would have been necessary to estimate a mean effective jet static-pressure ratio for the multijet case with which to enter the single jet curve. The present data are too limited to verify any method for finding this mean although it is interesting to note that the use of the sustainer nozzle jet static-pressure ratio alone would have yielded values of base pressure close to those measured even over the dashed portion of the curve where the flow within the nozzle is separated and $p_j = p_b$. For most applications, the solid portions of the curves corresponding to unseparated flow in the nozzles represents the range of practical interest.

For a missile with multijet rocket booster engines, one possible design would be to mount the engines to a main frame and enclose them in a common fairing. A method of reducing potential loads on such a fairing was investigated by mounting boundary-layer scoops at the base of the body between the booster rockets in order to pressurize the base region. Although in actual practice this pressurization might increase the air loads on the sustainer nozzle, forward location of the scoops, with suitable baffles, might suffice. The results of the scoop tests are summarized in figure 6. Again the base pressure coefficients represent average values but in the case of the four scoops, where one partially covered the instrumented quadrant, the variations across the base were quite large (±0.07). The pressures on the base of the scoops as measured with a single orifice are also presented. With four scoops, the average base pressure was raised above ambient although the pressure on the back of the scoops remained low. With two diametrically opposite scoops, the base pressure in a quadrant without a scoop was increased over the no scoop value but remained below ambient pressure. There was no instrumentation in a scoop quadrant for the two scoop case. Again the scoop base pressure remained low.

Lewis Flight Propulsion Laboratory
National Advisory Committee for Aeronautics
Cleveland, Ohio, December 8, 1954

REFERENCES

1. Cortright, Edgar M., Jr., and Schroeder, Albert H.: Investigation at Mach Number 1.91 of Side and Base Pressure Distributions over Conical Boattails without and with Jet Flow Issuing from Base. NACA RM E51F26, 1951.

2. Cortright, Edgar M., Jr., and Kochendorfer, Fred D.: Jet Effects on Flow over Afterbodies in Supersonic Stream. NACA RM E53H25, 1953.

3. Vargo, Donald J., and Englert, Gerald W.: Effect of Nozzle Contour on Drag of Parabolic Afterbodies. NACA RM E54D02, 1954.

4. Englert, Gerald W., Vargo, Donald J., and Cubbison, Robert W.: Effect of Jet-Nozzle-Expansion Ratio on Drag of Parabolic Afterbodies. NACA RM E54B12, 1954.

5. O'Donnell, Robert M., and McDearmon, Russell, W.: Experimental Investigation of Effects of Primary Jet Flow and Secondary Flow Through a Zero Length Ejector on Base and Boattail Pressures of a Body of Revolution at Free Stream Mach Numbers of 1.62, 1.93, and 2.41. NACA RM L54I22, 1954.

6. de Moraes, Carlos A., and Nowitzky, Albin M.: Experimental Effects of Propulsive Jets and Afterbody Configurations on the Zero-Lift Drag of Bodies of Revolution at a Mach Number of 1.59. NACA RM L54C16, 1954.

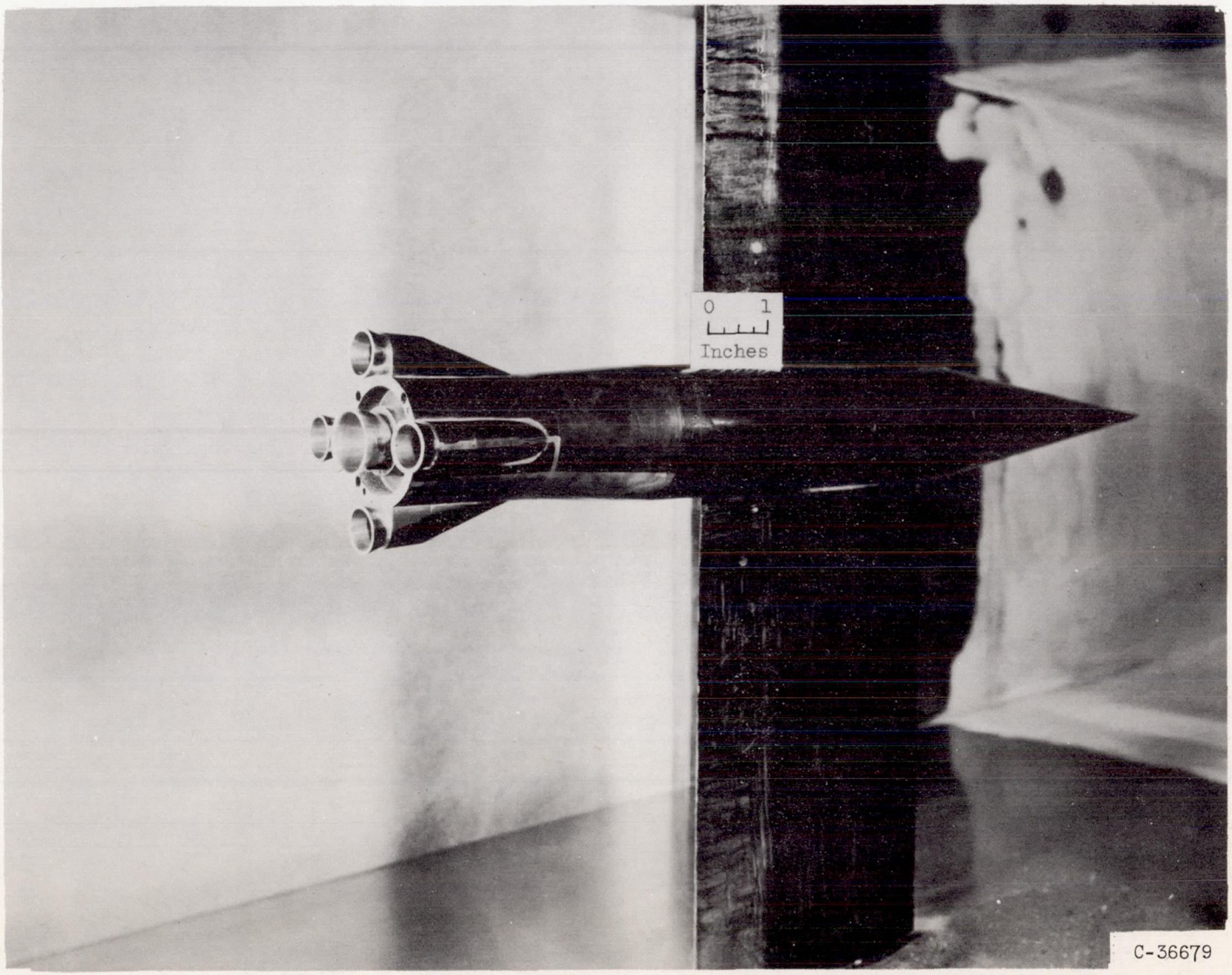

Figure 1. - Multijet missile in Mach 1.9 wind tunnel.

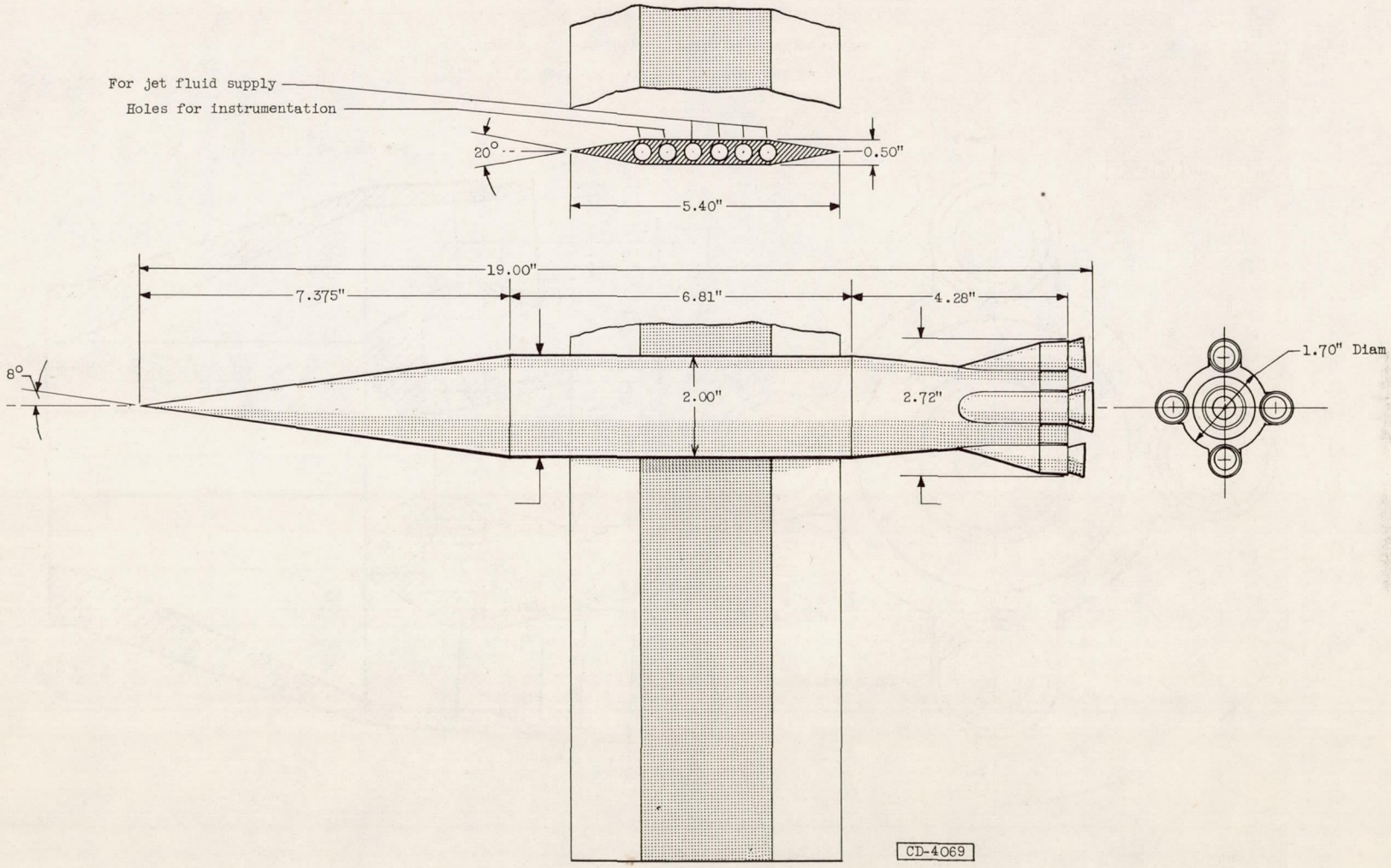

(a) Dimensions of model.

Figure 2. - Multijet configuration.

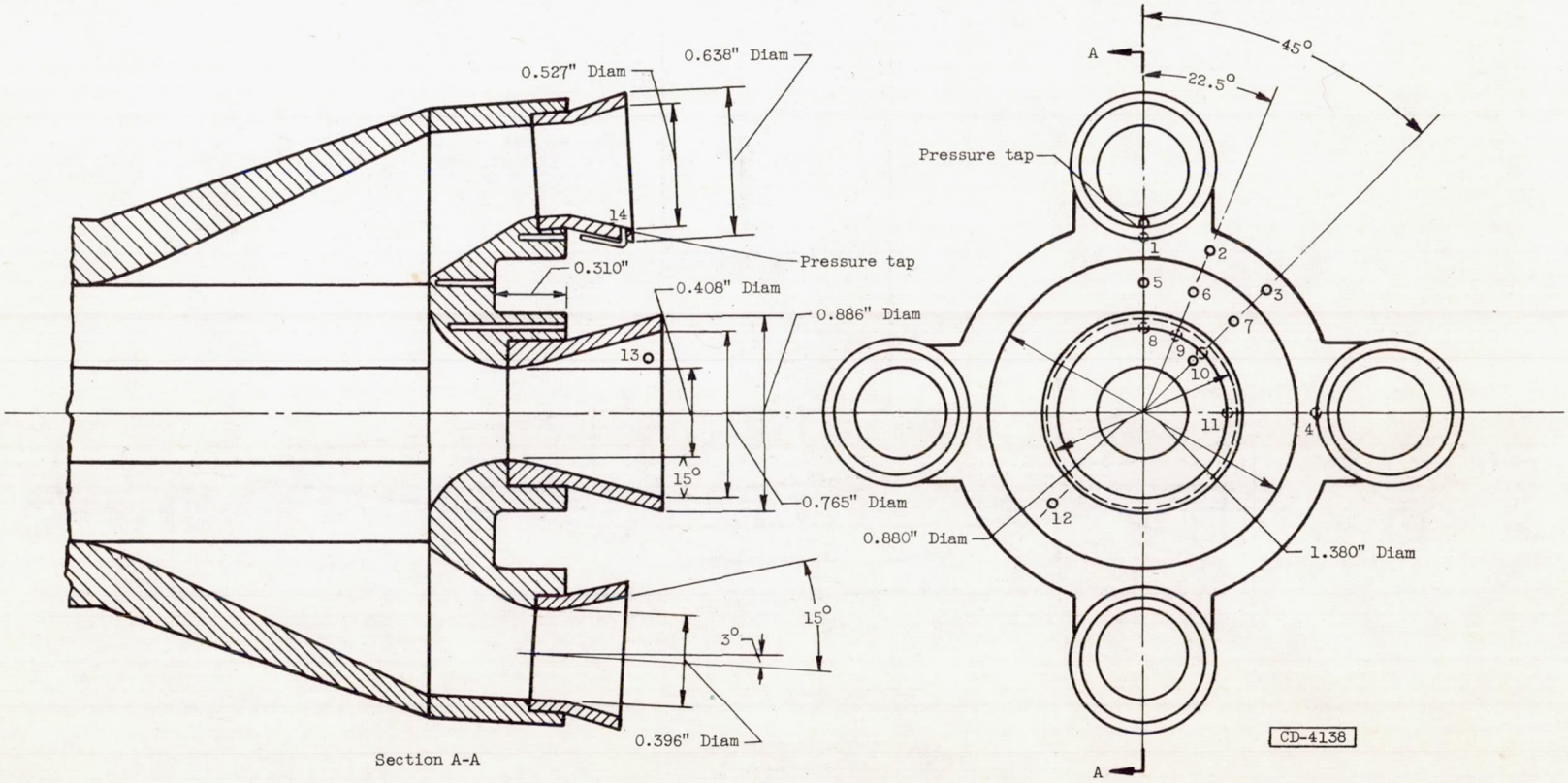

(b) Nozzle detail and instrumentation.

Figure 2. - Continued. Multijet configuration.

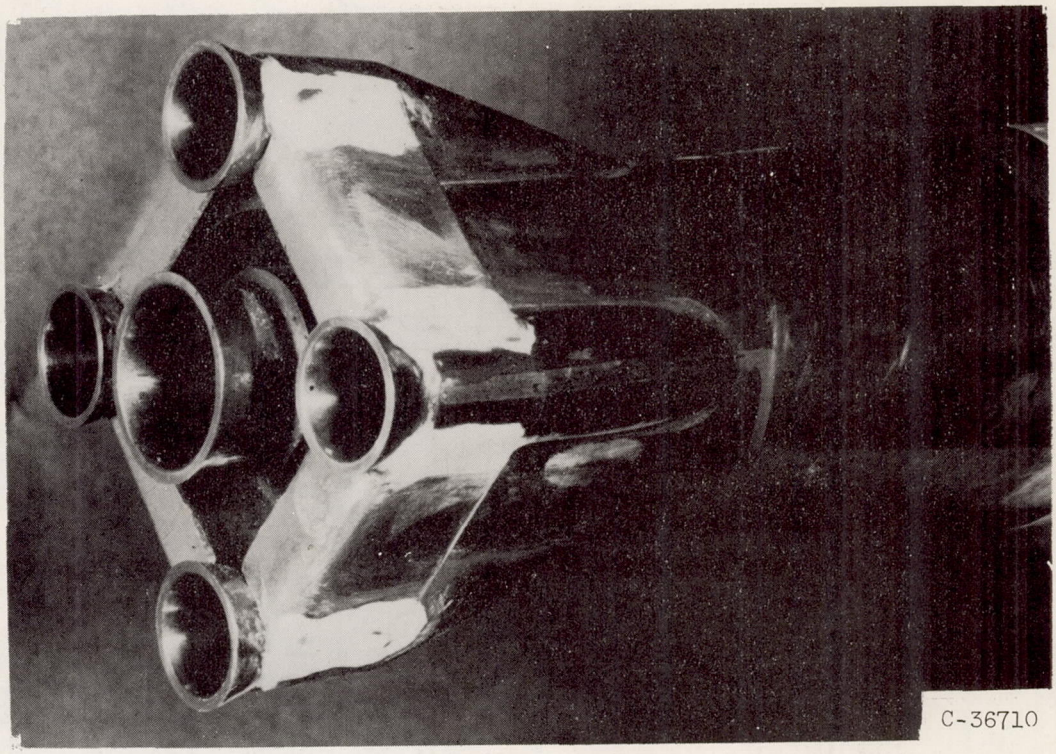

C-36710

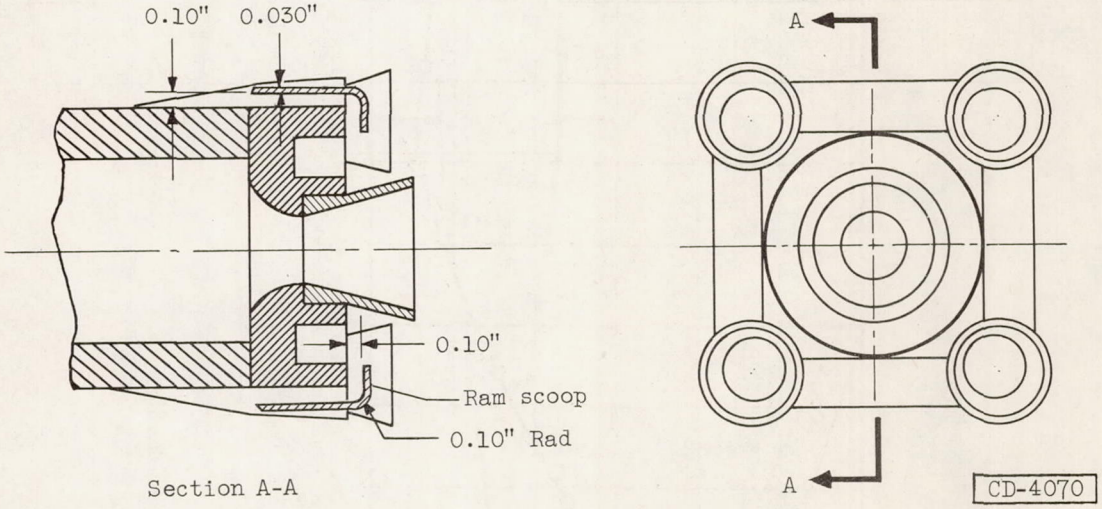

(c) Ram scoops.

Figure 2. - Concluded. Multijet configuration.

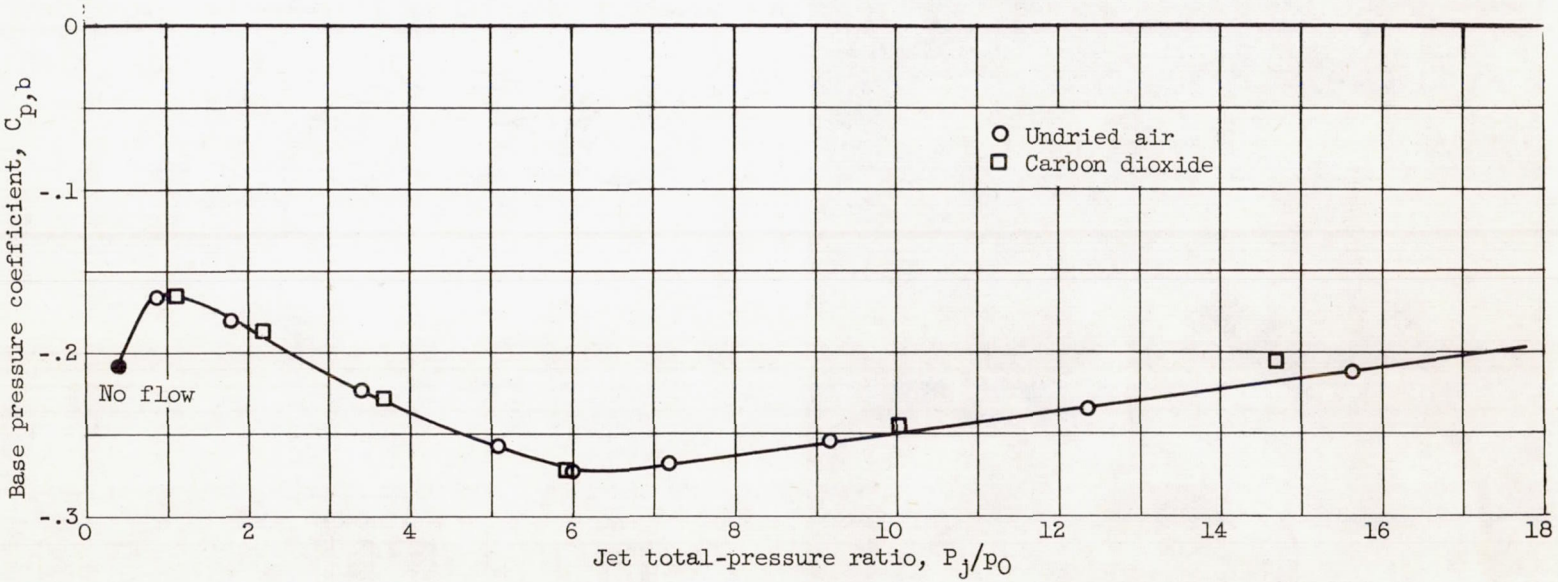

Figure 3. - Jet effect on base pressure.

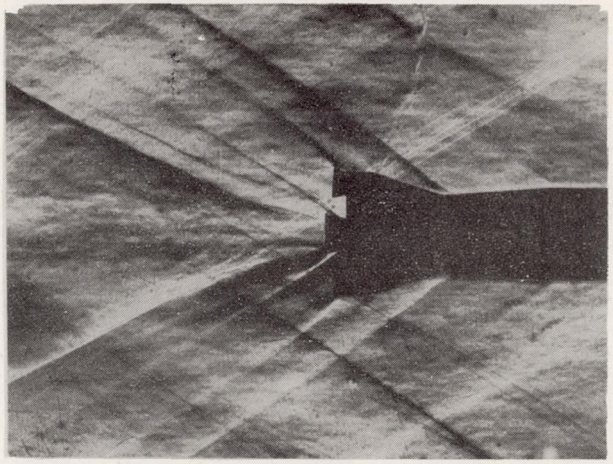

No jet flow; jet total-pressure ratio, 0.41.

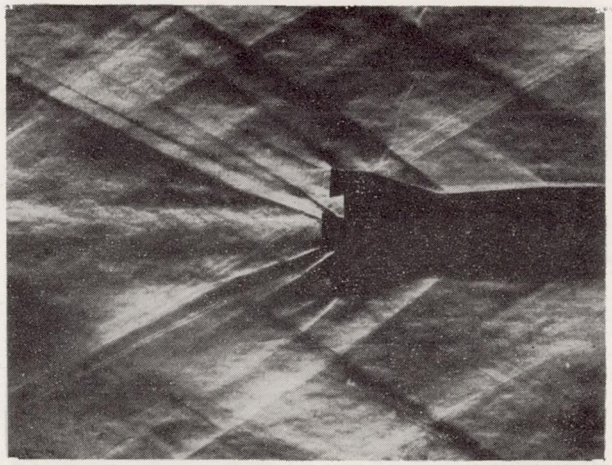

Jet total-pressure ratio, 1.78.

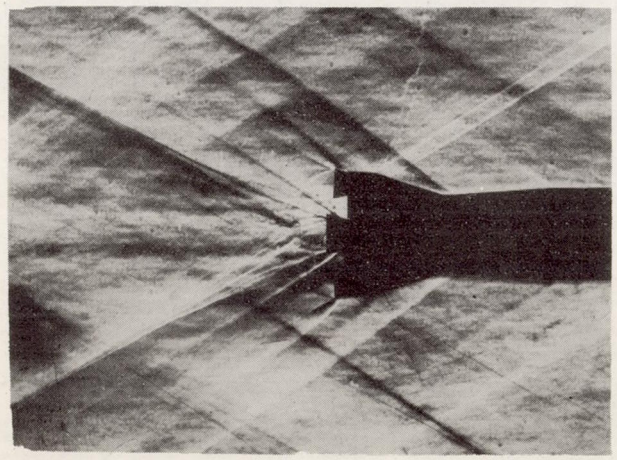

Jet total-pressure ratio, 5.98.

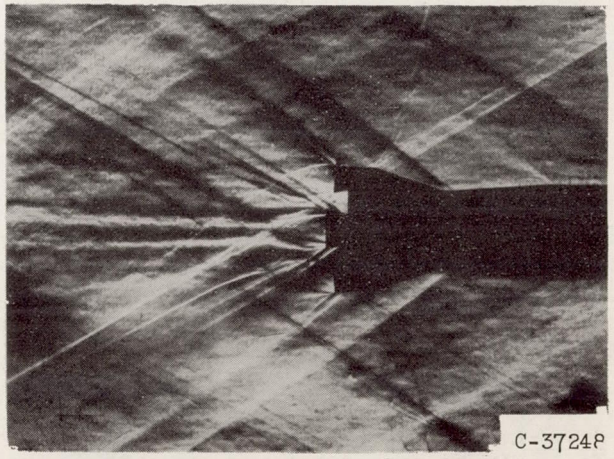

Jet total-pressure ratio, 15.58.

Figure 4. - Schlieren photographs at various jet total-pressure ratios.

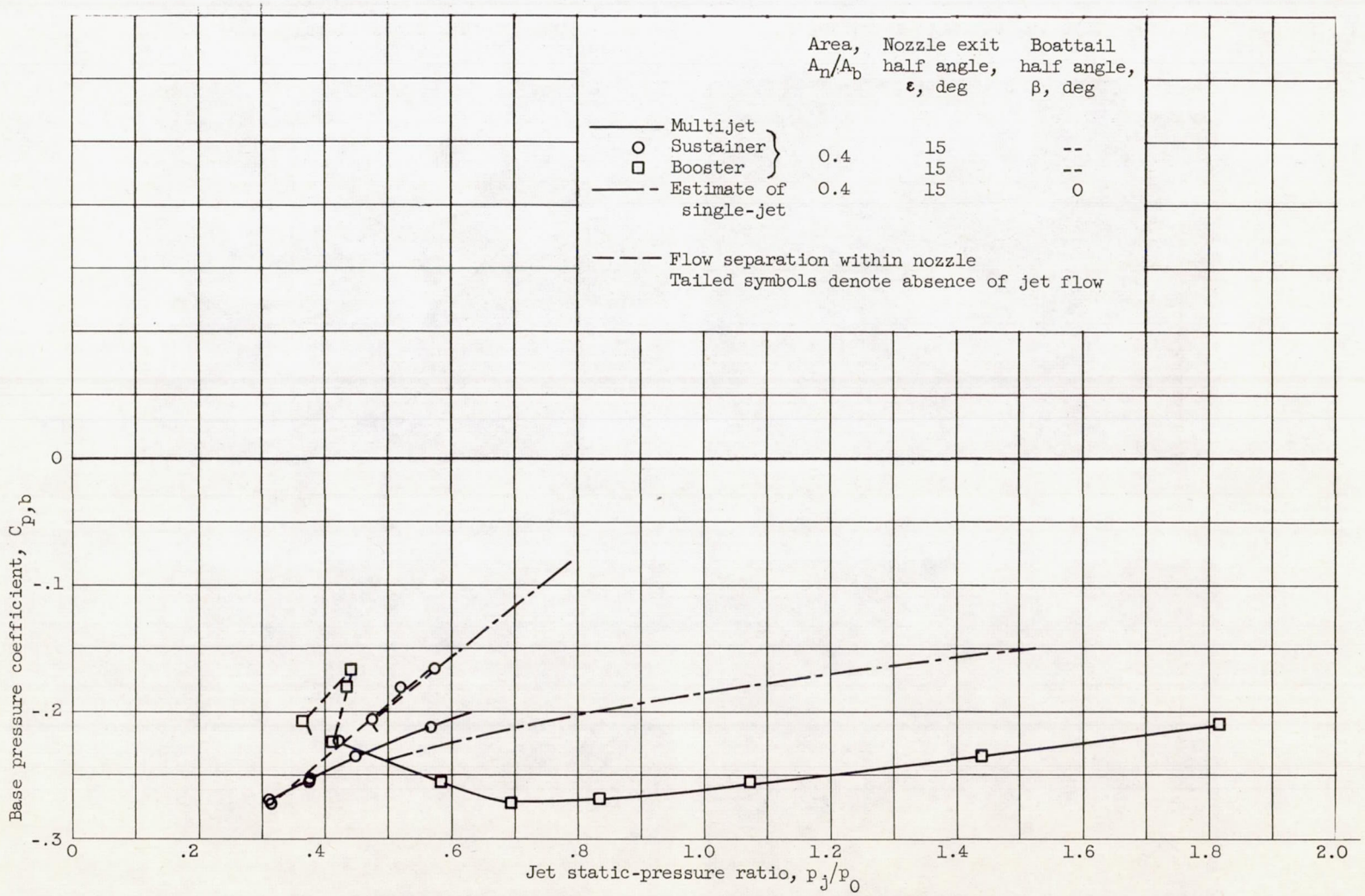

Figure 5. - Correlation of multijet with single-jet effects.

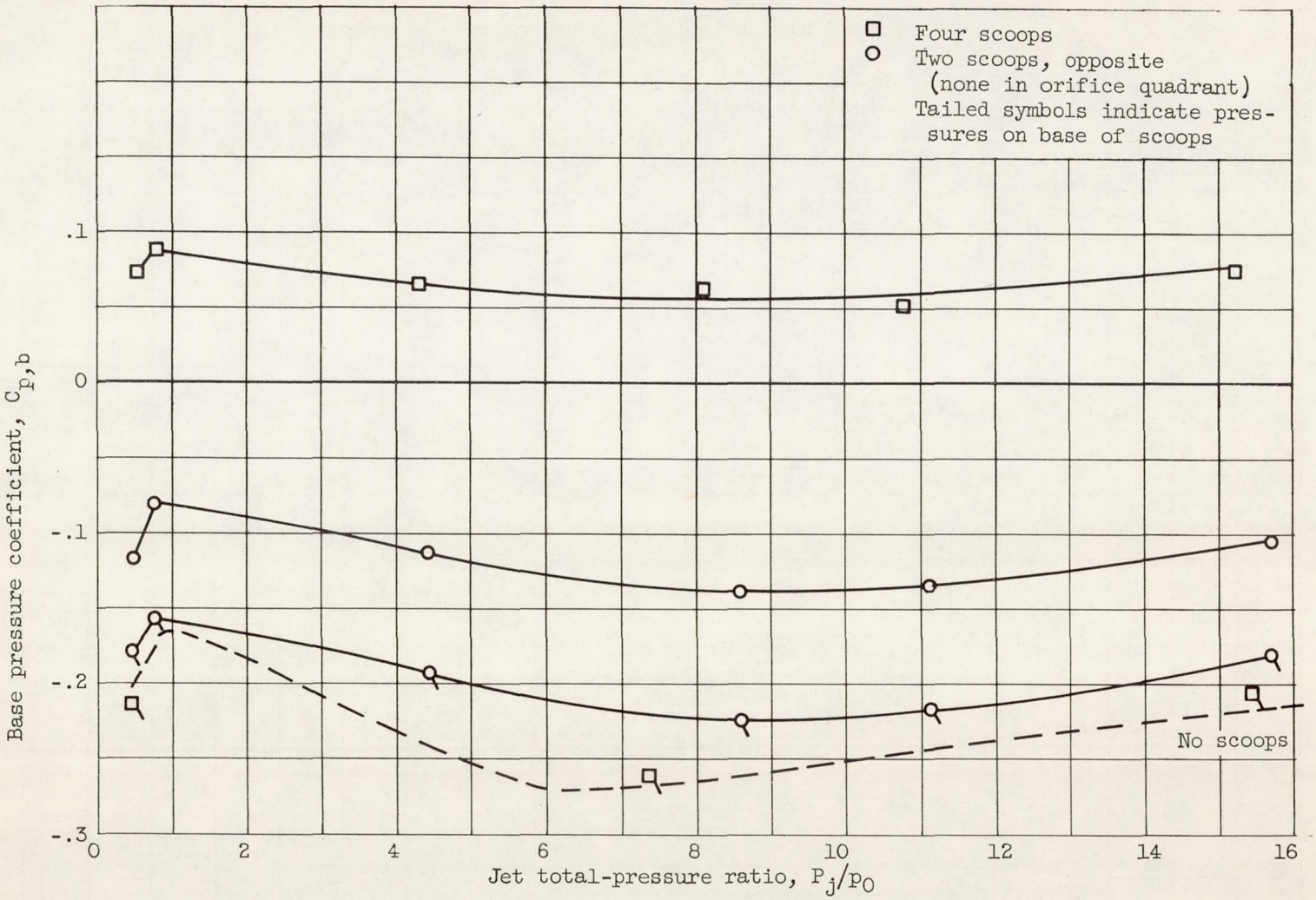

Figure 6. - Effect of scoops on base pressure. (A curve was not faired through the three points for the pressures on the base of the 4 scoops.)

NACA-Langley - 3-3-55 - 350