N 62 63069

NACA

RESEARCH MEMORANDUM

EFFECTS OF SEVERAL GEOMETRIC VARIABLES ON INTERNAL PERFORMANCE OF SHORT CONVERGENT-DIVERGENT EXHAUST NOZZLES

By Fred W. Steffen, H. George Krull, and Ralph F. Schmiedlin

Lewis Flight Propulsion Laboratory
Cleveland, Ohio

NATIONAL ADVISORY COMMITTEE
FOR AERONAUTICS
WASHINGTON

February 18, 1955
Declassified February 10, 1959

NATIONAL ADVISORY COMMITTEE FOR AERONAUTICS

RESEARCH MEMORANDUM

EFFECTS OF SEVERAL GEOMETRIC VARIABLES ON INTERNAL PERFORMANCE OF SHORT CONVERGENT-DIVERGENT EXHAUST NOZZLES

By Fred W. Steffen, H. George Krull, and Ralph F. Schmiedlin

SUMMARY

An investigation was conducted to determine the effects on internal performance of several geometric variables that were intended to produce a short, high-performance convergent-divergent nozzle. Variations in the throat-contour radius, combinations of the shape of the convergent section and the throat-contour radius, divergence angle, and shape of the divergent section were investigated. It was found that shortening the convergent section by either changing its shape or decreasing the throat-contour radius had no effect on thrust coefficient. It was also found that a nozzle with a short conical divergent section had a higher thrust coefficient than a nozzle with either a stepped or contoured divergent section of approximately equal length.

For a nozzle of a given short length, it is also shown that slight improvements in performance can be obtained by decreasing the divergence angle and operating with the nozzle underexpanded. This same design procedure also enables the designer to choose an exit area which would minimize airplane drag with only a small amount of internal thrust variation.

CJ-1

INTRODUCTION

Short jet-engine exhaust nozzles have many advantages, such as low weight, low cooling-surface area, and possibly an increased available length for other engine components. Because net thrust is very sensitive to losses in nozzle efficiency, only very small losses in efficiency may be tolerated to achieve short length without negating the installation advantages.

One of the ways in which a short nozzle of the desired expansion ratio can be designed is by using a large divergence angle. Although length was not included as a variable, reference 1 has shown that jet-thrust losses increase as the divergence angle is increased.

The purpose of this report is to show the effects on nozzle performance of several geometric variables, including divergence angle, that were intended to produce a high-performance nozzle of short length.

The length of the convergent section was decreased by decreasing the throat-contour radius upstream of the throat and contouring the convergent section. The length of the divergent section was decreased by decreasing the throat-contour radius downstream of the throat and increasing the divergence angle. Two attempts were made to improve the performance of a short conical divergent section; namely, insertion of a step at the nozzle throat, and substitution of arbitrarily contoured divergent sections for the conical divergent section. A method is presented for selecting the divergence angle which will provide optimum performance for a nozzle of given length operating at a given pressure ratio.

Nozzle performance is presented in terms of nozzle thrust coefficients and flow parameters.

APPARATUS AND INSTRUMENTATION

Nozzles

Three nozzles were used to investigate the effects of decreasing the lengths of the convergent and divergent sections. The first of these (fig. 1(a)) had a 50° conical convergent section joined to a 30° conical divergent section by a throat that had contour radius ratios of 0.98 and 0.34 upstream and downstream of the throat, respectively. Throat-contour radius ratio is defined as the ratio of the throat-contour radius to the diameter of the nozzle throat r_c/D_t. This nozzle had a convergent-section length ratio of 0.58 and a divergent-section length ratio of 0.67. Length ratio is defined as the ratio of the length of a nozzle section (either convergent or divergent) to the diameter of the nozzle throat.

The second of these nozzles is shown in figure 1(b). Downstream of the throat this nozzle is similar to that shown in figure 1(a). The throat-contour radius ratio upstream of the throat was decreased to 0.34, and a contoured convergent section was substituted for the conical convergent section, thus decreasing the convergent-section length ratio from 0.58 to 0.48.

The third nozzle, shown in figure 1(c), is similar to the nozzle shown in figure 1(a) except that the throat-contour radius ratio was increased from 0.34 to 0.98 downstream of the throat, thus increasing the divergent-section length ratio from 0.67 to 0.77.

The nozzles that were used to demonstrate the effects of inserting a step in the divergent section are shown in figures 1(d) to 1(g). The step nozzles had divergent-wall cone angles of 6°, 12°, 18°, and 24°. Each had a 50° conical convergent section, a divergent-section length ratio of 0.448, and an expansion ratio of 1.55.

The nozzles that were used to demonstrate the effects of using concave, ogee, and convex contours in the divergent section are shown in figures 1(h) to 1(j). The contours were chosen arbitrarily. Each had a 50° conical convergent section, a throat-contour radius ratio of 0.98 upstream of the throat, a divergent-section length ratio of 0.448, and an expansion ratio of 1.55.

The conical nozzle, which is used for comparison with the step and contoured divergent-section nozzles in the section RESULTS AND DISCUSSION, is shown in figure 1(k). The important features of this nozzle are that it has a throat-contour radius ratio of 0.34 downstream of the throat (as opposed to 0.98 for the nozzles of ref. 1), a divergent-section length ratio of 0.50, an expansion ratio of 1.55, and a divergence angle of 30°.

CJ-1 back

Installation

The test rig is shown in figure 2. The nozzles were fastened to a mounting pipe that was in turn attached to a bedplate freely suspended from four flexure rods. The entire assembly was installed within a plenum chamber connected on one end to the laboratory high-pressure air supply and on the other end to the laboratory altitude exhaust system. Pressure difference across the nozzle and mounting pipe was maintained by labyrinth seals around the mounting pipe. A vent line between the two labyrinth seals and the plenum chamber decreased the pressure differential across the second labyrinth seal and prevented dynamic pressures from acting on the outside of the diffuser section. Forces acting on the nozzle and mounting pipe, both external and internal, were transmitted from the bedplate through a flexure-plate supported bell crank and linkage to a balanced air-pressure diaphragm force-measuring cell.

Instrumentation

Pressures and temperatures were measured at various stations as shown in figure 2. Pressures obtained from total-pressure rakes and wall static taps at stations 1 and 2 were used in the computation of inlet momentum and air flow, respectively. Total-pressure and total-temperature rakes were installed at station n to determine nozzle-inlet conditions. Plenum-chamber static pressure and the static pressure acting on the outside of the bellmouth inlet were obtained from

taps located along the outer surfaces of the nozzle and the nozzle mounting pipe. Inside wall static taps from nozzle throat to nozzle exit were used to measure pressure distributions in the divergent sections of the nozzles.

PROCEDURE

Performance data for all nozzles were obtained over a range of pressure ratios from well below design to about design or greater. Pressure-ratio variation was obtained by varying the exhaust pressure while the inlet pressure and weight flow were held approximately constant. Inlet pressures were about 25 pounds per square inch absolute. Unheated dry air at a temperature of about 80° F, shown in reference 1 to be sufficiently high to eliminate condensation shock, was used for the entire investigation. Symbols and methods of calculation are given in appendixes A and B, respectively.

RESULTS AND DISCUSSION

Effect of Decreasing Convergent-Section Length

Thrust coefficient C_T and weight-flow parameter $\frac{W_a\sqrt{\theta}}{A_t\delta}$ are shown in figure 3 plotted against nozzle pressure ratio for two convergent-divergent nozzles. The second of the two nozzles was shortened by decreasing the throat-contour radius upstream of the throat and by contouring the convergent section. These geometric modifications decreased the convergent-section length ratio from 0.58 to 0.48 and had no significant effect on thrust coefficient and only a slight effect on the flow parameter.

Effects of Two Methods of Decreasing Divergent-Section Length

Increasing divergence angle. - Shortening the divergent section of a nozzle by increasing the divergence angle results in increased thrust losses. The thrust variation incurred when a conical nozzle is shortened in this manner is shown in figure 4. The data were interpolated from reference 1 for a nozzle having an expansion ratio A_c/A_t of 1.55 and a throat-contour radius ratio of 0.98 downstream of the throat. For this expansion ratio, the thrust coefficient decreases from 0.973 at a divergent-section length ratio of 1.97 to 0.953 at a divergent-section length ratio of 0.546.

Decreasing throat-contour radius downstream of throat. - The thrust coefficients and weight-flow parameters for two nozzles having different throat-contour radii downstream of the throat are shown in figure 5. Decreasing the throat-contour radius ratio downstream of the throat from 0.98 to 0.34 and thus decreasing the divergent-section length ratio from 0.77 to 0.67 had no significant effect on thrust coefficient at pressure ratios at and above design and only a slight effect at pressure ratios below design. Flow parameter was unaffected.

The effect on divergent-section length of the nozzle previously shown in figure 4 ($A_e/A_t = 1.55$, $r_c/D_t = 0.98$) resulting from decreasing the throat-contour radius ratio from 0.98 to 0.34 is shown in figure 6. With the small throat-contour radius, a thrust coefficient of at least 0.953 can be maintained down to a divergent-section length ratio of 0.435.

Performance of Two Short Divergent-Section Designs of Fixed Length

Two attempts were made to design a nozzle which would fit within an envelope governed by an expansion ratio of 1.55 and a divergent-section length ratio of 0.448 but give a thrust coefficient greater than that given by a nozzle having a conical divergent section. The first attempt consisted of inserting various size steps at the throat of the nozzle to effect a change in flow area without any change in axial length. The performance of four step nozzles, each having a divergent-section length ratio of 0.448 and an expansion ratio of 1.55 but different size steps (and thus cone angles), is presented in figure 7. The performance of the 30° conical nozzle illustrated in figure 1(k) is also presented. The thrust coefficient of all four step nozzles at design pressure ratio was only 0.930 and was essentially unaffected by cone angle. The flow parameters of the step nozzles are about 4 percentage points less than that of the conical nozzle. The difference in flow parameter is caused by both the absence of a throat-contour radius upstream of the throat and by the presence of the step.

Figure 8 shows generalized pressure distribution plotted against area ratio in the divergent sections of the step nozzles as well as in the 30° conical nozzle illustrated in figure 1(k). The lower thrust of the step nozzles as compared with that of the 30° conical nozzle is caused by the lower average level of pressure in the divergent section of the step nozzles. The lower average level of pressure is caused by rapid three-dimensional expansions immediately downstream of the nozzle throat and insufficient increases in pressure towards the exit of the nozzle. The pressure rise along the divergent section results from an oblique-shock system as the flow is turned parallel to the wall. The magnitude of the pressure rise is determined by the Mach number and the

angle at which the flow approaches the wall. Furthermore, the magnitude of the pressure rise probably influences the minimum pressure level on the divergent wall. Although no pressure taps were located on the vertical surface of the step, the pressure, according to the theory of reference 2, may be assumed to be equal to the minimum pressure on the divergent wall.

The second attempt to improve the performance of nozzles having a divergent-section length ratio of 0.448 consisted of arbitrarily contouring the divergent-section walls. The performance of three arbitrarily contoured nozzles is shown in figure 9. The performance of the 30° conical nozzle illustrated in figure 1(k) is also included in figure 9. The thrust coefficients of all the contoured divergent-section nozzles are less than that of the conical divergent-section nozzle. The concave design offered the best thrust performance of the three contoured designs, but the maximum thrust coefficient was still only 0.950. Flow parameters for the contoured divergent-section nozzles and the conical nozzle were about equal.

Figure 10 shows generalized pressure distributions plotted against area ratio in the divergent sections of the contoured divergent-section nozzles as well as in the 30° conical nozzle shown in figure 1(k). Again, the thrust loss of the contoured designs as compared with that of the conical design is caused by the lower average level of pressure in the divergent section. The low average level of pressure is caused by three-dimensional expansions either at the throat, as in the case of the concave and ogee designs, or throughout the divergent section as in the case of the convex design.

Improvement of Short Conical Convergent-Divergent Nozzle Performance by Use of an Underexpanded Conical Nozzle

It has thus been shown that, for nozzles that must have short divergent sections, a conical divergent section gives the highest thrust coefficient. Small improvements in performance may be further obtained by decreasing the divergence angle while the divergent-section length is held constant and the nozzle is operated underexpanded. Performance will continue to be improved until some optimum angle is reached. Beyond this optimum angle, underexpansion losses will outweigh the gains obtained from decreasing the divergence angle.

Some results of this method as applied to nozzles having divergent-section length ratios from 0.344 to 0.693 and operating at nozzle pressure ratios of 6.7 and 9.9 are shown in figures 11(a) and (b). From figure 11(a), for instance, it can be seen that the thrust coefficient of a nozzle that has a divergent-section length ratio of 0.344 and

requires a divergence angle of 50° for complete expansion can be improved by decreasing the divergence angle to about 20° and operating underexpanded. Figure 11(a) also shows that, if a thrust coefficient of 0.97, for example, is required at a pressure ratio of 6.7, a nozzle that has a divergent-section length ratio of at least 0.639 is required.

Some of the thrust coefficient curves in figure 11 are very flat; this fact suggests that, even though performance gains obtained by this method may be small, a large range of nozzle-exit area can be used without serious internal performance losses. The magnitude of the available range in exit area can be seen from the curves of the ratio of exit area to the exit area required for complete expansion, which are also included in figure 11. A nozzle having a divergent-section length ratio of 0.508 and operating at a nozzle pressure ratio of 6.7, for example, has equal thrust coefficients at a divergence angle of either 9° or 30°. At a divergence angle of 9°, however, the nozzle-exit area is 26 percent less than that required for complete expansion. This wide range in exit area enables the designer to select an exit area that may decrease the airplane drag if the nozzle-exit area or the equipment located around the outer surface of the nozzle exit controls the nacelle or fuselage frontal area. If the exit area is not the controlling area, decreasing the exit area may, of course, result in increases in boattail or base drag and nullify any internal performance gains.

SUMMARY OF RESULTS

From an investigation to determine the effects on nozzle performance of several geometric design variables, the following results were determined:

Decreasing the length of the convergent section by decreasing the throat-contour radius and by contouring had no effect on thrust coefficient and only a slight effect on flow parameter. Decreasing the length of the divergent section by decreasing the throat-contour radius had no effect on thrust coefficient at pressure ratios at and above design and only a slight effect at pressure ratios below design; flow parameter was not affected. Decreasing the length of the divergent section by increasing the divergence angle, however, resulted in increased thrust losses. All the divergent-section geometries substituted for a short conical divergent-section geometry had detrimental effects on thrust performance.

Slight improvements in thrust performance can be obtained from a conical convergent-divergent nozzle that has a short divergent section by decreasing the divergence angle and operating with the nozzle underexpanded. Similarly, a large range of exit area with little change in

thrust coefficient may be selected by the designer, thus making it possible to choose an exit area that would also minimize airplane drag.

Lewis Flight Propulsion Laboratory
National Advisory Committee for Aeronautics
Cleveland, Ohio, December 16, 1954

APPENDIX A

SYMBOLS

The following symbols are used in this report:

A area, sq ft

$A_{e,c}$ nozzle-exit area required for complete expansion, sq ft

A_l effective pipe area under labyrinth seals, sq ft

A_t nozzle-throat area, sq in.

C_T thrust coefficient

D_t nozzle-throat diameter, in.

CJ-2

F thrust, lb

F_d resultant force on thrust cell (balanced air-pressure diaphragm force) lb

g acceleration due to gravity, 32.174 ft/sec^2

l_c length of nozzle convergent section, in.

l_d length of nozzle divergent section, in.

P total pressure, lb/sq ft abs

p static pressure, lb/sq ft abs

R gas constant, 53.3 ft-lb/(lb)($^{\circ}$R)

r_c throat-contour radius, in.

T total temperature, $^{\circ}$R

V velocity, ft /sec

W_a measured air flow, lb/sec

α divergence angle, deg

α_c divergence angle required for complete expansion, deg

γ ratio of specific heats, 1.4

δ ratio of total pressure at nozzle inlet to absolute pressure at NACA standard sea-level conditions

θ ratio of total temperature at nozzle inlet to absolute temperature at NACA standard sea-level conditions

Subscripts:

bm outside of bellmouth inlet

e nozzle exit

i ideal

j jet

n nozzle inlet

w wall

0 exhaust or ambient

1 mounting-pipe inlet station

2 air-flow measuring station

APPENDIX B

METHODS OF CALCULATION

Air flow. - The nozzle air flow was calculated as

$$W_a = \sum \left\{ \frac{p_{2,w}}{RT_n} \sqrt{\frac{2g\gamma}{\gamma - 1} \left[\left(\frac{P_2}{p_{2,w}} \right)^{\frac{\gamma-1}{\gamma}} - 1 \right] \left(\frac{P_2}{p_{2,w}} \right)^{\frac{\gamma-1}{\gamma}}} \right\} \Delta A_2$$

where P_2 is the total pressure over the incremental area ΔA_2 and γ is assumed to be 1.4.

Thrust. - The jet thrust was defined as

$$F_j = \frac{W_a V_e}{g} + A_e(p_e - p_0)$$

and was calculated by the equation

$$F_j = p_{1,w}A_1 + \frac{W_a V_1}{g} - p_{bm}A_1 + A_l(p_{bm} - p_0) - F_d$$

where F_d was obtained from balanced air-pressure diaphragm measurements. The ideally available jet thrust, which was based on measured flow, was calculated as

$$F_i = W_a \sqrt{\frac{2R}{g} \frac{\gamma}{\gamma-1} T_n \left[1 - \left(\frac{p_0}{P_n} \right)^{\frac{\gamma-1}{\gamma}} \right]}$$

where P_n is an area-weighted average total pressure at station n.

Thrust coefficient. - The thrust coefficient is defined as the ratio of the actual to the ideal jet thrust

$$C_T = F_j/F_i$$

REFERENCES

1. Steffen, Fred W., Krull, H. George, and Schmiedlin, Ralph F.: Effect of Divergence Angle on the Internal Performance Characteristics of Several Conical Convergent-Divergent Nozzles. NACA RM E54H25, 1954.

2. Kochendorfer, Fred D., and Rousso, Morris D.: Performance Characteristics of Aircraft Cooling Ejectors Having Short Cylindrical Shrouds. NACA RM E51E01, 1951.

CJ-2 back

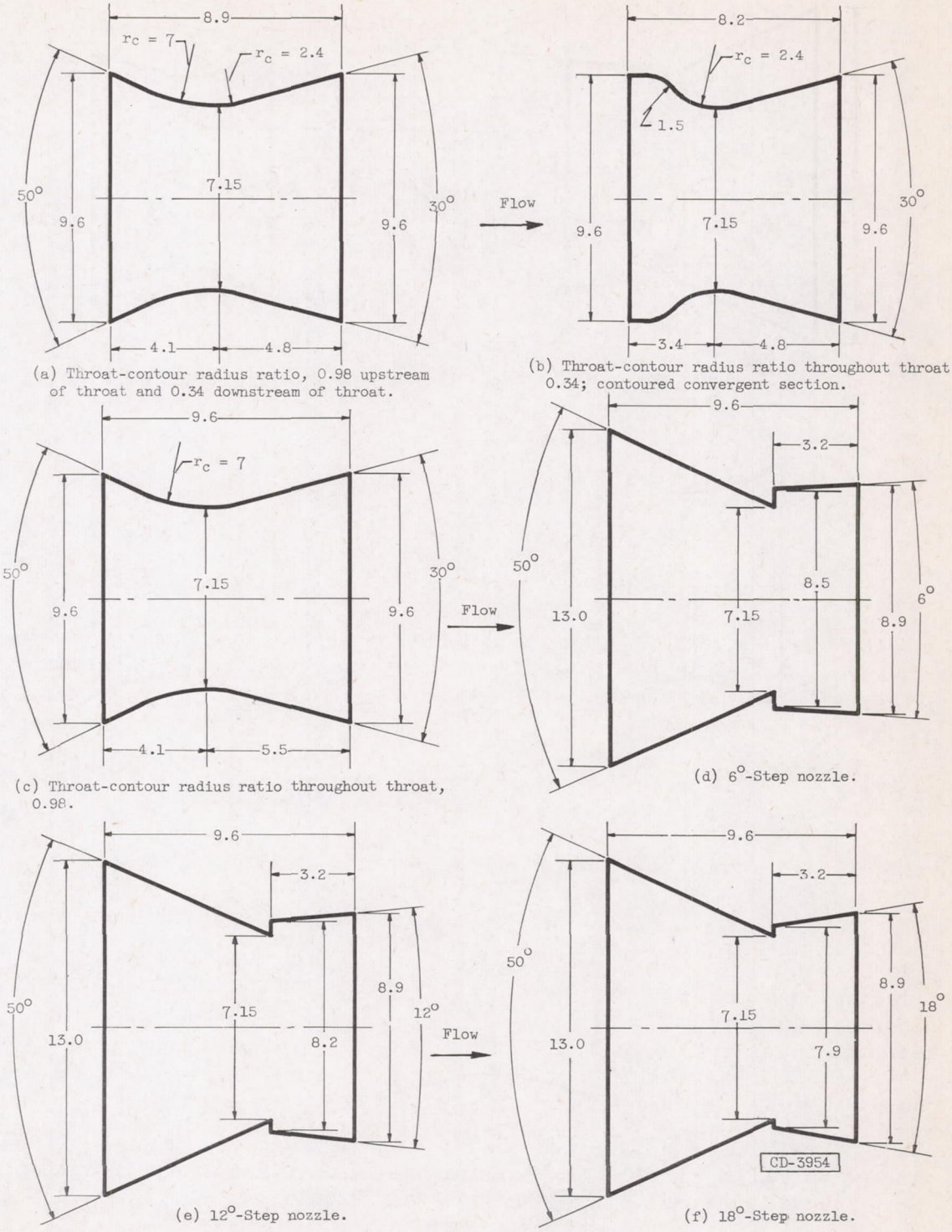

(a) Throat-contour radius ratio, 0.98 upstream of throat and 0.34 downstream of throat.

(b) Throat-contour radius ratio throughout throat, 0.34; contoured convergent section.

(c) Throat-contour radius ratio throughout throat, 0.98.

(d) 6°-Step nozzle.

(e) 12°-Step nozzle.

(f) 18°-Step nozzle.

Figure 1. - Nozzles. (All dimensions in inches.)

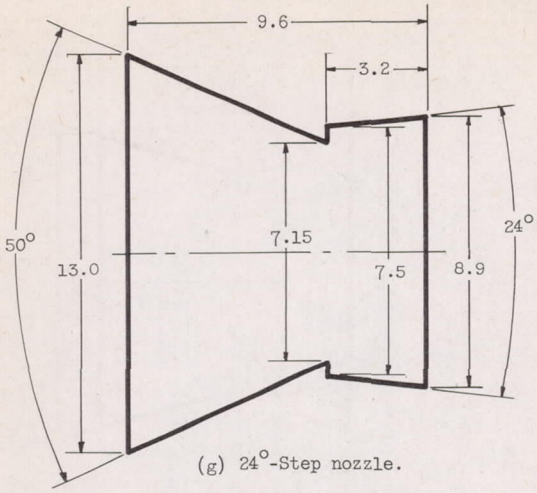

(g) 24°-Step nozzle.

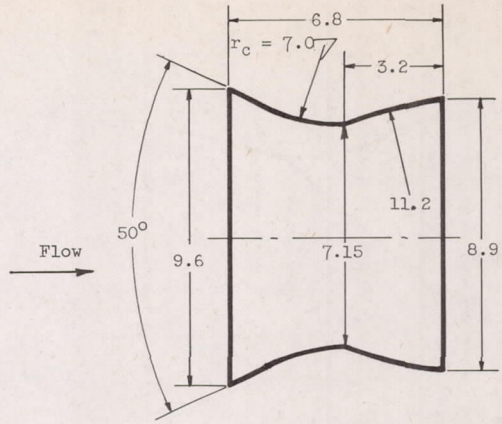

(h) Concave-contoured divergence nozzle.

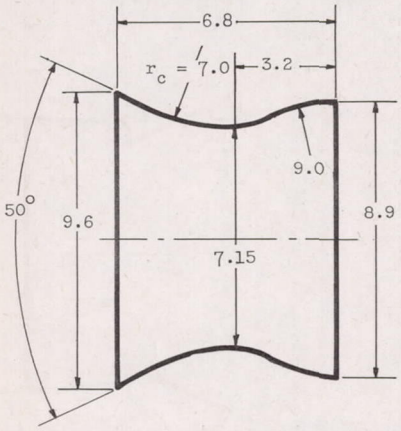

(i) Ogee-contoured divergence nozzle.

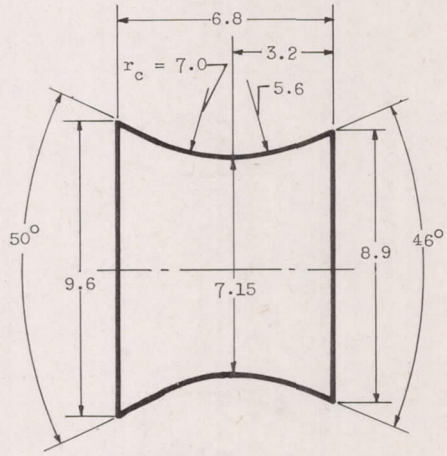

(j) Convex-contoured divergence nozzle.

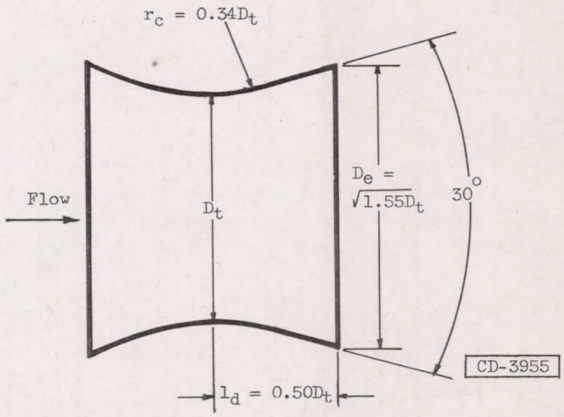

(k) 30° Conical convergent-divergent nozzle; throat-contour radius ratio downstream of throat, 0.34.

Figure 1. - Concluded. Nozzles. (All dimensions in inches.)

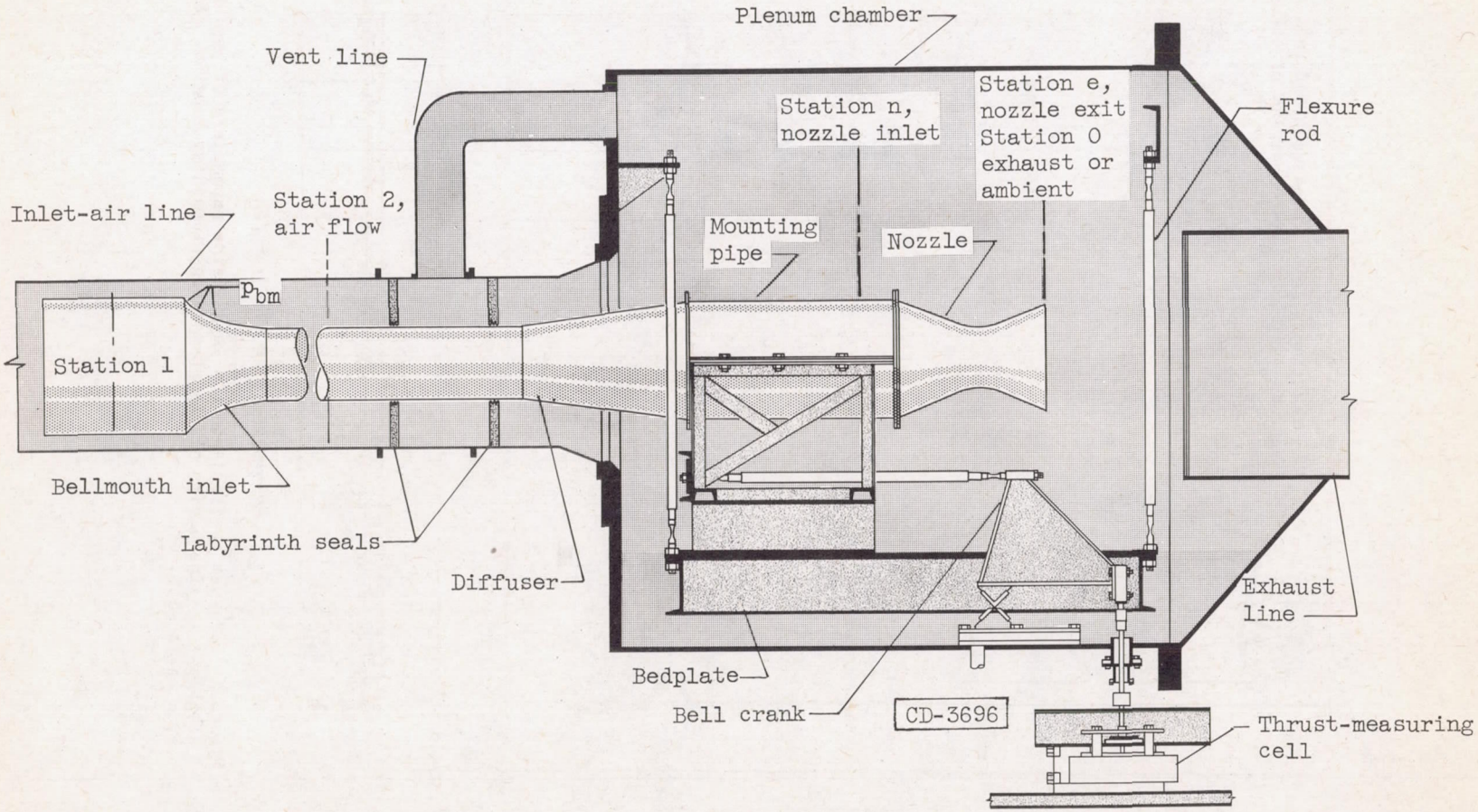

Figure 2. - Installation of nozzle in test chamber.

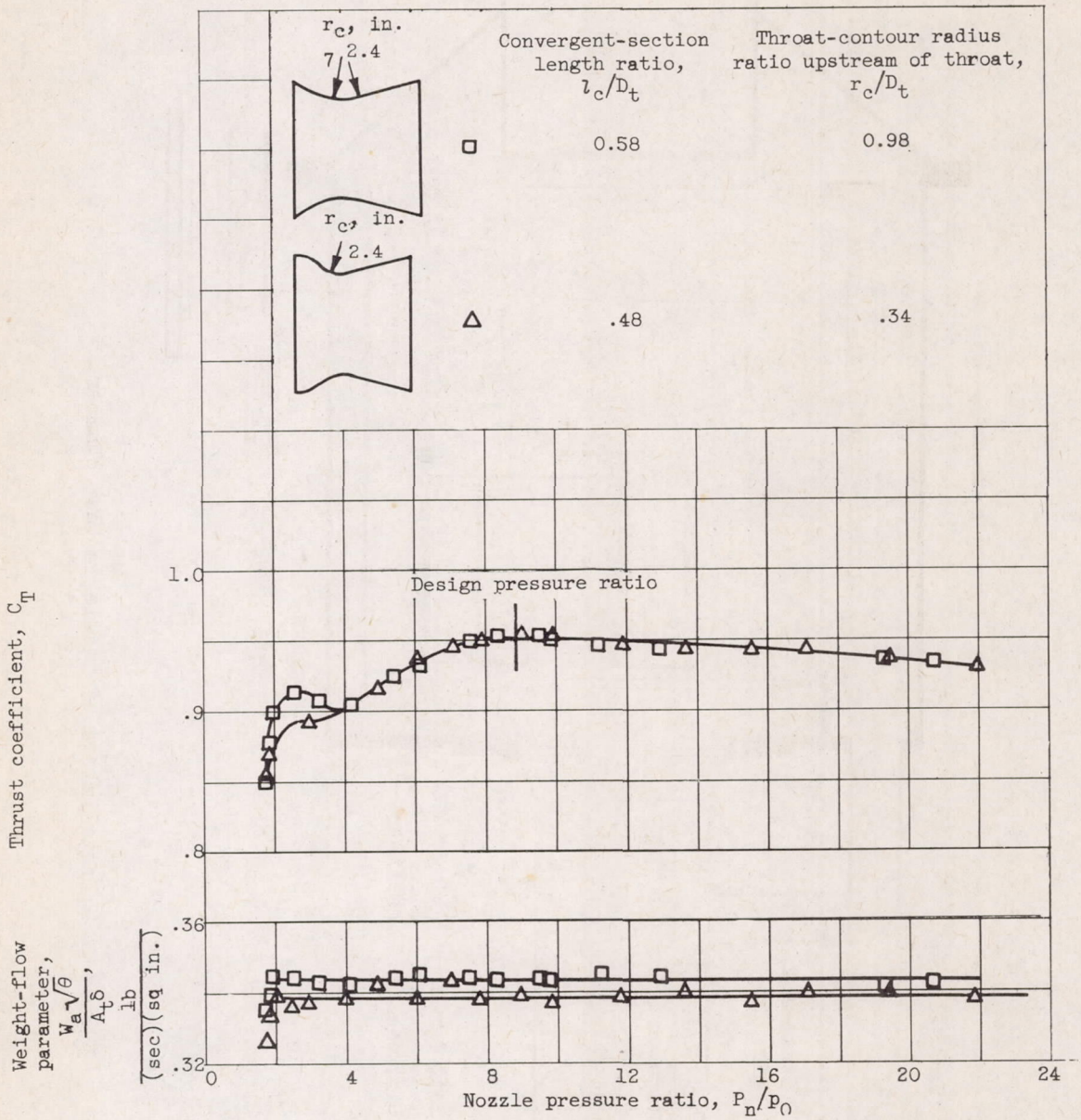

Figure 3. - Thrust coefficients and weight-flow parameters of two convergent-divergent nozzles having different convergent-section lengths. Expansion ratio, 1.8.

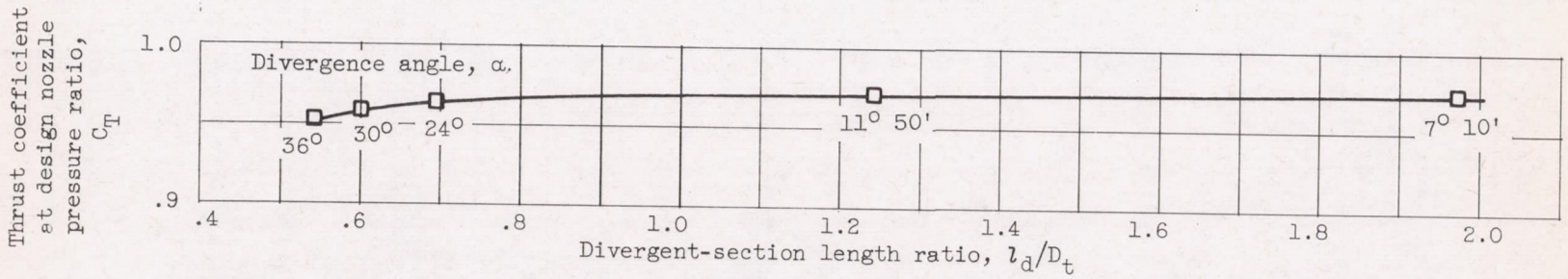

Figure 4. - Variation in thrust coefficient at design nozzle pressure ratio with divergent-section length. Throat-contour radius ratio downstream of throat, 0.98; design nozzle pressure ratio, 6.70; expansion ratio, 1.55.

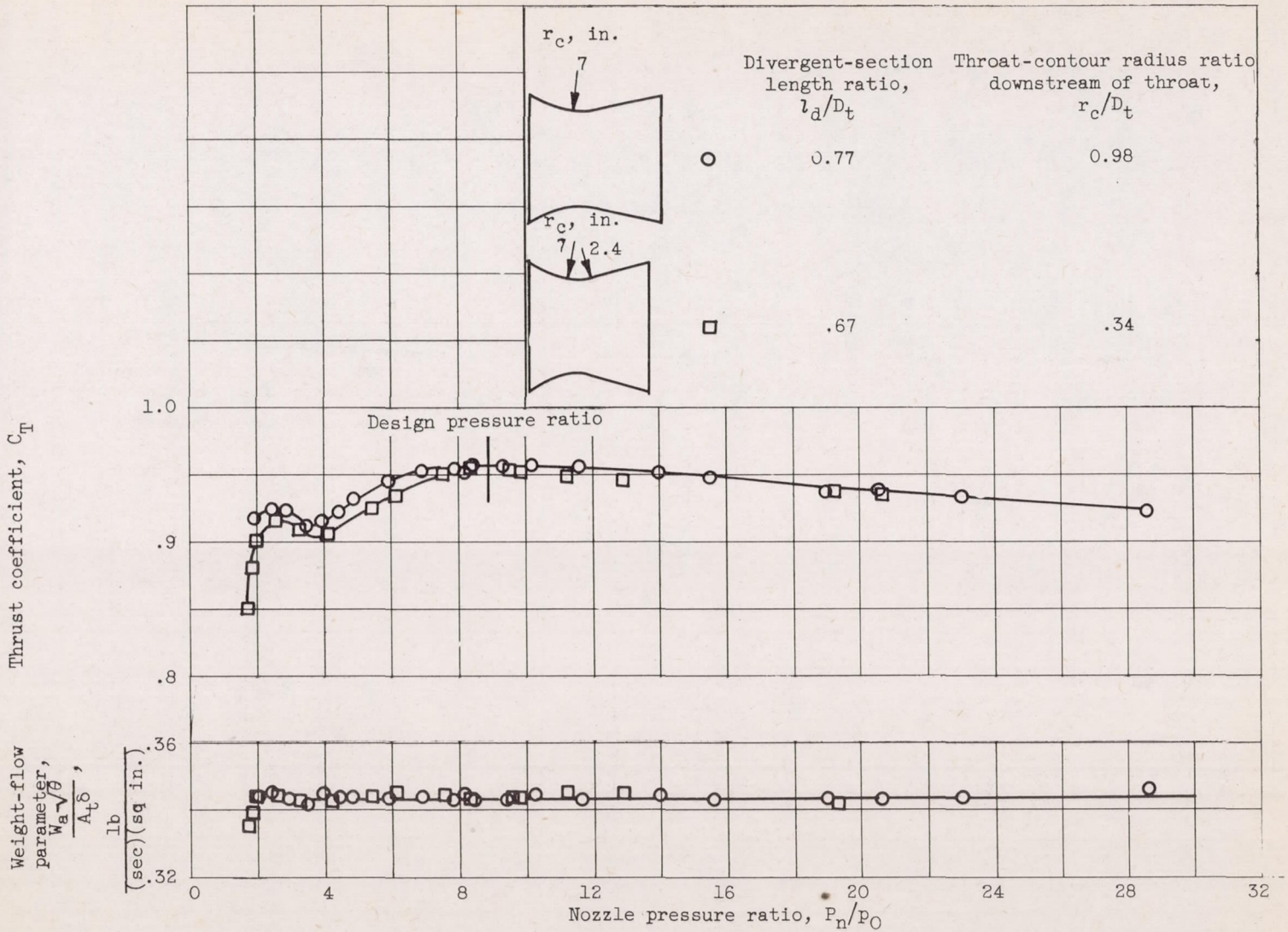

Figure 5. - Thrust coefficients and weight-flow parameters of two convergent-divergent nozzles having different throat-contour radii downstream of throat. Expansion ratio, 1.8.

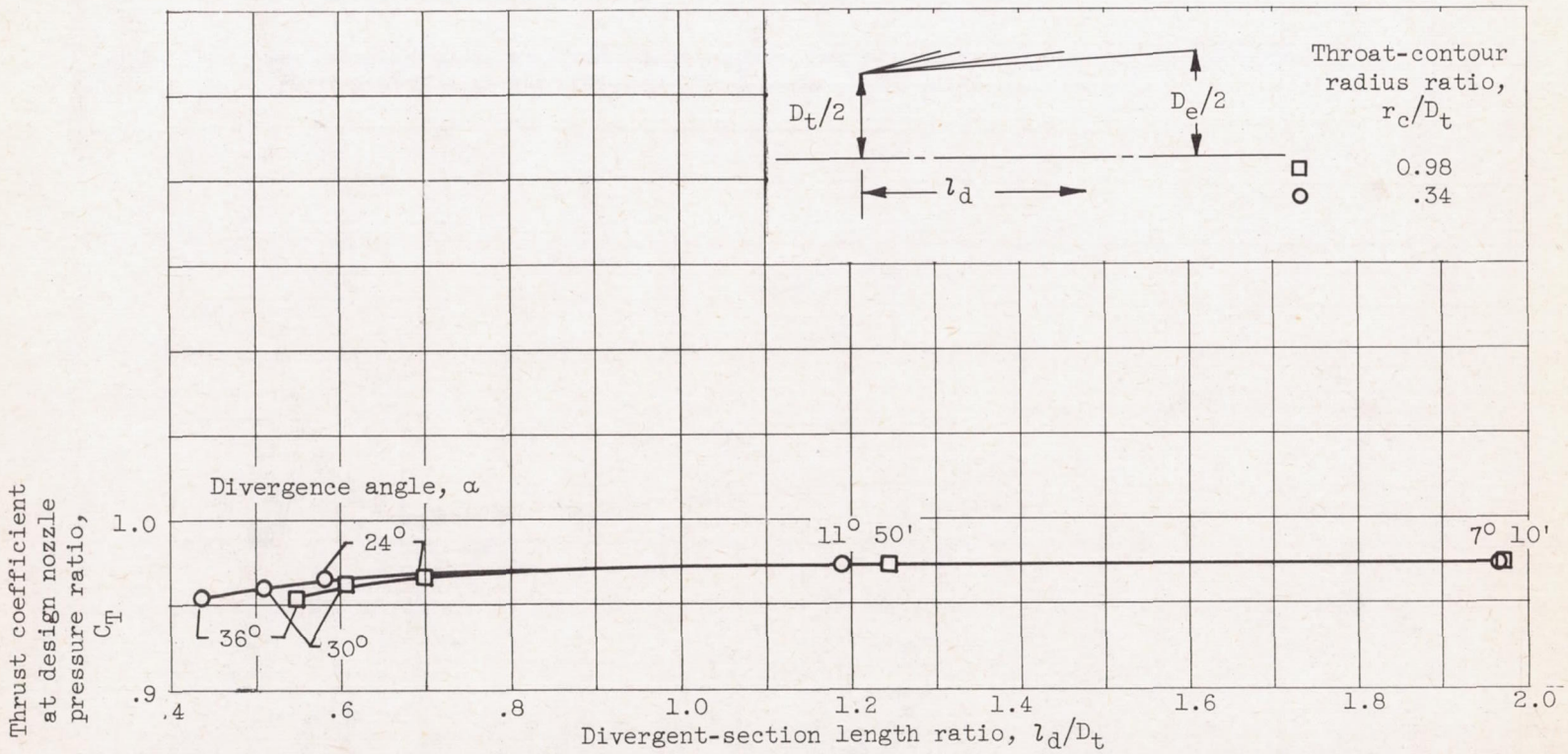

Figure 6. - Variation in thrust coefficient at design nozzle pressure ratio with divergent-section length for two nozzles having different throat-contour radius ratios downstream of throat. Expansion ratio, 1.55; design nozzle pressure ratio, 6.70.

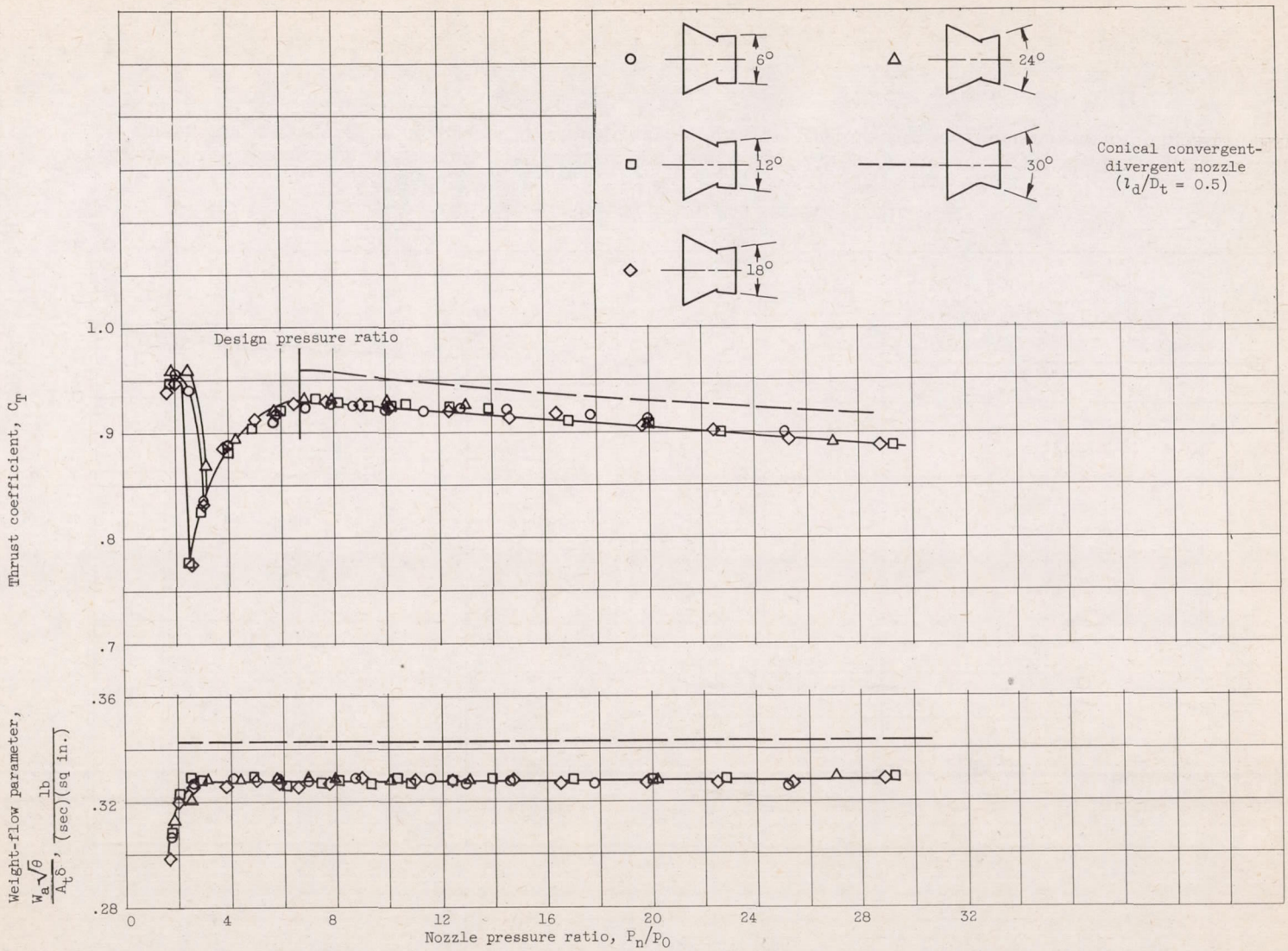

Figure 7. - Thrust coefficients and weight-flow parameters of step nozzles having various wall angles. Expansion ratio, 1.55; divergent-section length ratio, 0.448.

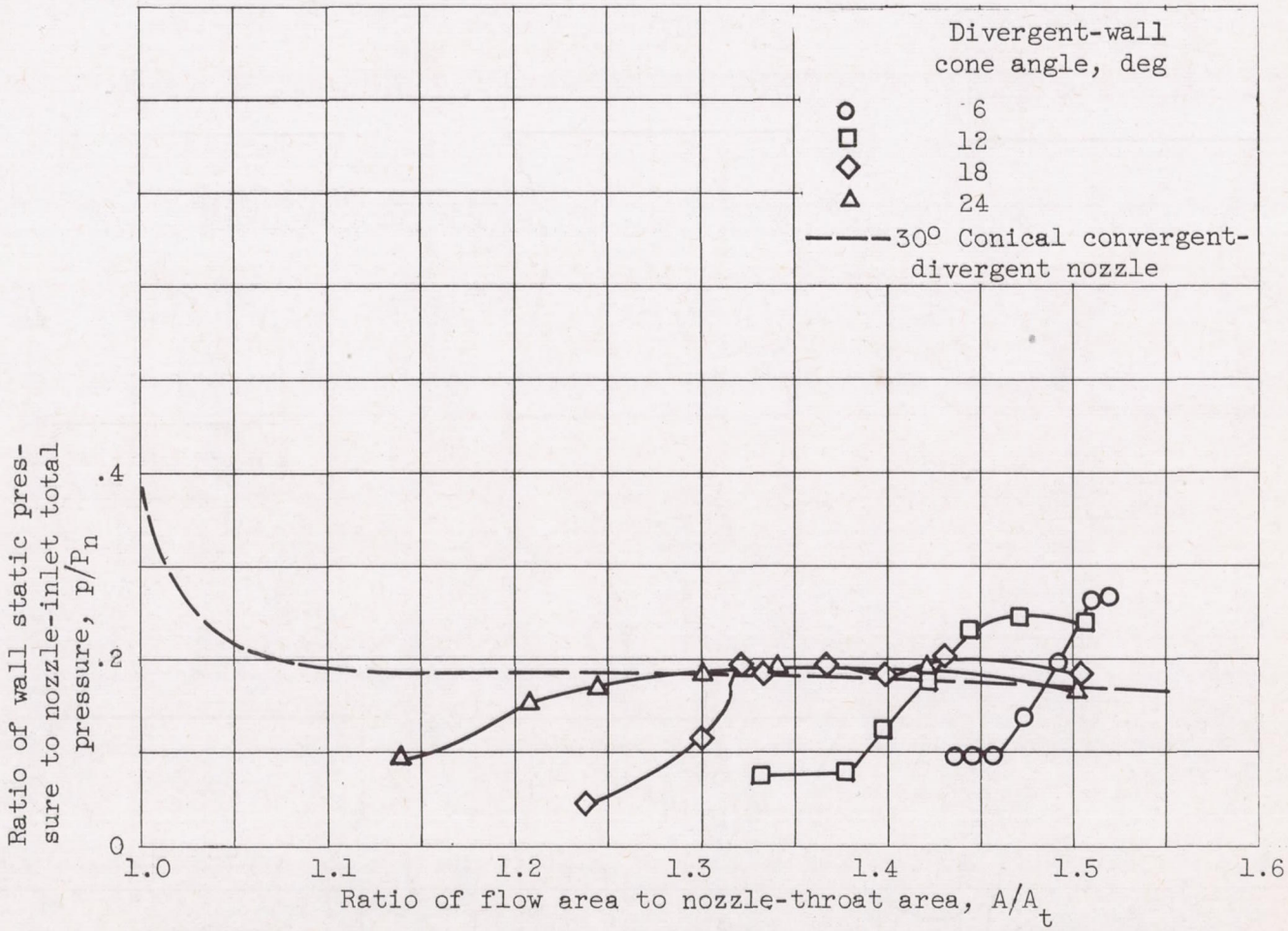

Figure 8. - Generalized pressure distributions along divergent walls of step nozzles having various wall angles at nozzle pressure ratios at or above design. Expansion ratio, 1.55; divergent-section length ratio, 0.448.

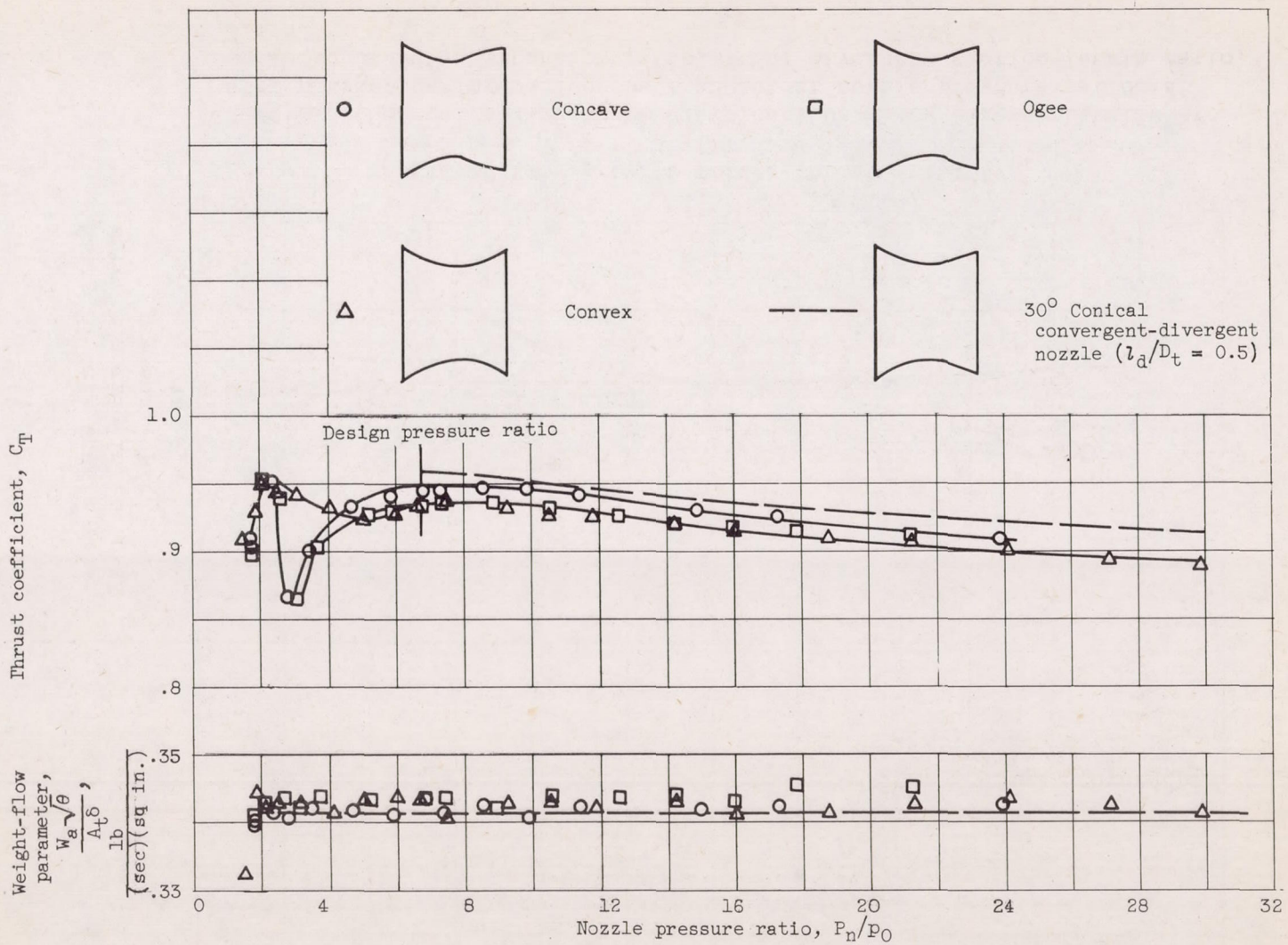

Figure 9. - Thrust coefficients and weight-flow parameters of convergent-divergent nozzles having contoured divergent sections. Expansion ratio, 1.55; divergent-section length ratio, 0.448.

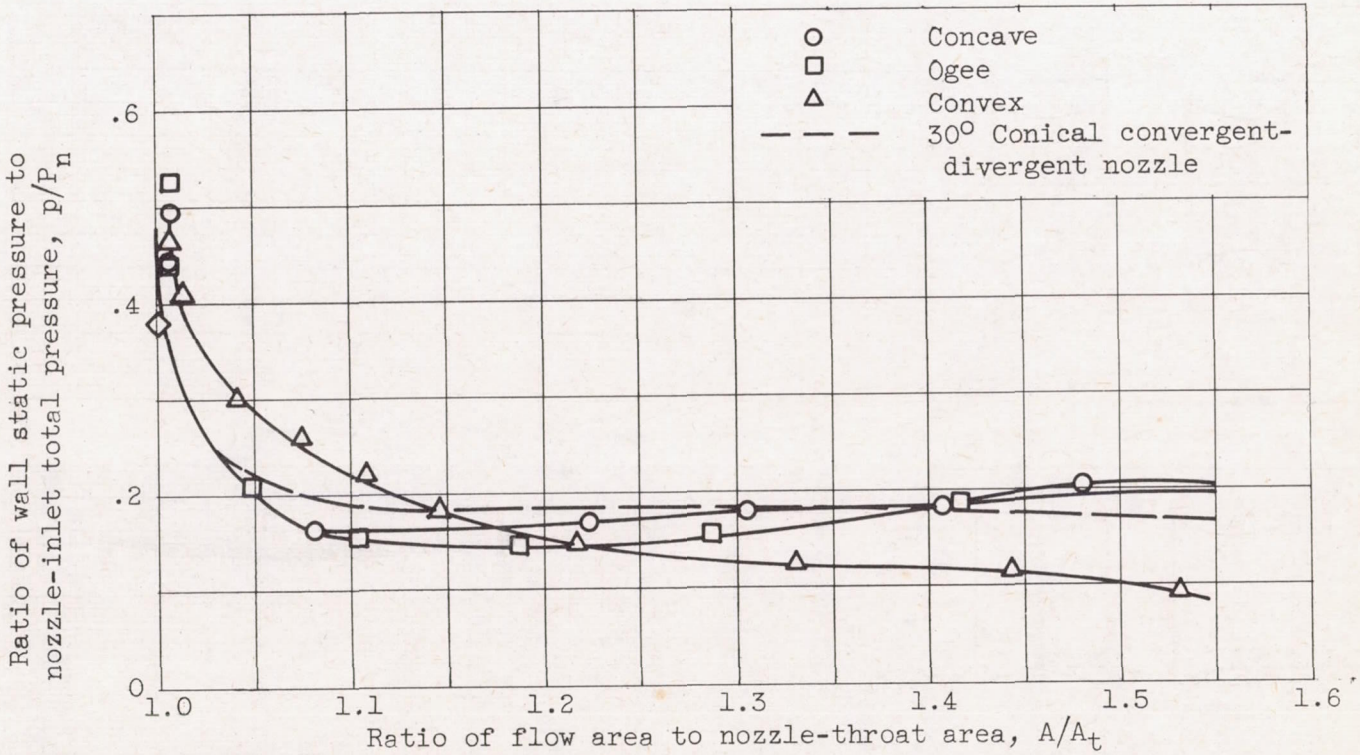

Figure 10. - Generalized pressure distributions along divergent walls of convergent-divergent nozzles having contoured divergent sections at pressure ratios at or above design. Expansion ratio, 1.55; divergent-section length ratio, 0.448.

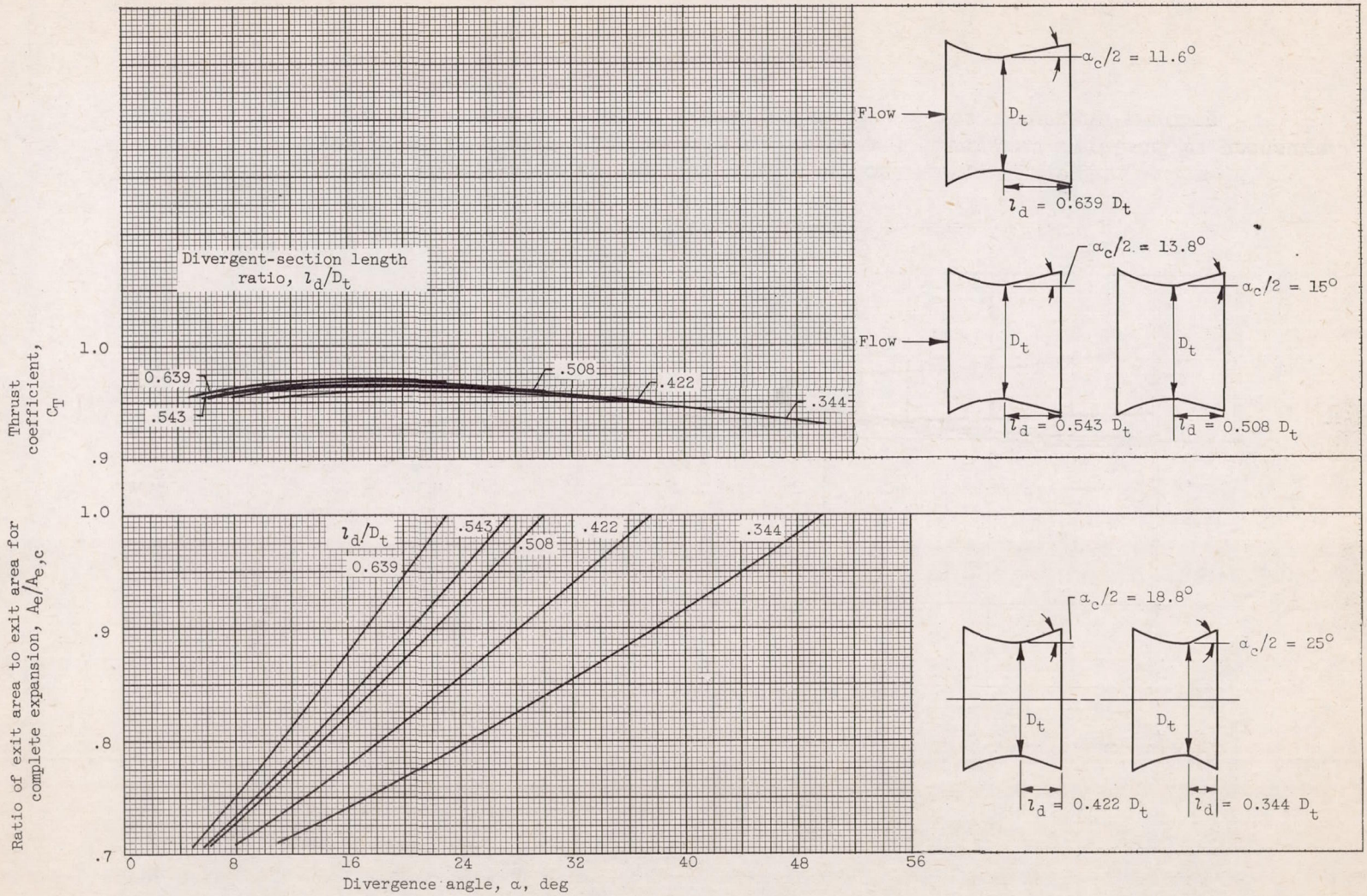

(a) Nozzle pressure ratio, 6.7.

Figure 11. - Variation in thrust coefficient and nozzle-exit area resulting from decreases in divergence angle and underexpanded operation. Throat-contour radius ratio downstream of throat, 0.34.

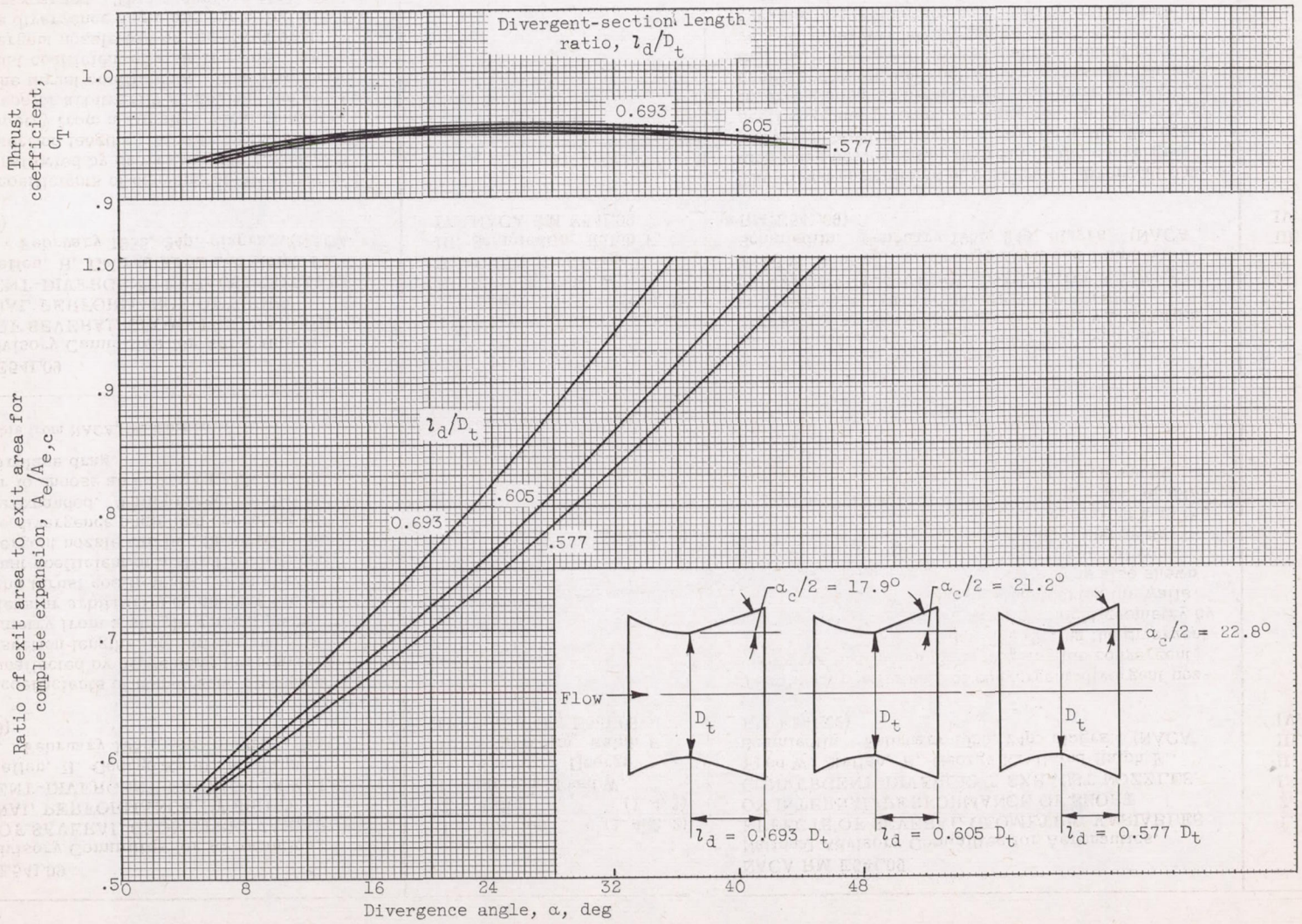

(b) Nozzle pressure ratio, 9.9.

Figure 11. - Concluded. Variation in thrust coefficient and nozzle-exit area resulting from decreases in divergence angle and underexpanded operation. Throat-contour radius ratio downstream of throat, 0.34.