FILE COPY
NO. 5

AIRCRAFT CIRCULARS

NATIONAL ADVISORY COMMITTEE FOR AERONAUTICS

No. 10

A NEW DE HAVILLAND COMMERCIAL AIRPLANE

The D.H.66 with Three Bristol "Jupiter" Engines

FILE COPY
To be returned to
the files of the National
Advisory Committee
for Aeronautics
Washington, D. C.

Washington
July, 1926

NATIONAL ADVISORY COMMITTEE FOR AERONAUTICS.

AIRCRAFT CIRCULAR NO. 10.

A NEW DE HAVILLAND COMMERCIAL AIRPLANE.*

The D.H.66 with Three Bristol "Jupiter" Engines.

The new De Havilland airplane, type D.H.66, which is now in course of construction at the Stag Lane works of the De Havilland Aircraft Company, marks a considerable departure in several respects from normal De Havilland practice. Thus in place of the all-wood plywood-covered fuselage, which has characterized practically all De Havilland airplanes for a great number of years, the new three-engined airplane being built for Imperial Airways, Ltd., has a fuselage of all-steel construction as regards its main structure (Fig. 1). The wings, on the other hand, are of normal De Havilland construction with box spars of wood and spruce ribs (Fig. 3).

The Fuselage

Although the De Havilland Aircraft Company has by this time had considerable experience in metal construction, it has not hitherto been possible to illustrate these forms of construction, as the airplanes so built have not been commercial airplanes, and so have not been available for detail illustration. That being so, it is thought to be of interest to illustrate in considerable detail the particular form of tubular construction employed

*From "Flight," June 10, 1926.

in the D.H.66, and consequently several of the sketches show various joints between struts, longerons, landing gear struts and wing roots as used in this construction (Fig. 4). The fuselage main structure is of the rectangular section type, and the longerons do not run right through from nose to stern, but are divided at various points along their length, in places where a number of members meet. A feature of the construction is that the steel struts and longerons are in most places provided with duralumin ends shaped to suit local requirements and generally either in the form of forked or plain ends for pin joints. The cross-bracing is by circular section tie-rods, and in certain panels where the stresses are exceptionally heavy these tie-rods are duplicated. The attachment of vertical and horizontal struts to the longerons is normally by clips bent around the longerons and pinned to them. The longerons are formed by sections of straight tubes, so that the contour of the fuselage is not formed by curves but by a series of straight lines at varying angles. This, of course, is usual with tubular construction, as it avoids the trouble and expense of bending the tubes, and the effect upon the head resistance of the fuselage is probably negligible.

At the stern the fuselage does not terminate in a vertical stern post as is usually the case, but ends in a fairly wide flat panel. This form of construction is due to the fact that the D.H.66 is provided with a biplane tail which, in order to

allow for trimming the stabilizer is built up as an independent unit, hinged to the top longerons at the corners of the last bay. The stabilizer trimming gear is enclosed in a casing which serves to streamline the rear portion of the fuselage, but which is not a part of the main structure.

In front the fuselage tapers fairly abruptly to a very small engine plate for the central "Jupiter" engine. The engine plate itself is made of duralumin and appears to be extremely light. It is attached to the steel tube longerons by four large bolts, and the engine is thus readily removable. The front panel of the main fuselage is triangulated by steel tubes, and in the case of two of these tubes, tie rods run parallel with the tubes, although the latter are working in tension. The engine mounting is shown in Fig. 2, and some of its details are illustrated by sketches (Fig. 4), which should make the arrangement quite clear. The mounting is very clean, and leaves ample space for getting at the components mounted on the back of the engine.

One of the disadvantages of the steel tubular fuselage of the type of the D.H.66, is that the cabin has to be built up in the form of a three-ply "box" slipped into the fuselage from the top when the latter has been erected. The floor of the cabin has fairly stout cross members underneath, but these stop short inside the bottom longerons, and the cabin "box" is supported at the corners only, so as to avoid placing bending stresses on the

lower longerons due to the weight of the cabin and its contents. The actual supports under the corners of the cabin are in the form of wood blocks, shaped to fit over the top of the cross tubes in the bottom panel of the fuselage, so that all the stresses are concentrated very close to the joints and the bending moments imposed are a minimum.

As the De Havilland type 66 is intended for use on the Cairo-Baghdad line which it is hoped to open next spring, the whole of the cabin space will probably not be devoted to passenger accommodation, and at the moment we understand it is intended to provide seats for seven passengers only, the rest of the space available (465 cu.ft.) being intended for goods and mails. Should it later be desired to use the airplane entirely for passenger-carrying, a number of extra seats would, of course, be fitted.

Aft of the cabin is another "box" of plywood which forms the luggage compartment. Vertical strips of wood of semicircular section are tacked to the cabin in order to protect and stiffen the plywood against accidental damage by heavy luggage. The compartment is a large one (155 cu.ft.) and should be ample for the amount of personal luggage likely to be required for seven passengers. It is provided with a separate door.

In the general arrangement drawings (Fig. 5) will be seen a peculiar funnel projecting from the roof of the fuselage. This is a ventilator which, owing to the speed of the airplane,

will force air into a diffuser box from which in turn, fresh air will filter into the cabin without causing a draught. Details of the ventilating arrangement cannot be given at the present time.

The Wings

As already mentioned, the wings of the D.H.66 are of perfectly normal construction, with box spars having plywood walls and spruce flanges (Fig. 6). At the points where occur the attachments for the interplane struts, internal packing pieces are introduced and the form of these is illustrated, from which it will be seen that these distance pieces are built up from multi-ply spruce. The ribs are of spruce and are of the same type as has been used by the De Havilland Aircraft Company in a great number of their types during recent years. The wing section used is R.A.F.15. The wing covering is fabric, doped and varnished in the usual manner. Leading and trailing edges are in the form of duralumin tubes, but with the exception of these and the internal drag bracing, the wings are of all-wood construction. Owing to the fact that two wing engines are mounted on the lower wing, the construction has been somewhat altered at the points where these two engines are mounted. From one of our sketches (Fig. 3) which illustrates the framework carrying one of the wing engines, it will be seen that the lower wing incorporates at this point a system of triangulation formed by the front spar and two stout box ribs, the apex of the triangle

falling on the rear spar. A result of this triangulated engine support is that the end rib of this section of the wing has a fairly pronounced rake. (The outer portion of the wing is, of course, raked at its inner end to the same angle.) The engine plate itself is bolted to this triangular structure and the front spar.

The Tail

One of the unusual features in the design of the D.H.66 is the tail unit. This comprises a biplane tail with a single elevator hinged to the lower stabilizer only, and of three vertical fins and three rudders. The tail unit is built in two symmetrical halves in order to reduce the number of spares necessary. Thus a spare fin can be used either in the central portion or in one of the two outer positions, and the same applies to the rudders. Equally, the two halves of each of the stabilizers are identical, so that a spare for either can be used at will on the port or starboard side.

Another unusual feature of the tail design is the method adopted for trimming the tail. Owing to the rigidly-braced biplane structure, the usual tail trimming gears could not well be employed, and in place of this the designers of the D.H.66 have adopted a system which is similar in principle to, although quite different in detail from, the trimming gear patented by the Westland Aircraft Works. The lower stabilizer is hinged to the main fuselage at the rear ends of the top longerons, and is

braced by an inverted pyramid of steel tubes meeting at a point in line with the lower surface of the fuselage. A worm gear is interposed between the fixed portion of the fuselage and the apex of this inverted pyramid, so that when the worm gear is rotated the top of the pyramid is brought closer to or farther away from the fixed fuselage structure, according to the direction of rotation. The tail-trimming gear, steel-tube pyramid, etc., are enclosed in a light casing, which serves to fair off the rear portion of the fuselage, and means are provided for covering up the gap between the fixed and moving parts when the tail is trimmed to its smallest angle of incidence.

The Landing Gear

The landing gear is of conventional type, with bent axles and V supporting struts, of which the front ones are telescopic and contain the usual rubber blocks working in compression. Generally speaking, the landing gear is similar to that of the D.H.54.

The Power Plant

Reference has already been made to the mounting of the three Bristol "Jupiter" engines, and to the illustrations showing the engine plate for the central engine and the wing structure supporting the engine plates of the wing engines. A reference to the front elevation of the airplane will show that by so arranging the design, that the central engine is considerably

above the level of the wing engines, it has been possible to avoid overlapping of the propeller discs without placing the wing engines excessively far out from the fuselage. Experience with three-engined airplanes seems to show that flutter and vibration are apt to occur when the propeller discs overlap, and in the D.H.66 there should be no trouble on this score, as the slipstreams should clear one another by a considerable margin.

The main gasoline tanks are placed in the center section of the top wing so as to give direct gravity feed to the engines, with consequent simplification of the gasoline system. As the airplane is required to have a rather large cruising radius, the fuel capacity is high, i.e., 300 gallons, and in contemplating the airplane from the point of view of paying load carried, this fact should be kept in mind, as the gasoline and oil to be carried account for no less than 2500 lb. of the disposable load.

Certain other features of the D.H.66 are worthy of a closer study, but it is preferred to defer a reference to these until a later date. No performance figures are available at present, but the following figures of weight, etc., may be of interest. The weight of the airplane empty is 9060 lb. The weight of fuel and oil is 2500 lb., and of pilot and navigator 360 lb., leaving a paying load of 2260 lb. As the total loaded weight of the airplane is estimated at 14,700 lb., there is an item of 520 lb. not accounted for. This weight is believed to be represented

by instruments, cabin equipment, etc., which are not included in the figure for empty weight. As the wing area is 1556 sq.ft., the wing loading is 9.57 lb./sq.ft.

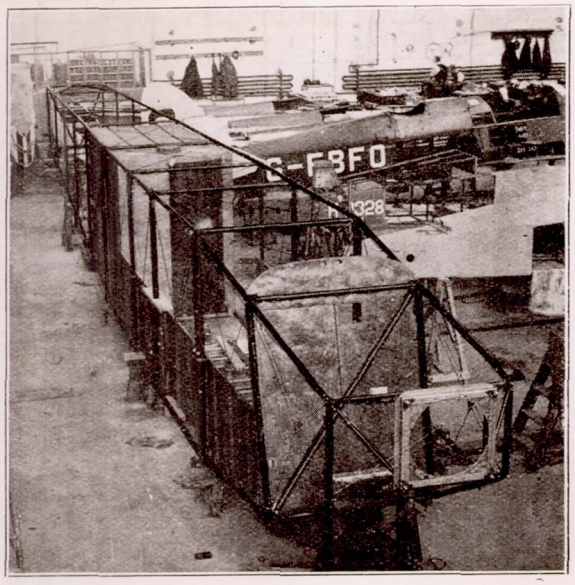

THE D.H. 66 : Three-quarter front view of the fuselage in skeleton. The main structure is of steel tube, and cabin, luggage compartment, etc., are in the form of " boxes " of three-ply, slipped into the main structure.

Fig. 1

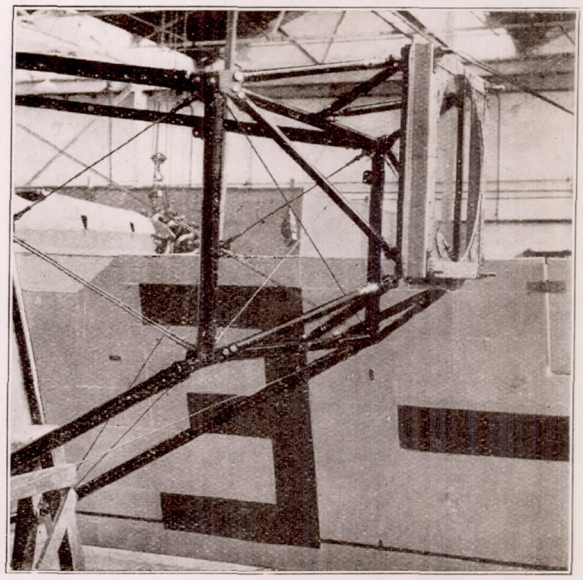

THE D.H. 66 : The mounting for the central engine is extremely neat and simple. The engine plate is made of Duralumin and is very light. Details of this mounting are illustrated by sketches.

Fig. 2

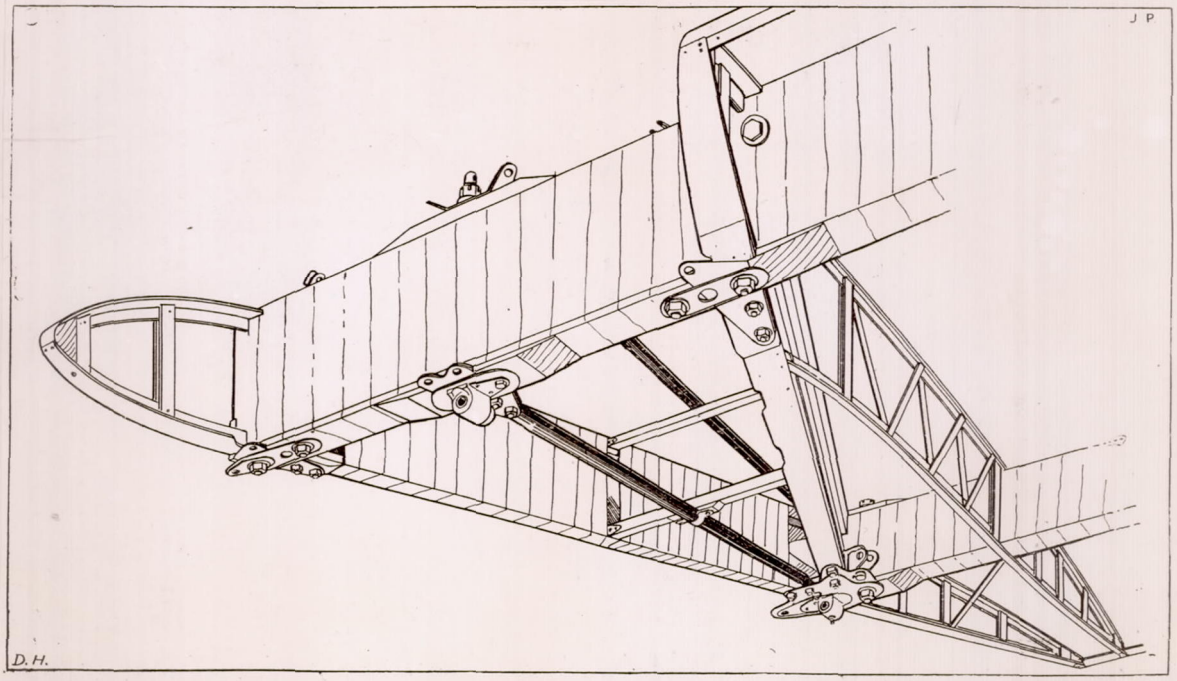

THE D.H. 66 : Sketch showing the triangulated structure in the lower plane, which carries one of the wing engines. The undercarriage struts are attached to the two fittings at front and rear ends of the longitudinal tube.

Fig. 3

1762 A.S.

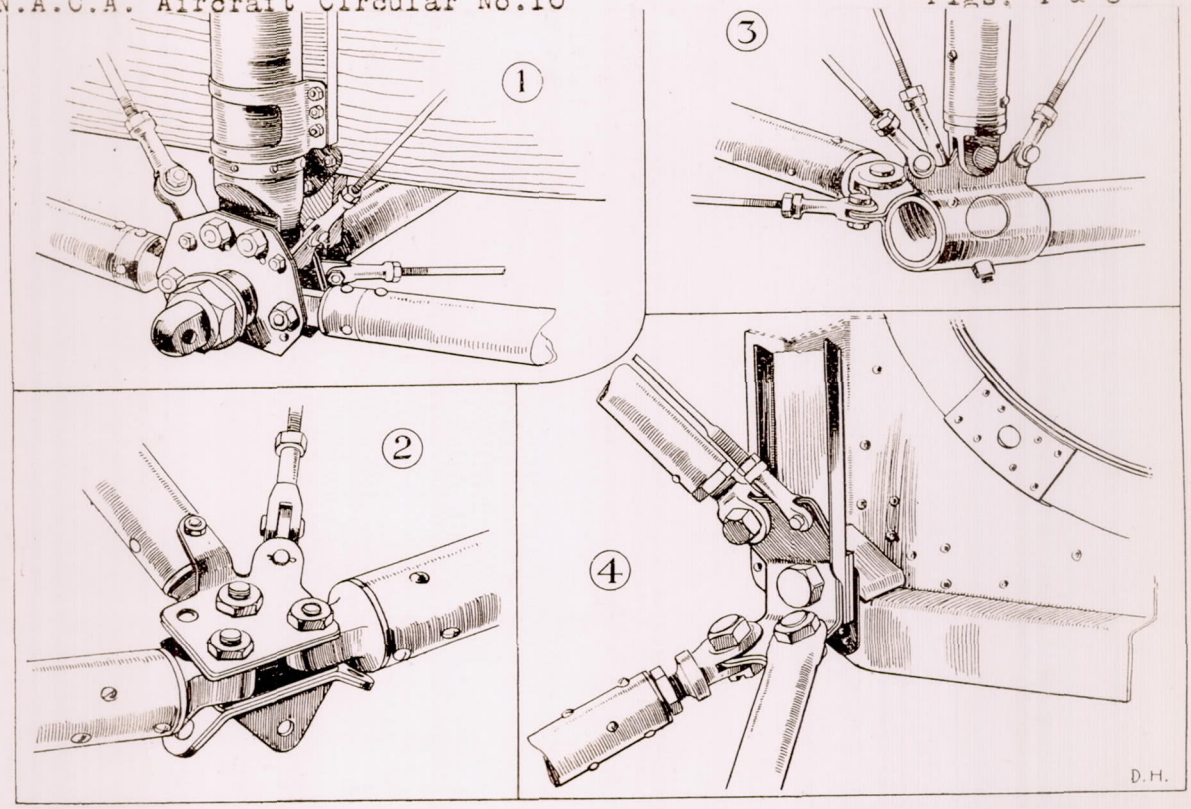

Fig. 4 Some constructional details. 1, shows the fuselage joint at the point where are attached the front spar of the lower wing and the inner end of the wheel axle. 2 is another fuselage joint slightly farther aft. This sketch was made from a fuselage side lying on trestles, and the sloping strut is actually vertical, while the wiring plates visible below the longeron belong to the cross-bracing of the floor panel of the bay. The joints in the rear portion of the fuselage are of the type illustrated in 3. All the steel tube struts and longerons have Duralumin ends, forked or plain, according to local requirements. Some details of the mounting of the nose engine are shown in 4. The engine plate itself is of Duralumin and is very light. It should be pointed out that the sketch is a rear view, and shows the back of the engine plate.

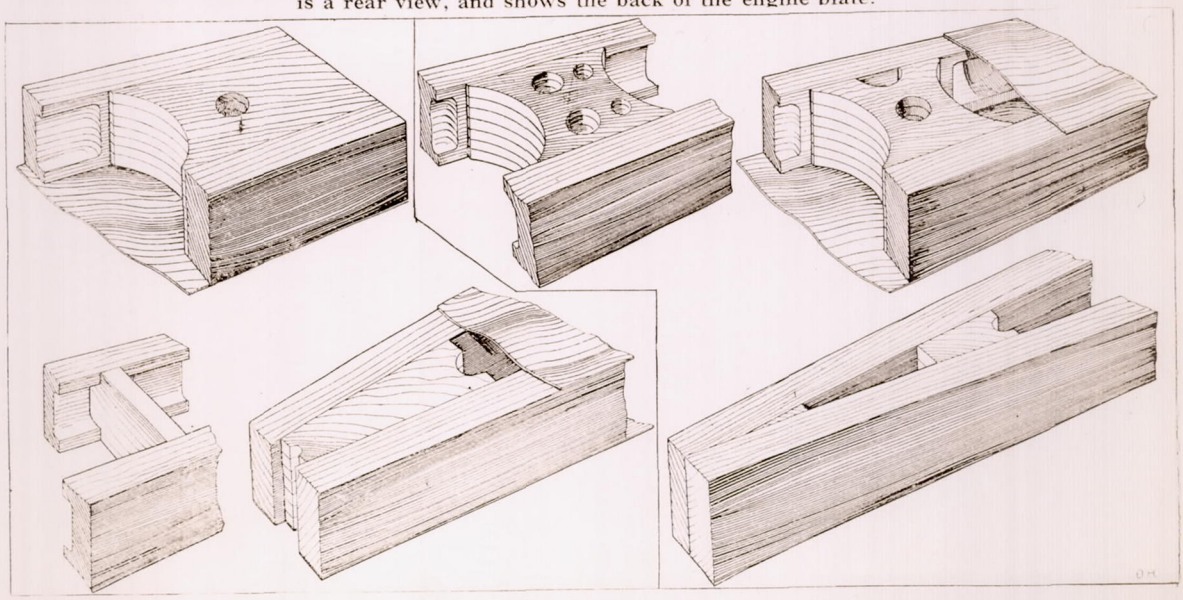

Fig. 6 Some spar details. On the left, the distance-pieces separating the spar flanges in the inner bay, and on the right, the same, but in a slightly different form, in the end sections of the wing. The spars are of spruce, spindled out as indicated, and the distance-pieces are of laminated spruce, while the spar walls are of three-ply.

1763 A.S.

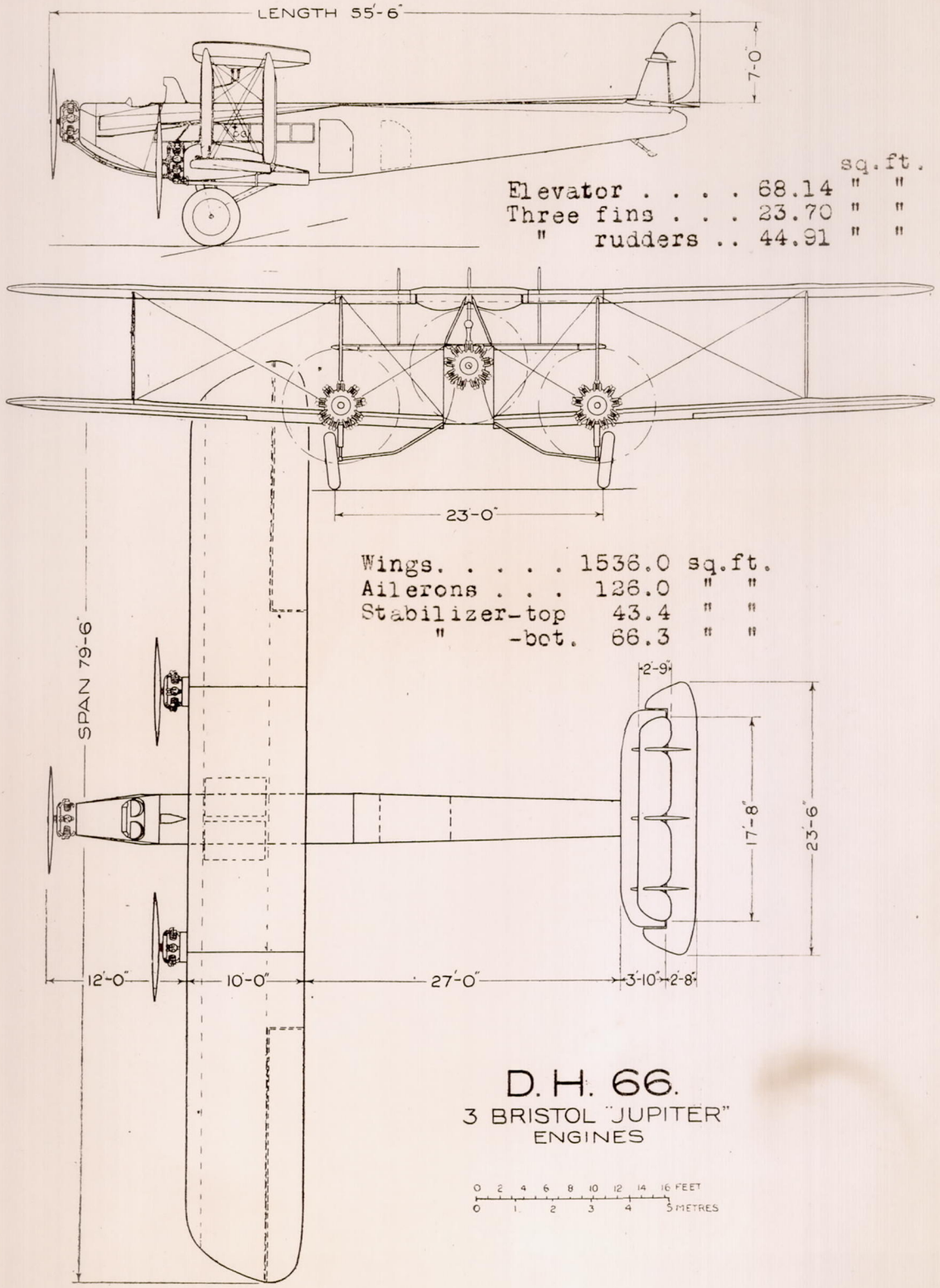

Fig.5 The D.H.66 Commercial airplane

1764 A.S.